EUCHNER

Operating Instructions

Transponder-Coded Safety Switch with Guard Locking for Process Protection

CTS-C2-BP/BR-CC-FLX

EN

Contents

1. About this document ... 4
1.1. Scope ... 4
1.2. Target group ... 4
1.3. Key to symbols ... 4
1.4. Supplementary documents ... 4
2. Correct use ... 5
3. Description of the safety function ... 7
4. Exclusion of liability and warranty ... 8
5. General safety precautions ... 8
6. Function ... 9
6.1. Monitoring of the guard locking for process protection ... 9
6.2. Monitoring outputs/status bits ... 9
6.2.1. Guard locking signal OL ... 9
6.2.2. Door position 1 signal OD ... 10
6.2.3. Door position 2 signal OT ... 10
6.2.4. Diagnostic signal OI ... 10
6.2.5. Escape release signal OER ... 10
6.2.6. Status signal OM ... 10
6.2.7. Locking element signal OLS ... 10
6.2.8. Communication connection C ... 10
6.3. Guard locking for process protection ... 10
6.4. Switching states ... 11
7. Manual release ... 12
7.1. Auxiliary release ... 12
7.1.1. Actuating auxiliary release ... 12
7.2. Escape release ... 13
7.2.1. Actuating escape release ... 13
8. Mounting ... 14
9. Electrical connection ... 17
9.1. Notes about cULus ... 18
9.2. Safety in case of faults ... 18
9.3. Fuse protection for power supply ... 18
9.4. Requirements for connecting cables ... 19
9.5. Connector assignment of safety switches CTS-...-VAB-... with plug connector 2 x M12 ... 19
9.6. Connector assignment of safety switches CTS-…-VSA-… with plug connector M12, 8-pin ... 20
9.7. Notes on operation with safe control systems ... 21
9.8. Connection without and with IO-Link communication ... 21
9.8.1. Connection without IO-Link communication ... 21
9.8.2. Connection with IO-Link communication ... 21

10. Connection of a single CTS-C2-BP/BR-CC-FLX (separate operation) 22

11. Connection of several devices in a chain (series connection) 23

11.1. Series connection with wiring in the control cabinet 23

11.2. Series connection with Y-distributors 23

11.2.1. Maximum cable lengths with BR switch chains 24

11.2.2. Determining cable lengths using the example table 24

11.2.3. Connector assignment of Y-distributor for series connection without IO-Link communication 25

11.2.4. Connector assignment of Y-distributor for series connection with IO-Link communication 27

12. Using communication data 28

12.1. Connection to a BR/IO-Link Gateway GWY-CB 28

12.2. Connection to a safety relay ESM-CB 28

12.3. Overview of the communication data 29

12.3.1. Cyclical data (process data) 29

12.3.2. Acyclical data (device data and events) 29

13. Setup 31

13.1. Configuring device and teaching-in actuator for the first time 31

13.2. Teaching-in new actuator (only for evaluation of the actuator with a high coding level) 32

13.3. Functional check 33

13.3.1. Mechanical function test 33

13.3.2. Electrical function test 33

14. Factory reset 34

15. Status and error messages 34

15.1. LED displays 34

15.2. Status messages 35

15.3. Error messages 36

15.4. Acknowledging error messages 37

16. Technical data 38

16.1. Technical data for safety switch CTS-C2-BP/BR-CC-FLX 38

16.1.1. Typical system times 39

16.2. Radio frequency approvals 40

16.3. Dimension drawing of safety switch CTS 41

16.4. Technical data for actuator A-FLX-D-0.-… 42

16.4.1. Dimension drawing for actuatorA-FLX-D-0.-… 42

17. Ordering information and accessories 43

18. Inspection and service 43

19. Service 43

20. Declaration of conformity 43

EN

1. About this document

1.1. Scope

These operating instructions apply to all CTS-C2-BP/BR-CC-FLX… of version V2.0.X. These operating instructions, the document *Safety information* and any available data sheet form the complete user information for your device.

1.2. Target group

Design engineers and installation planners for safety devices on machines, as well as setup and servicing staff possessing special expertise in handling safety components.

1.3. Key to symbols

Symbol/depiction	Meaning
→ L + HC	Monitoring the position of the guard locking and active monitoring of the guard locking for process protection, high coding level
→ L + LC	Monitoring the position of the guard locking and active monitoring of the guard locking for process protection, low coding level
→ I + HC	Monitoring the position of the guard locking and optional monitoring of the guard locking for process protection, high coding level
→ I + LC	Monitoring the position of the guard locking and optional monitoring of the guard locking for process protection, low coding level
	Printed document
www	Document is available for download at www.euchner.com
DANGER **WARNING** **CAUTION**	Safety precautions **Danger** of death or severe injuries **Warning** about possible injuries **Caution** slight injuries possible
NOTICE **Important!**	**Notice** about possible device damage **Important** information
Tip	Useful information

1.4. Supplementary documents

The overall documentation for this device consists of the following documents:

Document title (document number)	Contents	
Safety information (2525460)	Basic safety information	
Operating Instructions (MAN20001531)	(this document)	www
Declaration of conformity	Declaration of conformity	www
Possibly available data sheet	Item-specific information about deviations or additions	www

Important!

Always read all documents to gain a complete overview of safe installation, setup and use of the device. The documents can be downloaded from www.euchner.com. For this purpose enter the doc. no. in the search box.

2. Correct use

Safety switches series CTS-C2-BP/BR-CC-FLX are interlocking devices with guard locking solenoid (type 4) for process protection without safe guard locking monitoring. The device complies with the requirements according to EN IEC 60947-5-3.

The device can be configured with the aid of a function actuators. Depending on the function actuator taught-in, the monitoring of the guard locking for process protection is permanently active or available as an additional option and the evaluation of the actuator code has a high or low coding level.

Table 1: System components

Safety switch	Function actuator			
	Monitoring of the guard locking for process protection			
	Active	Optional	Active	Optional
	High coding level	High coding level	Low coding level	Low coding level
	→ L + HC	→ I + HC	→ L + LC	→ I + LC
CTS-C2-BP/BR-CC-FLX...	A-FLX-D-0C-167919	A-FLX-D-0D-169044	A-FLX-D-0E-169045	A-FLX-D-0F-169046

→ L + ...

If monitoring of the guard locking for process protection is active, the following applies:

In combination with a movable guard and the machine control, this safety component prevents dangerous machine functions from occurring while the guard is open. A stop command is triggered if the guard is opened during the dangerous machine function or the guard locking is unlocked.

This means:

- Starting commands that cause a dangerous machine function must become active only when the guard is closed and locked.
- Opening the guard must trigger a stop command.
- Closing and locking a guard must not cause automatic starting of a dangerous machine function. A separate start command must be issued. For exceptions, refer to EN ISO 12100 or relevant C-standards.

→ I + ...

If monitoring of the guard locking for process protection is optional, the following applies:

In combination with a movable guard and the machine control, this safety component prevents dangerous machine functions from occurring while the guard is open. A stop command is triggered if the guard is opened during the dangerous machine function.

This means:

- Starting commands that cause a dangerous machine function must become active only when the guard is closed.
- Opening the guard must trigger a stop command.
- Closing a guard must not cause automatic starting of a dangerous machine function. A separate start command must be issued. For exceptions, refer to EN ISO 12100 or relevant C-standards.

→ ...+ HC

If the evaluation of the actuator code has a high coding level, the following applies:

- The actuator must be assigned to the safety switch by a teach-in operation so that it is detected by the system. This unambiguous assignment ensures a particularly high level of protection against tampering. The system thus possesses a high coding level.

→ ...+ LC

If the evaluation of the actuator code has a low coding level, the following applies:

- With the low coding level a specific code is not requested but instead it is only checked whether the actuator is of a type that can be detected by the system. There is no exact comparison of the actuator code with the taught-in code in the safety switch. The system possesses a low coding level.

EN

Before the device is used, a risk assessment must be performed on the machine, e.g. according to the following standards:

- EN ISO 13849-1
- EN ISO 12100
- IEC 62061

Correct use includes observing the relevant requirements for installation and operation, particularly based on the following standards:

- EN ISO 13849-1
- EN ISO 14119
- EN 60204-1

The safety switch is allowed to be operated only in conjunction with the intended EUCHNER actuators and the related connection components from EUCHNER. On the use of different actuators or other connection components, EUCHNER provides no warranty for safe function.

Safety switches in the version CTS-…-BR can be integrated into a BR device chain. Connection of several devices in a BR switch chain is permitted only using devices intended for series connection in a BR switch chain. Check this in the specifications of the device in question.

Important!

- The user is responsible for the proper integration of the device into a safe overall system. For this purpose, the overall system must be validated, e.g. according to EN ISO 13849-2.
- It is only allowed to use components that are permissible according to the *Table 1: System components*.

3. Description of the safety function

Devices from this series feature the following safety functions:

Monitoring of the guard position
(interlocking device according to EN ISO 14119)

- Safety function: the safety outputs are switched off when the guard is open (see chapter *6. Function on page 9*).
- Safety characteristics: category, Performance Level, PFH_D (see chapter *16. Technical data on page 38*).

The following additionally applies in a BR series connection:

- The safety outputs are switched on only when the device receives a corresponding signal from its predecessor in the chain.

NOTICE

You can regard the complete BR device chain as one subsystem during calculation. The following calculation method applies to the PFH_D value:

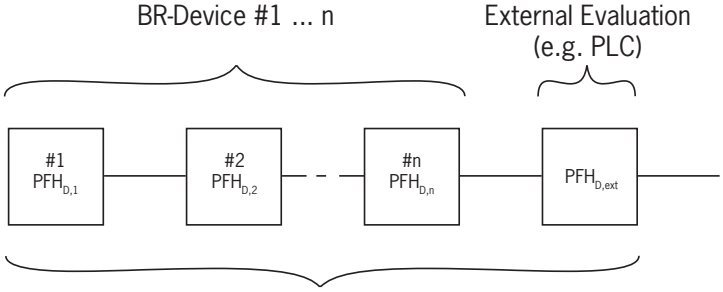

$$PFH_D \text{ ges} = \sum_{k=1}^{n} PFH_{D,k} + PFH_{d,ext}$$

Alternatively, the simplified method according to section 6.3 of EN 13849-1:2015 can be used for calculation.

EN

4. Exclusion of liability and warranty

In case of failure to comply with the conditions for correct use stated above, or if the safety regulations are not followed, or if any servicing is not performed as required, liability will be excluded and the warranty void.

5. General safety precautions

Safety switches fulfill personnel protection functions. Incorrect installation or tampering can lead to fatal injuries to personnel.

Check the safe function of the safeguard particularly

- after any setup work
- after the replacement of a system component
- after an extended period without use
- after every fault
- after any reconfiguration of the device

Independent of these checks, the safe function of the safeguard should be checked at suitable intervals as part of the maintenance schedule.

WARNING

Danger to life due to improper installation or due to bypassing (tampering). Safety components fulfill a personnel protection function.

- Safety components must not be bypassed, turned away, removed or otherwise rendered ineffective. On this topic pay attention in particular to the measures for reducing the possibility of bypassing according to EN ISO 14119:2013, section 7.
- The switching operation must be triggered only by actuators designated for this purpose.
- Prevent bypassing by means of replacement actuators (only for low coding level evaluation). For this purpose, restrict access to actuators and to keys for releases, for example.
- Make sure the guard cannot be closed unintentionally, e.g. during servicing. For this purpose, a lockout bar can be used, for instance.
- Mounting, electrical connection and setup only by authorized personnel possessing the following knowledge:
  - specialist knowledge in handling safety components
  - knowledge about the applicable EMC regulations
  - knowledge about the applicable regulations on operational safety and accident prevention.

NOTICE

Risk of damage

- The guard locking function can no longer be ensured if an actuator is broken. Opening the door will immediately switch off the safety outputs. Regularly check the actuator for mechanical damage.

Important!

Prior to use, read the operating instructions and keep these in a safe place. Ensure the operating instructions are always available during mounting, setup and servicing. You can download the operating instructions from www.euchner.com.

6. Function

The device monitors the position of movable guards.

The system consists of the following components: coded actuator (transponder) and switch.

The coding level of the system depends on the configuration of the device (see chapter *13.1. Configuring device and teaching-in actuator for the first time on page 31*).

When the guard is closed, the actuator is moved into the safety switch. When the operating distances are reached, power is supplied to the actuator by the switch and data are transferred.

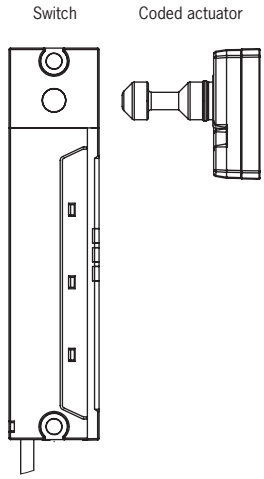

The door position 1 signal OD is set if a permissible code is detected. Guard locking is activated automatically if power is present at the guard locking solenoid. The switching conditions for the safety outputs are dependent on the configuration of the monitoring of the guard locking for process protection (see chapter *6.4. Switching states on page 11)*.

If there is a fault in the safety switch, the safety outputs are switched off and the DIA LED illuminates or flashes red (see chapter *15.3. Error messages on page 36*). The occurrence of faults is detected at the latest on the next demand to close the safety outputs (e.g. on starting).

6.1. Monitoring of the guard locking for process protection

The device is configured with the aid of the function actuator. Depending on the function actuator taught-in, the monitoring of the guard locking for process protection is permanently active or available as an additional option. Further information about the possible settings is available in the chapter *13.1. Configuring device and teaching-in actuator for the first time on page 31*.

If monitoring of the guard locking for process protection is active, the following applies:

→ L + ...

All versions feature two safe outputs for monitoring the guard locking for process protection. The safety outputs FO1A and FO1B are switched off and the guard locking signal OL is cleared when guard locking is released.

If monitoring of the guard locking for process protection is optional, the following applies:

→ I + ...

All versions feature two safe outputs for monitoring the door position as well as the status signal OL for monitoring the guard locking for process protection; this signal can be evaluated optionally. The safety outputs FO1A and FO1B are switched off and the door position 1 signal OD is cleared when the guard is opened.

The following switching conditions apply to the safety outputs FO1A and FO1B:

	Monitoring of the guard locking for process protection	
	Active (ON)	**Optional (OFF)**
No fault in the device	TRUE (ON)	TRUE (ON)
Guard closed	TRUE (ON)	TRUE (ON)
Guard locking active	TRUE (ON)	irrelevant

EN

6.2. Monitoring outputs/status bits

Depending on version, the signals listed in the following are available as a status bit or at the monitoring output. The status bits are evaluated via the BR/IO-Link Gateway. Please refer to the corresponding data sheet for further information.

6.2.1. Guard locking signal OL

The guard locking signal is present if the guard locking is active.

6.2.2. Door position 1 signal OD

The door position 1 signal is sent as soon as the actuator is inserted into the switch head (state: guard closed and not locked). The signal is also present if the guard locking is active.

6.2.3. Door position 2 signal OT

The door position 2 signal is present if the actuator is completely inserted in the switch head and the guard locking can be activated. In normal ambient conditions, the signal OT is sent after the signal OD as an additional door monitoring contact. The signal is also present if the guard locking is active (see chapter *6.4. Switching states on page 11).*

6.2.4. Diagnostic signal OI

The diagnostic signal is present if there is an error (switch-on condition as for DIA LED).

6.2.5. Escape release signal OER

The escape release signal is present if the device has been released manually (see chapter *7. Manual release on page 12*). The signal is reset if the guard locking is re-activated or a reset has been undertaken.

6.2.6. Status signal OM

The status signal is present if the device's safety outputs are switched.

6.2.7. Locking element signal OLS

The locking element signal is present if the locking element is stuck and it is therefore not possible to activate/deactivate guard locking. The signal is reset as soon as the actuator is no longer under tensile stress or the locking element is no longer jammed.

6.2.8. Communication connection C

A monitoring output with the suffix C has the additional function of providing a communication connection to a BR/IO-Link Gateway. The switch delivers cyclical and acyclical data. You will find an overview of the communication data in chapter *12. Using communication data on page 28*.

If no BR/IO-Link Gateway is connected, this output behaves like a monitoring output.

6.3. Guard locking for process protection

(guard locking actuated by power-ON and released by spring force)

ⓘ	**Important!** Malfunctions due to incorrect use. ‣ The actuator must not be under tensile stress during release. ‣ The guard locking is only activated if, in addition to the power at the guard locking solenoid, the operating voltage is applied to the device.

The magnetically actuated guard locking operates according to the open-circuit current principle. If the voltage is interrupted at the solenoid, the guard locking is released and the guard can be opened directly.

The guard can be opened as long as no power is applied to the guard locking solenoid or there is no operating voltage at the device.

If power is applied to the guard locking solenoid and the actuator is completely inserted, the guard locking pin is held in the extended position and the guard is locked.

Activating guard locking: close guard; apply power to the solenoid and operating voltage.

Releasing guard locking: disconnect power from the solenoid or operating voltage.

6.4. Switching states

The detailed switching states for your switch can be found in chapter *15. Status and error messages on page 34*. All safety outputs, signals and display LEDs are described there.

	Guard closed and locked	**Guard closed and not locked, ready for locking**		**Guard closed and not locked**		**Guard open**
	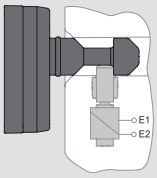	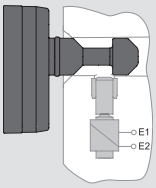		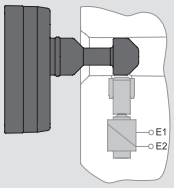		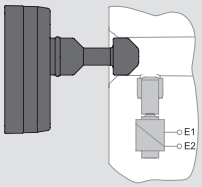
Power at the guard locking solenoid	on	off		off		irrelevant
Safety outputs FO1A and FO1B	on	off → L + ...	on → I + ...	off → L + ...	on → I + ...	off
Guard locking signal OL	on	off		off		off
Door position 1 signal OD	on	on		on		off
Door position 2 signal OT	on	on		off		off

EN

7. Manual release

Some situations require the guard locking to be released manually (e.g. malfunctions or an emergency). A function test must be performed after release.

More information on this topic can be found in the standard EN ISO 14119:2013, section 5.7.5.1. The device can feature the following release functions:

7.1. Auxiliary release

If malfunctions occur, the guard locking can be released with the auxiliary release irrespective of the state of the solenoid.

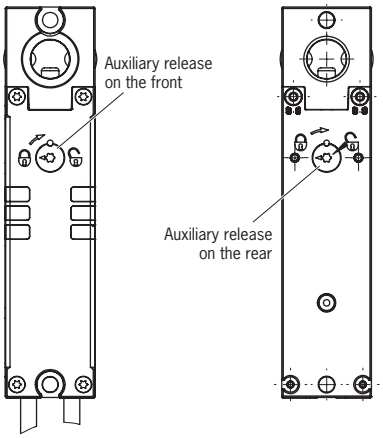

Important!

- The actuator must not be under tensile stress during manual release.
- To prevent tampering, the auxiliary release must be sealed with sealing lacquer, for example, before the switch is set up.
- Loss of the release function due to mounting errors or damage during mounting.
- Check the release function every time after mounting.
- The auxiliary release is not a safety function.
- The correct function must be checked at regular intervals.
- Observe the notes on any available data sheets.

7.1.1. Actuating auxiliary release

1. Remove seal or make a hole.
2. Using a screwdriver, turn the auxiliary release to 🔓 in the direction of the arrow.

➡ If the guard locking was activated, it is unlocked.

→ L + ...

If monitoring of the guard locking for process protection is active, the following applies:

➡ The guard locking signal OL and the safety outputs are switched off.

➡ The STATE LED flashes alternately white/orange slowly.

➡ The LOCK LED flashes orange slowly.

→ I + ...

If monitoring of the guard locking for process protection is optional, the following applies:

➡ The guard locking signal OL is switched off.

➡ The STATE LED flashes alternately white/orange slowly.

➡ The LOCK LED flashes orange slowly.

3. Using a screwdriver, turn the auxiliary release to 🔒 in the opposite direction to the arrow to reset.
4. Seal with sealing lacquer.
5. Close the guard.

➡ The device operates normally again.

6. Check correct function of the device.

7.2. Escape release

The escape release can be retrofitted.

The escape release permits opening of a locked guard from the danger zone without tools (see chapter *16.3. Dimension drawing of safety switch CTS on page 41*).

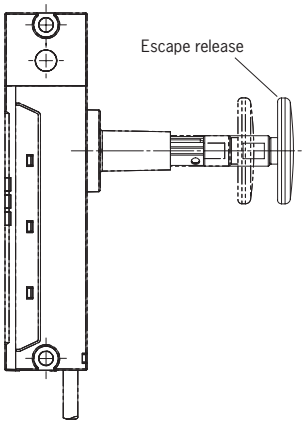

Important!

- It must be possible to actuate the escape release manually from inside the protected area without tools.
- It must not be possible to reach the escape release from the outside.
- The actuator must not be under tensile stress during manual release.
- The escape release meets the requirements of Category B according to EN ISO 13849-1:2015.

7.2.1. Actuating escape release

1. Press the red release knob to the end stop.

➡ If the guard locking was activated, it is unlocked.

→ L + ...

If monitoring of the guard locking for process protection is active, the following applies:

➡ The guard locking signal OL and the safety outputs are switched off.

➡ The STATE LED flashes alternately white/orange slowly.

➡ The LOCK LED flashes orange slowly.

→ I + ...

If monitoring of the guard locking for process protection is optional, the following applies:

➡ The guard locking signal OL is switched off.

➡ The STATE LED flashes alternately white/orange slowly.

➡ The LOCK LED flashes orange slowly.

2. Pull out the escape release knob to reset the escape release.
3. Close the guard.

➡ The device operates normally again.

4. Check correct function of the device.

EN

8. Mounting

CAUTION

Safety switches must not be bypassed (bridging of contacts), turned away, removed or otherwise rendered ineffective.

- Observe EN ISO 14119:2013, section 7, for information about reducing the possibilities for bypassing an interlocking device.

NOTICE

Risk of damage to equipment and malfunctions as a result of incorrect installation.

- Safety switches and actuators must not be used as an end stop.
- Observe EN ISO 14119:2014, sections 5.2 and 5.3, for information about mounting the safety switch and the actuator. The following specifications must be observed:
  - Mounting with screws of property class 8.8 or higher.
  - The minimum screw diameter is 5 mm.
  - Secure the fixing material against loosening (e.g. by means of medium-strength positive screw locking).
- Protect the switch against damage, as well as against penetrating foreign objects such as swarf, sand and blasting shot, etc.
- Observe the min. door radii (see chapter *16.4.1. Dimension drawing for actuatorA-FLX-D-0.-… on page 42*).
- Observe the maximum permissible inclination angles between switch and actuator (see *Fig. 4*).
- Observe the tightening torque for fastening the switch and the actuator (see *Fig. 3*):
  - Actuator: 6 Nm
  - Switch head: 6 Nm
  - Switch housing: 3 Nm
- The side of the switch in contact and the rear of the actuator must lie fully on the mounting surface.
- Actuator and safety switch must be mounted such that the actuator is perpendicularly and completely inserted into the switch when the guard is closed (see*Fig. 2*). The guard locking function is not assured if installation is incorrect.

If monitoring of the guard locking for process protection is optional, the following applies:

Important!

- From the assured release distance S_{ar}, the safety outputs are safely shut down. To achieve the assured release distance S_{ar} the actuator must be pulled completely out of the switch head.
- To achieve the assured operating distance S_{ao} the actuator must be inserted completely into the switch head.

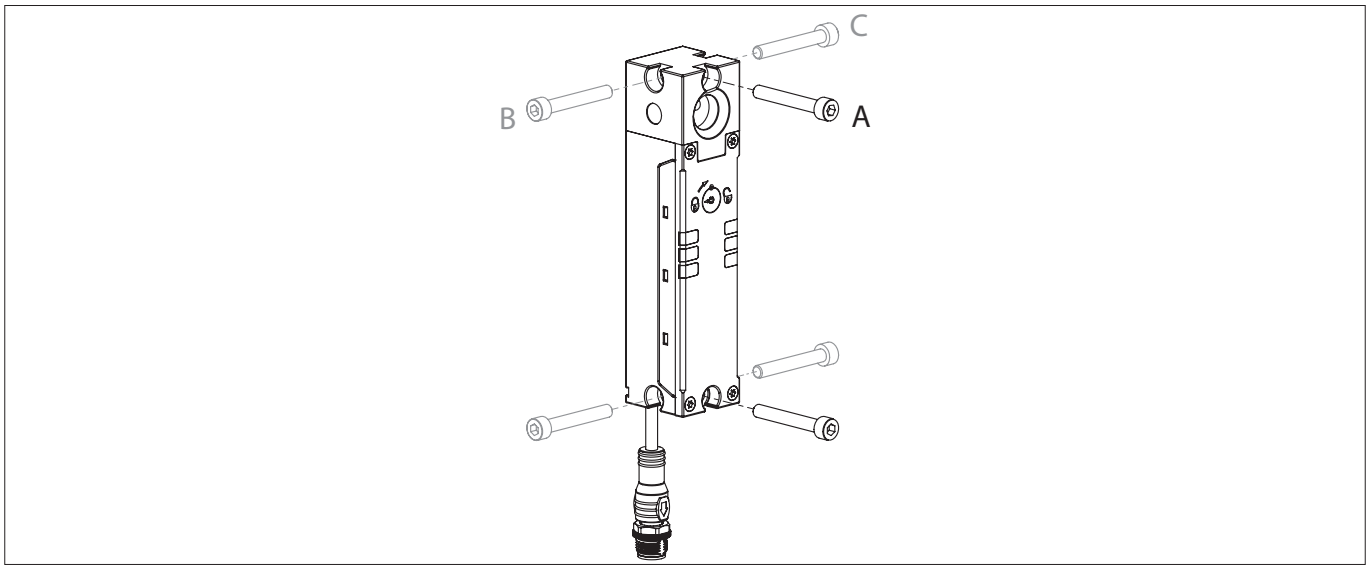

Fig. 1: Front (A) and side (B, C) mounting

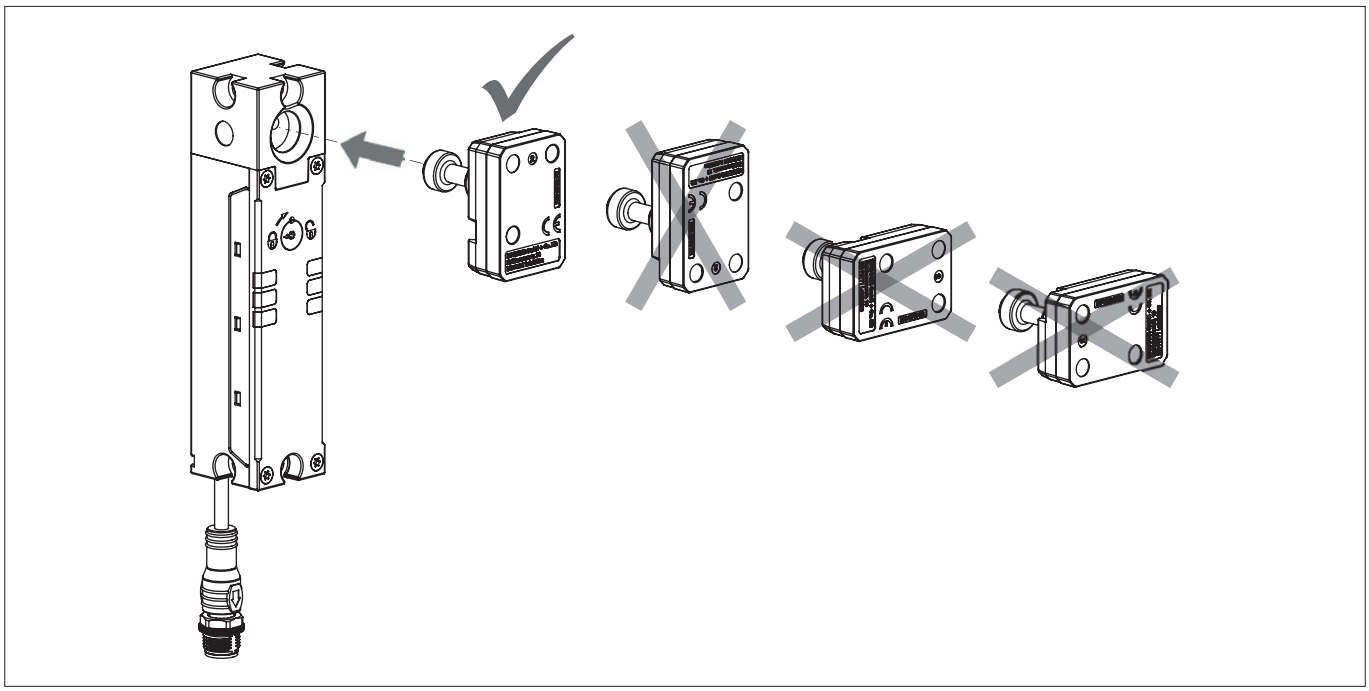

Fig. 2: Actuator alignment

EN

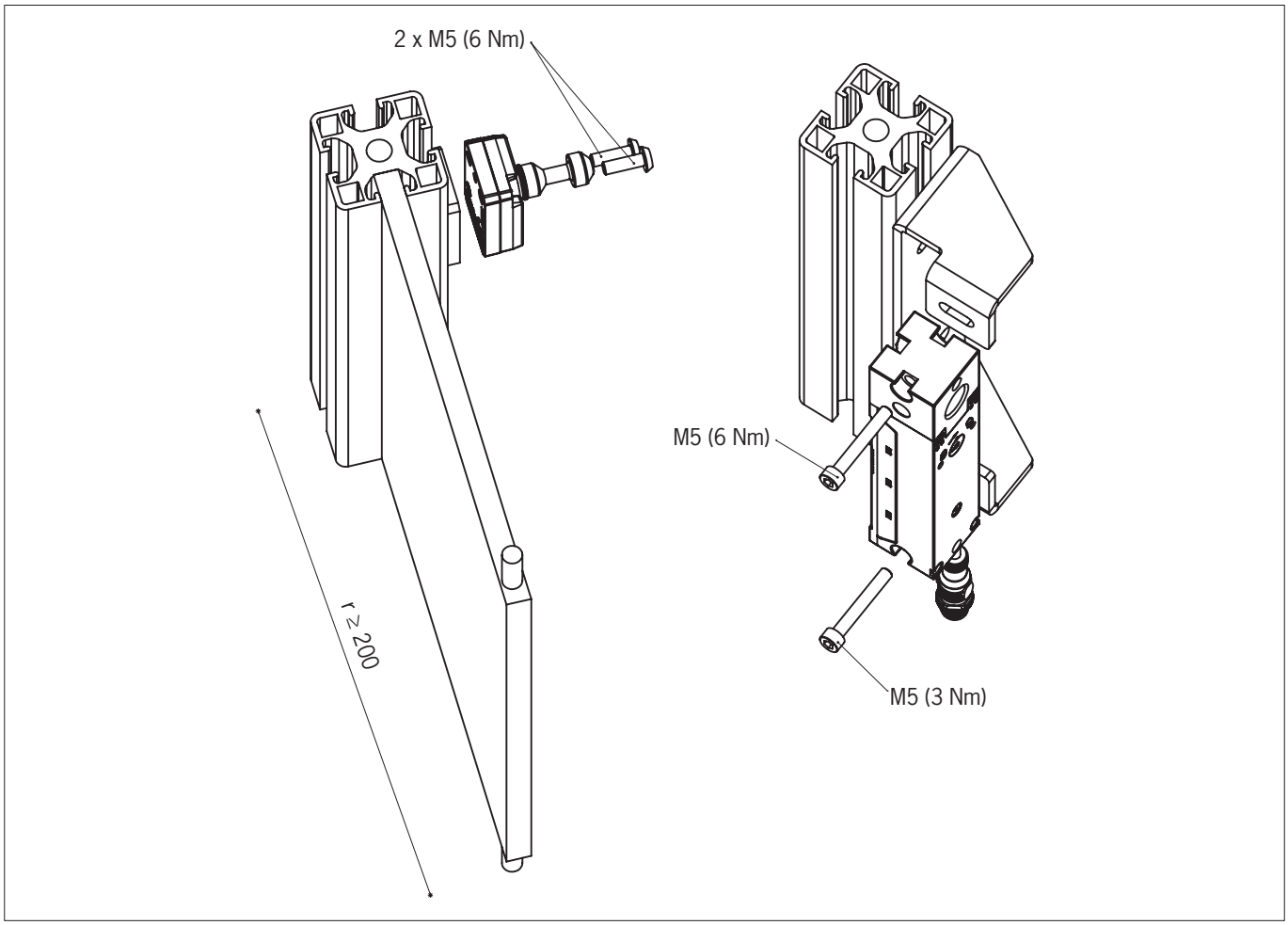

Fig. 3: Installation example

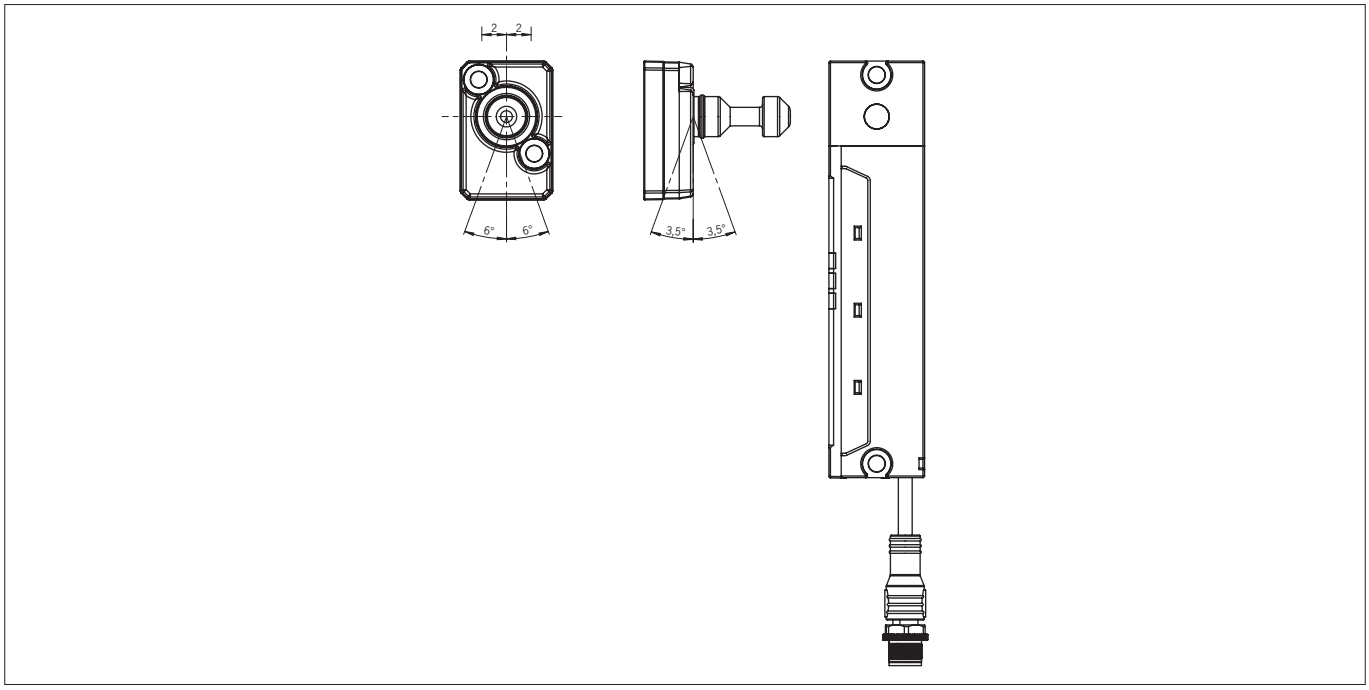

Fig. 4: Maximum center offset and maximum actuator deflection

9. Electrical connection

The following connection options are available:

- Separate operation
- Series connection with wiring in the control cabinet
- Series connection with Y-distributors
- Connection without IO-Link communication
- Connection with IO-Link communication

WARNING

In the event of a fault, loss of the safety function due to incorrect connection.

- To ensure safety, both safety outputs must always be evaluated.
- Monitoring outputs must not be used as safety outputs.
- Lay the connecting cables with protection to prevent short circuits.

CAUTION

Risk of damage to equipment or malfunctions as a result of incorrect connection.

- Do not use a control system with pulsing or switch off the pulsing function in your control system. The device generates its own test pulses on the safety outputs. A downstream control system must tolerate these test pulses, which may have a length of up to 300 µs. Depending on the inertia of the downstream device (control system, relay, etc.), this can lead to short switching processes. The test pulses are output only with the safety outputs switched off during device start.
- The inputs on a connected evaluation unit must be positive switching, as the two outputs on the safety switch deliver a level of +24 V in the switched-on state.
- All the electrical connections must either be isolated from the mains supply by a safety transformer according to IEC 61558-2-6 with limited output voltage in the event of a fault, or by other equivalent insulation measures (SELV).
- All electrical outputs must have an adequate protective circuit for inductive loads. The outputs must be protected with a free-wheeling diode for this purpose. RC interference suppression units must not be used.
- Power devices which are a powerful source of interference must be installed in a separate location away from the input and output circuits for signal processing. The cable routing for safety circuits should be as far away as possible from the cables of the power circuits.
- To prevent EMC interference, the physical environmental and operating conditions at the installation site of the device must comply with the requirements according to the standard EN 60204-1 (EMC).
- Pay attention to any interference fields from devices such as frequency converters or induction heating systems. Observe the EMC instructions in the manuals from the respective manufacturer.
- If the solenoid is operated with a frequency of more than 0.2 Hz, the device may react with a delay.
- In devices with IMP/IMM inputs, the power supply for the evaluation electronics is separate from the power supply for the guard locking solenoid.
  If different power supplies are used, they must have the same reference potential.
- For device variants with two connecting cables, both cables must be laid in the same cable duct.

Important!

If the device does not appear to function when the operating voltage is applied (e.g. STATE LED does not flash), the safety switch must be returned to the manufacturer.

EN

9.1. Notes about c UL us

Important!

- This device is intended to be used with a Class 2 power source in accordance to UL1310.
  As an alternative an LV/C (Limited Voltage/Current) power source with the following properties can be used:
  This device shall be used with a suitable isolating source in conjunction with a fuse in accordance to UL248. The fuse shall be rated max. 3.3 A and be installed in the max. 30 V DC power supply to the device in order to limit the available current to comply with the UL requirements. Please note possibly lower connection ratings for your device (refer to the technical data).
- For use and application as per the requirements of UL [1] a connecting cable listed under the UL category code CYJV/7, min. 24 AWG, min. 80 °C, must be used.

1) Note on the scope of the UL approval: the devices have been tested as per the requirements of UL508 and CSA/ C22.2 no. 14 (protection against electric shock and fire).

9.2. Safety in case of faults

- The operating voltage UB and the solenoid operating voltage U_{IMP} are reverse polarity protected.
- The safety outputs FO1A/FO1B are short circuit-proof.
- A short circuit between the safety outputs is detected on starting or when the safety outputs are activated by the device.
- A short circuit in the cable can be excluded by laying the cable with protection.

9.3. Fuse protection for power supply

The power supply must be provided with fuse protection depending on the number of switches and the current required for the outputs. The following rules apply:

Max. current consumption of an individual switch I_{max}

$I_{max\ UB}$ = $I_{UB_1} + I_{FO1A+FO1B} + I_{OX1} + I_{OX2}$

I_{UB_1} = Switch operating current (max. 50 mA)

I_{OX} = Load current of monitoring output (max. 20 mA per monitoring output)

$I_{FO1A+FO1B}$ = Load current of safety outputs FO1A + FO1B (2 x max. 80 mA)

$I_{max\ IMP}$ = Solenoid operating current (max. 500 mA)

Max. current consumption of a switch chain Σ $I_{max\ UB}$

$\Sigma\ I_{max\ UB}$ = $I_{FO1A+FO1B} + n \times (I_{UB_2} + I_{OX1} + I_{OX2})$

n = Number of connected switches

I_{UB_2} = Switch operating current (max. 80 mA)

Important!

If there are further monitoring outputs, their load current must be taken into account.

9.4. Requirements for connecting cables

CAUTION

Risk of damage to equipment or malfunctions as a result of incorrect connecting cables.

- Use connection components and connecting cables from EUCHNER.
- On the use of other connection components, the requirements in the following table apply. EUCHNER provides no warranty for safe function in case of failure to comply with these requirements.

Observe the following requirements with respect to the connecting cables:

For safety switches CTS-...-VAB-... with plug connector 2 x M12

Parameter	Value	Unit
Conductor cross-section, min.	0.25	mm^2
R max.	80	Ω/km
C max.	120	nF/km
L max.	0.65	mH/km
Recommended cable type	LIYY 8 x 0.25 mm^2 or 5 x 0.34 mm^2	

For safety switches CTS-...-VSA-... with plug connector M12, 8-pin

Parameter	Value	Unit
Conductor cross-section, min.	0.25	mm^2
R max.	80	Ω/km
C max.	120	nF/km
L max.	0.65	mH/km
Recommended cable type	LIYY 8 x 0.34 mm^2	

9.5. Connector assignment of safety switches CTS-...-VAB-... with plug connector 2 x M12

Plug connector (view of connection side)	Pin	Designation	Function	Conductor coloring of connecting cable 1)
2 x M12 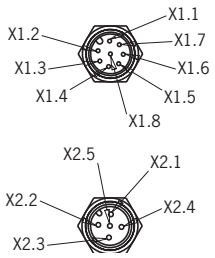	X1.1	FI1B	Enable input, channel B	WH
	X1.2	UB	Electronics operating voltage, 24 V DC	BN
	X1.3	FO1A	Safety output, channel A **Active monitoring of the guard locking for process protection**: ON, if door is closed and locked. **Optional monitoring of the guard locking for process protection**: ON, if door is closed.	GN
	X1.4	FO1B	Safety output, channel B **Active monitoring of the guard locking for process protection**: ON, if door is closed and locked. **Optional monitoring of the guard locking for process protection**: ON, if door is closed.	YE
	X1.5	OX1 2)	Door monitoring output 1	GY
	X1.6	FI1A	Enable input, channel A	PK
	X1.7	0VUB	Electronics operating voltage, 0 V DC	BU
	X1.8	-	n.c.	RD
	X2.1	IMM	Solenoid operating voltage, 0 V DC	BN
	X2.2	OX2 2)	Door monitoring output 2	WH
	X2.3	-	n.c.	BU
	X2.4	IMP	Solenoid operating voltage, 24 V DC	BK
	X2.5	-	n.c.	GY

1) Only for standard EUCHNER connecting cable
2) The function of the monitoring output OX is determined by the actuator taught-in. You will find more detailed information in the data sheet 2153710 or at www.euchner.com.

EN

9.6. Connector assignment of safety switches CTS-…-VSA-… with plug connector M12, 8-pin

Plug connector (view of connection side)	Pin	Designation	Function	Conductor coloring of connecting cable 1)
1 x M12 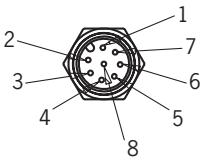	1	IMP	Solenoid operating voltage, 24 V DC	WH
	2	UB	Electronics operating voltage, 24 V DC	BN
	3	FO1A	Safety output, channel A **Active monitoring of the guard locking for process protection**: ON, if door is closed and locked. **Optional monitoring of the guard locking for process protection**: ON, if door is closed.	GN
	4	FO1B	Safety output, channel B **Active monitoring of the guard locking for process protection**: ON, if door is closed and locked. **Optional monitoring of the guard locking for process protection**: ON, if door is closed.	YE
	5	OX1 2)	Door monitoring output 1	GY
	6	OX2 2)	Door monitoring output 2	PK
	7	0VUB	Electronics operating voltage, 0 V DC	BU
	8	IMM	Solenoid operating voltage, 0 V DC	RD

1) Only for standard EUCHNER connecting cable
2) The function of the monitoring output OX is determined by the actuator taught-in. You will find more detailed information in the data sheet 2153710 or at www.euchner.com.

9.7. Notes on operation with safe control systems

Observe the following guidelines for connection to safe control systems:

- Use a common power supply for the control system and the connected safety switches.
- A pulsed power supply must not be used for U_B. Tap the supply voltage directly from the power supply unit. If the power supply is connected to a terminal of a safe control system, this output must provide sufficient electrical current.
- The safety outputs FO1A and FO1B can be connected to the safe inputs of a control system. Prerequisite: the input must be suitable for pulsed safety signals (OSSD signals, e.g. from light grids). The control system must tolerate test pulses on the input signals. This normally can be set up by parameter assignment in the control system. Observe the notes of the control system manufacturer. For the test pulse duration of your safety switch, refer to chapter *16. Technical data on page 38*.
- With series connection: always connect inputs FI1A and FI1B directly to a power supply unit or to outputs FO1A and FO1B of another EUCHNER BR device. Pulsed signals must not be present at inputs FI1A and FI1B.

A detailed example of connecting and setting the parameters of the control system is available for many devices at www.euchner.com, in the area *Downloads/Applications/CTS*. The features of the respective device are dealt with there in greater detail.

9.8. Connection without and with IO-Link communication

9.8.1. Connection without IO-Link communication

Only the safety and monitoring outputs are switched with this connection method.

With a series connection, the safety signals are looped through from device to device.

9.8.2. Connection with IO-Link communication

If, in addition to the safety function, detailed monitoring and diagnostic data are to be processed, a BR/IO-Link Gateway is required. To poll the communication data from the connected device, communication connection C is routed to the BR/IO-Link Gateway.

You will find further information in the operating instructions for your BR/IO-Link Gateway.

EN

10. Connection of a single CTS-C2-BP/BR-CC-FLX (separate operation)

WARNING

In the event of a fault, loss of the safety function due to incorrect connection.

- To ensure safety, both safety outputs FO1A and FO1B must always be evaluated.

Important!

The example shows only an excerpt that is relevant for the connection of the CTS system. The example illustrated here does not show complete system planning. The user is responsible for safe integration into the overall system. Detailed application examples can be found at www.euchner.com. Simply enter the order number of your switch in the search box. You will find all available connection examples for the device in *Downloads*.

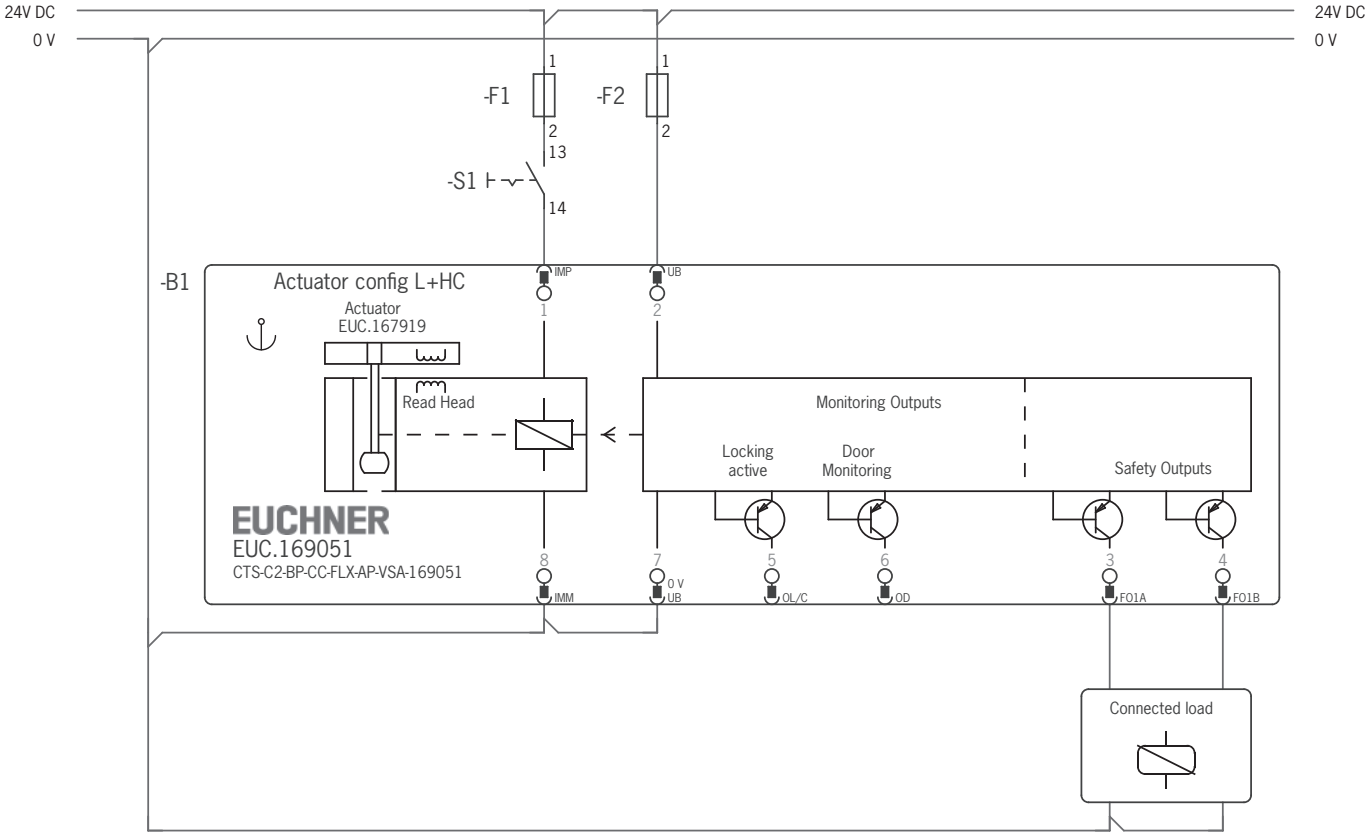

Fig. 5: Connection example, separate operation

11. Connection of several devices in a chain (series connection)

WARNING

In the event of a fault, loss of the safety function due to incorrect connection.

- To ensure safety, both safety outputs FO1A and FO1B must always be evaluated.

Important!

- A BR chain may contain a maximum of 20 safety switches.
- The BR chain is not permitted to be changed during operation.
- The example shows only an excerpt that is relevant for the connection of the CTS system. The example illustrated here does not show complete system planning. The user is responsible for safe integration into the overall system. Detailed application examples can be found at www.euchner.com. Simply enter the order number of your switch in the search box. You will find all available connection examples for the device in *Downloads*.
- Make sure you use the correct Y-distributors. See chapter *11.2.3. Connector assignment of Y-distributor for series connection without IO-Link communication on page 25 and chapter 11.2.4. Connector assignment of Y-distributor for series connection with IO-Link communication on page 27.*

11.1. Series connection with wiring in the control cabinet

The series connection can be realized via additional terminals in a control cabinet.

Important!

In case of series connection with IO-Link communication:

- The safety outputs are permanently assigned to the respective safety inputs of the downstream switch. FO1A must be routed to FI1A and FO1B to FI1B.
- If the connections are interchanged (e.g. FO1A to FI1B), the downstream device will enter the fault state.

11.2. Series connection with Y-distributors

The series connection is shown here based on the example of the version with plug connector M12. The switches are connected one behind the other with the aid of pre-assembled connecting cables and Y-distributors. If a safety door is opened or if a fault occurs on one of the switches, the system shuts down the machine.

EN

11.2.1. Maximum cable lengths with BR switch chains

Important!

The maximum number of switches in a BR switch chain depends on many factors, including the cable length. This case example shows a standard application. You will find further connection examples at www.euchner.com.

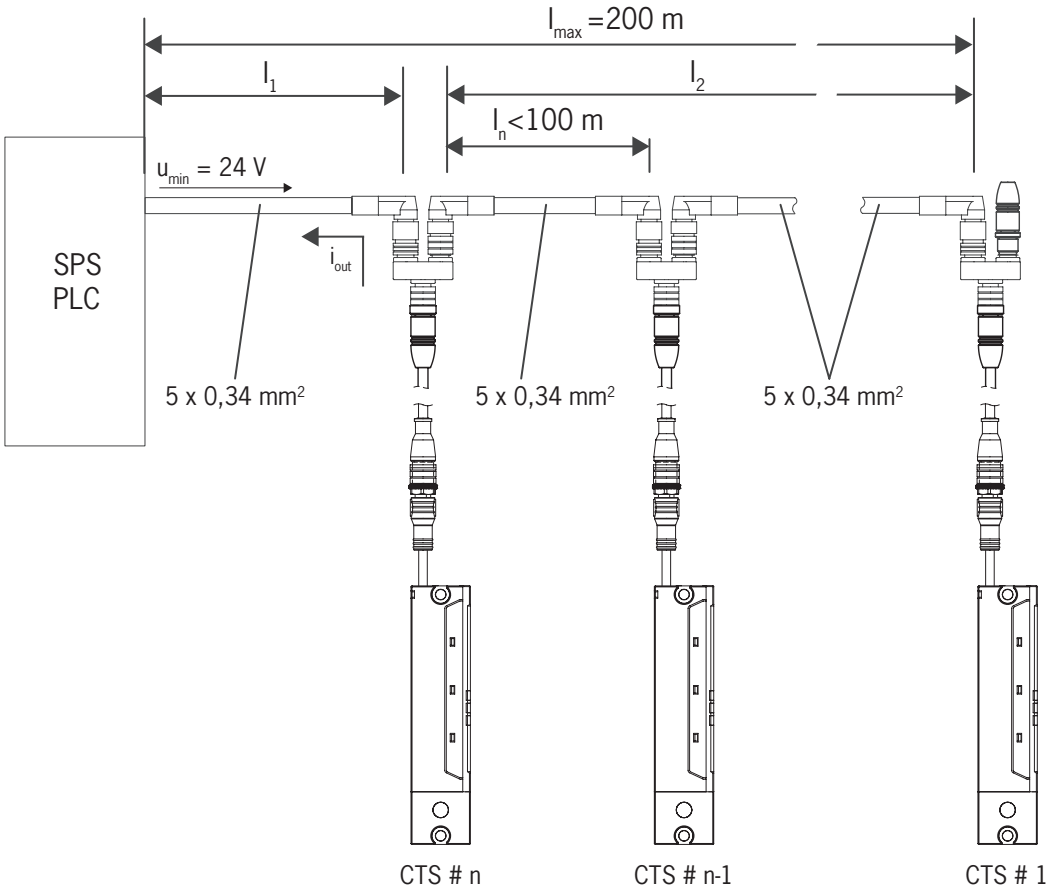

11.2.2. Determining cable lengths using the example table

n Max. number of switches depending on the cable length	$I_{FO1A/FO1B}$ (mA) Possible output current per channel FO1A/FO1B	l_1 (m) Max. cable length from the last switch to the control system
5	10	150
	25	100
	50	80
	80	50
6	10	120
	25	90
	50	70
	80	50
10	10	70
	25	60
	50	50
	80	40

11.2.3. Connector assignment of Y-distributor for series connection without IO-Link communication

(Only for BR version with plug connectors 2 x M12)

Important!

- The switch chain must always be terminated with strapping plug 097645.
- A higher-level control system cannot detect which safety door is open or on which switch a fault has occurred with this connection technology.

Plug connector X1	Y-distributor	Plug connector X2/X3

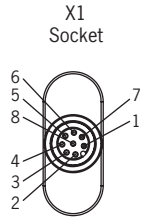

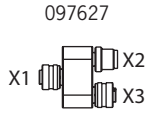

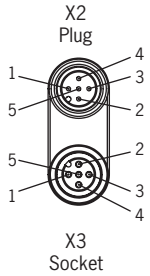

X1	
Pin	**Function**
X1.1	FI1B
X1.2	UB
X1.3	FO1A
X1.4	FO1B
X1.5	n.c.
X1.6	FI1A
X1.7	0VUB
X1.8	*

X2	
Pin	**Function**
X2.1	UB
X2.2	FO1A
X2.3	0 V
X2.4	FO1B
X2.5	*

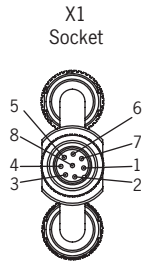

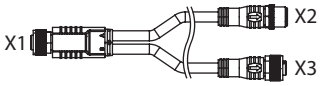

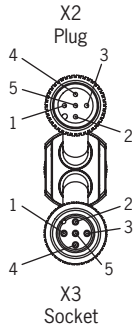

X3	
Pin	**Function**
X3.1	UB
X3.2	FI1A
X3.3	0 V
X3.4	FI1B
X3.5	*

* Function and compatibility are dependent on the connector assignment of the device connected.

EN

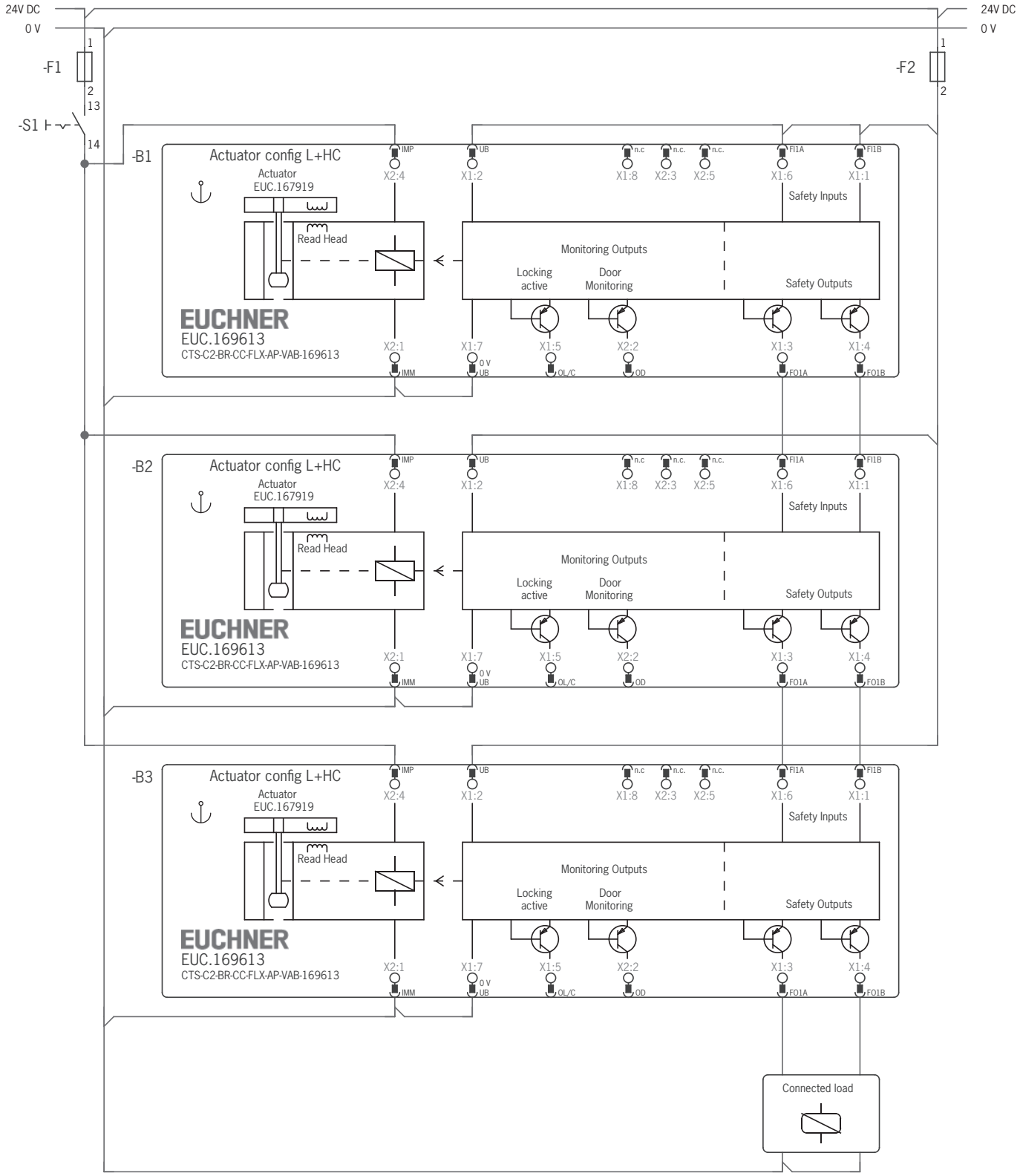

Fig. 6: Connection example for series connection

11.2.4. Connector assignment of Y-distributor for series connection with IO-Link communication

(Only for BR version with plug connectors 2 x M12)

Important!

- These Y-distributors can be used only with device variants that control guard locking via IO-Link communication.
- The switch chain must always be terminated with strapping plug 097645.

Plug connector X1		Y-distributor	Plug connector X2/X3
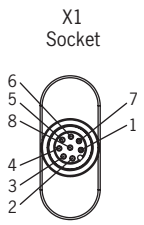		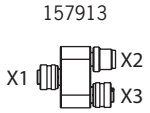	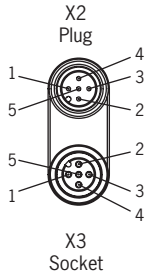
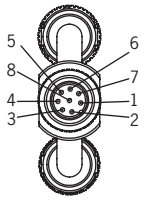		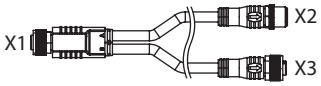	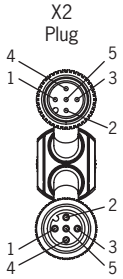

X1	
Pin	**Function**
X1.1	FI1B
X1.2	UB
X1.3	FO1A
X1.4	FO1B
X1.5	C
X1.6	FI1A
X1.7	0VUB
X1.8	n.c.

X2	
Pin	**Function**
X2.1	UB
X2.2	FO1A
X2.3	0 V
X2.4	FO1B
X2.5	C

X3	
Pin	**Function**
X3.1	UB
X3.2	FI1A
X3.3	0 V
X3.4	FI1B
X3.5	C

EN

12. Using communication data

A BR/IO-Link Gateway is required to use the device's communication data and forward them to a higher-level bus system. The following devices are suitable:

- GWY-CB-1-BR-IO (BR/IO-Link Gateway)
- ESM-CB (safety relay with integrated BR/IO-Link Gateway)

12.1. Connection to a BR/IO-Link Gateway GWY-CB

The Gateway is an IO-Link device. Communication via IO-Link offers cyclical (process data) and acyclical (device data and events) data exchange (see chapter *12.3. Overview of the communication data on page 29)*.

The communication connection C on the device allows the diagnostic line to be connected to the Gateway. The Ox/C connection represents a non-safety-related communication channel between the Gateway and the connected devices.

IO-Link communication can be used for the following functions as well:

- Reset for acknowledging error messages

You will find further information in the operating instructions for your BR/IO-Link Gateway.

12.2. Connection to a safety relay ESM-CB

The safety relay ESM-CB features an integrated BR/IO-Link Gateway. In addition to functioning as an IO-Link device (see chapter *12.1. Connection to a BR/IO-Link Gateway GWY-CB on page 28)*, the device can be used for connecting two monitored single- or dual-channel sensor circuits. The sensor circuits evaluate various signaling devices:

- Sensor circuit S1 with short circuit detection; suitable for single- or dual-channel safety sensors
- Sensor circuit S2, suitable for OSSD signals; short circuit detection by signaling device

When at least one sensor circuit is interrupted, the safety relay initiates the safe state. Different relay starting behaviors and various monitoring functions are possible.

The device's safety outputs FO1A and FO1B are routed to the OSSD inputs of the safety relay. The Ox/C connection of the device allows the diagnostic line to be connected to the Gateway.

You will find further information in the operating instructions for your safety relay with integrated BR/IO-Link Gateway.

12.3. Overview of the communication data

The switch transmits both process data that are continuously transmitted to the evaluation unit (cyclical data) and data that can be polled specifically as needed (acyclical data). For further information on connection and on the communication data, refer to the operating instructions for your BR/IO-Link Gateway.

12.3.1. Cyclical data (process data)

Table 2: Cyclical data (process data)

	Bit 7	Bit 6	Bit 5	Bit 4	Bit 3	Bit 2	Bit 1	Bit 0
Byte 1	OI	-	OER	-	OM	-	-	OD
Byte 2	-	-	-	-	OLS	-	OL	OT

Bit	Signal	Message
OI	Diagnostics	There is a fault, see chapter *15.3. Error messages on page 36*.
OM	Status	The safety outputs of the device are switched.
OD	Door position 1	A valid actuator is detected in the actuating range, and the guard is closed.
OER	Escape release	The device has been unlocked manually.
OT	Door position 2	The actuator is inserted in the switch head and the guard locking can be activated.
OLS	Locking element	The locking element is stuck, see chapter *15.3. Error messages on page 36*.
OL	Guard locking	Guard locking is active.

12.3.2. Acyclical data (device data and events)

After one of the commands listed below is sent, the requested data are provided via the IO-Link Gateway. The reply message always consists of 8 bytes in big endian format.

Example 1: Reply message in response to the command *Send device ID number/serial number*: 06 **02 68 E0 00 01 17** 00

In this example, the device's ID number is **157920** and its serial number is **279**.

Byte number	Byte 0	Byte 1	Byte 2	Byte 3	Byte 4	Byte 5	Byte 6	Byte 7
Reply in hex	06	**02**	**68**	**E0**	**00**	**01**	**17**	00
Description	User data length in bytes	Device ID number			Serial number			Padding data
Reply in dec.	6 bytes	**157920**			**279**			–

Example 2: Reply message for the command *Send current device configuration*: 02 **01 08** 00 00 00 00 00

In this example, the device has the **high** coding level and guard locking monitoring is **active**.

Byte number	Byte 0	Byte 1	Byte 2	Byte 3	Byte 4	Byte 5	Byte 6	Byte 7
Reply in hex	02	**01**	**08**	00	00	00	00	00
Description	User data length in bytes	Coding level	Guard lock monitoring	Padding data				
Reply in dec.	2 bytes	**High coding level**	**Active**	–	–	–	–	–

EN

Command		Reply		
HEX	Meaning	Number of bytes	Bit sequences (big endian format)	
2	Send device ID number/serial number	6	Bytes 1 - 3	Device ID number
			Bytes 4 - 6	Serial number
3	Send version number of the device	5	Byte 1	{V}
			Bytes 2 - 4	Version number
5	Send number of devices in series connection	1		
8	Send number of starting processes	3		
12	Send current error code	1		
13	Send most recently saved error code	1		
14	Send size of log file	1		
15	Send entry from log file with index	1		
16	Send current actuator code	5	Bytes 3 - 4	
17	Send taught-in actuator code	5	Bytes 3 - 4	
18	Send disabled actuator code	5	Bytes 3 - 4	
19	Send applied voltage in mV	2		
0B	Send current device configuration	2	Byte 1	0x00 - Coding level not configured
				0x01 - High coding level
				0x02 - Low coding level
			Byte 2	0x00 - Guard lock monitoring not configured
				0x05 - Guard lock monitoring optional
				0x08 - Guard lock monitoring active
0F	Send number of teach-in operations, factory resets and resets for acknowledging error messages	3	Byte 1	Number of teach-in operations
			Byte 2	Number of factory resets
			Byte 3	Number of resets for acknowledging error messages
1A	Send current temperature in °C	1		
1B	Send number of switching cycles	3		
1D	Reset for acknowledging error messages 1)	-		
1E	Factory reset	1	0x1E – Factory reset performed	

1) Each BR device must be addressed individually in a chain.

For more information on these and other acyclical data, refer to the operating instructions for your BR/IO-Link Gateway.

13. Setup

13.1. Configuring device and teaching-in actuator for the first time

The device must be configured and the actuator must be allocated to the safety switch before the system forms a functional unit. During configuration, with the aid of a function actuator, the monitoring of the guard locking for process protection is specified as permanently active or available as an additional option. The coding level is also defined. As such the selection of the actuator determines the function of the device.

Configuration and the teach-in operation occur simultaneously in the delivery state or after a factory reset.

Actuator	Monitoring of the guard locking for process protection	Coding level
A-FLX-D-0C-167919 → L + HC	Active	High coding level
A-FLX-D-0D-169044 → I + HC	Optional	High coding level
A-FLX-D-0E-169045 → L + LC	Active	Low coding level
A-FLX-D-0F-169046 → I + LC	Optional	Low coding level

WARNING

Danger to life due to improper use

- During the initial configuration or reconfiguration after a factory reset, ensure that all risk assessment measures for the selected function are performed.

Important!

- If the actuator to be taught-in is in the actuating range for less than 30 s, the device will not be configured and the actuator will not be taught-in.

Prerequisite:

- The device is in the delivery state. A factory reset must be performed before a preconfigured device can be reconfigured (see chapter *14. Factory reset on page 34).*
- The device is isolated from the operating voltage.

1. Apply operating voltage.

➡ The STATE LED flashes white quickly. The device is carrying out a self-test.

➡ The STATE LED illuminates white. The device is in unlimited teach-in standby.

2. Insert an actuator.

➡ The teach-in operation begins. The STATE LED flashes alternately white/violet slowly.

➡ The teach-in operation ends after approx. 30 s. The STATE LED flashes alternately green/blue quickly (approx. 3 Hz).

3. Switch off operating voltage for at least 3 s.

➡ The code of the actuator taught-in is activated in the safety switch. The actuator is valid.

4. Switch on operating voltage.

➡ The device operates normally.

EN

13.2. Teaching-in new actuator (only for evaluation of the actuator with a high coding level)

ⓘ	**Tip!** Prior to switching on the operating voltage, close the guard on which the actuator to be taught-in is installed. The teach-in operation starts immediately after switching on. This feature simplifies above all teach-in with series connections and on large installations.

ⓘ	**Important!** ‣ During a teach-in operation, the safety outputs are switched off, i.e. the system is in the safe state. ‣ The safety switch disables the code of the preceding device if teach-in is carried out for a new actuator. Teach-in is not possible again immediately for this device if a new teach-in operation is carried out. The disabled code is released again in the safety switch only after a third code has been taught-in. ‣ The safety switch can be operated only with the last actuator taught-in. ‣ The number of teach-in operations is unlimited. ‣ If the actuator to be taught-in is within the actuating range for less than 30 s, it will not be activated and the most recently taught-in actuator will remain saved. The device indicates an error (see chapter *15.3. Error messages on page 36*).

Prerequisite:

‣ The device is isolated from the operating voltage.

1. Make sure there is no actuator in the actuating range.
2. Apply operating voltage.

➡ The STATE LED flashes white quickly (5 Hz). The device is carrying out a self-test.

➡ The device is in teach-in standby for up to 3 minutes. The STATE LED flashes green.

4. Insert an actuator that has not been taught-in.

➡ The teach-in operation begins. The STATE LED flashes alternately white/violet slowly.

➡ The teach-in operation ends after approx. 30 s. The STATE LED flashes alternately green/blue quickly (approx. 3 Hz).

5. Switch off operating voltage for at least 3 s.

➡ The code of the new actuator taught-in is activated in the safety switch. The actuator is valid.

6. Switch on operating voltage.

➡ The device operates normally.

13.3. Functional check

⚠	**WARNING** Danger of fatal injury as a result of faults in installation and functional check. ‣ Before carrying out the functional check, make sure that there are no persons in the danger zone. ‣ Observe the valid accident prevention regulations.

13.3.1. Mechanical function test

The actuator must slide easily into the switch. Close the guard several times to check the function.

13.3.2. Electrical function test

After installation and after any fault, the safety function must be fully checked. Proceed as follows:

→ L + ...

If monitoring of the guard locking for process protection is active:

1. Switch on operating voltage.

➡ The machine must not start automatically.

➡ The safety switch carries out a self-test. The STATE LED then flashes green slowly.

2. Close all guards. In case of guard locking by solenoid force: activate guard locking.

➡ The machine must not start automatically. It must not be possible to open the guard.

➡ The STATE LED illuminates green, the LOCK LED illuminates orange.

3. Enable operation in the control system.

➡ It must not be possible to deactivate guard locking as long as operation is enabled.

4. Unlock guard locking if necessary and open guard.

➡ The machine must switch off and it must not be possible to start it as long as the guard is open.

Repeat steps 2 - 4 for each guard.

→ I + ...

If monitoring of the guard locking for process protection is optional:

1. Switch on operating voltage.

➡ The machine must not start automatically.

➡ The safety switch carries out a self-test. The STATE LED then flashes green slowly.

2. Close all guards. As soon as the actuator is inserted into the switch, the safety outputs are switched on independent of the state of the guard locking.

➡ The machine must not start automatically.

➡ The STATE LED illuminates green. In addition, depending on the state of the guard locking, the LOCK LED illuminates orange permanently or with a short interruption.

3. Enable operation in the control system.

4. Unlock guard locking if necessary and open guard.

➡ The machine must switch off and it must not be possible to start it as long as the guard is open.

Repeat steps 2 - 4 for each guard.

EN

14. Factory reset

A factory reset deletes the configuration and restores the device's factory settings.

To perform a factory reset, connect the two outputs FO1A and FO1B to 0 V before switching on or send the command 0x1E via IO-Link communication (see chapter *12.3.2. Acyclical data (device data and events) on page 29).*

15. Status and error messages

15.1. LED displays

LED	Color
STATE	RGB
LOCK	Orange
DIA	Red

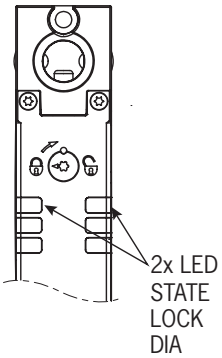

ⓘ	**Important!** If you do not find the displayed device status in the following tables, this indicates an internal device fault. Contact the manufacturer.

Key to symbols	○		LED not illuminated
	☀		LED illuminated
	quickly		LED flashes quickly (3 Hz)
	slowly		LED flashes slowly (0.6 Hz)
	☀ ⇔ ☀		LED flashes alternately
	X		Any state

15.2. Status messages

Operating mode	LED indicator		Safety outputs FO1A / FO1B	Guard locking signal OL	Door position 1 signal OD	Status
	STATE RGB	LOCK Orange				
Self-test	white quickly 5 Hz (CTS-BP: 2 s; CTS-BR: 5 s)	○	off	off	off	Self-test after operating voltage is switched on.
	green quickly					No communication with the BR/IO-Link Gateway.
Normal operation	green		on	on	on	→ L + ... If guard locking monitoring is active: door is closed and locked. The safety outputs of the preceding device in a series connection are switched on.
	green	slowly	on	off	on	→ I + ... If guard locking monitoring is optional: door is closed. The safety outputs of the preceding device in a series connection are switched on.
	slowly	slowly	off	on	on	Door is closed and not locked. The safety outputs of the preceding device in a series connection are switched off.
	slowly	○	off	off	off	Door is open.
	slowly	quickly	off	off	off	Door is open and ready for locking.
	white/orange slowly	slowly	off	off	X	The escape release has been actuated.
Teach-in operation	white	○	off	off	on	Device is in teach-in standby (see chapter *13.1. Configuring device and teaching-in actuator for the first time on page 31).*
	white/violet slowly			X	off	Teach-in operation. Door is closed.
	green/blue quickly			X	X	Positive acknowledgment after successful teach-in operation.
Factory reset	white/blue quickly	○	off	off	off	Factory reset
Error	depending on the error	depending on the error	off	depending on the error		Error message (see chapter *15.3. Error messages on page 36).*

EN

15.3. Error messages

Error code via IO-Link	LED indicator			Error	Troubleshooting	Acknowledging errors	
	STATE RGB	LOCK Orange	DIA Red			Open/close door	Reset
Teach-in error							
0x1F	white/red slowly	○		Actuator removed from the actuating range prior to the end of the teach-in operation.	Check whether the actuator is outside the actuating range or in the limit range.		●
0x25	blue quickly			Disabled actuator detected during the teach-in operation: The actuator was taught-in during the penultimate teach-in operation and is disabled for the current teach-in operation.	Repeat the teach-in operation with a new actuator (see chapter *13.2. Teaching-in new actuator (only for evaluation of the actuator with a high coding level) on page 32*).		●
0x42	blue slowly			Invalid actuator detected: The actuator is not intended for the current device configuration.	› Perform the teach-in operation with an actuator intended for the current device configuration. › If the device is to be reconfigured, observe chapter *13.1. Configuring device and teaching-in actuator for the first time on page 31*.		●
0x45	blue			Faulty or incompatible actuator detected: The actuator's data structure cannot be read. The actuator is faulty or is not suitable for the device.	Repeat teach-in operation with new actuator.		●
Input error							
0x2E	violet slowly	○		Different signal states at the safety inputs FI1A and FI1B during operation.	› Check wiring. › Check preceding device in the switch chain.	●	
0x30				Different signal states at the safety inputs FI1A and FI1B during the self-test.			●
0x31 0x32				Test pulses not detected at safety input FI1A or FI1B during operation.		●	
0x36 0x37				Test pulses at safety input FI1A or FI1B not detected during self-test.			●
Transponder/read error							
0x44	blue slowly			Invalid actuator detected during operation: The actuator is not intended for the current device configuration.	Use a valid actuator.	●	
0x46	blue			Faulty or incompatible actuator detected during operation: The actuator's data structure cannot be read. The actuator is faulty or is not suitable for the device.		●	
-0x47	blue quickly			Disabled actuator detected during operation: The actuator is not the currently valid actuator.		●	
0x48	white/blue slowly			Actuator not taught-in detected during operation.	› Use the currently valid actuator. › Teach-in actuator.	●	
0x89	blue/red quickly			Possibly mechanically damaged actuator detected during operation.	› Check actuator for any damage. If necessary, replace actuator. › Check whether the actuator is outside the actuating range or in the limit range.		●

Error code via IO-Link	LED indicator			Error	Troubleshooting	Acknowledging errors	
	STATE RGB	LOCK Orange	DIA Red			Open/close door	Reset
Output error							
0x4C 0x4D	violet quickly	○		A HIGH signal is detected at safety output FO1A or FO1B during the self-test.	Check wiring.		●
0x54				The voltage level at safety outputs FO1A and FO1B during operation does not meet the requirements. External voltage might be present.		●	
Environment error							
0x60	orange/red slowly	○		Supply voltage too high.	Decrease supply voltage.	●	
0x61				Supply voltage too low.	‣ Increase supply voltage. ‣ Check system configuration: cable length, number of devices in the switch chain.	●	
0x62	orange/red quickly			Device temperature too high.	Observe the specified temperature range (see chapter *16. Technical data on page 38).*		●
0x63				Device temperature too low.			●
Internal error							
0x01	red	○		Internal device error	Restart the device. On repeated occurrence, contact the manufacturer.		●

15.4. Acknowledging error messages

If the DIA LED flashes inversely once, the error message can be acknowledged by opening and closing the guard. If the error is still displayed afterward, a reset must be performed.

If the LED DIA is permanently illuminated, the error message can be acknowledged only by a reset.

The reset can be performed as follows.

Reset	Centrally for all switches in a chain	Each switch must be addressed individually	Further information
By briefly disconnecting the power supply (at least 3 s)	●	-	-
Via the cyclical data of IO-Link communication	●	-	See operating instructions for the IO-Link Gateway
Via the acyclical data of IO-Link communication	-	●	See chapter *12.3.2. Acyclical data (device data and events) on page 29*

Resetting to acknowledge error messages does not delete the configuration.

ⓘ	**Important!** Contact the manufacturer if the fault display is not reset after briefly disconnecting the power supply.

EN

16. Technical data

NOTICE

If a data sheet is available for the product, the information on the data sheet applies.

16.1. Technical data for safety switch CTS-C2-BP/BR-CC-FLX

Parameter	Value			Unit
	min.	typ.	max.	
General				
Material - Switch head - Switch housing		Die-cast zinc Reinforced thermoplastic		
Installation orientation		Any		
Degree of protection		IP65/IP67/IP69/IP69K		
Safety class acc. to EN IEC 61140		III		
Degree of contamination (external, acc. to EN 60947-1)		3		
Mechanical life		1 x 10^6 operating cycles		
Ambient temperature at U_B = 24 V	-20	-	+55	°C
Actuator approach speed max.		20		m/min
Actuating/extraction/retention force		Device dependent, see www.euchner.com		N
Locking force F_{max}		3900		N
Locking force F_{Zh}		3000		N
Weight		0.34		kg
Connection (depending on version)		2 plug connectors M12, 5- and 8-pin / 1 plug connector M12, 8-pin		
Operating voltage U_B (reverse polarity protected, regulated, residual ripple < 5%)		24 -15% / +20% (SELV)		V DC
Current consumption I_{UB} at U_B = 24 V		50		mA
The following applies to the approval acc. to UL		Operation only with UL Class 2 power supply or equivalent measures		
Switching load acc. to UL		DC 24 V, class 2		
External fuse (operating voltage U_B)	1	-	8	A
External fuse (solenoid operating voltage U_{IMP})	1	-	8	A
Rated insulation voltage U_i	-	-	32	V
Rated impulse withstand voltage U_{imp}	-	-	0.5	kV
Rated conditional short-circuit current		100		A
Shock and vibration resistance		Acc. to EN 60947-5-3		
EMC protection requirements		Acc. to EN 60947-5-3		
Ready delay	-	-	1	s
Risk time for single device	-	-	200	ms
Risk time extension per device		10		ms
Turn-on time	-	-	400	ms
Discrepancy time between both safety outputs acc. to EN 60947-5-3	-	-	10	ms
Test pulse duration		0.3		ms
Test pulse interval	96	-	-	ms
Safety outputs FO1A/FO1B		Semiconductor outputs, p-switching, short circuit-proof		
Output voltage U_{FO1A}/U_{FO1B} 1) - HIGH U_{FO1A}/U_{FO1B} - LOW U_{FO1A}/U_{FO1B}	 U_B - 2 0	 - -	 U_B 1	V DC
Switching current per safety output	1	-	80	mA
Utilization category acc. to EN 60947-5-2		DC-13 24 V 80 mA Caution: outputs must be protected with a free-wheeling diode in case of inductive loads		
Switching frequency	-	-	0.2	Hz
Monitoring outputs Ox/C		p-switching, short circuit-proof		
Output voltage	0.8 x U_B	-	U_B	V DC
Max. load			20	mA
Solenoid				
Solenoid operating voltage UIMP (reverse polarity protected, regulated, residual ripple < 5%)		24 V DC ± 20 %		V DC
Solenoid current consumption I_{IMP}	-	-	500	mA
Connection rating at max. switching frequency		9		W
Duty cycle		100		%
Reliability values acc. to EN ISO 13849-1 2)		**Monitoring of the guard position**		
Category		4		
Performance Level (PL)		e		
PFH_D		6.44 x 10^{-9}/h		
Mission time		20		years

1) Values at a switching current of 50 mA without taking into account the cable lengths
2) Refer to the declaration of conformity in chapter *20* for the issue date.

16.1.1. Typical system times

Refer to the technical data for the exact values.

Ready delay:

After switching on, the device carries out a self-test. The system is ready for operation only after this time.

Turn-on time of safety outputs:

The max. reaction time t_{on} is the time from the moment when the guard is locked to the moment when the safety outputs switch on.

Risk time according to EN 60947-5-3:

The risk time is the maximum time until at least one of the safety outputs FO1A or FO1B switches off safely when the actuator is removed from the actuating range. This also applies if an internal or external fault occurs at this moment.

For optional guard locking monitoring for process protection the following applies: if an actuator moves outside the actuating range, the safety outputs FO1A and FO1B are switched off after the risk time at the latest.

If several devices are operated in a series connection, the risk time of the overall device chain will increase with each device added. Use the following calculation formula:

$t_r = t_{r,e} + (n \times t_l)$

t_r = Total risk time

$t_{r,e}$ = Risk time for single device (see technical data)

t_l = Risk time extension per device

n = Number of additional devices (total number -1)

Discrepancy time:

The safety outputs FO1A and FO1B switch with a slight delay in relation to each other. They have the same signal state no later than after the discrepancy time.

Test pulses at the safety outputs:

The device generates its own test pulses on the safety outputs FO1A and FO1B. A downstream control system must tolerate these test pulses.

This can usually be set up in the control systems by parameter assignment. If parameter assignment is not possible for your control system or if shorter test pulses are required, contact our support organization.

The test pulses are output only if the safety outputs are switched on.

EN

16.2. Radio frequency approvals

FCC ID: 2AJ58-18
IC: 22052-18

FCC/IC-Requirements

This device complies with part 15 of the FCC Rules and with Industry Canada's licence-exempt RSSs. Operation is subject to the following two conditions:

1) This device may not cause harmful interference, and

2) this device must accept any interference received, including interference that may cause undesired operation.

Changes or modifications not expressly approved by the party responsible for compliance could void the user's authority

to operate the equipment.

NOTE: This equipment has been tested and found to comply with the limits for a Class A digital device, pursuant to part 15 of the FCC Rules. These limits are designed to provide reasonable protection against harmful interference when the equipment is operated in a commercial environment. This equipment generates, uses, and can radiate radio frequency energy and, if not installed and used in accordance with the instruction manual, may cause harmful interference to radio communications.

Operation of this equipment in a residential area is likely to cause harmful interference in which case the user will be required to correct the interference at his own expense.

Le présent appareil est conforme aux CNR d'Industrie Canada applicables aux appareils radio exempts de licence. L'exploitation est autorisée aux deux conditions suivantes :

(1) l'appareil ne doit pas produire de brouillage, et

(2) l'utilisateur de l'appareil doit accepter tout brouillage radioélectrique subi, même si le brouillage est susceptible d'en compromettre le fonctionnement.

Supplier's Declaration of Conformity
47 CFR § 2.1077 Compliance Information

Unique Identifier:
CTS-C1-BP Series
CTS-C1-BR Series
CTS-C2-BP Series
CTS-C2-BR Series

Responsible Party – U.S. Contact Information
EUCHNER USA Inc.
1860 Jarvis Avenue
Elk Grove Village, Illinois 60007

info(at)euchner-usa.com
http://www.euchner-usa.com

16.3. Dimension drawing of safety switch CTS

16.4. Technical data for actuator A-FLX-D-0.-...

Parameter	Value			Unit
	min.	typ.	max.	
Material				
- Mounting		Safety screws, galvanized steel 8.8		
- Cover		NBR		
- Actuating element		Stainless steel		
- Housing		fiber reinforced plastic, black		
Weight		0.06		kg
Ambient temperature	-20	-	+55	°C
Degree of protection		IP65/IP67/IP69/IP69K		
Mechanical life		1×10^6		
Locking force, max.		3900		N
Locking force F_{Zh}		3000		N
Installation orientation		Any		
Overtravel		4		mm
Power supply		Inductive via read head		

16.4.1. Dimension drawing for actuatorA-FLX-D-0.-...

17. Ordering information and accessories

Tip!

Suitable accessories, e.g. cables or assembly material, can be found at www.euchner.com. To order, enter the order number of your item in the search box and open the item view. Accessories that can be combined with the item are listed in *Accessories*.

18. Inspection and service

WARNING

Danger of severe injuries due to the loss of the safety function.

- If damage or wear is found, the complete switch and actuator assembly must be replaced. Replacement of individual parts or assemblies is not permitted.
- Check the device for proper function at regular intervals and after every fault. For information about possible time intervals, refer to EN ISO 14119:2013, section 8.2.

Regular inspection of the following is necessary to ensure trouble-free long-term operation:

- Check the switching function (see chapter *13.3. Functional check on page 33*) Check all additional functions (e.g. escape release, lockout bar, etc.)
- Check the secure mounting of the devices and the connections
- Check for contamination

No servicing is required. Repairs to the device are only allowed to be made by the manufacturer.

NOTICE

The year of manufacture is given in the laser marking at the bottom right corner. The current version number in the format (V X.X.X) can also be found on the device.

19. Service

If servicing is required, please contact:

EUCHNER GmbH + Co. KG
Kohlhammerstraße 16
70771 Leinfelden-Echterdingen
Germany

Service telephone:

+49 711 7597-500

E-mail:

support@euchner.de

Internet:

www.euchner.com

20. Declaration of conformity

The declaration of conformity is part of the operating instructions.

The complete EU declaration of conformity can also be found at www.euchner.com. Enter the order number of your device in the search box. The document is available under *Downloads*.

EN

EUCHNER GmbH + Co. KG
Kohlhammerstraße 16
70771 Leinfelden-Echterdingen
Germany
info@euchner.de
www.euchner.com

Edition:
MAN20001531-01-09/22
Title:
Operating Instructions Transponder-Coded Safety Switch
CTS-C2-BP/BR-CC-FLX
(translation of the original operating instructions)
Copyright:
© EUCHNER GmbH + Co. KG, 09/2022

Subject to technical modifications; no responsibility is accepted for the accuracy of this information.