FCC Radio Test Report

FCC ID: 2AJ5B-C78

Original Grant

Report No.	:	TB-FCC177637
Applicant	:	SAGE HUMAN ELECTRONICS INTERNATIONAL CO.,LTD.
Equipment Under Test (EUT)		
EUT Name	:	Bluetooth FM Transmitter for Car
Model No.	:	C78
Series Model No.	:	C78Q, C78S, BH477A, BH477B, BH477C
Brand Name	:	----
Sample ID	:	20201118-14-5#& 20201118-14-6#
Receipt Date	:	2020-12-04
Test Date	:	2020-12-05 to 2021-02-22
Issue Date	:	2021-02-23
Standards	:	FCC Part 15, Subpart C 15.239
Test Method	:	ANSI C63.10:2013
Conclusions	:	**PASS**
		In the configuration tested, the EUT complied with the standards specified above, The EUT technically complies with the FCC requirements
Test/Witness Engineer	:	Rebeca
Engineer Supervisor	:	IVAN SU
Engineer Manager	:	Ray Lai

Rebeca

Ivan Su

Ray Lai

This report details the results of the testing carried out on one sample. The results contained in this test report do not relate to other samples of the same product. The manufacturer should ensure that all products in series production are in conformity with the product sample detailed in the report.

1/F.,Building 6, Rundongsheng Industrial Zone, Longzhu, Xixiang, Bao'an District, Shenzhen, Guangdong, China
Tel: +86 75526509301 Fax: +86 75526509195

Contents

CONTENTS 2
1. GENERAL INFORMATION ABOUT EUT 5
1.1 Client Information 5
1.2 General Description of EUT (Equipment Under Test) 5
1.3 Block Diagram Showing the Configuration of System Tested 6
1.4 Description of Support Units 6
1.5 Description of Test Mode 6
1.6 Description of Test Software Setting 7
1.7 Measurement Uncertainty 7
1.8 Test Facility 8
2. TEST SUMMARY 9
3. TEST SOFTWARE 9
4. TEST EQUIPMENT 10
5. CONDUCTED EMISSION TEST 11
5.1 Test Standard and Limit 11
5.2 Test Setup 11
5.3 Test Procedure 12
5.4 Deviation From Test Standard 12
5.5 Test Data 12
6. RADIATED EMISSION TEST 13
6.1 Test Standard and Limit 13
6.2 Test Setup 14
6.3 Test Procedure 15
6.4 EUT Operating Condition 15
6.5 Deviation From Test Standard 15
6.6 Test Data 15
7. FUNDAMENTAL AND BAND EDGE TEST 16
7.1 Test Standard and Limit 16
7.2 Test Setup 16
7.3 Test Procedure 17
7.4 EUT Operating Condition 17
7.5 Deviation From Test Standard 17
7.6 Test Data 17
8. BANDWIDTH 18
8.1 Test Standard and Limit 18
8.2 Test Setup 18
8.3 Test Procedure 18
8.4 EUT Operating Condition 18
8.5 Deviation From Test Standard 18

8.6 Test Data 18
9. ANTENNA REQUIREMENT 19
9.1 Standard Requirement 19
9.2 Antenna Connected Construction 19
ATTACHMENT A-- RADIATED EMISSION TEST DATA 20
ATTACHMENT B--FUNDAMENTAL AND BAND EDGE TEST DATA 22
ATTACHMENT C-- BANDWIDTH DATA 28

Revision History

Report No.	Version	Description	Issued Date
TB-FCC177637	Rev.01	Initial issue of report	2021-02-23

1. General Information about EUT

1.1 Client Information

Applicant	:	SAGE HUMAN ELECTRONICS INTERNATIONAL CO.,LTD.
Address	:	4F.,A Building,Rongli Industrial Park,No.2 Guiyuan Rd.Guihua Community,Guanlan Town,Longhua New Dist. Shenzhen, China
Manufacturer	:	SAGE HUMAN ELECTRONICS INTERNATIONAL CO.,LTD.
Address	:	4F.,A Building,Rongli Industrial Park,No.2 Guiyuan Rd.Guihua Community,Guanlan Town,Longhua New Dist. Shenzhen, China

1.2 General Description of EUT (Equipment Under Test)

EUT Name	:	Bluetooth FM Transmitter for Car	
Models No.	:	C78, C78Q, C78S, BH477A, BH477B, BH477C	
Model Difference	:	All these models are identical in the same PCB, layout and electrical circuit, the only difference is appearance color.	
Product Description	:	Operation Frequency:	FM: 88.1-107.9 MHz
		Number of Channel:	199(Channel spacing 100KHz)
		Antenna Gain:	Integral Antenna(1.5dBi)
		Modulation Type:	FM
Power Rating	:	Input: DC 12-24V USB Output: QC3.0(DC 5V 3A, 9V2A, 12V1.5A) Type-C Output: PD3.0(DC 5V 3A, 9V2A, 12V1.5A) Shared Output: DC 5V4.8A(MAX)	
Software Version	:	N/A	
Hardware Version	:	C78_2819-V1.0	
Connecting I/O Port(S)	:	Please refer to the User's Manual	

Note:

(1) For a more detailed features description, please refer to the manufacturer's specifications or the User's Manual.

1.3 Block Diagram Showing the Configuration of System Tested

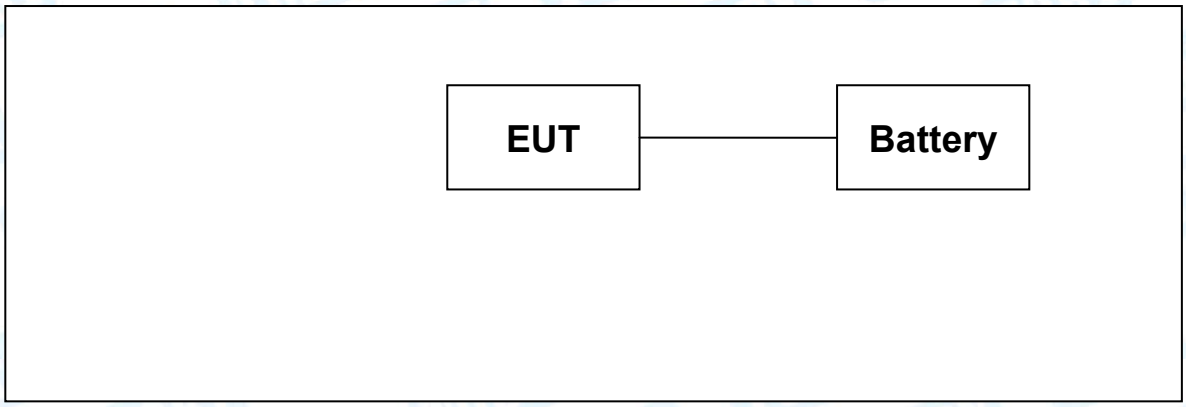

1.4 Description of Support Units

The EUT has been tested as an independent unit.

1.5 Description of Test Mode

To investigate the maximum EMI emission characteristics generates from EUT, the test system was pre-scanning tested base on the consideration of following EUT operation mode or test configuration mode which possible have effect on EMI emission level. Each of these EUT operation mode(s) or test configuration mode(s) mentioned follow was evaluated respectively.

Pretest Mode	
Pretest Mode	**Description**
Mode 1	Continuously transmitting (88.1MHz/98.1MHz/107.9MHz)
Radiated Emission	
Test Mode	**Description**
Mode 1	Continuously transmitting (88.1MHz/98.1MHz/107.9MHz)
Note : The antenna gain provided by the applicant, the verified for the RF conduction test provided by TOBY test lab.	

Note:

(1) During the testing procedure, the continuously transmitting mode was programmed by the customer.

(2) The EUT is considered a portable unit, and it was pre-tested on the positioned of each 3 axis: X axis, Y axis and Z axis. The worst case was found positioned on Z-plane. There for only the test data of this Z-plane were used for radiated emission measurement test.

1.6 Description of Test Software Setting

During testing channel& Power controlling software provided by the customer was used to control the operating channel as well as the output power level. The RF output power selection is for the setting of RF output power expected by the customer and is going to be fixed on the firmware of the final end product power parameters of transmitting mode.

1	**Product SW/HW Version :**	N/A
2	**Radio SW/HW Version:**	N/A
3	**Test SW Version:**	N/A
4	**RF Power Setting in Test SW:**	Adjust and control the corresponding transmission frequency through the EUT entity key.

1.7 Measurement Uncertainty

The reported uncertainty of measurement y ± U，where expended uncertainty U is based on a standard uncertainty multiplied by a coverage factor of k=2，providing a level of confidence of approximately 95 %.

Test Item	**Parameters**	**Expanded Uncertainty (U_{Lab})**
Conducted Emission	Level Accuracy: 9kHz~150kHz 150kHz to 30MHz	±3.50 dB ±3.10 dB
Radiated Emission	Level Accuracy: 9kHz to 30 MHz	±4.60 dB
Radiated Emission	Level Accuracy: 30MHz to 1000 MHz	±4.50 dB
Radiated Emission	Level Accuracy: Above 1000MHz	±4.20 dB

1.8 Test Facility

The testing report were performed by the Shenzhen Toby Technology Co., Ltd., in their facilities located at 1/F.,Building 6, Rundongsheng Industrial Zone, Longzhu, Xixiang, Bao'an District, Shenzhen, Guangdong, China. At the time of testing, the following bodies accredited the Laboratory:

CNAS (L5813)

The Laboratory has been accredited by CNAS to ISO/IEC 17025: 2017 General Requirements for the Competence of Testing and Calibration Laboratories for the competence in the field of testing. And the Registration No.: CNAS L5813.

A2LA Certificate No.: 4750.01

The laboratory has been accredited by American Association for Laboratory Accreditation(A2LA) to ISO/IEC 17025：2017 General Requirements for the Competence of Testing and Calibration Laboratories for the technical competence in the field of Electrical Testing. And the A2LA Certificate No.: 4750.01. FCC Accredited Test Site Number: 854351. Designation Number: CN1223.

IC Registration No.: (11950A)

The Laboratory has been registered by Certification and Engineering Bureau of Industry Canada for radio equipment testing. The site registration: Site# 11950A.

2. Test Summary

FCC Part 15 Subpart (15.239)				
Standard Section	**Test Item**	**Test Sample(s)**	**Judgment**	**Remark**
15.203	Antenna Requirement	20201118-14-5#	PASS	N/A
15.207	Conducted Emission	N/A	N/A	N/A
15.239 &15.209	Radiation Emission	20201118-14-5#	PASS	N/A
15.239	Occupied Bandwidth	20201118-14-6#	PASS	N/A
Note: (1)N/A is an abbreviation for Not Applicable. (2) The EUT is powered by DC battery, no requirement for this test item.				

3. Test Software

Test Item	Test Software	Manufacturer	Version No.
Conducted Emission	EZ-EMC	EZ	CDI-03A2
Radiation Emission	EZ-EMC	EZ	FA-03A2RE
RF Conducted Measurement	MTS-8310	MWRFtest	V2.0.0.0

4. Test Equipment

Conducted Emission Test					
Equipment	**Manufacturer**	**Model No.**	**Serial No.**	**Last Cal.**	**Cal. Due Date**
EMI Test Receiver	Rohde & Schwarz	ESCI	100321	Jul. 06, 2020	Jul. 05, 2021
RF Switching Unit	Compliance Direction Systems Inc	RSU-A4	34403	Jul. 06, 2020	Jul. 05, 2021
AMN	SCHWARZBECK	NNBL 8226-2	8226-2/164	Jul. 06, 2020	Jul. 05, 2021
LISN	Rohde & Schwarz	ENV216	101131	Jul. 06, 2020	Jul. 05, 2021
Radiation Emission Test					
Equipment	**Manufacturer**	**Model No.**	**Serial No.**	**Last Cal.**	**Cal. Due Date**
Spectrum Analyzer	Agilent	E4407B	MY45106456	Jul. 06, 2020	Jul. 05, 2021
EMI Test Receiver	Rohde & Schwarz	ESPI	100010/007	Jul. 06, 2020	Jul. 05, 2021
Spectrum Analyzer	Rohde & Schwarz	FSV40-N	102197	Jul. 06, 2020	Jul. 05, 2021
Bilog Antenna	ETS-LINDGREN	3142E	00117537	Mar.01, 2020	Feb. 28, 2022
Horn Antenna	ETS-LINDGREN	3117	00143207	Mar.01, 2020	Feb. 28, 2022
Horn Antenna	ETS-LINDGREN	BBHA 9170	BBHA9170582	Mar.01, 2020	Feb. 28, 2022
Loop Antenna	SCHWARZBECK	FMZB 1519 B	1519B-059	Jul. 07, 2020	Jul. 06, 2021
Pre-amplifier	Sonoma	310N	185903	Mar.01, 2020	Feb. 28, 2021
Pre-amplifier	HP	8449B	3008A00849	Mar.01, 2020	Feb. 28, 2021
Pre-amplifier	SKET	LNPA_1840G-50	SK201904032	Mar.01, 2020	Feb. 28, 2021
Cable	HUBER+SUHNER	100	SUCOFLEX	Mar.01, 2020	Feb. 28, 2021
Positioning Controller	ETS-LINDGREN	2090	N/A	N/A	N/A
Antenna Conducted Emission					
Equipment	**Manufacturer**	**Model No.**	**Serial No.**	**Last Cal.**	**Cal. Due Date**
Spectrum Analyzer	Agilent	E4407B	MY45106456	Jul. 06, 2020	Jul. 05, 2021
Spectrum Analyzer	Rohde & Schwarz	ESPI	100010/007	Jul. 06, 2020	Jul. 05, 2021
MXA Signal Analyzer	Agilent	N9020A	MY49100060	Sep. 11, 2020	Sep. 10, 2021
Vector Signal Generator	Agilent	N5182A	MY50141294	Sep. 11, 2020	Sep. 10, 2021
Analog Signal Generator	Agilent	N5181A	MY50141953	Sep. 11, 2020	Sep. 10, 2021
RF Power Sensor	DARE!! Instruments	RadiPowerRPR3006W	17I00015SNO26	Sep. 11, 2020	Sep. 10, 2021
	DARE!! Instruments	RadiPowerRPR3006W	17I00015SNO29	Sep. 11, 2020	Sep. 10, 2021
	DARE!! Instruments	RadiPowerRPR3006W	17I00015SNO31	Sep. 11, 2020	Sep. 10, 2021
	DARE!! Instruments	RadiPowerRPR3006W	17I00015SNO33	Sep. 11, 2020	Sep. 10, 2021

5. Conducted Emission Test

5.1 Test Standard and Limit

5.1.1Test Standard

FCC Part 15.207

5.1.2 Test Limit

Conducted Emission Test Limit

Frequency	Maximum RF Line Voltage (dBμV)	
	Quasi-peak Level	Average Level
150kHz~500kHz	66 ~ 56 *	56 ~ 46 *
500kHz~5MHz	56	46
5MHz~30MHz	60	50

Notes:
(1) *Decreasing linearly with logarithm of the frequency.
(2) The lower limit shall apply at the transition frequencies.
(3) The limit decrease in line with the logarithm of the frequency in the range of 0.15 to 0.50MHz.

5.2 Test Setup

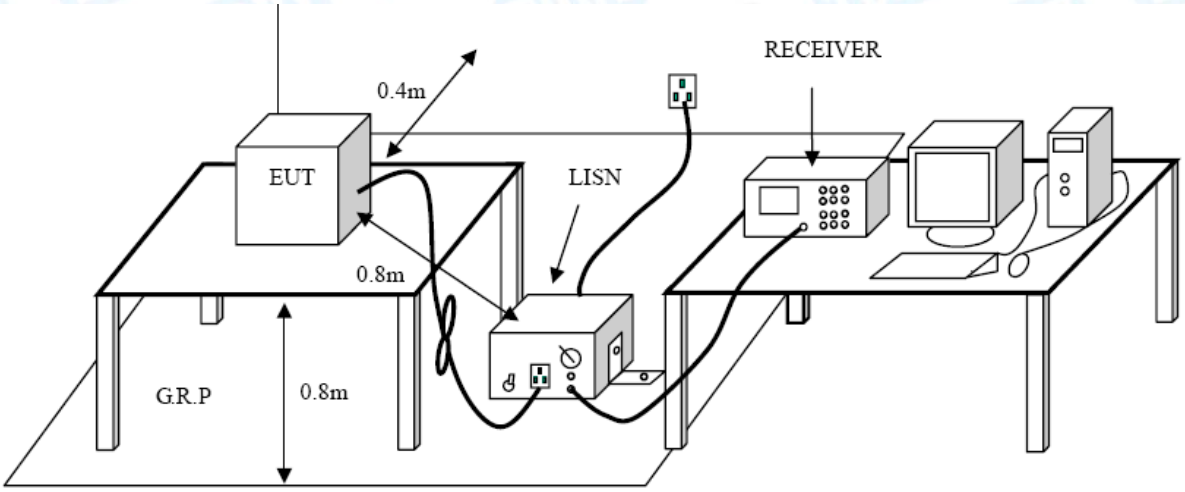

5.3 Test Procedure

The EUT was placed 0.8 meters from the horizontal ground plane with EUT being connected to the power mains through a line impedance stabilization network (LISN). All other support equipments powered from additional LISN(s). The LISN provide 50 Ohm/ 50uH of coupling impedance for the measuring instrument.

Interconnecting cables that hang closer than 40 cm to the ground plane shall be folded back and forth in the center forming a bundle 30 to 40 cm long.

I/O cables that are not connected to a peripheral shall be bundled in the center. The end of the cable may be terminated, if required, using the correct terminating impedance. The overall length shall not exceed 1 m.

LISN at least 80 cm from nearest part of EUT chassis.

The bandwidth of EMI test receiver is set at 9kHz, and the test frequency band is from 0.15MHz to 30MHz.

5.4 Deviation From Test Standard

No deviation

5.5 Test Data

The EUT is powered by DC battery, no requirement for this test item.

6. Radiated Emission Test

6.1 Test Standard and Limit

6.1.1 Test Standard

FCC Part 15.209 & 15.239

6.1.2 Test Limit

According to FCC 15.209 requirement:

In addition to the provisions of Section 15.209, the field strength of emissions from intentional radiators operated under this Section shall not exceed the following:

Frequency (MHz	Field Strength (microvolt/meter)	Measurement Distance (meters)
0.009~0.490	2400/F(KHz)	300
0.490~1.705	24000/F(KHz)	30
1.705~30.0	30	30
30~88	100	3
88~216	150	3
216~960	200	3
Above 960	500	3

Radiated Emission Limit (Above 1000MHz)

Frequency (MHz)	Distance Meters(at 3m)	
	Peak	Average
Above 1000	74	54

Note:

(1) The tighter limit applies at the band edges.

(2) Emission Level (dBuV/m)=20log Emission Level (uV/m)

6.2 Test Setup

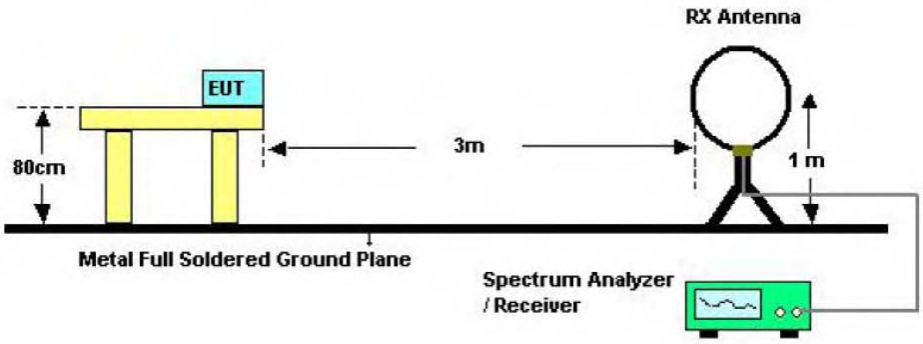

Below 30MHz Test Setup

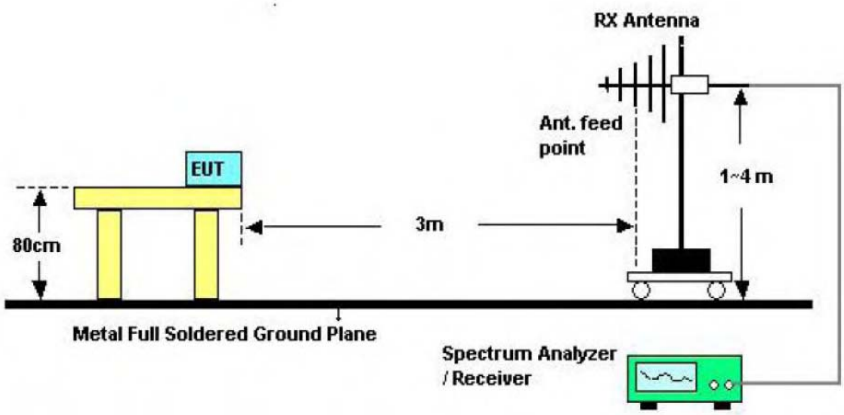

Below 1000MHz Test Setup

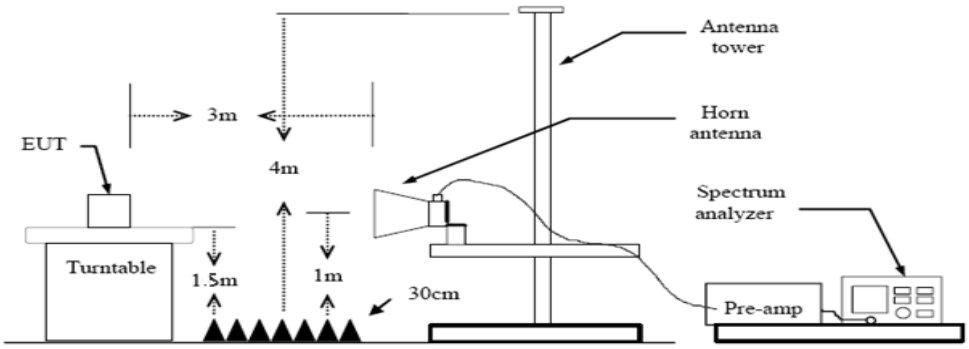

Above 1GHz Test Setup

6.3 Test Procedure

(1) The measuring distance of 3m shall be used for measurements at frequency up to 1GHz. The EUT was placed on a rotating 0.8m high above the ground, the table was rotated 360 degrees to determine the position of the highest radiation.
(2) Measurements at frequency above 1GHz. The EUT was placed on a rotating 1.5m high above the ground. RF absorbers covered the ground plane with a minimum area of 3.0m by 3.0m between the EUT and measurement receiver antenna. The RF absorber shall not exceed 30cm in high above the conducting floor. The table was rotated 360 degrees to determine the position of the highest radiation.
(3) The Test antenna shall vary between 1m and 4m, Both Horizontal and Vertical antenna are set to make measurement.
(4) The initial step in collecting conducted emission data is a spectrum analyzer peak detector mode pre-scanning the measurement frequency range. Significant peaks are then marked and then Quasi Peak detector mode re-measured.
(5) If the Peak Mode measured value compliance with and lower than Quasi Peak Mode Limit Bellow 1 GHz, the EUT shall be deemed to meet QP Limits and then no additional QP Mode measurement performed. But the Peak Value and average value both need to comply with applicable limit above 1 GHz.
(6) Testing frequency range below 1GHz the measuring instrument use VBW=120 kHz with Quasi-peak detection.
(7) Testing frequency range above 1GHz the measuring instrument use RBW=1 MHz and VBW=3 MHz with Peak Detector for Peak Values, and use RBW=1 MHz and VBW=10 Hz with Peak Detector for Average Values.
(8) For the actual test configuration, please see the test setup photo.

6.4 EUT Operating Condition

The Equipment Under Test was set to Continual Transmitting in maximum power.

6.5 Deviation From Test Standard

No deviation

6.6 Test Data

Please refer to the Attachment A.

7. Fundamental and Band Edge Test

7.1 Test Standard and Limit

7.1.1 Test Standard

FCC Part 15.209 & 15.239

7.1.2 Test Limit

According to FCC 15.239(a)(b) and 15.209 requirement:

The field strength of emissions from the intentional radiators operated under these frequency bands shall not exceed the following:

Fundamental Frequency (MHz)	Field Strength of Fundamental (dBuV/m)	
88 to 108	Peak	Average
	67.96	47.96

According to FCC 15.239(c) and 15.209 requirements:

Field strength of outside of the frequency bands limit show in below table.

Outside Frequency Band Edge	Distance Meters(at 3m)
Below 88 MHz	40.0 (QP)
Above 108 MHz	43.5 (QP)

7.2 Test Setup

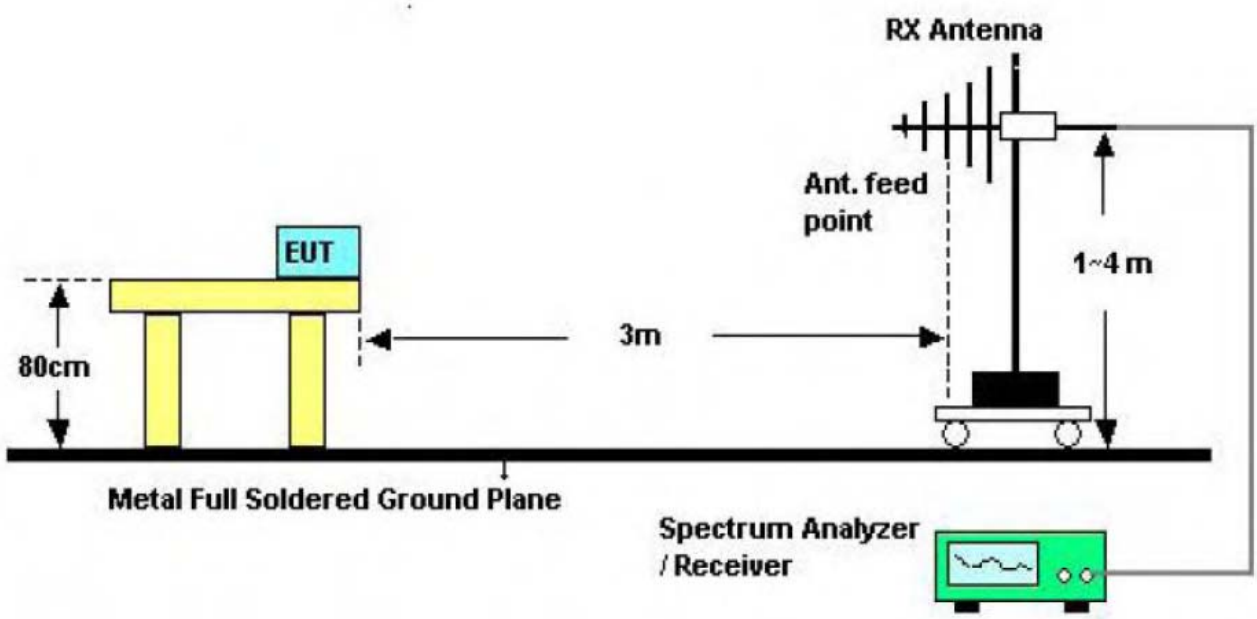

7.3 Test Procedure

(1) The measuring distance of 3m shall be used for measurements at frequency up to 1GHz. The EUT was placed on a rotating 0.8m high above the ground, the table was rotated 360 degrees to determine the position of the highest radiation.
(2) Measurements at frequency above 1GHz. The EUT was placed on a rotating 1.5m high above the ground. RF absorbers covered the ground plane with a minimum area of 3.0m by 3.0m between the EUT and measurement receiver antenna. The RF absorber shall not exceed 30cm in high above the conducting floor. The table was rotated 360 degrees to determine the position of the highest radiation.
(3) The Test antenna shall vary between 1m and 4m, Both Horizontal and Vertical antenna are set to make measurement.
(4) The initial step in collecting conducted emission data is a spectrum analyzer peak detector mode pre-scanning the measurement frequency range. Significant peaks are then marked and then Quasi Peak detector mode re-measured.
(5) If the Peak Mode measured value compliance with and lower than Quasi Peak Mode Limit Bellow 1 GHz, the EUT shall be deemed to meet QP Limits and then no additional QP Mode measurement performed. But the Peak Value and average value both need to comply with applicable limit above 1 GHz.
(6) Testing frequency range below 1GHz the measuring instrument use VBW=120 kHz with Quasi-peak detection.
(7) Testing frequency range above 1GHz the measuring instrument use RBW=1 MHz and VBW=3 MHz with Peak Detector for Peak Values, and use RBW=1 MHz and VBW=10 Hz with Peak Detector for Average Values.
(8) For the actual test configuration, please see the test setup photo.

7.4 EUT Operating Condition

The Equipment Under Test was set to Continual Transmitting in maximum power.

7.5 Deviation From Test Standard

No deviation

7.6 Test Data

Please refer to the Attachment B.

8. Bandwidth

8.1 Test Standard and Limit

8.1.1 Test Standard

FCC Part 15.239

8.1.2 Test Limit

Emissions from the intentional radiator shall be confined within a band 200 kHz wide centered on the operating frequency. The 200 kHz band shall lie wholly within the frequency range of 88-108 MHz.

8.2 Test Setup

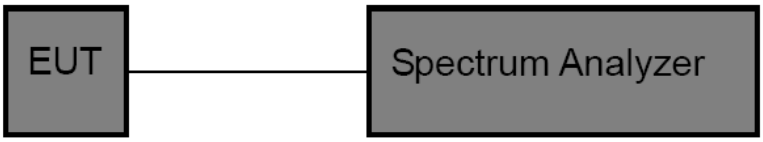

8.3 Test Procedure

(1) Set Spectrum Analyzer Center Frequency= Fundamental Frequency, RBW=3 kHz, VBW= 10 kHz, Span= 300 kHz.

(2) Measured the spectrum width with power higher than 20 dB below carrier.

8.4 EUT Operating Condition

The Equipment Under Test was Programmed to be in continuously transmitting mode.

8.5 Deviation From Test Standard

No deviation

8.6 Test Data

Please refer to the Attachment C.

9. Antenna Requirement

9.1 Standard Requirement

9.1.1 Standard

FCC Part 15.203

9.1.2 Requirement

An intentional radiator shall be designed to ensure that no antenna other than that furnished by the responsible party shall be used with the device. The use of a permanently attached antenna or of an antenna that uses a unique coupling to the intentional radiator shall be considered sufficient to comply with the provisions of this Section. The manufacturer may design the unit so that a broken antenna can be replaced by the user, but the use of a standard antenna jack or electrical connector is prohibited.

9.2 Antenna Connected Construction

The gains of the antenna used for transmitting is 1.5dBi, and the antenna connector is de-signed with permanent attachment and no consideration of replacement. Please see the EUT photo for details.

The EUT antenna is a Integral Antenna. It complies with the standard requirement.

Antenna Type
☑ Permanent attached antenna
☐ Unique connector antenna
☐ Professional installation antenna

Attachment A-- Radiated Emission Test Data

9 KHz~30 MHz

From 9 KHz to 30 MHz: Conclusion: PASS

Note: The amplitude of spurious emissions which are attenuated by more than 20dB Below the permissible value has no need to be reported.

30MHz~1GHz

Temperature:	23.5 ℃	**Relative Humidity:**	42%
Test Voltage:	DC 12V		
Ant. Pol.	Horizontal		
Test Mode:	88.1MHz		
Remark:	Only worse case is reported.		

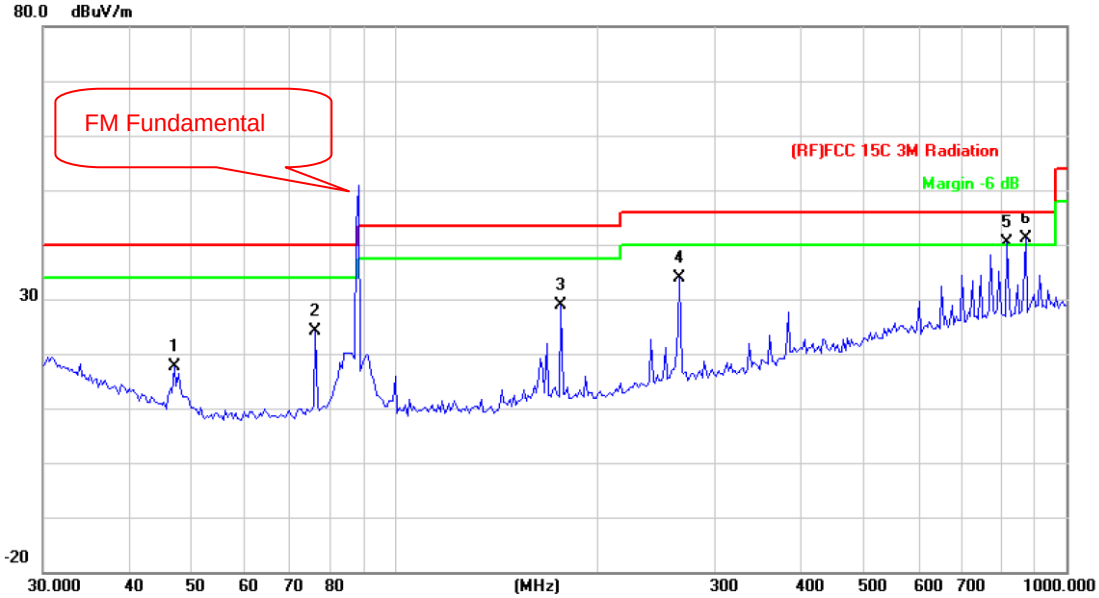

No.	Mk.	Freq.	Reading Level	Correct Factor	Measure-ment	Limit	Over	
		MHz	dBuV	dB/m	dBuV/m	dBuV/m	dB	Detector
1		46.9948	39.59	-22.07	17.52	40.00	-22.48	peak
2		76.2442	47.01	-22.82	24.19	40.00	-15.81	peak
3		176.8878	49.05	-20.23	28.82	43.50	-14.68	peak
4		265.6757	50.87	-16.93	33.94	46.00	-12.06	peak
5	!	815.9678	46.15	-5.73	40.42	46.00	-5.58	peak
6	*	869.1302	46.47	-5.26	41.21	46.00	-4.79	peak

Remark:
1. Corr. = Antenna Factor (dB/m) + Cable Loss (dB)
2. QuasiPeak (dBμV/m)= Corr. (dB/m)+ Read Level (dBμV)
3. Margin (dB) = QuasiPeak (dBμV/m)-Limit QPK(dBμV/m)

Temperature:	23.5 ℃	**Relative Humidity:**	42%
Test Voltage:	DC 12V		
Ant. Pol.	Vertical		
Test Mode:	88.1MHz		
Remark:	Only worse case is reported.		

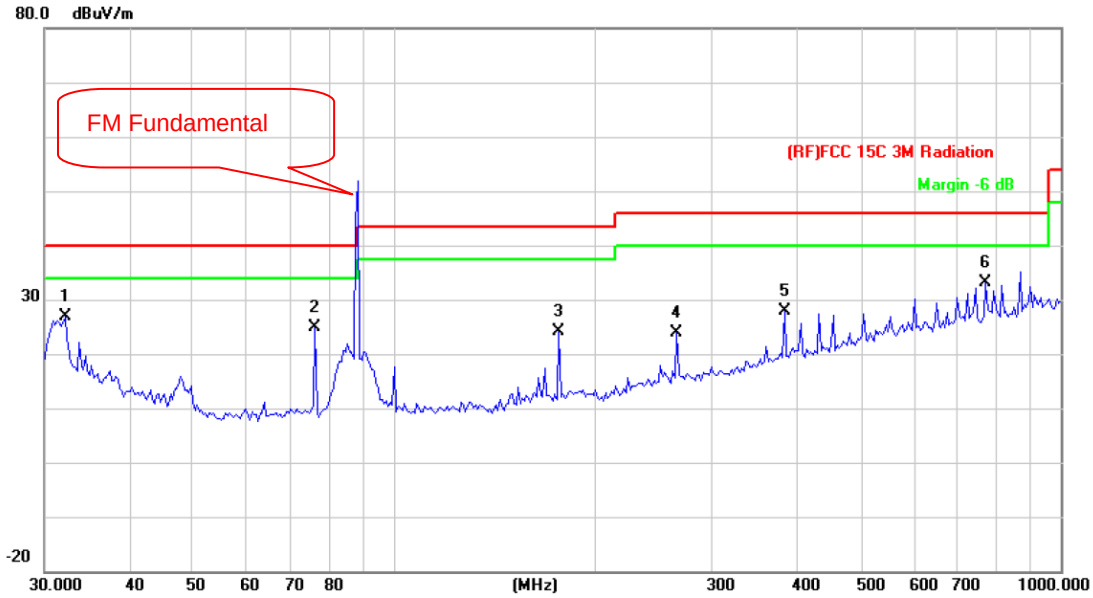

No.	Mk.	Freq.	Reading Level	Correct Factor	Measure-ment	Limit	Over	
		MHz	dBuV	dB/m	dBuV/m	dBuV/m	dB	Detector
1		32.1795	41.50	-14.57	26.93	40.00	-13.07	peak
2		76.2442	47.80	-22.82	24.98	40.00	-15.02	peak
3		176.8878	44.35	-20.23	24.12	43.50	-19.38	peak
4		265.6757	40.84	-16.93	23.91	46.00	-22.09	peak
5		385.2805	40.75	-12.98	27.77	46.00	-18.23	peak
6	*	771.4486	39.45	-6.20	33.25	46.00	-12.75	peak

Remark:
1. Corr. = Antenna Factor (dB/m) + Cable Loss (dB)
2. QuasiPeak (dBμV/m)= Corr. (dB/m)+ Read Level (dBμV)
3. Margin (dB) = QuasiPeak (dBμV/m)-Limit QPK(dBμV/m)

Attachment B--Fundamental and Band Edge Test Data

Temperature:	23.5 ℃	**Relative Humidity:**	42%
Test Voltage:	DC 12V		
Ant. Pol.	Horizontal		
Test Mode:	88.1MHz		
Remark:	Peak Value＜Average Limit, So only show the Peak Value		

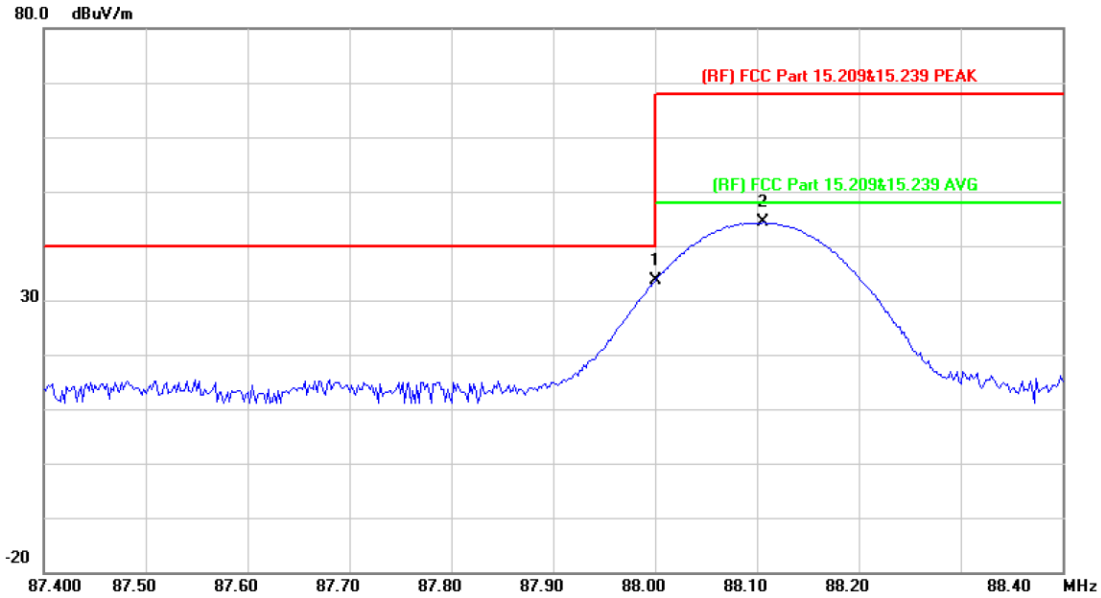

No.	Mk.	Freq.	Reading Level	Correct Factor	Measure-ment	Limit	Over	
		MHz	dBuV	dB/m	dBuV/m	dBuV/m	dB	Detector
1	*	88.0000	55.57	-21.98	33.59	40.00	-6.41	peak
2		88.1059	66.24	-21.97	44.27	67.96	-23.69	peak

Remark:
1. Corr. = Antenna Factor (dB/m) + Cable Loss (dB)
2. Peak/AVG (dBμV/m)= Corr. (dB/m)+ Read Level (dBμV)
3. Margin (dB) = Peak/AVG (dBμV/m)-Limit PK/AVG(dBμV/m)

Temperature:	23.5 ℃	**Relative Humidity:**	42%
Test Voltage:	DC 12V		
Ant. Pol.	Vertical		
Test Mode:	88.1MHz		
Remark:	Peak Value＜Average Limit, So only show the Peak Value		

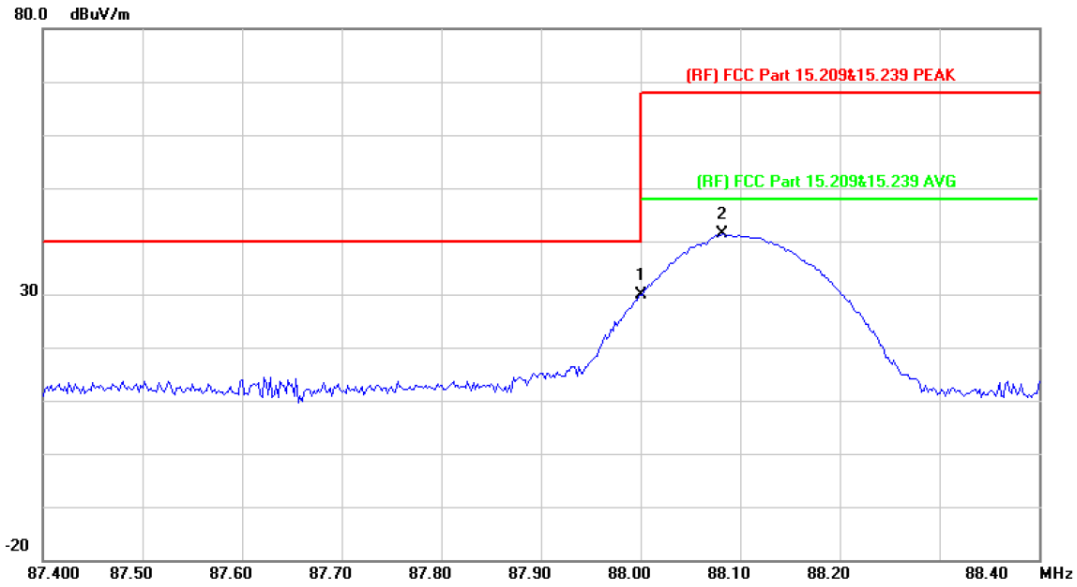

No.	Mk.	Freq.	Reading Level	Correct Factor	Measure-ment	Limit	Over	
		MHz	dBuV	dB/m	dBuV/m	dBuV/m	dB	Detector
1	*	88.0000	51.76	-21.98	29.78	40.00	-10.22	peak
2		88.0819	63.25	-21.98	41.27	67.96	-26.69	peak

Remark:
1. Corr. = Antenna Factor (dB/m) + Cable Loss (dB)
2. Peak/AVG (dBμV/m)= Corr. (dB/m)+ Read Level (dBμV)
3. Margin (dB) = Peak/AVG (dBμV/m)-Limit PK/AVG(dBμV/m)

Temperature:	23.5 ℃	**Relative Humidity:**	42%
Test Voltage:	DC 12V		
Ant. Pol.	Horizontal		
Test Mode:	98.1MHz		
Remark:	Peak Value＜Average Limit, So only show the Peak Value		

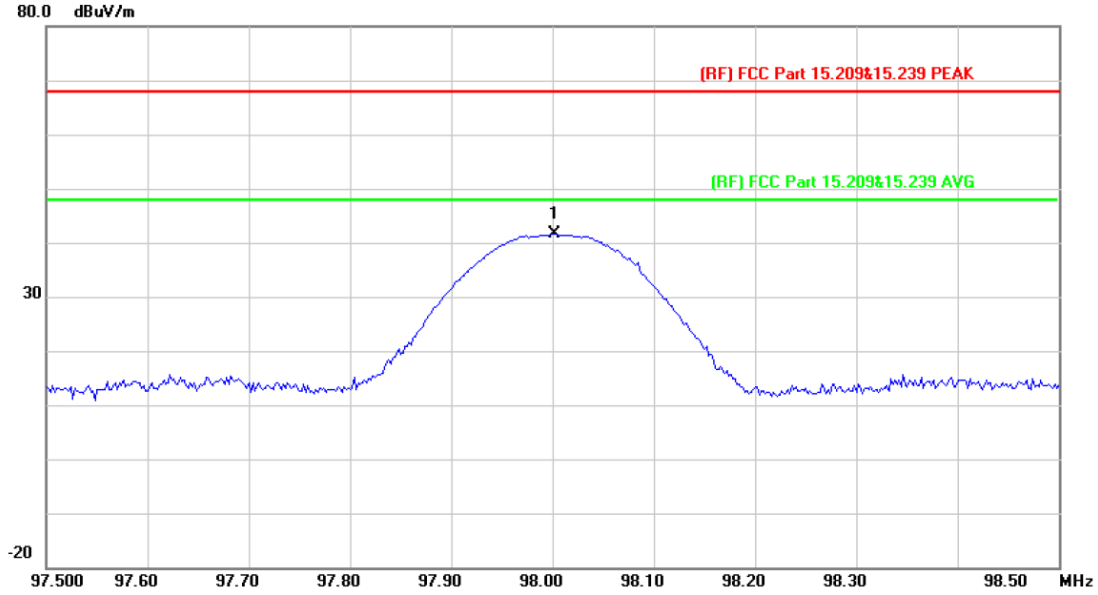

No.	Mk.	Freq.	Reading Level	Correct Factor	Measure-ment	Limit	Over	
		MHz	dBuV	dB/m	dBuV/m	dBuV/m	dB	Detector
1	*	98.0019	63.46	-21.92	41.54	67.96	-26.42	peak

Remark:
1. Corr. = Antenna Factor (dB/m) + Cable Loss (dB)
2. Peak/AVG (dBμV/m)= Corr. (dB/m)+ Read Level (dBμV)
3. Margin (dB) = Peak/AVG (dBμV/m)-Limit PK/AVG(dBμV/m)

Temperature:	23.5 ℃	**Relative Humidity:**	42%
Test Voltage:	DC 12V		
Ant. Pol.	Vertical		
Test Mode:	98.1MHz		
Remark:	Peak Value＜Average Limit, So only show the Peak Value		

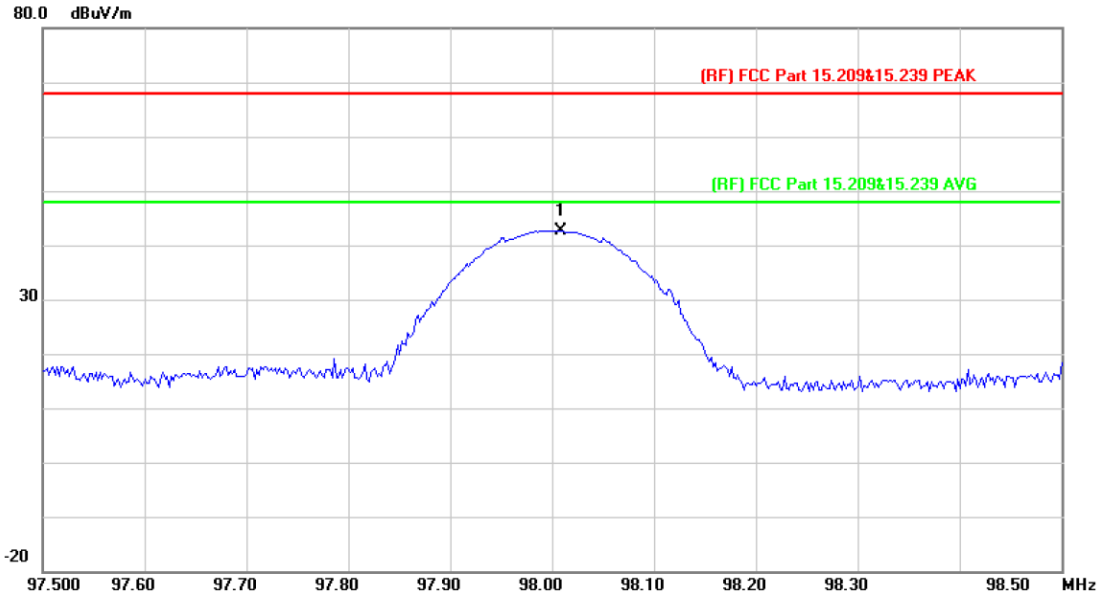

No.	Mk.	Freq.	Reading Level	Correct Factor	Measure-ment	Limit	Over	
		MHz	dBuV	dB/m	dBuV/m	dBuV/m	dB	Detector
1	*	98.0079	64.55	-21.92	42.63	67.96	-25.33	peak

Remark:
1. Corr. = Antenna Factor (dB/m) + Cable Loss (dB)
2. Peak/AVG (dBμV/m)= Corr. (dB/m)+ Read Level (dBμV)
3. Margin (dB) = Peak/AVG (dBμV/m)-Limit PK/AVG(dBμV/m)

Temperature:	23.5 ℃	**Relative Humidity:**	42%
Test Voltage:	DC 12V		
Ant. Pol.	Horizontal		
Test Mode:	107.9MHz		
Remark:	Peak Value＜Average Limit, So only show the Peak Value		

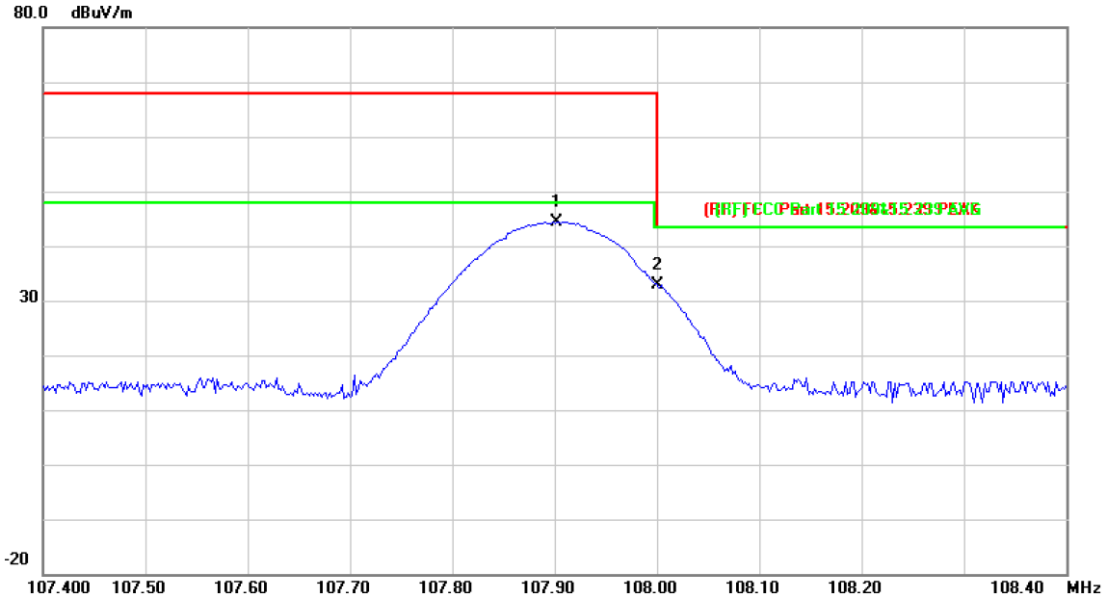

No.	Mk.	Freq.	Reading Level	Correct Factor	Measure-ment	Limit	Over	
		MHz	dBuV	dB/m	dBuV/m	dBuV/m	dB	Detector
1		107.9020	66.65	-22.23	44.42	67.96	-23.54	peak
2	*	108.0000	55.00	-22.23	32.77	43.50	-10.73	peak

Remark:
1. Corr. = Antenna Factor (dB/m) + Cable Loss (dB)
2. Peak/AVG (dBμV/m)= Corr. (dB/m)+ Read Level (dBμV)
3. Margin (dB) = Peak/AVG (dBμV/m)-Limit PK/AVG(dBμV/m)

Temperature:	23.5 ℃	**Relative Humidity:**	42%
Test Voltage:	DC 12V		
Ant. Pol.	Vertical		
Test Mode:	107.9MHz		
Remark:	Peak Value＜Average Limit, So only show the Peak Value		

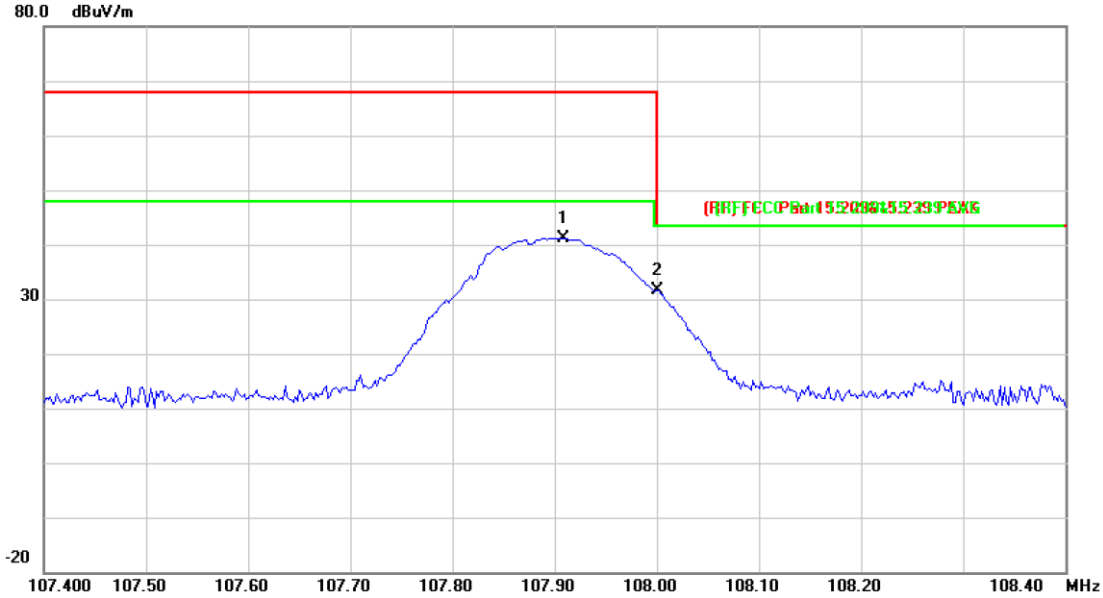

No.	Mk.	Freq.	Reading Level	Correct Factor	Measure-ment	Limit	Over	
		MHz	dBuV	dB/m	dBuV/m	dBuV/m	dB	Detector
1		107.9080	63.42	-22.23	41.19	67.96	-26.77	peak
2	*	108.0000	53.79	-22.23	31.56	43.50	-11.94	peak

Remark:
1. Corr. = Antenna Factor (dB/m) + Cable Loss (dB)
2. Peak/AVG (dBμV/m)= Corr. (dB/m)+ Read Level (dBμV)
3. Margin (dB) = Peak/AVG (dBμV/m)-Limit PK/AVG(dBμV/m)

Attachment C-- Bandwidth Data

Frequency (MHz)	20 dB Bandwidth (kHz)	Limits (kHz)	Result
88.1	145.4643	200	PASS
98.1	144.9538		PASS
107.9	147.6783		PASS

88.1 MHz

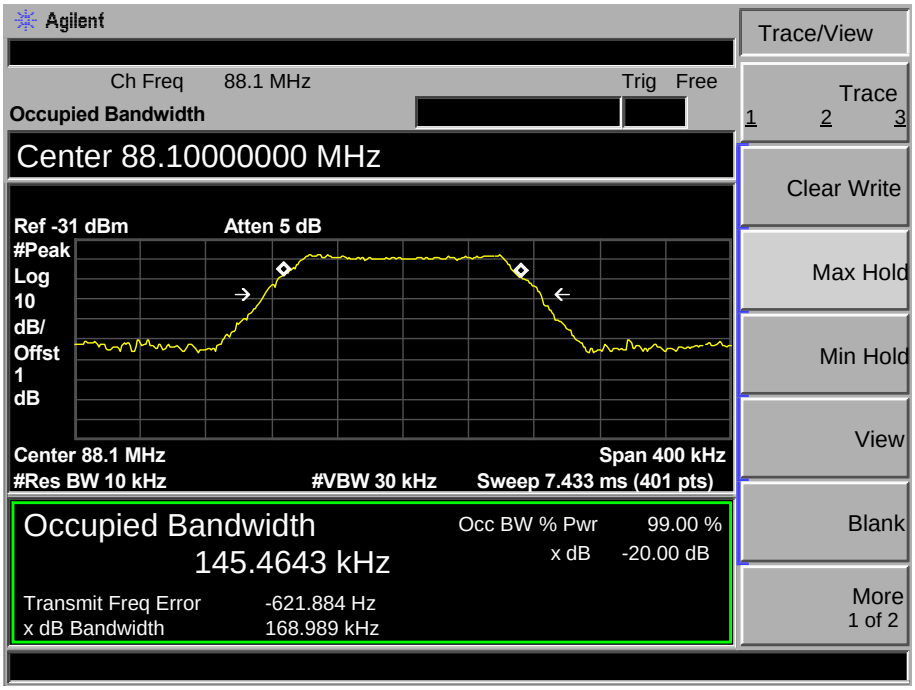

98.1 MHz

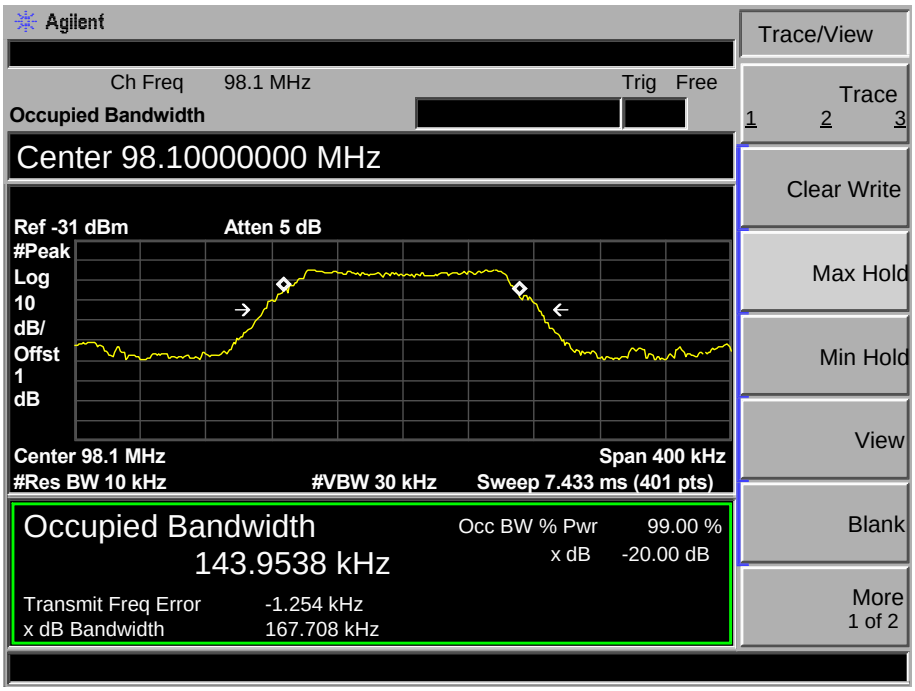

107.9 MHz

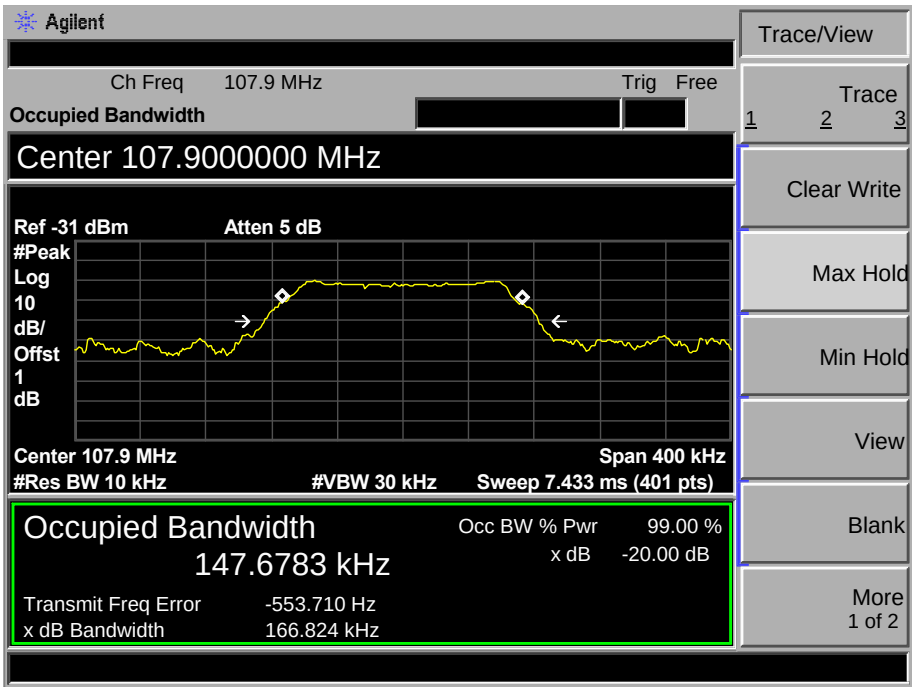

-----END OF REPORT-----