Wireless Dimmable Controller

User Guide

HLC734

1 Product Introduction

HLC734-Z is a kind of zigbee dimmable controller for UFO highbay. The controller is based on HA1.2 protocol, embedded power metering function. And the controller outputs 1-10V dimmable signal and AC. So it works with 0/1-10V or 0-10V dimmable LED driver on the market. There is a sensor interface for sensor input. The controller is a part of iLightsIn Pro smart lighting system. It gets the command from gateway, touch panel or sensor directly.

2 Wiring Connection

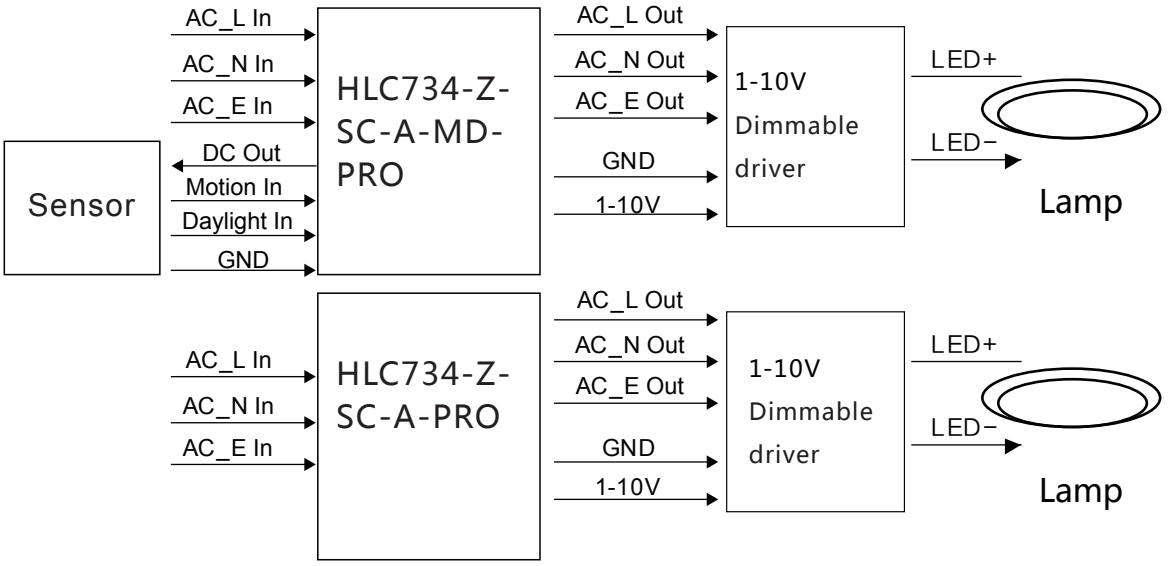

3 Restore Factory Setting

Step1: AC power on and then off the device within 2 seconds (via circuit breaker);
Step2: Repeat step1 for 4 times;
Step3: Power on the device follow up with step2 , light will flash for 4 times and then keep on,
the light is set to factory settings. All binding records are cleared.
Step4: The brightness of the light will change to 30% if this device joined network successfully.

4 Model definition

Model name	Model definition
HLC734-Z-SC-A-PRO	Basic version
HLC734-Z-SC-A-MD-PRO	Motion&daylight input version
HLC734-Z-SC-A-MB-PRO	Binding motion input version

5 Environment and Electrical parameters

Input	AC100-277Vac
Output 1-10V	AC100-277Vac 1-10V
1-10V Max current	15mA
Relay Max current	5A
Waterproof	IP65
Pull	30pound
Operating Temperature	-40°C ~70°C

This device complies with part 15 of the FCC Rules. Operation is subject to the following two conditions: (1) this device may not cause harmful interference, and (2) this device must accept any interference received, including interference that may cause undesired operation.

Changes or modifications not expressly approved by the party responsible for compliance could void the user's authority to operate the equipment.

NOTE: This equipment has been tested and found to comply with the limits for a Class B digital device, pursuant to Part 15 of the FCC Rules. These limits are designed to provide reasonable protection against harmful interference in a residential installation. This equipment generates, uses and can radiate radio frequency energy and, if not installed and used in accordance with the instructions, may cause harmful interference to radio communications. However, there is no guarantee that interference will not occur in a particular installation.

If this equipment does cause harmful interference to radio or television reception,which can be determined by turning the equipment off and on, the user is encouraged to try to correct the interference by one or more of the following measures:

-- Reorient or relocate the receiving antenna.

-- Increase the separation between the equipment and receiver.

-- Connect the equipment into an outlet on a circuit different from that to which the receiver is connected.

-- Consult the dealer or an experienced radio/TV technician for help.

To maintain compliance with FCC’s RF Exposure guidelines, This equipment should be installed and operated with minimum distance between 20cm the radiator your body: Use only the supplied antenna.

FCC ID: 2AJ7E-HLC734

CE