FHSHB-347-40W-D

High-Bay Emergency LED Driver

- Universal Voltage: 100-347V~
- For wiring to the LED Driver's input
- High voltage output 170VDC
- Aux output: 12VDC, 0.2A
- Built-in integrated junction box
- Output Wattage: 40W constant power
- Self-Diagnostic
- CEC Title20 compliance
- Remote control distance up to 98ft
- IP 65

General Specifications

Input Voltage / Frequency	100-347V~, 50/60Hz
Input Current	0.2A Max.
Input Power	12W Max.
Load Input Power	320W Max. when using 0-10V dimming; 40W Max. when 0-10V dimming is not used. The luminaire driver power at min. dimming needs to be less than the EM power 40W. Please test the compatibility of the FHSHB-347-40W-D with the intended luminaire before installation.
Output Type	Non-Class 2
Uout	180V
Output Power	40W
Output Voltage	170VDC
Vaux	12VDC, 0. 2A
Number of Output Channels	1Channel
Input Surge Protection	Line - Neutral 3kV, Line & Neutral - Ground 3kV
Protections	Output Open Protection Output Overload Protection Output Short Circuit Protection Output Temperature Protection
Emergency Mode	90 Minutes Min
RFI/EMI	FCC Part15A
Ambient Operating Temperature Rang	0°C To 50°C (32°F To 122°F)
Sound Rating	A
Battery Type	Lithium
Battery Voltage	18V
Pack Capacity	5000mAh
Battery Rating	90Wh
Battery Recharge Time	24 Hours
Battery Discharge Time	Min 1.5 Hours
Remote Control Distance	98' (30m) Max.
Remote Controller Battery Model	23A
Remote Controller Battery Voltage	12V
Remote Controller Battery Quantity	1pc
Application Environment	Wet
Service Life	50,000 hours
Warranty	5 years
Standard	UL924, CSA C22.2 No.141 CEC, Title 20, UN 38.3 RoHS, IP65

FHSHB-347-40W-D

Mechanical Data

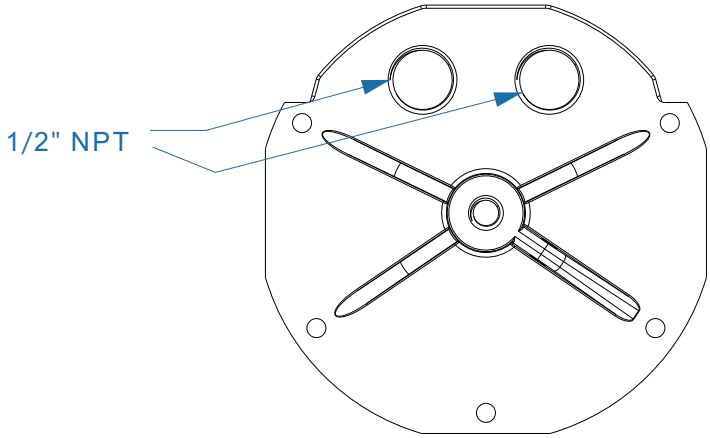

Overall Dimensions	
Diameter	5.47" (139mm)
Height	6.80" (173mm)

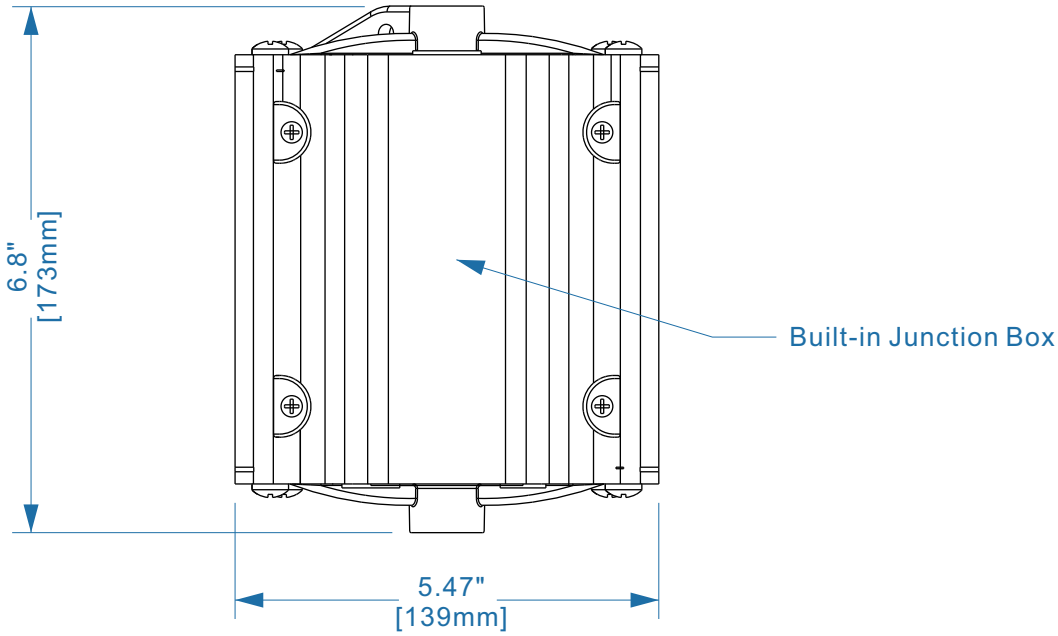

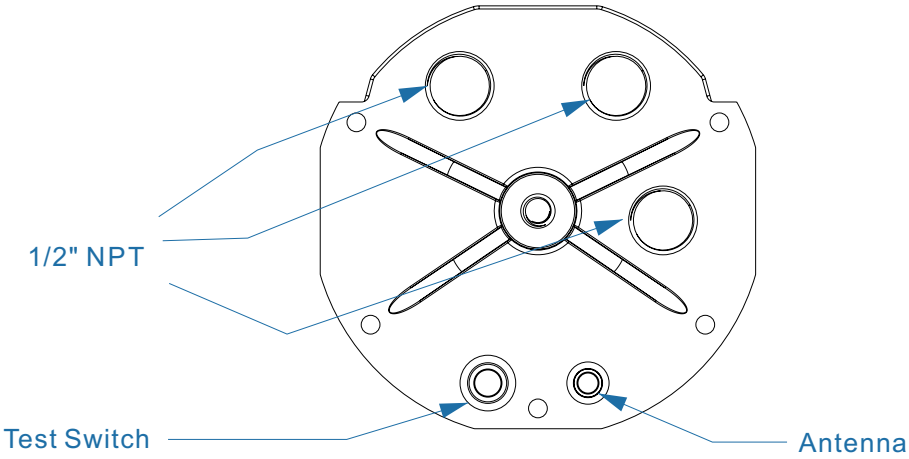

FHSHB-347-40W-D

Installation Diagram

*Note: This product is not compatible with all luminaires, please conduct a compatibility test before use.

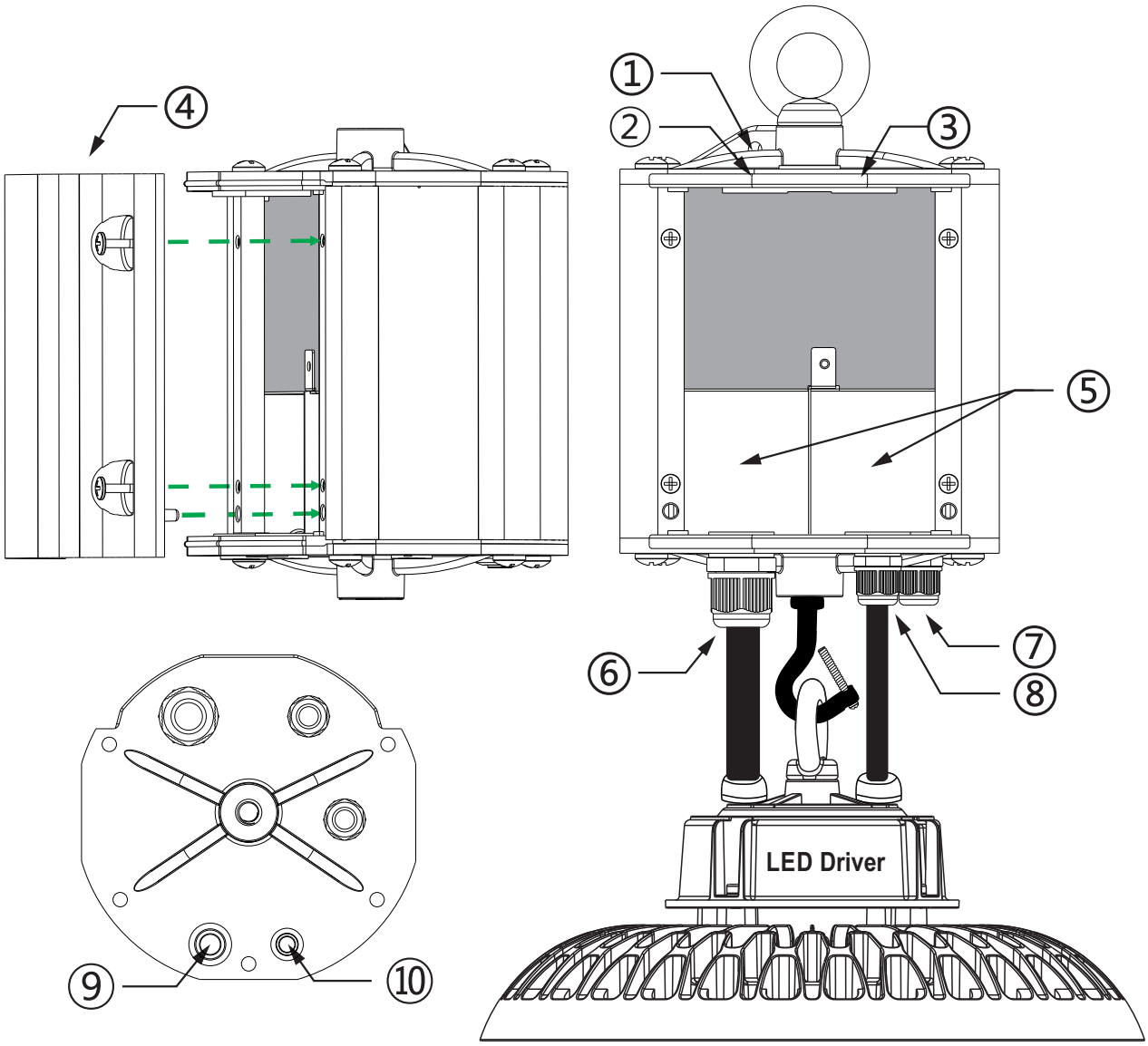

① Safety Rope Interface	⑥ LED Driver Input Wires Interface
② AC Input Wires Interface	⑦ Sensor Wires Interface
③ Dimming Wires Interface	⑧ LED Driver Dimming Wires Interface
④ Integrated Junction Box Cover	⑨ Charge Indicator & Test Switch
⑤ Junction Box	⑩ Reomote Control Antenna

FHSHB-347-40W-D

Accessories

A

11x pcs of Wire nuts

B

1x pcs of safety rope
2x pcs of chain link connector

C

1x pcs of M10 Hanging Hook Bolt
1x pcs of M10 Hanging Ring Bolt

D

1x pcs of remote control
1x pcs of Antenna

E

2x pcs of connectors for wire diameter 0.118-0.248" (3-6.3mm)
2x pcs of connectors for wire diameter 0.196-0.393" (5-10mm)

FHSHB-347-40W-D

Wiring Diagram

Note: 0-10V dimming on luminaire driver is needed and must be connected to FHSHB-347-40W-D if the luminaire power is over 40W.

Note: This product is not compatible with all luminaires, please conduct a compatibility test before use.

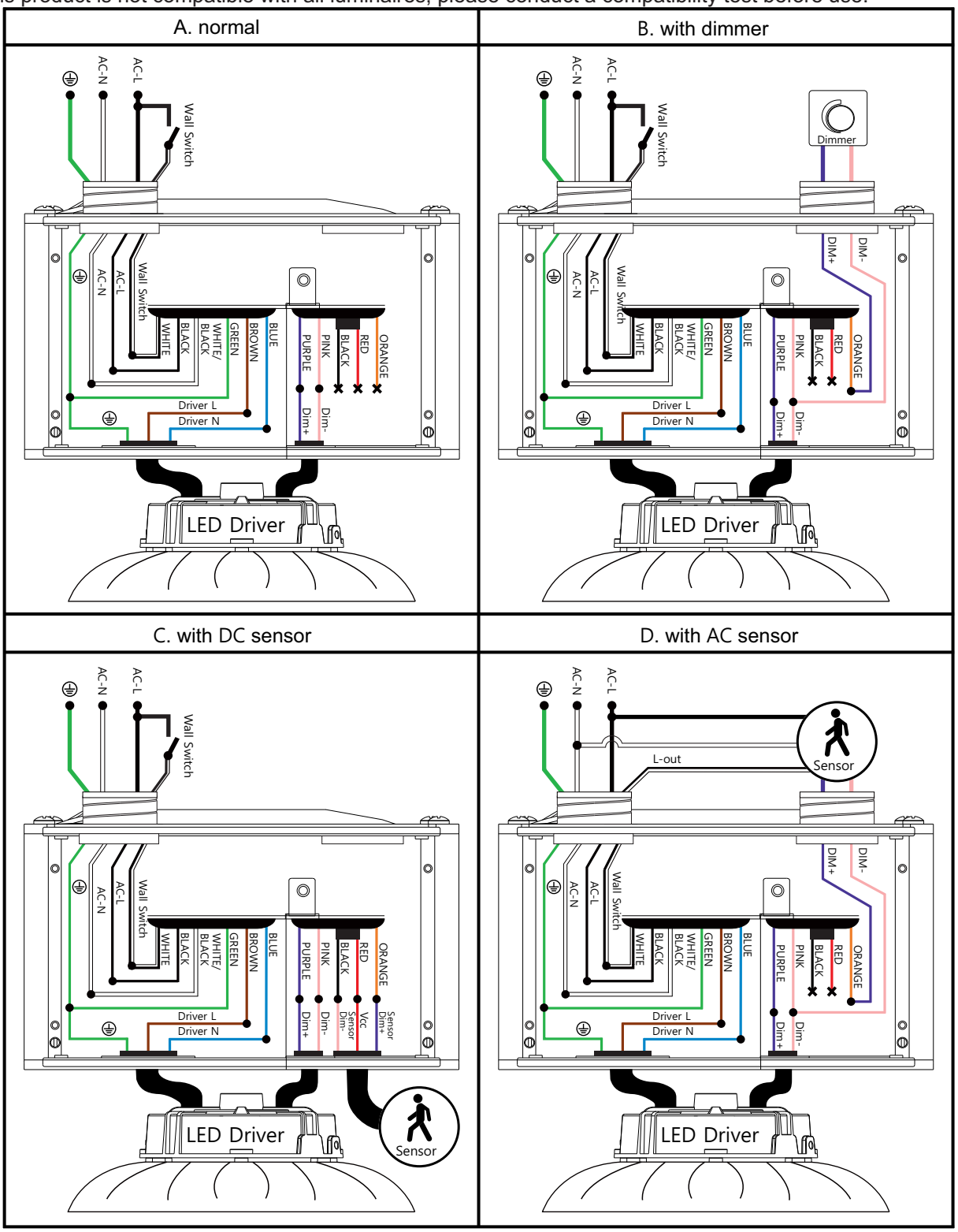

FHSHB-347-40W-D

Self-Diagnostic Instructions / Operation

The emergency LED driver will conduct a self-test for thirty(30) seconds every thirty(30) days; and a ninety(90) minutes self-test every 12 months. After every self-test, the LED indicator light will indicate a status signal. Check indicator status chart below to diagnose the status signal.

Test Switch Indicator Status

Mode	Test Switch on EM Driver	Wireless Remote	Indicator Status	Comment & Solutions
AC MODE (1)	NO Press	NO Press	ON(no flashing)	Emergency led driver is charging
AC MODE (2)	Press once	Press "Button A" once	2s ON and 2s OFF (slow flashing)	Emergency led driver is conducting a 30s short-term emergency test. After 30 seconds, it will automatically restore to normal charging mode
AC MODE (3)	Press twice (2s) in sequence	Press "Button B" once	2s ON and 2s OFF (slow flashing)	Emergency led driver is conducting a long-term emergency test until battery is fully discharged
EMERGENCY MODE	NO Press	NO Press	2s ON and 2s OFF (slow flashing)	Emergency led driver is conducting a long-term emergency test until battery is fully discharged
ABNORMAL	When flashes (50ms) ON and (50ms) OFF fast or goes off, the emergency backup pack is abnormal. Contact the manufacturer.			
WARNING Risk of Electric Shock	**Note: Battery shall be disconnected before installation, maintenance, storage or shipping.**			

EM Test:
Press the test button on EM driver or on the remote control to enter EM mode in normal AC powered.

Turn OFF EM Output:
Press test button on EM driver or on the remote control once during EMERGENCY MODE (NO AC Power) to turn off EM output. This is useful for producte environment to turn off the EM output once a luminaire has completed functionality testing.

Remote Control

One remote control can control with multiple FHSHB-347-40W-D emergency drivers, there's no need to pair, the control can work within the max. distance.

Max. control distance 98ft *

During AC mode:
Press "Button A" once for a 30s short-term emergency test;
Press "Button B" once for a long-term emergency test until the battery is fully discharged.
During Emergency mode (no AC power):
Press "Button A" or "Button B" to turn off the emergency output.

* **NOTE**: The max. remote control distance could be limited by different environments.

FHSHB-347-40W-D

INSTALLATION MANUAL

!!! IMPORTANT SAFEGUARDS !!!

WHEN USING ELECTRICAL EQUIPMENT, BASIC SAFETY PRECAUTION SHOULD ALWAYS BE FOLLOWED, INCLUDING THE FOLLOWING

READ AND FOLLOW ALL SAFETY INSTRUCTION

1. **CAUTION-** This **FHSHB** provides more than one power supply output source. To reduce the risk of electrical shock, disconnect both normal and emergency source by turning o the A.C. branch circuit.
2. **CAUTION-** Servicing of this equipment should be performed by qualified personnel only.
3. **CAUTION-** Do not attempt to service the battery. A sealed, no-maitenence battery is used that is not field replaceable. Replace the entire unit when necessary.
4. **CAUTION-** The use of accessory equipment not recommended by the manufacturer may cause an unsafe condition, void warranty, and result in non-compliance with UL specifications.
5. **CAUTION-** The **FHSHB** requires an un-switched AC power source of **100-347VAC** ,50/60Hz. Installer must confirm that fixtures input voltage. covered 120VAC before installation. It will supply power under an output voltage of 170VDC in emergency mode for at least 90 minutes.
6. **CAUTION-** Battery pack should be charged for 24 hours every 6 months during storage.
7. Battery in this unit may not be fully charged. After electricity is connected to the unit for at least 24 hours, then normal operation of this unit should take effect.
8. For use in 0℃ minimum, 50℃ maximum ambient temperatures. Suitable for use in wet locations and plenum spaces.
9. Flexible mental conduit is optional, depend on installation environment.
10. The **FHSHB** should be mounted in locations and at heights where it will not readily be subjected to tampering by unauthorized personnel.
11. Do not use this equipment for anything other than its intended use. Equipment only use for LED Lighting emergency backup.
12. Do not mount near gas or electric heaters. Do not let power supply cords touch hot surfaces.
13. Do not make or leave any other open holes in the wiring enclosure or electrical component enclosure during installation.
14. This fixture is for use with grounded, UL Listed, this model can use in wet location. Not for use in heated air outlets or hazardous locations.
15. The emergency driver have battery inside,forbidden for insulation voltage(I/P-O/P) test.
16. Equipment should be mounted in locations and at heights where it will not be subjected to tampering by unauthorized personnel.
17. The equipment is intended for ordinary locations and for permanent installation into one or more Listed emergency luminaires.
18. Suitable for minimum 10W LED lamp.
19. Maximum installation height: 28.5 feet.
20. Changes or modifications not expressly approved by the party responsible for compliance could void the user's authority to operate the equipment.
21. This device complies with Part 15 of the FCC Rules. Operation is subject to the following two conditions: (1) this device may not cause harmful interference, and (2) this device must accept any interference received, including interference that may cause undesired operation.
22. This equipment has been tested and found to comply with the limits for a Class B digital device, pursuant to part 15 of the FCC Rules. These limits are designed to provide reasonable protection against harmful interference in a residential installation. This equipment generates, uses and can radiate radio frequency energy and, if not installed and used in accordance with the instructions, may cause harmful interference to radio communications. However, there is no guarantee that interference will not occur in a particular installation. If this equipment does cause harmful interference to radio or television reception, which can be determined by turning the equipment off and on, the user is encouraged to try to correct the interference by one or more of the following measures:
    —Reorient or relocate the receiving antenna.
    —Increase the separation between the equipment and receiver.
    —Connect the equipment into an outlet on a circuit different from that to which the receiver is connected.
    —Consult the dealer or an experienced radio/TV technician for help.

LUMEN OUTPUT DURING EMERGENCY OPERATION

The luminaire rated data and maximum mounting height can be found as follows:

1. Determine the fixture efficacy under normal AC operation, based on fixture manufacturer published data in lumens per watt (LM/W).
2. Reference DLC QPL (www.designlights.org) and Energy Star QPL (www.energystar.gov) for rated data on fixture efficacy. If fixture is not found on DLC or Energy Star Qualified Product List , contact fixture manufacturer.
3. Multiply ***fixture LM/W*** by ***rated output power of emergency pack*** Example 'model FHSHB347-40W-D' is 40 ***W*** × 100 ***LM/W*** = 4000 Lumens

This product has been designed and tested to compatible with most of led drivers in the market. However, compatibility cannotbe guaranteed with all current and future LED drivers or fixtures. So compatibility testing of the end-use system is suggested.
Please contact the factory with any questions.

Caution: Before Installation, Make Certain The A.C. Power is Off !

STEP 1: ASSEMBLING NOTICE

> Select a suitable location on the hangable device.
> The Maximum weight of lighting fixture should be less than 20kg.
> Turn off the AC power before installing.
> Assembling the EM backup with the Safety Rope with the chain link connector.
> Please use waterproof connectors in position AC input wire interface and Dimming wire interface for application in wet location.

SAVE THESE INSTRUCTIONS

FHSHB-347-40W-D

INSTALLATION MANUAL

!!! IMPORTANT SAFEGUARDS !!!	WHEN USING ELECTRICAL EQUIPMENT, BASIC SAFETY PRECAUTION SHOULD ALWAYS BE FOLLOWED, INCLUDING THE FOLLOWING

STEP 2: INSTALLING

> Install the ring M10 Hanging Ring Bolt to the EM backup and fix it with screw.
> Install the M10 Hanging Hook Bolt to the EM backup and fix it with screw.
> Install the UFO high bay to the Hanging Hook of EM backup and tighten the screws.

STEP 3: WIRING

> Before wiring, make sure safety rope is securely locked and make sure all the screws are tight.
> Open the cover of junction box.
> Select the appropriate wiring diagram to connect the emergency driver to the AC driver. For other diagrams, consult the manufacturer.
> The voltage input to the dimmable wires (DIM+, DIM-) of emergency LED driver must less than 20Vdc.
> Using wire nuts to cover un-used wires and make sure all connections are in accordance with the NEC and any local regulations.

STEP 4: TESTING

> After wiring is complete, apply A.C. power. Check if the indicator light lights or not , which will indicate the battery's charging situation.
> The battery in this unit may not be fully charged. A short-term discharge test may be conducted after the EMUFO has been charging for 1 hour.

Charge for 24 hours before conducting a long-term discharge test.

SAVE THESE INSTRUCTIONS

FHSHB-347-40W-D

Guidelines

Grounding
- The Emergency Driver must be grounded by means of the grounding wire.

Over temperature protection
- The Fulham Hotspot LED drivers are protected against thermal overload. If the temperature limit is exceeded, the output current is reduced.

Load
- Fulham High-Bay Emergency LED drivers are designed to connect to normal LED driver's input.

Short-circuit protection
- In case of a short circuit the LED driver switches to protection mode. After the removal of the short-circuit the LED driver will recover automatically.

No-load Operation
- In no-load operation the output voltage will not exceed the specified open circuit output voltage.

Hot Swapping
- This driver does not support hot swapping.

Remote Mounting
- Up to 15ft with 18AWG. Contact Fulham for higher remoute distance.

Battery Maintenance
- In order to maintain proper operation and warranty coverage, the battery must be recharged once per year prior to installation.

Warranty
- Reference Fulham's limited Warranty: https://cdn.fulham.com/PDFs/Limited-Warranty.pdf

FHSHB-347-40W-D

Part Number Matrix

FHS	HB	-	347	-	40W	-	D
LED Driver	Application		Input Voltage		EM Power		Case Type
FHS = HotSpot LED EM Driver	HB= High-Bay		347= 100V-347V		40= 40W		D = Cylinder

Product Image:

Packaging

Master Carton

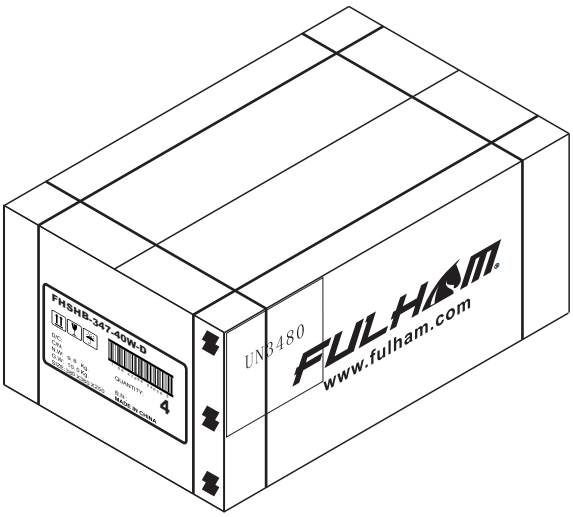

OUTER DIMENSION		
L	W	H
14.96” (380mm)	14.96”(380mm)	9.84” (250mm)

Net Weight	Gross Weight	QUANTITY
21.61lbs. (9.8kg.)	23.15lbs. (10.5kg)	4pcs.