LEIYON

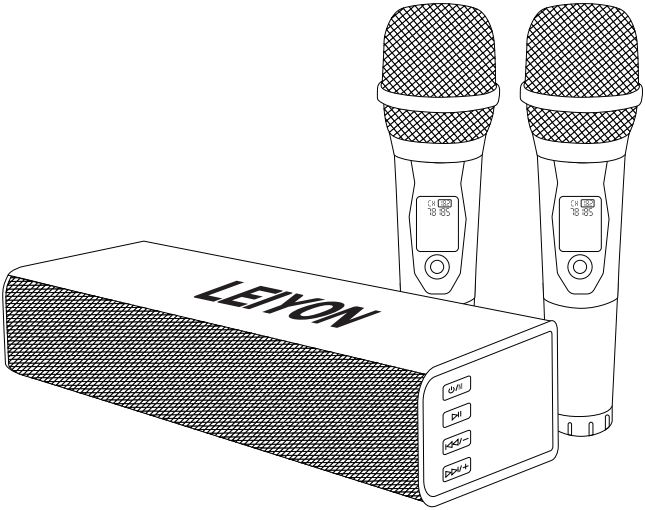

LY-S228

All-In-One Bluetooth Karaoke System

OWNER'S MANUAL

WELCOME

And thank you for purchasing KaraokePal from VocoPro. Along with quality products our commitment to customer satisfaction means we have technical support professionals ready to assist you. Be sure to visit our website: www.vocopro.com for the latest information on new products.

Legal Disclaimer

All rights reserved. Information, specifications, diagrams, images, and instructions herein are subject to change without notice. VocoPro Products, logo and identifying product names and numbers herein are trademarks of VocoPro. Copyright protection claimed includes all forms and matters of copyrightable materials and information now allowed by statutory or judicial law or hereinafter granted. Product names used in this document may be trademarks or registered trademarks of their respective companies and are hereby acknowledged. All non-VocoPro Products, brands and product names are trademarks or registered trademarks of their respective companies.

VocoPro hereby disclaims any and all liabilities for property, equipment, building, and electrical damages, injuries to any persons, and direct or indirect economic loss associated with the use or reliance of any information contained within this document, and/or as a result of the improper, unsafe, insufficient and negligent assembly, installation, rigging, and operation of this product.

Purchase Info: Please record the model number and serial number below, for easy reference, in case of loss or theft. These numbers are located on the packaging the item came in. *This is not considered a receipt. Please keep a copy of your purchase receipt, provided by the dealer, in your records. A receipt is required for all warranty work.*

Model Number

Serial Number

Date of Purchase

Place of Purchase

CALIFORNIA PROP 65 WARNING

⚠ **WARNING:** Cables, Cable Assemblies, and Printed Circuit Boards can expose you to chemicals including lead and lead compounds which are known to the State of California to cause cancer and birth defects or other reproductive harm. For more information, go to **www.P65Warnings.ca.gov**

CAUTION

RISK OF SHOCK

CAUTION: To reduce the risk of electric shock, do not remove cover (or back). No user-serviceable parts inside. Only refer servicing to qualified service personnel.

Explanation of Graphical Symbols

The lightning flash & arrowhead symbol, within an equilateral triangle, is intended to alert you to the presence of danger.

The exclamation point within an equilateral triangle is intended to alert you to the presence of important operating and servicing instructions.

WARNING: To reduce the risk of fire or electric shock, do not expose unit to rain or moisture.

This device complies with Part 15 of the FCC rules. Operation is subject to the condition that this device may not cause harmful interference.

FCC license may be required

1. Read Instructions - All the safety and operating instructions should be read before the appliance is operated.

2. Retain Instructions - The safety and operating instructions should be retained for future reference.

3. Heed Warnings - All warnings on the appliance and in the operating instructions should be adhered to.

4. Follow Instructions - All operating and use instructions should be followed.

5. Attachments - Do not use attachments not recommended by the product manufacturer as they may cause hazards.

6. Water and Moisture - Do not use this unit near water. For example, near a bathtub or in a wet basement and the like.

7. Carts and Stands - The appliance should be used only with a cart or stand that is recommended by the manufacturer.

7 A. An appliance and cart combination should be moved with care. Quick stops, excessive force, and uneven surfaces may cause an overturn.

8. Ventilation - The appliance should be situated so its location does not interfere with its proper ventilation. For example, the appliance should not be situated on a bed, sofa, rug, or similar surface that may block the ventilation slots.

9. Heat - The appliance should be situated away from heat sources such as radiators, heat registers, stoves, or other appliances (including amplifiers) that produce heat.

10. Power Sources - The appliance should be connected to a power supply only of the type described in the operating instructions or as marked on the appliance.

11. Grounding or Polarization - Precautions should be taken so that the grounding or polarization means of an appliance is not defeated.

12. Power-Cord Protection - Power-supply cords should be routed so that

they are not likely to be walked on or pinched by items placed upon or against them, paying particular attention to cords at plugs, convenience receptacles, and the point where they exit from the appliance.

13. Cleaning - Unplug this unit from the wall outlet before cleaning. Do not use liquid cleaners or aerosol cleaners. Use a damp cloth for cleaning.

14. Power lines - An outdoor antenna should be located away from power lines.

15. Non-use Periods - The power cord of the appliance should be unplugged from the outlet when left unused for a long period of time.

16. Object and Liquid Entry - Care should be taken so that objects do not fall and liquids are not spilled into the enclosure through openings.

17. Damage Requiring Service - The appliance should be serviced by qualified service personnel when:

- The power supply cord or plug has been damaged; or
- Objects have fallen into the appliance; or
- The appliance has been exposed to rain; or
- The appliance does not appear to operate normally or exhibits a marked change in performance; or
- The appliance has been dropped, or the enclosure damaged.

18. Servicing - The user s`hould not attempt to service the appliance beyond that described in the operating instructions. All other servicing should be referred to qualified service personnel.

Note: To CATV system installer's (U.S.A.): This reminder is provided to call the CATV system installer's attention to Article 820-40 of the NEC that provides guidelines for proper grounding and, in particular, specifies that the cable ground shall be connected as close to the point of cable entry as practical.

1. IMPORTANT NOTICE: DO NOT MODIFY THIS UNIT!: This product, when installed as indicated in the instructions contained in this manual, meets FCC requirements. Modifications not expressly approved by Vocopro may void your authority, granted by the FCC, to use this product.

2. IMPORTANT: When connecting this product to accessories and/or another product use only high quality shielded cables. Cable(s) supplied with this product MUST be used. Follow all installation instructions. Failure to follow instructions could void your FCC authorization to use this product in the U.S.A.

3. NOTE: This product has been tested and found to comply with the requirements listed in FCC Regulations, Part 15 for Class “B” digital devices. Compliance with these requirements provides a reasonable level of assurances that your use of this product in a residential environment will not result in harmful interference with other electronic devices. This equipment generates/uses radio frequencies and, if not installed and used according to the instructions found in the owner’s manual, may cause interference harmful to the operation of other electronic devices. Compliance with FCC regulations does not guarantee that interference will not occur in all installations. If this product is found to be the source of interference, which can be determined by turning the unit “Off” and “On”, please try to eliminate the problem by using one of the following measures:

Relocate either this product or the device that is being affected by the interference.

Use power outlets that are on different branch (circuit breaker or fuse) circuits or install AC line filter(s).

In the case of radio or TV interference, relocate/reorient the antenna. If the antenna lead-in is 300-ohm ribbon lead, change the lead-in to coaxial type cable.

If these corrective measures do not produce satisfactory results, please contact your local retailer authorized to distribute Vocopro products. If you can not locate the appropriate retailer, please contact Vocopro, 1728 Curtiss Court,
La Verne, CA 91750.

CAUTION:

READ THIS BEFORE OPERATING YOUR UNIT

1. To ensure the finest performance, please read this manual carefully. Keep it in a safe place for future reference.

2. Install your unit in a cool, dry, clean place - away from windows, heat sources, and too much vibration, dust, moisture or cold. Avoid sources of hum (transformers, electric motors). To prevent fire or electrical shock, do not expose to rain and water.

3. Do not operate the unit upside-down.

4. Never open the cabinet. If a foreign object drops into the set, contact your dealer.

5. Place the unit in a location with adequate air circulation. Do not interfere with proper ventilation; this will cause the internal temperature to rise and may result in a failure.

6. Do not use force on switches, knobs or cords. When moving the unit, first turn the unit off. Then gently disconnect the power plug and the cords connecting to other equipment. Never pull the cord itself.

7. Do not attempt to clean the unit with chemical solvents: this might damage the finish. Use a clean, dry cloth.

8. Be sure to read the “Troubleshooting” section on common operating errors before concluding that your unit is faulty.

9. This unit consumes a fair amount of power even when the power switch is turned off. We recommend that you unplug the power cord from the wall outlet if the unit is not going to be used for a long time. This will save electricity and help prevent fire hazards. To disconnect the cord, pull it out by grasping the plug. Never pull the cord.

10. To prevent lightning damage, pull out the power cord and remove the antenna cable during an electrical storm.

11. The general digital signals may interfere with other equipment such as tuners or receivers. Move the system farther away from such equipment if interference is observed.

NOTE: Please check the copyright laws in your country before recording from records, compact discs, radio, etc. Recording of copyrighted material may infringe copyright laws.

Voltage Selector (General Model Only)

Be sure to position the voltage selector to match the voltage of your local power lines before installing the unit.

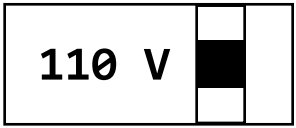

What's In the Box

1. KaraokePal rechargeable speaker
2. Wireless Microphones (2)
3. Remote
4. USB-C charging cable

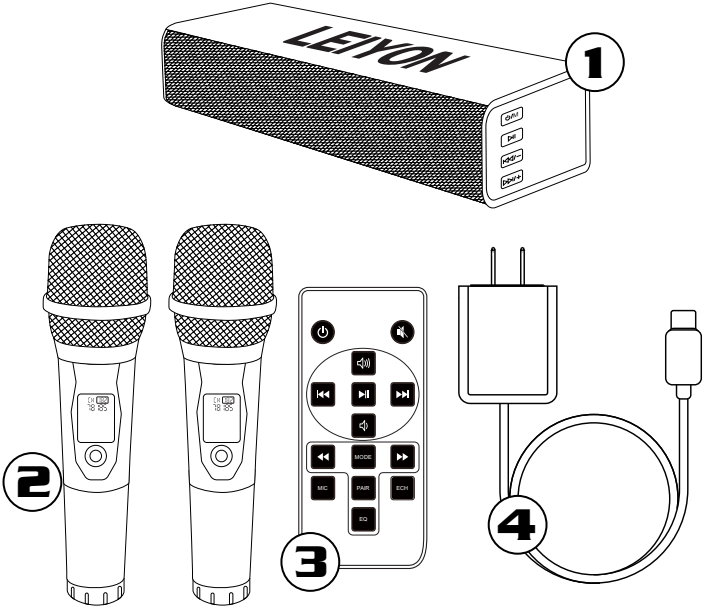

Getting Started

Thank you for purchasing the KaraokePal, the new generation of portable all-in-one karaoke systems from Vocopro. We are going to start by going over some basics about the system, followed by showing how to connect various devices, then we will cover the functions in depth, and finally some troubleshooting steps should you encounter any issues.

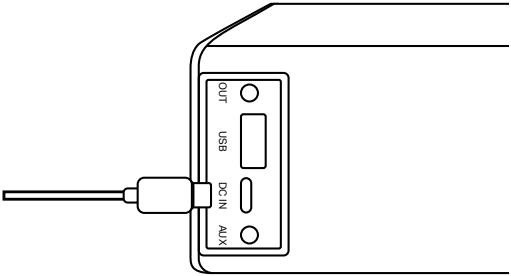

The first time you open the KaraokePal, we recommend to plug it into power and leave it plugged in overnight, or for about 8-10 hours. This will ensure that the batteries can be fully charged with every subsequent charging.

To charge the KaraokePal speaker, use the included USB-C charging cable. Connect the small end to the DC IN on the speaker, and plug the large end into a wall socket or power strip.

Getting Started

The KaraokePal normally takes about 3-4 hours to charge up to full, and can run for 3-8 hours on a full charge depending on how loud you have the volume set.

Every time you turn the KaraokePal speaker off and on it will reset all settings, including the selected input, speaker volume, mic volume, mic echo, and EQ settings.
This means that when you turn on the KaraokePal it will be set to volume level 11. Use the remote to increase the volume up to 32 (max volume setting).

If you do not play any music or use the microphones for 10 minutes, the speaker will shut itself off. This will happen whether or not it is plugged into a power source.

There is a built-in voice prompt that will state when the system is powered on, and will state which input is selected every time it is changed. This voice prompt cannot be adjusted or silenced.

Getting Connected

Connecting the Microphones

1. Unscrew the battery cover and insert two (2) AAA batteries, replace cover.

2. Press the button on the microphone to turn it on.

3. The wireless frequency for the microphones and receiver are pre-set so it will connect automatically.

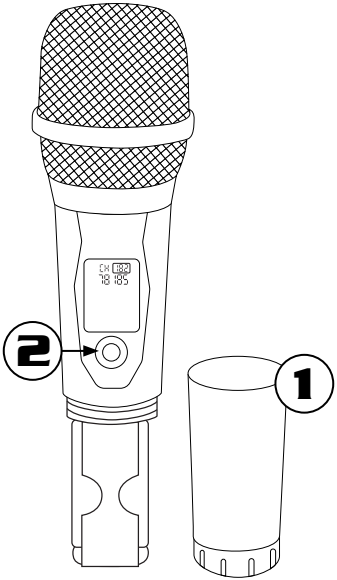

Getting Connected

Connecting your device via Bluetooth.

1. Press the Power/Mode button on the speaker, or the Mode button on the remote, and put the speaker in Bluetooth mode. The KaraokePal will automatically go into pairing mode to search for a Bluetooth device. When the display “bt” is flashing quickly the KaraokePal is in pairing mode.

2. Go to the Bluetooth options on your device. Turn on Bluetooth and you should see KaraokePal under the available devices.

3. Once connected and playing, you can pause and skip tracks using the remote or the buttons on the speaker. The volume control on your device is not linked to the volume control for the speaker, they work independently of each other.

4. If your Bluetooth device is not able to pair with the KaraokePal, check whether it has been connected and disconnect any previous Bluetooth connections and reset the Bluetooth module. Hold the Play button to disconnect and enter pairing mode.

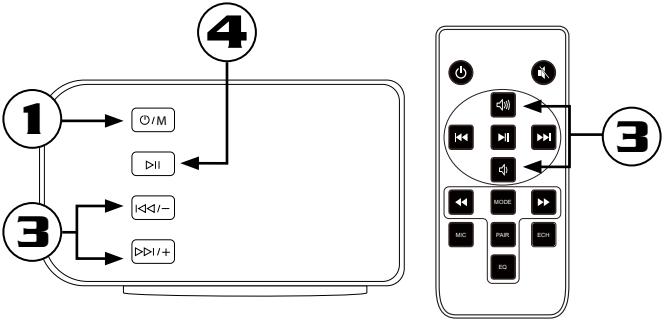

Getting Connected

Connecting a USB flash drive

1. Insert your USB flash drive, the KaraokePal will automatically switch to USB input and begin playing the first available track.

2. Use the buttons on the remote or the speaker to play or pause and skip between tracks.

* It is recommended to use a flash drive that is 32 GB or smaller and formatted as FAT or FAT-32

** The KaraokePal can play mp3 and WMA audio files. It is not designed to play video files such as AVI as there are no video connections. It can play mp3+G files as the audio and graphics are actually two separate files and it will only play the mp3 audio.

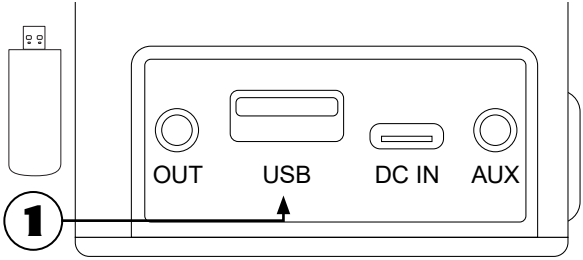

Getting Connected

Connecting a sound source to the AUX IN

1. Press the Power/Mode button on the speaker, or the Mode button on the remote, and put the speaker in Auxiliary mode.

2. Use an 1/8 inch audio cable (not included) connect one end to the AUX IN on the KaraokePal and connect the other end to an audio output on your device.

Compatible device for this AUX input are audio outputs from TVs, Smart devices, CD/CD+3/DVD players, and laptops/PCs/Macs.

This Aux input DOES NOT support vinyl record players or microphone level input.

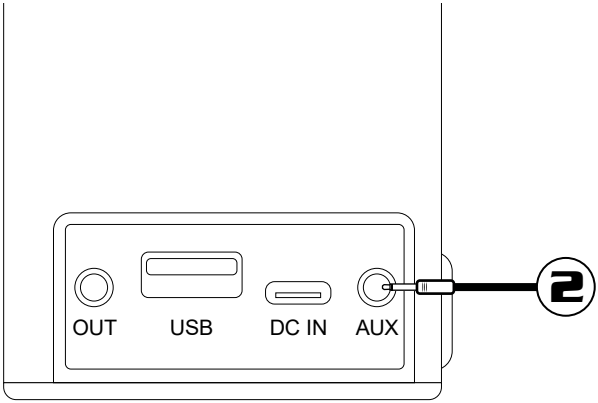

Getting Connected

Connecting to another speaker or device using the AUX OUT

1. Use an 1/8 inch audio cable (not included) connect one end to the AUX OUT on the KaraokePal and connect the other end to an audio input on your device.

2. If you increase or decrease the volume on the KaraokePal it will also increase or decrease the signal being sent to your device via the AUX OUT.

3. If you MUTE the KaraokePal, the audio will also be muted on the AUX OUT. If you adjust the volume or mic volume the system will un-mute. Compatible devices for this output are line inputs of powered speakers, home receivers/stereos, audio mixing boards, audio recorders, and audio inputs of automobiles.

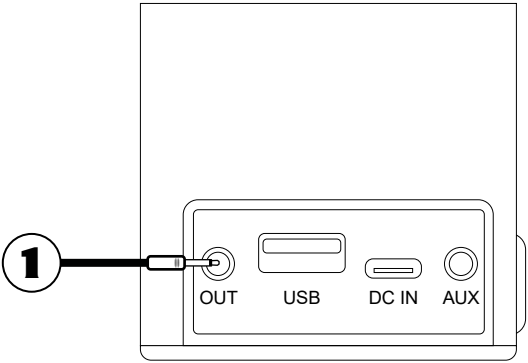

Functions and Descriptions

Front Display

1. Input/Menu Display: This will show which input the KaraokePal is currently connected to, or when you switch inputs or change the value of music volume, mic volume, mic echo, EQ, etc.

It will show a brief ON when the microphones are turned on and connected. It will show a brief OFF when the microphone is turned off.

2. Charge Indicator: A blue LED will flash when charging, and it will turn off after being fully charged.

3. Bluetooth Indicator: The word BT will become solid when the Bluetooth connection has been established. It will flash when no Bluetooth device has been connected, or if the Bluetooth connection is disconnected by pressing “pair” on the remote controle.

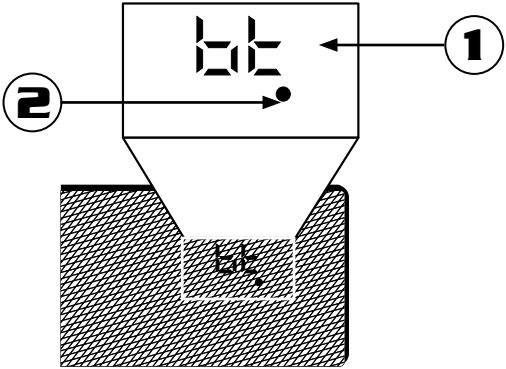

Functions and Descriptions

Side Panel

1. DC IN: Use the included USB-C cable to connect to power and charge the battery.

Important! Turn off the unit while charging the battery

2. USB: Here you can plug in a USB flash drive that has been loaded with mp3 or WMA audio files. This connection is ***NOT*** designed to interface with a phone or tablet via USB.

3. AUX OUT: Use this 1/8 inch connection to send the music and microphone audio out to another device such as a recorder or an additional powered speaker.

4. AUX IN: Use this 1/8 inch connection to send audio from another device to be played through the KaraokePal, such as a TV, CD, or MP3 player.

5. Power/Mode: ***Press*** to turn on the unit. ***Press*** to switch input/mode. ***Press and Hold*** for about three seconds to turn off the unit.

Please Note: The microphone default volume is set at high when the unit is turned on.

6. Play/Pause/Pair: ***Press*** to play or pause the audio when you are connected via Bluetooth.

Hold to connect or disconnet the bluetooth device.

7. Skip Backward/Volume Down: ***Press*** to skip backwards one track when in Bluetooth or USB mode.

Hold to decrease the overall volume. Ranges from 0 to 32.

8. Skip Forward/Volume Up: ***Press*** to skip forwards one track when in Bluetooth or USB mode.

Hold to increase the overall volume. Ranges from 0 to 32.

Functions and Descriptions

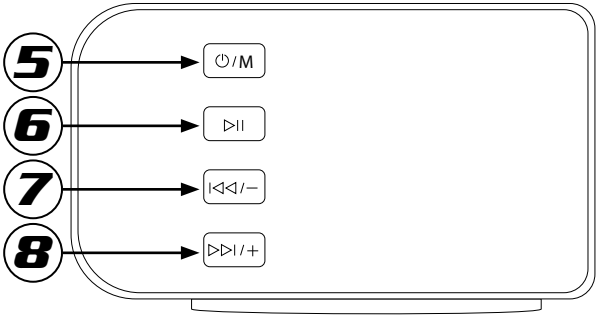

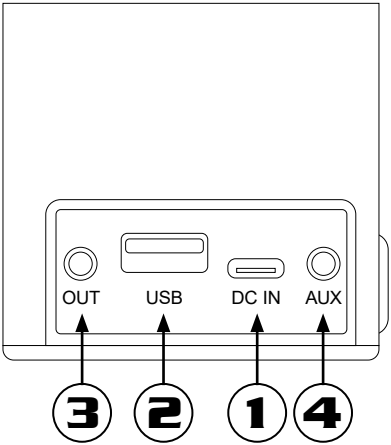

Functions and Descriptions

Remote

1. Power: ***Press*** to power the system on or off.

2. Mute: ***Press*** to mute all audio coming from the KaraokePal including music and microphone. Press again to unmute audio from the KaraokePal.

3. Volume Up & Down: Increase or decrease the overall volume for music and mic audio. Ranges from 0 to 32.

4. Mode: ***Press*** to change the input source between Bluetooth, Auxiliary, and USB. You can only select USB if the KaraokePal detects a USB drive is inserted.

5. Mic Volume Up & Down: The microphone volume has 3 stages of volume. ***Press*** to change from middle to high volume. ***Press*** again to change to low volume. ***Press*** again to change back to the middle volume setting.

***Please note:** The default microphone volume is set at high when the unit is turned on.

6. Echo Up & Down: The echo volume has 3 stages of volume. ***Press*** to change from middle to high volume. ***Press*** again to change to low volume. ***Press*** again to change back to the middle volume setting. The higher the Echo, the more time delay there will be between each echo.

7. Skip Track Backwards: ***Press*** to start the current song over or skip back to the previous song. Only works in Bluetooth and USB modes.

8. Skip Track Forwards: ***Press*** to skip forward to the next song. Only works in Bluetooth and USB modes.

Functions and Descriptions

9. Play / Pause: ***Press*** to play or pause the current song. Only works in Bluetooth and USB modes.

10. Pair: ***Press*** to disconnect the currently paired Bluetooth device, ***Press*** again to connect to the previously paired Bluetooth device.

11. EQ: ***Press*** to cycle through the three preset music EQ options, E1, E2, and E3.

***Please note:** This is for music only and does not change the tone of the microphones.

***Please note:** Before first use, please pull the insulation piece out to make the remote control ready for normal use.

Functions and Descriptions

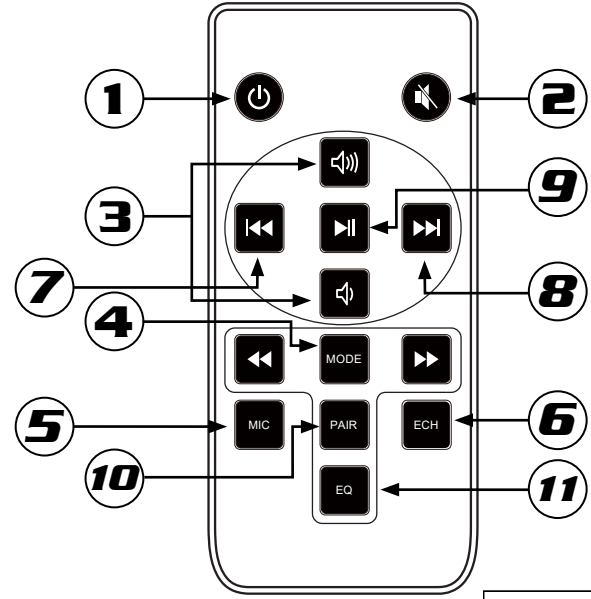

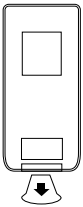

Lithium Battery
CR2025
3V

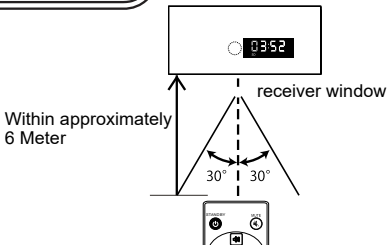

Troubleshooting

The KaraokePal speaker will not turn on.

• Make sure to hold the power button down for a few seconds. A quick press may not turn the system on, especially if it is not plugged into a power source.

The Microphone will not turn on or the sound is cutting out.

• Ensure that you have good batteries in the mic and that they are in the correct orientation. When in doubt, try a fresh pair of NEW batteries.

• Low batteries in the microphone can be shown in a few different ways, the mics may cut out or distort when you speak, or you may hear an oscillating sound like a fan or a helicopter.

My device is not connecting via Bluetooth.

• Check to see that the KaraokePal is ready to connect to a new device. Make sure the speaker is in Bluetooth mode, and the indicator light is flashing showing it is ready to connect.

• If the Bluetooth indicator light is solid, press the Pair button on the remote to disconnect the current device.

• Turn on Bluetooth on your device. If you have not connected before, the KaraokePal should be listed under ‘available devices’ or ‘other devices’.

• If you have connected before, try selecting the KaraokePal from the list and “forget” the speaker. Turn Bluetooth off and then back on to search for the speaker again.

Troubleshooting

I have an external source connected to the AUX IN, but have no sound.

• Check to see that the KaraokePal is on the correct input, it should say AUX on the front display.

• Make sure the source device is playing and the volume is turned up.

• Make sure the speaker is turned up and not muted.

I have a powered speaker or other device connected to the AUX OUT but it is not getting sound.

• Make sure the volume on the KaraokePal speaker is turned up and not on mute.

• Check your connections between the KaraokePal and your receiving device. Make sure the device is turned on and ready to accept audio on the correct input.

Troubleshooting

I have a USB flash drive inserted but it will not play.

• For all our Karaoke systems with USB input, we recommend to use a flash drive that is 32 GB or smaller, and that it is formatted as FAT or FAT-32.

• The KaraokePal can only read audio files that are formatted as mp3 or WMA. It cannot read video files such as AVI or mp4.

• If you have your songs organized in many different folders, the machine may not be able to access them all. If you are having this issue, try to remove the files from their folders and load them directly onto the flash drive.

FCC Statement:
This device complies with part 15 of the FCC Rules. Operation is subject to the following
two conditions: (1) This device may not cause harmful interference, and (2) this device
must accept any interference received, including interference that may cause undesired operation.
This equipment has been tested and found to comply with the limits for a Class B digital
device, pursuant to part 15 of the FCC Rules. These limits are designed to provide reasonable protection against harmful interference in a residential installation. This equipment generates, uses and can radiate radio frequency energy and, if not installed and used in accordance with the instructions, may cause harmful interference to radio communications. However, there is no guarantee that interference will not occur in a particular installation. If this equipment does cause harmful interference to radio or television reception, which can be determined by turning the equipment off and on, the
user is encouraged to try to correct the interference by one or more of the following measures: —Reorient or relocate the receiving antenna.
—Increase the separation between the equipment and receiver.
—Connect the equipment into an outlet on a circuit different from that to which the receiver is connected.
—Consult the dealer or an experienced radio/TV technician for help.
Caution: Any changes or modifications not expressly approved by the party responsible
for compliance could void the user's authority to operate the equipment.
This equipment complies with FCC radiation exposure limits set forth for an uncontrolled environment. This transmitter must not be co‐located or operating in conjunction with any other antenna or transmitter.

RF exposure warning:
The device has been evaluatesd to meet general RF exposure requirement. The device can be used in portable exposure condition without restriction.