araknis NETWORKS

110 SERIES SINGLE-WAN GIGABIT VPN ROUTERS

Quick Start Guide

AN-110-RT-2L1W

AN-110-RT-2L1W-WIFI

Federal Communication Commission Interference Statement

This equipment has been tested and found to comply with the limits for a Class B digital device, pursuant to Part 15 of the FCC Rules. These limits are designed to provide reasonable protection against harmful interference in a residential installation. This equipment generates, uses and can radiate radio frequency energy and, if not installed and used in accordance with the instructions, may cause harmful interference to radio communications. However, there is no guarantee that interference will not occur in a particular installation. If this equipment does cause harmful interference to radio or television reception, which can be determined by turning the equipment off and on, the user is encouraged to try to correct the interference by one of the following measures:

- Reorient or relocate the receiving antenna.
- Increase the separation between the equipment and receiver.
- Connect the equipment into an outlet on a circuit different from that to which the receiver is connected.
- Consult the dealer or an experienced radio/TV technician for help.

FCC Caution: Any changes or modifications not expressly approved by the party responsible for compliance could void the user's authority to operate this equipment.

This device complies with Part 15 of the FCC Rules. Operation is subject to the following two conditions: (1) This device may not cause harmful interference, and (2) this device must accept any interference received, including interference that may cause undesired operation.

This device is restricted for indoor use.

IMPORTANT NOTE:

FCC Radiation Exposure Statement:
This equipment complies with FCC radiation exposure limits set forth for an uncontrolled environment. This equipment should be installed and operated with minimum distance 20cm between the radiator & your body.

For product available in the USA/Canada market, only channel 1~11 can be operated. Selection of other channels is not possible.

Industry Canada Statement

This device complies with Industry Canada's licence-exempt RSSs. Operation is subject to the following two conditions:
(1) This device may not cause interference; and
(2) This device must accept any interference, including interference that may cause undesired operation of the device.
Le présent appareil est conforme aux CNR d'Industrie Canada applicables aux appareils radio exempts de licence. L'exploitation est autorisée aux deux conditions suivantes : (1) l'appareil ne doit pas produire de brouillage, et (2) l'utilisateur de l'appareil doit accepter tout brouillage radioélectrique subi, même si le brouillage est susceptible d'en compromettre le fonctionnement.

Caution:
(i) the device for operation in the band 5150-5250 MHz is only for indoor use to reduce the potential for harmful interference to co-channel mobile satellite systems;

(ii) For product available in the USA/Canada market, only channel 1~11 can be operated. Selection of other channels is not possible.

Avertissement:
(i) les dispositifs fonctionnant dans la bande 5150-5250 MHz sont réservés uniquement pour une utilisation à l'intérieur afin de réduire les risques de brouillage préjudiciable aux systèmes de satellites mobiles utilisant les mêmes canaux;

(ii) Pour les produits disponibles aux États-Unis / Canada du marché, seul le canal 1 à 11 peuvent être exploités. Sélection d'autres canaux n'est pas possible.

© 2017 Araknis Networks®

Radiation Exposure Statement:
This equipment complies with IC RSS-102 radiation exposure limits set forth for an uncontrolled environment. This equipment should be installed and operated with minimum distance 63 cm between the radiator & your body.

Déclaration d'exposition aux radiations:
Cet équipement est conforme aux limites d'exposition aux rayonnements IC établies pour un environnement non contrôlé. Cet équipement doit être installé et utilisé avec un minimum de 63 cm de distance entre la source de rayonnement et votre corps.

FCC Warning

Changes or modifications not expressly approved by the party responsible for compliance could void the user's authority to operate the equipment. This device complies with Part 15 of the FCC Rules. Operation is subject to the following two conditions:

1. This device may not cause harmful interference, and
2. This device must accept any interference received, including interference that may cause undesired operation.

CE Warning

This is a product with CE certification. In a domestic environment, this product may cause radio interference, in which case the user may be required to take adequate measures.

The device complies with ISED's license-exempt RSSs and Canada ICES-OO3.

© 2017 Araknis Networks®

CE Statement

This equipment complies with EU radiation exposure limits set forth for an uncontrolled environment. This equipment should be installed and operated with minimum distance 20 cm between the radiator & your body.

All operational modes:
2.4GHz: 802.11b, 802.11g, 802.11n (HT20), 802.11n (HT40), 802.11ac (VHT20), 802.11ac (VHT40)
5GHz: 802.11a, 802.11n (HT20), 802.11n (HT40), 802.11ac (VHT20), 802.11ac (VHT40), 802.11ac (VHT80)

The frequency and the maximum transmitted power in EU are listed below:
2412-2472MHz: 19.90 dBm
5180-5240MHz: 22.90 dBm

The device is restricted to indoor use only when operating in the 5150 to 5350 MHz frequency range.

	AT	BE	BG	HR	CY	CZ	DK
	EE	FI	FR	DE	EL	HU	IE
	IT	LV	LT	LU	MT	NL	PL
	PT	RO	SK	SI	ES	SE	UK

Welcome to Araknis Networks™

Thank you for choosing our new line of Araknis 110 routers. With gigabit connectivity on all ports, single WAN and USB 2.0 capabilities, advanced networking functionality (QoS, VLANs, VPN, port forwarding), these routers are top of the line and meant for some serious networking applications!

Features

- Compact Design
- Single-WAN, Dual-LAN
- Fanless
- USB 2.0
- OvrC Enabled
- 2x2 Dual-Band Wireless-AC 1200Mbps (Wi-Fi models only)

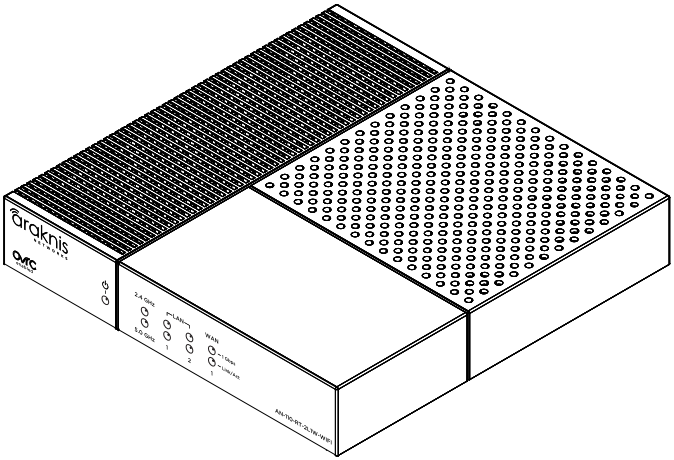

Note About this Booklet

This booklet uses the Wi-Fi router for all illustrations. Although the non-wireless router looks a little different, all instructions given here are nonetheless applicable to its operation.

Step 1: Unbox

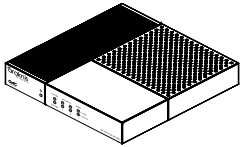

Router

Rubber Feet (4)

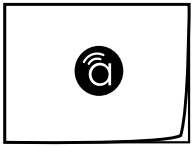

Quick Start Guide

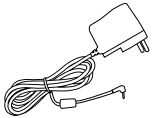

12V 2A DC Power Supply

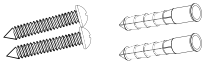

Wall Mount Kit

Screw Hole Plug

Step 2: Install

110 compact routers feature two mounting options.

NOTE: Do not stack other equipment on top of the router to avoid possible interference or damage.

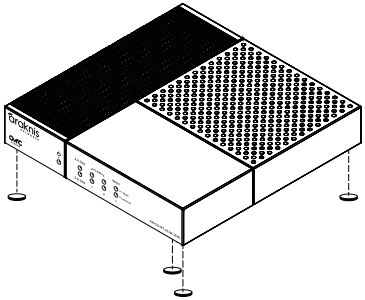

Surface Mount
(use included rubber feet)

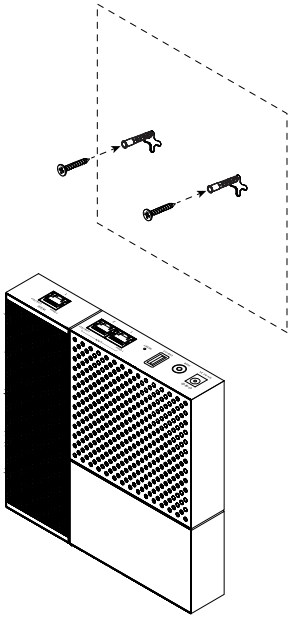

Wall Mount

Step 3: Connect

The router uses the enclosed power supply.

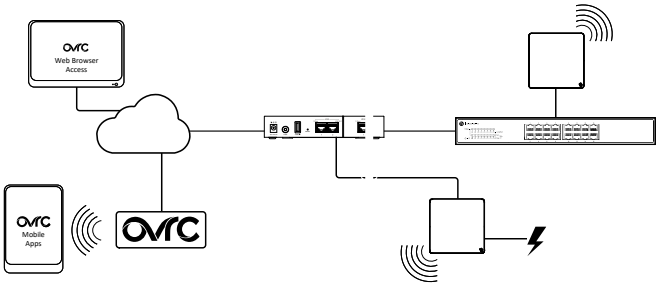

Step 1: Power off all network devices.

Step 2: Connect the modem to the WAN port(s).

Step 3: Connect the LAN cables.

Step 4: Connect any USB devices (optional).

Step 5: Connect the power supply to the router.

Step 6: Flip the power switch on the router to on.

Step 4: Verify Operation

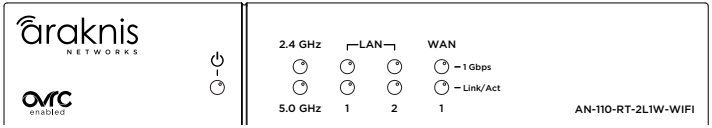

Ⓐ **Power LED –** On: system is up.
Off: system is down.

Ⓑ **1Gbps LED –** On: port connected at 1Gbps speed.
Off: port is connected at 10/100Mbps speed.

Ⓒ **Link/Act LED –** On: port is connected to another device.
Blinking: packets are running through the port.
Off: port is not connected to a device.

Step 5: Log In and Configure

Make sure the Ethernet adapter on your computer is configured to DHCP mode or configure the adapter with a static IP address:

- IP Address: 192.168.1.x (x=any number from 2 to 99)
- Subnet Mask: 255.255.255.0

Open a web browser and enter http://192.168.1.1 in the address bar.

Log in using the default credentials:

- Username: araknis
- Password: araknis

If you can't get to the login page, check to make sure your computer has been issued an IP address by the router. You can also claim the router in OvrC and use web connect.

Step 6: Quick Setup

Ⓐ Click the **Quick Setup** button in the left bar.

Ⓑ Use Quick Setup to configure:

- System name
- System IP address
- WAN 1 and WAN 2 settings
- DHCP servers
- Port forwarding

Use the menus in the web interface to change additional settings.

Other Access Methods: OvrC

OvrC gives you remote device management, real-time notifications, and intuitive customer management, right from your computer or mobile device. Setup is plug-and-play, with no port forwarding or DDNS address required. To add this device to your OvrC account:

Ⓐ Connect the WAP to the Internet

Ⓑ Log Into OvrC (www.ovrc.com)

Ⓒ Add the Device (MAC address and Service Tag numbers needed for authentication)

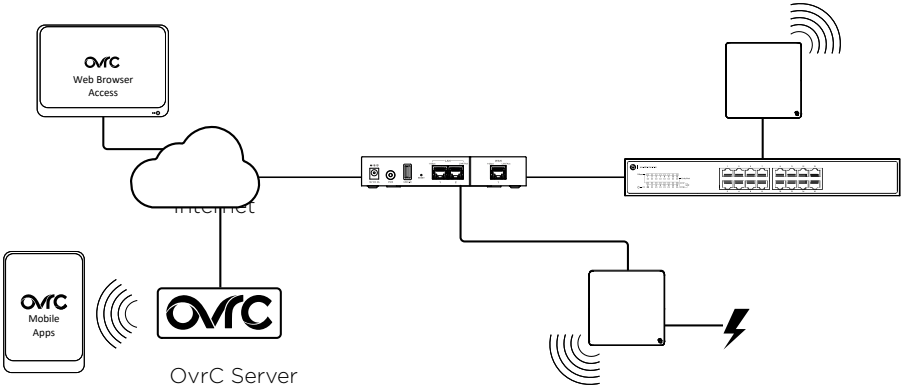

Pro Tip: Resetting the Router

call out factory reset and reboot behavior (use 110 wirelss image)

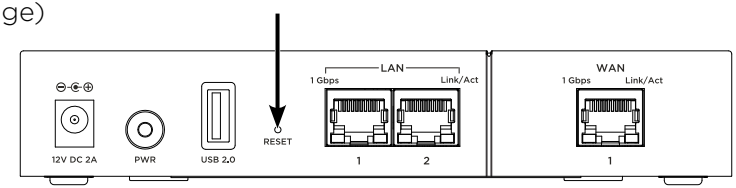

Reboot – Press and hold the RESET button on the back of the router for 5 seconds, then release. The router then reboots and the front status lights flash.

Factory Reset – Press and hold the RESET button for 10–15 seconds until the status LEDs flash once. The router then resets to factory default settings and reboots.

2-Year Limited Warranty

Araknis Networks® products have a 2-Year Limited Warranty. This warranty includes parts and labor repairs on all components found to be defective in material or workmanship under normal conditions of use. This warranty shall not apply to products that have been abused, modified, or disassembled. Products to be repaired under this warranty must be returned to a designated service center with prior notification and an assigned return authorization (RA) number. Contact technical support for an RA number.

Contact Information

Ⓦ AraknisNetworks.com

Ⓟ Technical Support 866-838-5052

Ⓔ techsupport@araknisnetworks.com

The latest version of this QSG may be found on the product page support tab.

© 2018 Araknis Networks®
171220-1123