ZigBee Contact Sensor
Installation Guide

Package contents

- C4-Z2C-Z3 ZigBee Contact Sensor (Zigbee 3)
- Four wall mounting screws
- Four plastic dry wall anchors
- AA batteries (2)

Requirements

- X4 Control4 OS 4.2 (or newer)
- CORE controller to create a Zigbee 3 mesh

Features

The ZigBee Contact Sensor (Z2C) is a single device that combines the features of:

- Remote contact sensors (up to four)
- Remote thermistors (one)
- Internal contact (internal magnetic reed switch)
- Internal thermistor and humidistat

Any of these inputs can be used to trigger and control automated events—such as sending an e-mail or turning on a cabinet light when its door is opened—throughout the Control4 system.

You can position this wireless device anywhere you need contact connections or climate reporting.

As a contact sensor

The device contains five contacts: one internal contact and connections for four wired contacts.

The internal contact is a magnetic reed switch. To use this internal contact, the Z2C should be mounted so that the indention (along the same edge as the identify button) comes in close proximity to a mounted magnet (not included) in a fully closed state (door is closed). When the door opens, the magnetic connection is lost, and that state change is pushed to the system.

Wiring guide:

Contact 1 -> Pin C1
Contact 2 -> Pin C2
Contact 3 -> Pin C3
Contact 4 -> Pin C4
(All can use either of the Cm pins as Common)

As a thermistor and humidistat

The device contains an integrated thermistor and humidistat, as well as a connection for an external thermistor, allowing it to be used almost anywhere to report environmental conditions or to inform the climate control system. The thermistor senses temperatures from 32°F to 104°F (0°C to 40°C), and the humidistat senses humidity from 5% to 90%. The device checks the temperature and humidity every five minutes. If the temperature has changed more than 0.9°F (0.5°C), the device reports the new temperature and humidity values.

Notes:

- The humidity and internal and external temperature outputs can be connected (bound) to the Control4 Wireless Thermostat by Aprilaire (C4-THERM).
- A value of -40° in the *Remote Temperature* field could indicate either a negative temperature or that no remote thermistor is connected.
- The integrated humidistat will return a zero value after the device is rebooted until the actual humidity value can be reported.
- See “Sample wiring configurations” below for an example of an external thermistor connection.
- To display the temperature and/or humidity in Navigator, add the “Temperature Display Driver (OS 2.10+)” to the project and connect the driver’s temperature driver to the Z2C.
- Given the variations in temperature and humidity measurements and environments, it may be necessary to independently test and verify the local and remote temperature and humidity. The properties *Local Temperature Offset*, *Remote Temperature Offset*, and *Local Humidity Offset* can be used for this purpose.

Important safety instructions

Caution! You should install this device in accordance with all national and local electrical codes.

Caution! Improper use or installation of this device can result in loss of and damage to property.

Important: This product is not intended for direct connections to AC mains (120V/220V). Refer to the specifications.

Important: You must operate this device in accordance with the instructions and specifications in this installation guide.

Important: Using this product in any manner other than outlined in this document voids your warranty. Also, Control4 is *not* responsible or otherwise liable in any way for any damage resulting from the misuse of this product. See **ctrl4.co/warranty** for details.

Specifications

Model number	C4-Z2C-Z3 (single)
System requirements	
Control4 OS system requirements	OS 4.2 or newer
Control4 system integration	Each installed ZigBee Contact Sensor requires input connections to the Composer project.
Driver	The ZigBee Contact Sensor (C4-Z2C-Z3) is available in the Composer Online Driver Database.
Communication	
Networks supported	Control4 Zigbee 3 mesh networking protocol, based on the IEEE 802.15.4 Zigbee standard
ZigBee data rate	250 kbps
ZigBee frequency range	2.405 – 2.475 GHz
Connections	
Contact sensor input	4 inputs, accepts AWG 16-28, common ground connection.
External thermistor	1 thermistor input, sold separately. See "Accessories"
Integrated features	
Internal contact	Internal magnetic reed switch Requires external magnet, sold separately
Integrated internal thermistor	Internal thermistor can be used for local temperature sensing: 32°F to 104°F (0°C to 40°C)
Integrated humidistat	Can measure local humidity from 5% to 90%.
Power	
Power consumption	100mA at 3V, fully active
Power	AA batteries (2), included. Alkiline batteries are recommended.
Other	
Available colors	Black (water-based paintable enclosure)
Dimensions (L × W × H)	3.1" (78.7 mm) × 2.6" (65.7 mm) × 1.05" (26.6 mm)
Weight	2.5 oz. (70.9 g) without batteries
Environmental	Temperature: Operational 32°F to 104°F (0°C to 40°C) Storage -20°F to 158°F (-29°C to 70°C) Humidity 5% to 95% non-condensing This device is *not* waterproof and must be kept out of direct contact with water. The product must *not* be immersed.
Paintable enclosure	The cover assembly plastics are paintable with any water-based residential paints. *Do not clog the cover assembly vent holes with paint.*
Accessories	
External thermistor	AC-DOTS1-W

Installing

Opening the case and installing the batteries

1 Detach the tray from the cover by inserting a flat screwdriver into the opening slot in the side of the cover and pushing in gently, while at the same time pulling the cover out and away from the tray.

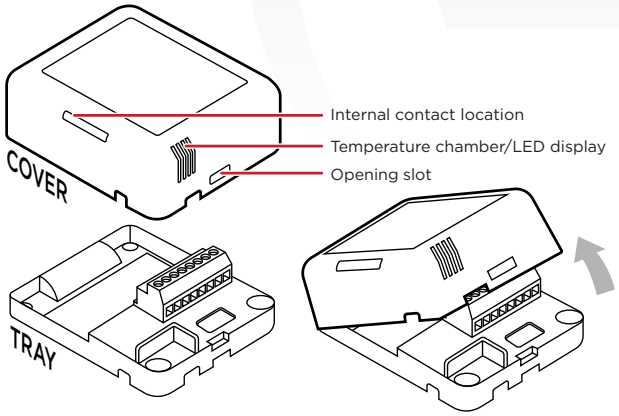

The cover holds the radio logic board (the actual device) and pins and the internal contact. The cover attaches to the tray. The tray holds the wiring terminals and is mounted to a wall or flat surface.

The cover "rocks" into contact with the tray. To separate the two, insert a screwdriver or other flat object into the opening slot on the side of the cover, gently push in and then "rock" it away from the tray.

2 Install the two AA alkaline batteries (included) into the device, oriented according to the diagram in the battery compartment.

Battery use and care

- Keep the battery contacts and compartment clean.
- Remove the batteries from the device if it is not going to be used for several months.
- Extreme temperatures reduce battery performance. Avoid putting the device in very warm places.
- NiMH batteries are not recommended due to their low voltage causing inaccurate battery level readings.

Battery replacement safety rules

Warning! To prevent a battery short, leakage or rupture:

- Use typical AA alkaline batteries only.
- Do not mix battery types.
- Do not attempt to recharge a battery unless the battery is specifically marked "rechargeable."
- Never dispose of batteries in a fire.

AVERTISSEMENT ! Pour empêcher court-circuiter, fuite ou rupture de batterie:

- Utilisez les accumulateurs alcalins typiques d'AA seulement.
- Ne mélangez pas les types de batterie.
- N'essayez pas de recharger une batterie à moins que la batterie soit spécifiquement marqué « rechargeable ».
- Ne vous débarassez jamais des batteries dans un feu.

Installing the device

1 Place the device in a location which ensures the following:

- Easy access to any externally-connected wires
- ZigBee mesh networking efficiency

Note: Make sure the device has good ZigBee wireless reception by (1) ensuring it is within range of another ZigBee device and (2) avoiding other electrical equipment that may cause interference with the ZigBee signal (such as cordless telephones that operate on the 2.4 GHz frequency.)

- Avoiding unnecessary exposure to extreme environmental conditions.

IMPORTANT! Do not place the device in direct sunlight.

2 If an external thermistor is used with the device, place it away from direct sunlight, drafts, doorways, skylights, windows, and exterior walls for best accuracy.

3 Position the tray against the wall or other flat surface.

4 If you are using the internal contact, position the device so that the narrow indentation that marks the internal contact (on the long edge of the cover) aligns with the external magnet (not included).

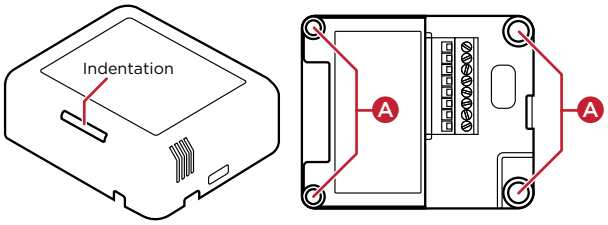

5 Mark the locations of the four screw holes on the wall.

6 If mounting the device to drywall, remove the tray from the [illegible] four screw hole locations (A) previously marked on the wall.

7 Thread any contact or thermistor wires from the wall through the openings in the tray and to the terminal block.

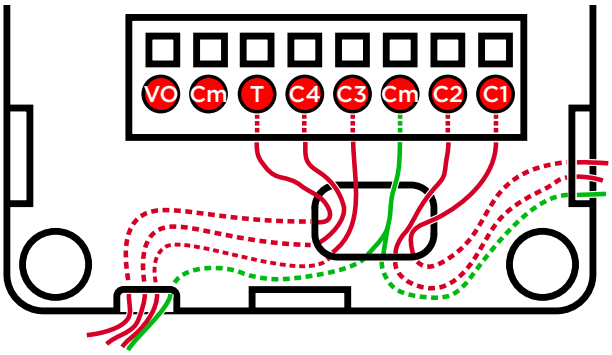

Note: The two *Cm* (common/ground) pins are connected and can be used interchangeably.

8 Insert and tighten the mounting screws.

Note: You may optionally choose to use robust two-sided tape to mount the tray assembly to the wall or other flat surface, as long as the tape won't prevent the back of the tray from sitting flush against the mounting surface.

9 Connect the wires from the tray to the terminals in the cover, matching the proper wires to the target terminal locations.

Important! When using multiple external contact sensors, or when using an external contact sensor along with an external thermistor, you *must* connect each device to one of the Common (Cm) pins in addition to the appropriate sensor or thermistor pin to make a proper wiring connection. See the "Sample wiring configurations" section of this document for examples.

10 Attach the cover assembly to the tray:

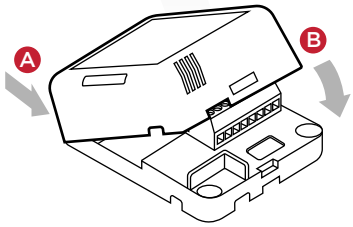

A. *Align the cover edge's two latching tabs with corresponding tab receivers on the tray's edge.*

B. *Close the cover by rocking it toward the other end of the tray until it snaps into place with the tray.*

Configuring

To configure your device:

1 Add the device to your Composer Pro project. When prompted to identify the device, press the **ID** button on the face of the cover four times. The green LED blinks twice to confirm the ID has been sent to the Control4 system.

- OR -

In Composer Express, add a device into the project, scan for ZigBee devices, then press the ID button on the face of the cover four times.

2 In the driver's *Properties* tab, view or configure the settings explained below under "Properties," then click **Set** to the right of the setting after each change.

3 Add generic contact drivers (such as **Door Contact Sensor**, **Gate**, and **Motion Sensor**) in *System Design* view, then connect the generic driver to the appropriate connection on the C4-Z2C device in *Connections* view.

4 For programming, use these events:

- **Missed Checkin:** Triggers when the device misses a controller check in for the number of times specified in the driver's "Missed Checkin Limit" setting.
- **Online:** Triggers when the device comes online.
- **Offline:** Triggers when the device goes offline.
- **Reboot:** Triggers when the device reboots.

Properties

General properties

- **Log Level:** Standard for most drivers, this property allows you to filter which message types display in the *Lua Output* window. Options 0 - 5 correspond to Fatal through Trace levels, increasing in level of verbosity. Options are 0=Fatal, 1=Error, 2=Warning, 3=Info, 4=Debug, and 5=Trace. Default is *1 - Error*.

- **Log Mode:** Activates logging of diagnostic information. The log level is set in the above property. Options include *Off*, *Print* (to the window), *Log* (to the Director Log), and *Print and Log* (both). Default is *Off*.
- **Driver Version:** (Read only) Shows the version number of the driver currently in use.
- **Device Status:** (Read only) Shows the current status of the product, whether online or offline. However, in some cases, the device may not report its status immediately, such as when the device is rebooting.
- **Firmware Version:** (Read only) Shows the version number of the firmware currently in use on the device. The firmware will be updated automatically over the air when the Control4 OS is updated and when that update includes a new firmware version for this device.
- **Bootloader Version:** (Read only) Shows the version number of the firmware currently in use on the device. The bootloader can only be updated by Control4, so this property is for support/diagnostic information only.

Battery properties

- **Battery Level:** Reports the charge level of the battery. When the batteries on a Z2C are low, a low battery alert can be configured using the Z2C's battery level. When the batteries are very low, the LED behavior and temperature and humidity reporting become unreliable.

Humidity properties

- **Local Humidity:** (Read only) Shows the relative humidity measured where the device is located. The value is shown as a percentage.
- **Local Humidity Offset:** The humidity sensor provides accuracy of +/- 4% relative humidity. Adjusting the *Local Humidity Offset* can result in increased inaccuracy of relative humidity reporting without using humidity calibration equipment for validation.

Temperature properties

- **Temperature Scale:** Sets which scale is used to calculate the temperature used in the *Local* and *Remote Temperature* properties described below, and affects only the *Properties* tab's settings. Options include *Fahrenheit* and *Celsius*. Default is *Fahrenheit*.
- **Local Temperature:** (Read only) Shows the most recent reported temperature recorded by the internal thermistor. The scale of the temperature is determined by the *Temperature Scale* property.
- **Local Temperature Offset**—Modifies the reported local temperature to account for environmental variances. The temperature can be changed downward or upward by a maximum of 20 degrees. The default is *0* (no correction).
- **Remote Temperature:** (Read only) Shows the most recent reported temperature recorded by the remote thermistor. The scale of the temperature is determined by the *Temperature Scale* property.
- **Remote Temperature Offset**—Modifies the reported remote temperature (the temperature recorded by an external thermistor) to account for environmental variances. (When multiple temperature sensors are located in the same room, you may notice each sensor shows a slightly different reading. This results from normal manufacturing variances in temperature sensors and the device's position/location in the room.) The temperature can be changed downward or upward by a maximum of 20 degrees. The default is *0* (no correction).

Contacts properties

- **Contact Internal Status:** (Read only) Shows the status of the static connection for the internal contact.
- **Contact 1-4 Status:** (Read only) Represents the status of the wired contacts.

Checkin properties

- **Checkin Interval:** Defines how often the device checks with the controller to see if the controller is requesting information from the device, such as version information, or if the controller is trying to update any settings on the device, such as the check in interval. A check in can also be manually triggered by pressing the button on the Z2C. The check-in interval can be configured to check in with the controller between 10 minutes and 4 hours. The default is 10 minutes. Increasing the check-in interval will increase the battery life of the device.
- **Last Checkin Time:** (Read only) Shows the most recent time the device checked in with the controller.
- **Missed Checkin Limit:** Sets the number of times the checkin is missed before triggering the "Missed Checkin" programming event.

Actions tab

Buttons located on the *Actions* tab allow you to view version and diagnostic information.

- **Version Information:** This action button will display the versions of the driver's Base Template and Template, as well as the Boot Loader to the *Lua Output* window of the *Lua* tab. The *Log Mode* property does not have to be set to Print to display this information to the window.
- **Diagnostic Information:** This action button will display the following information to the *Lua Output* window of the *Lua* tab (the *Log Mode* property does not have to be set to Print to display this information to the window): device ZigBee MAC address, ZigBee mesh PAN id, Template Version, Base Template Version, Boot Loader Version, ZigBee Node ID.

Troubleshooting

If the device is not working:

- Reboot the device by disconnecting power, then re-connecting power.
- Check for proper wiring. See the “Wiring Configuration” diagrams.
- Review the log in the driver’s Lua tab.
- Restore factory defaults (13 button presses).

Note: Un-identifying a device off the ZigBee mesh will cause it to do a factory reset. The settings are preserved, however, after a power cycle or reboot.

LED diagnostics

The indicated statuses appear during device identification and when the ID button is pressed once.

LED	Description
[Green] On	Offline/Waiting for Director
[Yellow] Slow flashing	Scanning
[Blue] On	Join success
[Green] Fast flashing	Join success signal strength=good
[Yellow] Fast flashing	Join success signal strength=adequate
[Red] Fast flashing	Join success signal strength=risk/low
[Red] Medium flashing	Join failed (then returns to offline)
[Green] Slow flashing	Signal strength=good (from Network Tools)
[Yellow] Slow flashing	Signal strength=adequate (from Network Tools)
[Red] Slow flashing	Signal strength=risk/low (from Network Tools)

Button sequences

Functions	# of button presses
Identify	4
Reboot/Reset	15
Reset application defaults	9
Leave mesh, restore factory defaults	13
Signal strength flash LEDs	1

Restoring to previous firmware version

1. Power off the device (disconnect power).
2. While holding down the **ID** button, reconnect power, and continue to press the **ID** button until the LED changes from red to white (about five seconds).
3. Release the button. The device will reboot to its previous firmware version in about one minute.

Sample wiring configuration

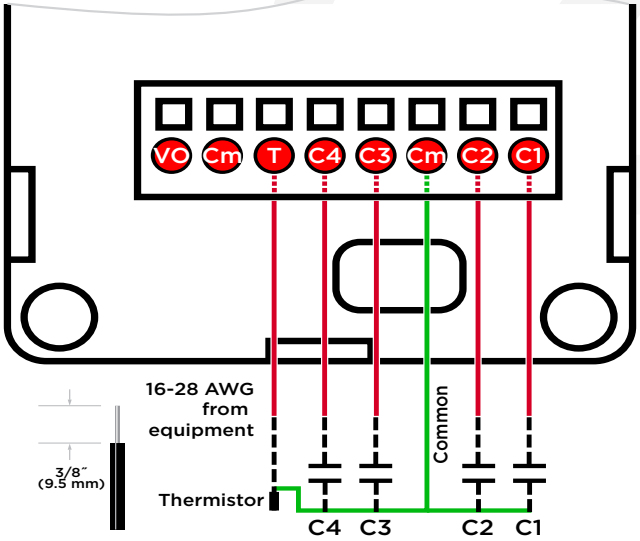

Additional resources

The following resources are available for additional support:

- Control4 Knowledgebase and forums
- Control4 Technical Support
- Control4 website: **www.control4.com**
- Composer documentation available at ***ctrl4.co/docs***.

For the latest version of this document, open this URL or scan the QR code on a device that can view PDFs.

MOST RECENT VERSION — ctrl4.co/z2c-ig

DATA SHEET — ctrl4.co/z2c-ds

Regulatory/Safety information

To review Regulatory information for your particular Control4 products, see the information located on the Control4 website at ***ctrl4.co/reg***.

Patent information

Applicable patents are available at ***ctrl4.co/patents***.

Warranty

Visit ***ctrl4.co/warranty*** for details.

Copyright © 2026, Snap One, LLC. All rights reserved.. Snap One and its respective logos are registered trademarks or trademarks of Snap One, LLC (formerly known as Wirepath Home Systems, LLC), in the United States and/or other countries. 4Sight, Control4, Wirepath, and Wirepath ONE are also registered trademarks or trademarks of Snap One, LLC. Other names and brands may be claimed as the property of their respective owners. Snap One makes no claim that the information contained herein covers all installation scenarios and contingencies, or product use risks. Information within this specification subject to change without notice.

A
200-01274-A
2026-02-09 DH