T4 Series Tabletop Touchscreens
Installation Guide

Supported models

- C4-T4T8-xx 8″ Tabletop Touchscreen (black or white)
- C4-T4T10-xx 10″ Tabletop Touchscreen (black or white)

Introduction

The Control4® T4 Series Tabletop Touchscreens offer complete system control in an elegant, compact, and portable design. The touchscreens are equipped with a full capacitive screen, audio and video Intercom (with the built-in camera) using SIP, and more.

This touchscreen can be located anywhere, and the convenient recharging station enables it to be used as either a tabletop or portable interface. The touchscreen uses an AC power adapter for power and Wi-Fi for network connectivity.

Note: 802.11b is not recommended for video intercom. We recommend using Wireless-N. See “Specifications” for more information.

Box contents

- Tabletop Touchscreen
- Recharging station
- Recharging station power cord

Accessories available for purchase

- Tabletop Permanent Mount Kit (C4-T4PMNT)
- T4 Touchscreen Tabletop 8″ Base (C4-T4TBS8)
- T4 Touchscreen Tabletop 10″ Base (C4-T4TBS10)

Warnings

Warning! This product must be grounded in accordance with the National Electrical Code (NEC) requirements.

Avertissement ! Ce produit doit être fondu selon les conditions électriques nationales de code (NEC).

Caution! Do not place the touchscreen near sources of heat or expose to direct sunlight for an extended time.

Avertissement ! Ne placez pas l’unité près des sources de chaleur ou exposition pour diriger la lumière du soleil pendant une période prolongée.

Caution! This product generates heat. The room must have adequate ventilation or the ability to dissipate heat effectively.

Avertissement ! Ce produit produit de la chaleur. La salle doit avoir à ventilation proportionnée ou la capacité d’absorber la chaleur efficacement.

Caution! Use this product only in dry locations.

Avertissement ! Employez ce produit seulement dans des endroits secs.

Caution! Do not use pens or sharp objects to navigate or make selections on the touchscreen. To select an item or scroll through a list, use your fingertip.

Avertissement ! N’employez pas les stylos ou les objets pointus pour diriger ou pour faire des choix sur l’écran. Pour choisir un article ou un rouleau par une liste, employez votre bout du doigt.

Caution! Improper use or installation can cause DAMAGE OF PROPERTY.

Avertissement ! L’utilisation ou l’installation inexacte peut causer DAMAGE DE PROPRIÉTÉ.

Important! Using this product in a manner other than outlined in this document voids your warranty. Further, Control4 is NOT liable for any damage incurred with the misuse of this product. See “Warranty.”

Specifications and requirements

Specifications

Model Numbers	C4-T4T10-BL, C4-T4T10-WH C4-T4T8-BL, C4-T4T8-WH
Screen	Resolution: 1920 × 1200 Capacitive touch Camera: 720p
Wireless network	802.11b/g/n 2.4 GHz 802.11a/n/ac 5 GHz Security: WEP, WPA/WPA2 PSK, 802.1x EAP, PEAP Notes: (1) While technically the touchscreen can use 802.11b, 802.11b is not supported. (2) 802.11n is recommended for best performance. Even with 802.11n, broadcasting to several devices will degrade Video Intercom response time and images. Broadcasting to additional devices will further degrade performance. See "Wireless Network Limitations."
Power supply	100-240V AC, 50/60 Hz International adapters included Charging base connections: 5V DC power
Dimensions (W×H×D)	8″ Touchscreen: 178 × 130 × 19 mm (7.0 × 5.1 × 0.75″) 8″ Base: 106 × 79 × 56 mm (4.17 × 3.11 × 2.21″) 10″ Touchscreen: 245 × 172 × 23 mm (9.65 × 6.77 × 0.91″) 10″ Base: 115 × 102 × 66 mm (4.53 × 4.02 × 2.60″)
Weight	8″ Touchscreen: 1.05 lb (0.47 kg) 8″ Charging base: 1.4 lb (0.64 kg) 10″ Touchscreen: 1.35 lb (0.60 kg) 10″ Charging base: 1.05 lb (0.46 kg)
Operating temperature	0 to 40 ˚C (32 to 104 ˚F)
Storage temperature	-20 to 70 ˚C (-4 to 158 ˚F)

Requirements

- A controller fully installed and configured with Control4 OS 3.2.1 or newer.
- A wireless network (IEEE 802.11b/g/n) must be installed and available with a wireless access point (WAP). Security can be WEP, WPA/WPA2 PSK, 801.1x EAP, or PEAP.
- For AC power, you must have access to an AC power outlet (AC power adapter included).

Views

Front

A Camera LED
B Camera
C Light sensor
D Stereo microphones
E 8″ or 10″ diagonal, capacitive 1920 × 1200 display

Back (with charging station)

A Power button. Press to enter or exit battery saving mode, press and hold to turn off or restart, or press and hold for 10 seconds to power off.
B Reset pinhole. Press to reset, or press and hold to reset and restore factory defaults.
C Docking connector
D Volume buttons
E Speakers
F Charging station base
G 5V DC power connector

Touchscreen placement

Place the touchscreen's charging station on any level surface near a power outlet. For more information on mounting the touchscreen, see "Portable" under "Mounting options" below.

Note: Consider the angle of the touchscreen's camera and the sitting or standing position of the people who will use it while it's on the charging station.

Connect power and Wi-Fi

The touchscreen uses a Wi-Fi network connection, so it can be positioned anywhere in the home with a strong WiFi signal and access to a power outlet.

To connect power and Wi-Fi:

1. Place the touchscreen's charging station near a power outlet.
2. Connect the AC power adaptor to a power outlet and the charging station.
3. Make sure you have Wi-Fi working in the home.

   If a home requires a large number of Wi-Fi video intercom devices, ensure that you have a robust Wi-Fi network (possibly consisting of multiple access points).

   Connection notes: (1) Video Intercom. Although this device supports 802.11b/g/n, 802.11 b is not recommended for Video Intercom use. (2) We recommend Wireless-N for best performance.

   Wireless network limitations: Many Wi-Fi access points handle Multicasts (Wi-Fi simultaneously sent to multiple devices, for example, when the touchscreen broadcasts video to all stations) by slowing down transmission speed to the 1 Mb basic rate. This can cause overall Wi-Fi congestion in the Wi-Fi network during the broadcast. Video Intercom response times and images may degrade at each device.

Connect to Wi-Fi

To set up Wi-Fi on the touchscreen:

1. After the touchscreen starts up, tap **Network**. The network configuration page opens.
2. Under *Wi-Fi*, tap or slide **OFF/ON** to enable Wi-Fi, then tap the **Wi-Fi** field to open a list of available networks.
3. Tap the network name you want to connect to.
4. Tap the **Password** field, then use the on-screen keyboard to type the password (if required).

   Note: If you need to enter a static IP address, follow the instructions under "To set a wireless static IP address" below before proceeding.
5. Tap **Connect**.

If you don't see the network you want:

1. Tap **+**, then tap the **Network SSID** field and type the SSID (name) of the network by using the on-screen keyboard.
2. Tap the **Security** field, then select the type of security to use.
3. Tap the **Password** field, then use the on-screen keyboard to type the password (if required).

   Note: If you need to enter a static IP address, follow the instructions under "To set a wireless static IP address" below before proceeding.
4. Tap **Save**. The new network is added to the bottom of the network list.

To set a wireless static IP address:

1. Scroll down and tap **Show advanced options**.
2. Tap **IP settings**, then tap **Static**.
3. Select each box one at a time and use the on-screen keyboard to type the:
   - **IP address**
   - **Gateway**
   - **Network prefix length**
   - **DNS 1** (preferred)
   - **DNS 2** (alternate)

Add and configure in Composer Pro

After the touchscreen is installed and appears on the home network, use Composer Pro to add it to the Control4 system and configure it.

Use the Composer Pro *System Design* and *Connections* views to add and configure this device.

To add and configure a T4 touchscreen to a project:

1. Add the **T4 Tabletop Touchscreen** driver to your project.
2. Identify the device to the project, select the touchscreen in Composer Pro's **Connections** > **Network** view, click **Identify**, then tap **Identify** on the touchscreen.
3. To configure the properties, select the touchscreen in the **System Design** view, then view and change the properties in the *Properties* pane as needed.

   Properties include:

   - **Network Connection**—Reports the touchscreen's current network connection type.
   - **Back Light**—Click the arrows or type numbers to set the light level, then click **Set**.

   Advanced properties include:

   - **Enable Camera**—Allows you to enable or disable the camera.

   Intercom (nested under the touchscreen) properties:

   - **Appearance**—Select to hide the touchscreen from appearing in Navigators as an available device.
   - **Behavior**—Select the modes you want this touchscreen to support.
   - **Audio Control**—Select the volume of individual audio settings.

- **Sip Information**—Information for integrating the touchscreen into your SIP/VoIP system.
- **Custom Buttons**—Select to enable and label the two available custom buttons.
- **Alternate Camera**—Select to use an external camera for the video associated with the touchscreen, for example, a security camera mounted to the side of the entrance and pointing at the door.

Mounting

Place the charging station on any level surface. While positioning the touchscreen, consider the angle of the touchscreen's camera and the position of the people who will use it while it's on the charging station.

Portable use

You can set the touchscreen onto the charging station for recharging and tabletop use, and lift the screen from the charging station for portable use (like a tablet).

Tip: For easy and smooth separation of the touchscreen from the charging station, slightly rotate the touchscreen while lifting it.

Permanent mount

You can mount a touchscreen permanently to a surface, such as a table, using the optional T4 Tabletop Permanent Mount Kit (C4-T4PMNT).

1 Peel off the plastic cover on the touchscreen's docking connector recess.

2 Use the Phillips-head flat screws provided in the kit to install the permanent-mount adapter into the touchscreen's docking connector recess.

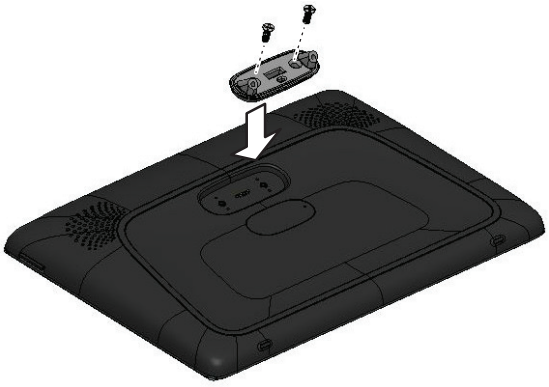

3 Remove the charging station's bottom cover by removing the two screws shown.

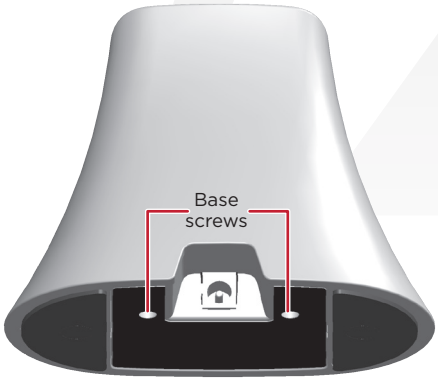

4 Save the cover and screws.

5 Using a #2 Phillips screwdriver inserted from the base of the charging station, remove the two screws that secure the charging station's top docking connector cover (do not remove the screw holding the PCB), then discard the two screws you removed.

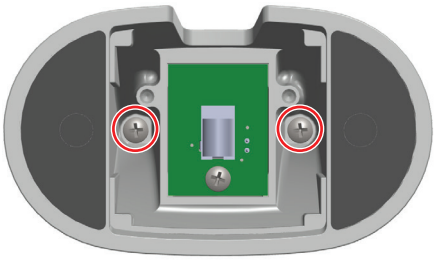

6 Screw the base to the back of the touchscreen as shown *using the new threaded, black screws provided*. DO NOT ATTEMPT TO USE THE ORGINAL SCREWS REMOVED IN STEP 5 OR YOU WILL PERMANANTLY DAMAGE THE THREADS ON THE TOUCHSCREEN.

7 Reinstall the base bottom cover.

8 **To install the charging station permanently into a table or countertop**, remove the small rubber discs covering the threaded holes in the base.

9 Install the threaded posts (all thread) into the base of the charging station.

10 Using the template and a 1/4″ drill, drill two holes into the surface where you are mounting the touchscreen. Maximum surface thickness is 32 mm (1.25″).

11 Mount the charging station assembly into the mounting holes and secure it in place using a washer and nut.

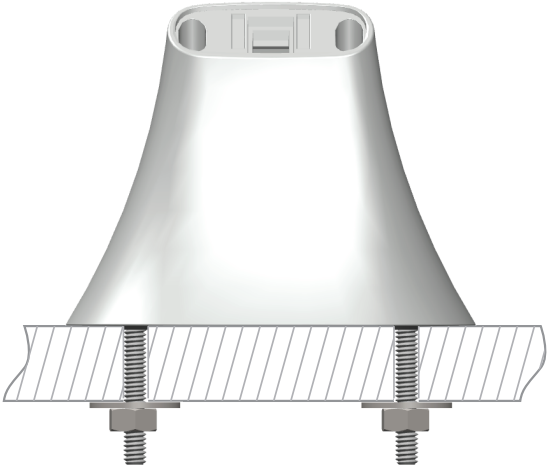

Troubleshooting

To power cycle the touchscreen:

1 Press and hold the ⏻ (power) button for several seconds until the touchscreen turns off.

2 Press and release the ⏻ (power) button again to turn on.

To perform a factory data reset:

1 On the touchscreen's main screen, tap **Settings**, **System Info**, then **Factory data reset**.

- OR -

If the touchscreen has not yet been configured, tap **About**, then **Factory data reset**.

- OR -

To reset without using the display screen:

a Dock the touchscreen onto its charging station.

b Press and hold the volume up button while using a straightened paper clip to press and release the reset button.

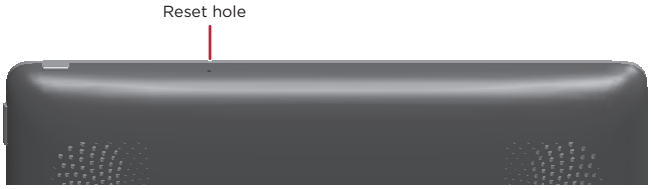

c Keep holding down the volume up button until the icon below appears on the screen, then release the button.

d A message appears, indicating that data is being erased.

Additional resources

The following resources are available for more support.

- Knowledgebase and forums on Tech Community
- Technical Support
- Control4 website: **www.control4.com**
- Composer documentation available at **ctrl4.co/docs**.

Warranty and legal notices

Find details of this product's 2-Year Limited Warranty at **snapav.com/warranty**, or request a paper copy from Customer Service at (866) 424-4489. Find other legal resources, such as regulatory notices and patent information, at **snapav.com/legal**.

More help

For the latest version of this document, open this URL or scan the QR code on a device that can view PDFs.

LATEST VERSION OF THIS DOCUMENT

ctrl4.co/t4-tabletop-ig

T4 DATA SHEET

ctrl4.co/t4-ds

control4.com | 888.400.4070

Copyright ©2020, Wirepath Home Systems, LLC. All rights reserved. Control4 and Snap AV and their respective logos are registered trademarks or trademarks of Wirepath Home Systems, LLC, dba "Control4" and/or dba "SnapAV" in the United States and/or other countries. Snap AV and Wirepath are also registered trademarks or trademarks of Wirepath Home Systems, LLC. Other names and brands may be claimed as the property of their respective owners. All specifications subject to change without notice.

A

200-00683-A
2020-10-09 MS

8″ and 10″ T4 Series In-Wall Touchscreen

Installation Guide

Supported models

- C4-T4IW8-BL — 8″ T4 In-Wall Touchscreen, Black
- C4-T4IW8-WH — 8″ T4 In-Wall Touchscreen, White
- C4-T4IW10-BL — 10″ T4 In-Wall Touchscreen, Black
- C4-T4IW10-WH — 10″ T4 In-Wall Touchscreen, White

Introduction

The Control4® T4 Series 8- and 10-inch In-Wall Touchscreens offer complete system control in an elegant and compact design. The touchscreens are equipped with a full capacitive screen, audio and video Intercom (with the built-in camera) using SIP, and more.

This touchscreen works great in either new construction or retrofit installations. For power and network connectivity, choose from three options:

- **Ethernet with PoE**—The Ethernet network connection is provided through the PoE Injector. No additional wiring is needed.
- **Ethernet with AC**—Connect the touchscreen to one of the LAN ports on the gateway/router using an Ethernet cable. AC power is used to power the touchscreen.
- **WiFi with AC**—The internal Wi-Fi will communicate with the LAN's wireless AP, so no additional network wiring is needed. AC power is used to power the touchscreen.

Note: 802.11b is not recommended for video intercom. We recommend using Wireless-N. See "Specifications" and "Power and Network Installation Options" for more information.

Box contents

- 8″ or 10″ T4 In-Wall Touchscreen
- Power box (to power the touchscreen)
- Two screws (to attach the power box to the wall box)
- Set screw (to secure the touchscreen to the power box)
- Set screw tool (3/32″ hex wrench)

Accessories available for purchase

- Pakedge 802.3at/af Gigabit PoE+ Injector (PI-30AT), or Araknis Networks Gigabit PoE+ Injector (AN-ACC-INJ-POE-30W), each sold separately.
- Wall box options (sold separately)—Metal and plastic, for new construction or retrofit installations.
  - In-Wall Touchscreen Wall Box Kits - New Construction
    - Plastic (C4-NWB57C-P)
    - Metal (C4-NWB57C-M)
  - In-Wall Touchscreen Wall Box Kits - Retrofit
    - Plastic (C4-RWB57C-P)
    - Metal (C4-RWB57C-M)

For wall box installation details, see:

- *In-Wall Touchscreen Wall Box Installation Guide—New Construction (ctrl4.co/wallbox-new)*
- *In-Wall Touchscreen Wall Box Installation Guide—Retrofit (ctrl4.co/wallbox-retro)*

Warnings

Warning! The touchscreen must be protected by an external circuit breaker or a fuse rated at 6A maximum when used in Europe.

AVERTISSEMENT ! Pour réduire le risque du feu ou de choc électrique, n'exposez pas cet appareil à la pluie ou à l'humidité.

Warning! Do not place the touchscreen near sources of heat or expose to direct sunlight for an extended period of time.

AVERTISSEMENT ! Ne placez pas l'unité près des sources de chaleur ou exposition pour diriger la lumière du soleil pendant une période prolongée.

Warning! Install in accordance with all national, state, and local electrical codes.

AVERTISSEMENT ! Installez selon tous les national, état, et codes électriques locaux.

Warning! This product generates heat. The room must have adequate ventilation or the ability to dissipate heat effectively.

AVERTISSEMENT ! Ce produit produit de la chaleur. La salle doit avoir à ventilation proportionnée ou la capacité d'absorber la chaleur efficacement.

Warning! This product must be grounded in accordance with the National Electrical Code (NEC) requirements.

AVERTISSEMENT ! Ce produit doit être fondu selon les conditions électriques nationales de code (NEC).

Warning! Use this product only in dry locations.

AVERTISSEMENT ! Employez ce produit seulement dans des endroits secs.

Caution! Do not use pens or sharp objects to navigate or make selections on the touchscreen. To select an item or scroll through a list, use your fingertip.

AVERTISSEMENT ! N'employez pas les stylos ou les objets pointus pour diriger ou pour faire des choix sur l'écran. Pour choisir un article ou un rouleau par une liste, employez votre bout du doigt.

Caution! Improper use or installation can cause DAMAGE OF PROPERTY.

AVERTISSEMENT ! L'utilisation ou l'installation inexacte peut causer DAMAGE DE PROPRIÉTÉ.

Important! Using this product in a manner other than outlined in this document voids your warranty. Further, Control4 is NOT liable for any damage incurred with the misuse of this product. See "Warranty."

Important ! Utilisant ce produit en quelque sorte autre que décrit dans ce document vide votre garantie. De plus, Control4 n'est pas responsable d'aucun dommage encouru avec l'abus de ce produit. Voyez que « Warranty. »

Specifications and requirements

Specifications

Model Numbers	C4-T4IW10-BL, C4-T4IW10-WH, C4-T4IW8-BL, C4-T4IW8-WH
Screen	Resolution: 1920 × 1200, capacitive touch Camera: 720p
Network	Ethernet or Wi-Fi • 802.11b/g/n 2.4 GHz • 802.11a/n/ac 5 GHz • Security: WEP, WPA/WPA2 PSK, 802.1x EAP, PEAP **Notes:** (1) While technically the touchscreen can use 802.11b, 802.11b is not supported. (2) 802.11n is recommended for best performance. Even with 802.11n, broadcasting to several devices will degrade Video Intercom response time and images. Broadcasting to additional devices will further degrade performance. See "Wireless Network Limitations."
Power supply	PoE (IEEE 802.3af) 13 W peak 100-240V AC, 50/60 Hz
Dimensions (W × H × D)	8″ model: 175 × 127 × 13 mm (6.9 × 5.0 × 0.53″) 10″ model: 239 × 165 × 13 mm (9.4 × 6.5 × 0.53″) Wall box: 68 × 104 × 61 mm (2.7 × 4.1 × 2.4″) Power box: 71 × 114 × 46 mm (2.8 × 4.5 × 1.8″)
Weight (with mid-box)	8″ model: 0.41 kg (0.9 lb) 10″ model: 0.68 kg (1.5 lb)
Operating temperature	0 to 40 ˚C (32 to 104 ˚F)
Storage temperature	-20 to 70 ˚C (-4 to 158 ˚F)

Requirements

- A controller fully installed and configured with Control4 OS 3.2.0 or later.
- Control4 Touchscreen wall box installed. See "Accessories."
- If using Ethernet with PoE power:
  - Ethernet network installed and available that includes a gateway/router/switch
  - Control4 PoE Injector (model #AC-POE1-B) or another third-party, UL/ANSI-certified PoE injector or switch.
  - Two Ethernet Cat 5/6 cables: (1) one that runs from the Ethernet gateway/router/switch to the PoE injector/switch and (2) one that runs from the PoE injector/switch to the Ethernet connection in the touchscreen's wall box.
- If using Ethernet with AC power:
  - Ethernet network installed and available that includes a gateway/router/switch
  - Access to in-wall AC power (neutral connection required)
  - One Ethernet Cat 5/6 cable that runs from the Ethernet gateway/router/switch to the touchscreen
  - A 14-gauge electrical wire long enough to pull between the touchscreen and the power source
- If using Wi-Fi with AC power:
  - Wireless network (IEEE 802.11b/g/n) installed and available with a wireless access point (AP). Security can be WEP, WPA/WPA2 PSK, 801.1x EAP, or PEAP.
  - Access to in-wall AC power (neutral connection required)
  - A 14-gauge electrical wire long enough to pull between the touchscreen and the power source

Front view

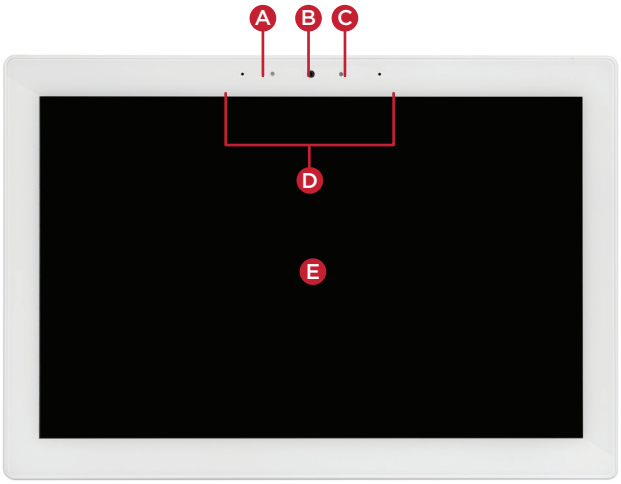

A Indicator LED (startup, camera in use, audio listening)
B Camera
C Ambient light sensor
D Stereo microphones
E 8″ or 10″ diagonal, capacitive 1920 × 1200 display

Back view

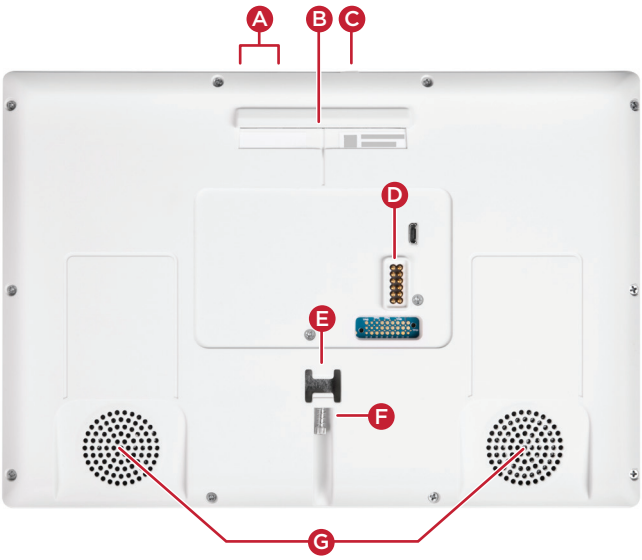

A **Reset pinhole buttons**—For resetting and restoring the touchscreen to factory default settings.
B **Upper mount tab**
C **Power**—Press this button to turn the touchscreen on, or press and hold it to turn the touchscreen off.
D **Docking electrical connector**
E **Locking tab**
F **Set screw**—secures the touchscreen to the power box.
G **Stereo speakers**

Top view

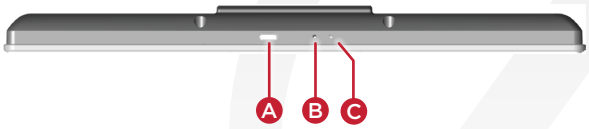

A Power button. Press to turn the display on and off, press and hold to select **Power off** or **Restart**, or press and hold for 10 seconds to reset the device.
B Center pinhole. Not used.
C Reset pinhole. Press to reset, or press and hold until "Erasing" appears on the screen to restore factory defaults.

Touchscreen placement

Place the touchscreen in a convenient location at eye level, typically near the entrance of the room, about 145 to 155 cm (57 to 61 inches) from the floor (Figure 3).

Note: Consider the camera on the panel and the height of the people in the home who will use the camera for Video Intercom.

Important: The top of the touchscreen must be mounted no higher than 2 m (6.6 ft.) above the floor.

Figure 1: Touchscreen placement

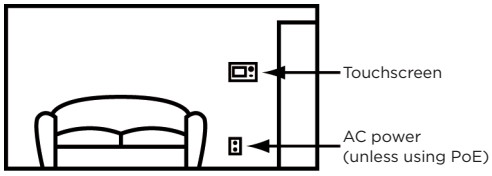

LED indicator

The LED on the touchscreen indicates the camera status of the camera and booting information as described in the next table.

Camera/LED color state	Touchscreen status
Off	Camera is off
Green	Camera is on
Green (blinking slowly)	Touchscreen is booting

Installation

Warning! Before installing the touchscreen, switch off the circuit breaker or remove the fuse from the fuse box.

AVERTISSEMENT ! Pour l'endroit où vous installez l'écran tactile, coupez le disjoncteur ou enlevez le fusible de la boîte de fusible.

Important! Before you can complete the instructions below, you must have an 8″ or 10″ Touchscreen wall box installed according to the documentation provided in the wall box kit. See "Accessories" for details.

Important ! Avant de lire les instruction ci-dessous, il vous faut un support mural installé suivant la documentation fournie avec le kit du support mural. Plus de détails dans la partie << Accessoires >>.

Important! When cutting the opening for the wall box, **do not** cut the opening too large. Be conservative and cautiously enlarge it as needed.

Important ! En coupant l'ouverture pour le support mural, ne faites pas une ouverture trop grande. Soyez prudent, et agrandissez la avec précaution.

Power and network installation options

This device uses an Ethernet or Wi-Fi network connection and can be powered using PoE or AC power.

Choose one of the following options to install the power and network communication.

Caution! Do not attempt to use PoE and AC power at the same time. Choose only one power option.

ATTENTION ! Ne pas tenter d'utiliser PoE et AC en même temps. Choisir une seule option d'alimentation.

Option 1: Ethernet connection with PoE

PoE supplies DC power on the Ethernet cable using a PoE Injector (model #AC-POE1-B) or a third-party PoE solution to provide the touchscreen with power and a network connection. The touchscreen works with the Control4 PoE Injector or a third-party PoE Injector.

To set up your PoE and Ethernet connection with a PoE Injector:

1. Attach the PoE Injector according to the instructions in your PoE's installation guide if provided. Control4 PoE Injector instructions are provided later in this document.
2. Pull the Ethernet cable from that location to where you want to install the touchscreen.

Figure 2: Ethernet with PoE—Requires Ethernet connection to PoE injector

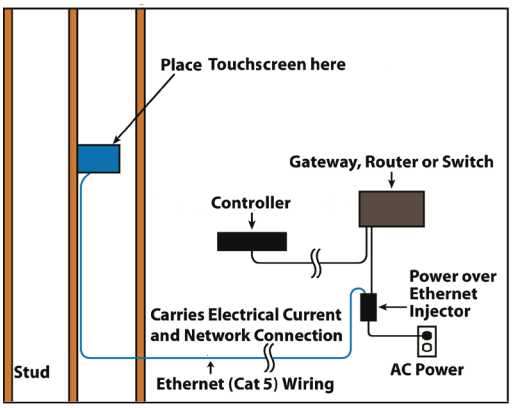

Option 2: Ethernet connection with AC

The Ethernet is connected directly to the switch (Figure 5). This power connection requires both neutral and hot connections.

Figure 3: Ethernet—Requires a connection to Ethernet and AC power

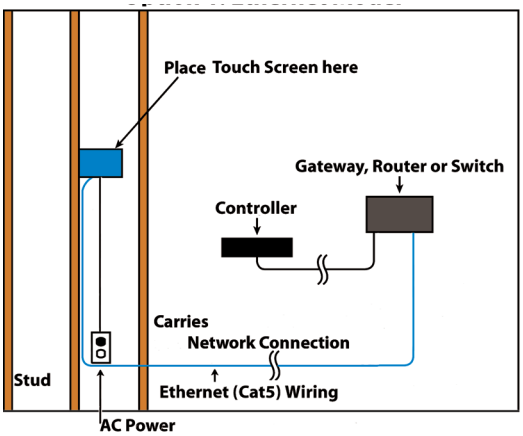

Option 3: Wi-Fi connection with AC

Place the touchscreen above a power source, for example, an outlet. Ensure that you have Wi-Fi in the home (Figure 6).

Important: The touchscreen cannot connect to a Wi-Fi network when already connected by Ethernet.

Notes: (1) Video Intercom. Although this device supports 802.11b/g/n, 802.11 b is not recommended for Video Intercom use. (2) We recommend Wireless-N for Video Intercom. See the *Composer Pro User Guide* for details about the touchscreen's properties.

Wireless Network Limitations: Many Wi-Fi Access Points handle Multicasts (Wi-Fi simultaneously sent to multiple devices, for example, when the touchscreen broadcasts video to all stations) by slowing down transmission speed to the 1 Mb basic rate. This can cause overall Wi-Fi congestion in the Wi-Fi network during the broadcast. Video Intercom response times and images may degrade at each device.

If a home requires a large number of Wi-Fi Video Intercom devices, ensure that you have a robust Wi-Fi network (possibly consisting of multiple access points).

Figure 4: Wi-Fi—Requires AC power and AP

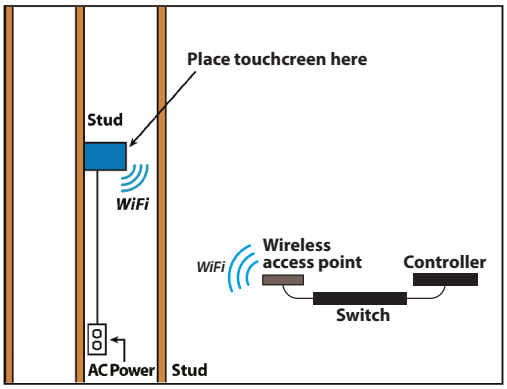

Power installation

Prepare the plastic power box for installation into the wall box by inserting either the Ethernet cable or the AC power cable into the power box, and then follow the instructions.

Connecting PoE

Connect the PoE injector to power and the network, and then connect it to the power box. It can be located anywhere along the cable that connects the power box to the network switch.

To install a Control4 PoE injector:

1. Connect the Control4 PoE injector to an AC outlet using the power cord.
2. Connect one of the LAN ports on the network switch to the PoE Injector's **LAN** port using Cat 5/6 Ethernet cable.
3. Pull a cable going from the PoE injector's **PWR LAN-OUT** port through one of the touchscreen's left-side wall box knockout holes.
4. Go to "Connecting to a wired network" below.

Connecting to a wired network

To connect to a wired network:

1 Pull the in-wall Ethernet cable through a left-side knockout hole of the wall box, then plug it into the Ethernet jack on the back of the power box (Figure 8).

Figure 5: Insert Ethernet cable into power box

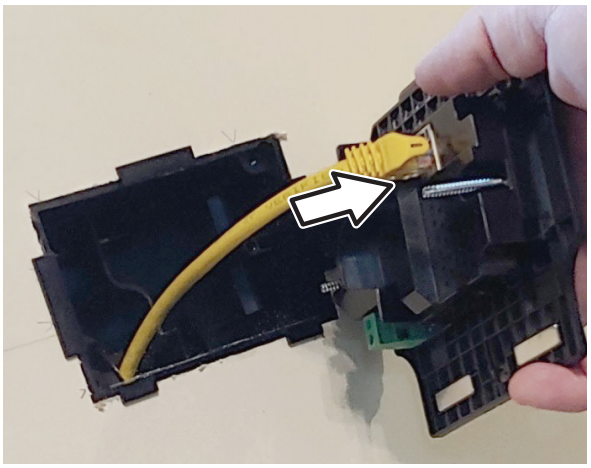

Note: The Ethernet port on the power box does not have functioning indicator LEDs.

2 Go to "Attach the power box and touchscreen" below.

Connecting AC power

The steps below represent a typical U.S. installation.

Caution: Use only 14 AWG wire for AC connections. For supply connections, use wires suitable for at least 60 °C (140 °F).

1 Connect the wires to the AC power source for the touchscreen according to national and local electrical codes. Installation may require alternative wires and the use of the included terminal block.

2 Pull the power cable through a right-side knockout hole of the wall box to the terminal block.

3 Strip the black and white power wire ends to 1/4″ as necessary. Using a flat-head screwdriver, loosen the screws on the power box's terminal block and connect the power wires to each terminal (Figure 5), then tighten the screws.

Figure 6: Connect AC power to terminal block

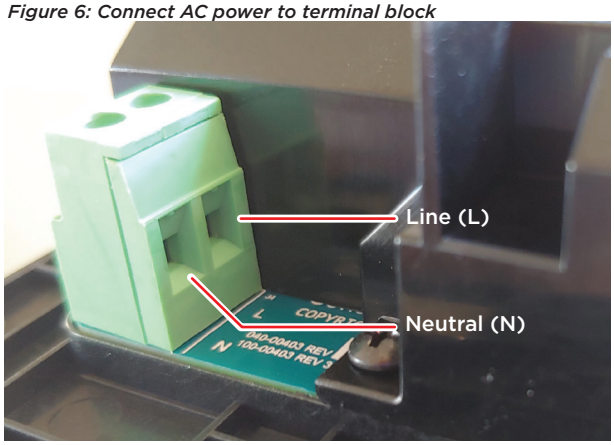

4 If using a plastic wall box with an exposed bare copper ground, wrap the ground in electrical tape or heat shrink tape/tubing. If using a metal wall box, attach the ground wire to the wall box.

Attach the power box and touchscreen

To attach the power box and touchscreen:

1 Align and bend the wires to fit them inside the wall box.

2 Slide the power box into the wall box, then secure the power box to the wall box using the two screws provided (Figure 6).

Caution: Do not use an electric driver to tighten the screws. Overtightening can result in the power box becoming slightly warped, resulting in a poor electrical docking connection. Use only a hand screwdriver to tighten the screws.

Tip: If overtightened screws result in the power box warping, loosen the screws until the power box is flush to the wall.

Figure 7: Secure power box to wall box

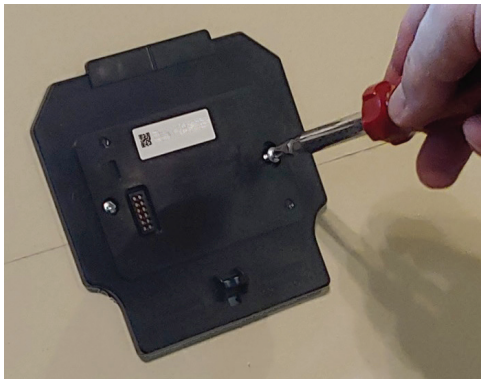

3 Angle the top of the touchscreen toward the wall, insert the top mounting bracket onto the power box, then press the bottom of the touchscreen into place (a magnet will hold it in position).

Figure 8: Attach the touchscreen top first

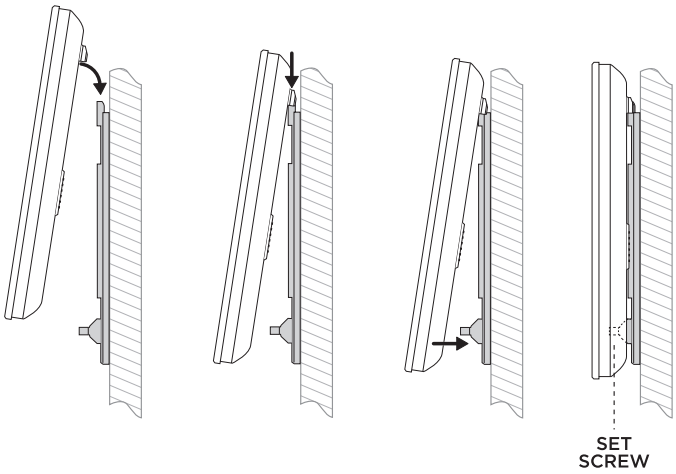

4 Secure in place with the included set screw and 3/32″ hex wrench.

Configuration

Configure the touchscreen for wireless (optional)

To configure the touchscreen for wireless:

1. After initialization, tap **Network**. The network configuration page opens.
2. Under *Wi-Fi*, tap or slide **OFF/ON** to enable WiFi, then tap the **Wi-Fi** field to open a list of available networks.
3. Tap the network name you want to connect to.
4. Tap the **Password** field, then use the on-screen keyboard to type the password (if required).

   Note: If you need to enter a static IP address, follow the instructions under "To set a wireless static IP address" below before proceeding.
5. Tap **Connect**.

If you don't see the network you want:

1. Tap **+**, then tap the **Network SSID** field and type the SSID (name) of the network by using the on-screen keyboard.
2. Tap the **Security** field, then select the type of security to use.
3. Tap the **Password** field, then use the on-screen keyboard to type the password (if required).

   Note: If you need to enter a static IP address, follow the instructions under "To set a wireless static IP address" below before proceeding.
4. Tap **Save**. The new network is added to the bottom of the network list.

To set a wireless static IP address:

1. Scroll down and tap **Show advanced options**.
2. Tap **IP settings**, then tap **Static**.
3. Select each box one at a time and use the on-screen keyboard to type the:
   - **IP address**
   - **Gateway**
   - **Network prefix length**
   - **DNS 1** (preferred)
   - **DNS 2** (alternate)

Configure the touchscreen for Ethernet

If you want to use DHCP (default) for your Ethernet connection, no further setup is required.

To configure a static IP address for Ethernet:

1. After initialization, tap **Network**. The network configuration page opens.
2. Tap **Ethernet**. The Ethernet settings screen opens.
3. Tap **Static IP Settings**, then tap **Use static IP**.
4. Select each box one at a time and use the on-screen keyboard to type the **IP Address**, **Gateway**, **Netmask**, **DNS 1** (preferred), and **DNS 2** (alternate).
5. Tap **SAVE** when finished.

Add and configure in Composer Pro

After the touchscreen is installed and appears on the home network, use Composer Pro to add it to the Control4 system and configure it.

Use the Composer Pro *System Design* and *Connections* views to add and configure this device.

To add and configure a T4 touchscreen to a project:

1. Add the **T4 8/10″ In-Wall Touchscreen** driver to your project.
2. Select the touchscreen or its Intercom component in the project tree's **System Design** view.
3. View and change the properties in the *Properties* pane as needed.

   Properties include:

   - **Network Connection**—Reports the touchscreen's current network connection type.
   - **Back Light**—Use the arrows or type numbers to set the light level, then click **Set**.
   - **Adaptive Brightness Enabled**—Enables or disables adaptive brightness.

   Advanced properties include:

   - **Camera Enabled**—Enables or disables the camera.
   - **Reboot**—Remotely reboots the touchscreen.

   Intercom (nested under the touchscreen) properties:

   - **Appearance**
     - **Exclude from Navigator**—Select to hide the touchscreen from appearing in user interfaces as an available device.
     - **High Quality Enabled**—Select to use the highest resolution setting for the camera.
     - **Dial Pad UI Enabled**—Enables the on-screen dial pad.
   - **Behavior**
     - Select the modes you want this touchscreen to support: Play Door Chime, Do Not Disturb, Auto Answer, Send Video, Monitor Mode, Echo Calibration, Disable Echo Cancellation.
   - **Audio Control**—Select the volume of individual audio settings.
   - **Sip Information**—Information for integrating the touchscreen into your SIP/VoIP system.
   - **Custom Buttons**—Select to enable and label the two available custom buttons
   - **Alternate Camera**—Select to use an external camera for the video associated with the touchscreen, for example, a security camera mounted to the side of the person operating the touchscreen.

Troubleshooting

Boot up time

When the device is booting up, it may take 30 seconds or longer before the Green LED turns on. When it turns on, it blinks slowly for a time and then turns off. After that, you'll see an image on the touchscreen (either the setup menu or the room's home screen).

Unresponsive screen

If the camera's LED blinks on and off for more than 30 seconds, the device may need to be power cycled. If power cycling doesn't solve the problem, the touchscreen may need to be restored to factory defaults.

To power cycle the touchscreen:

1. Press and hold the power button for several seconds until the touchscreen turns off.
2. Press and release the power button again to turn back on.

To restore to factory defaults:

1. On the touchscreen's main screen, tap **Settings**, **System Info**, then **Factory data reset**.

   - OR -

   If the touchscreen has not yet been configured, tap **About**, then **Factory data reset**.

   - OR -

   To reset without using the display screen, insert a straightened paper clip into the *left* pinhole on top of the touchscreen, then press and hold it while pressing the **RESET** (right) pinhole button for several seconds until the the icon below appears on the display.

Removing the touchscreen from the wall

To remove the touchscreen:

1. Remove the 3/32″ set screw.
2. Pull the bottom of the touchscreen away from the locking tab, then lift the screen up and off the power box.

Figure 9: Lift bottom away and lift up

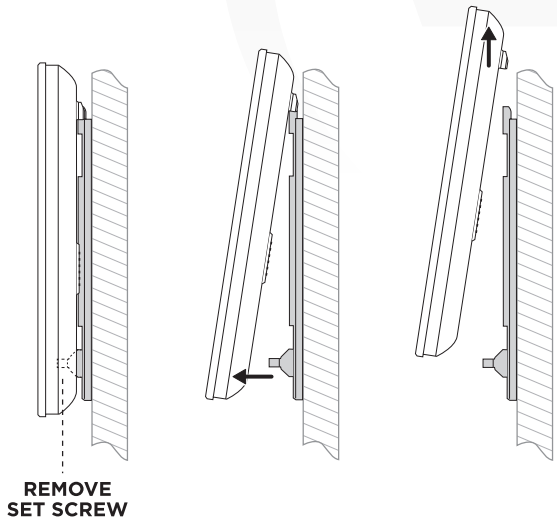

Additional resources

The following resources are available for additional support.

- Knowledgebase and forums in Technician Community
- Technical Support
- Control4 website: **www.control4.com**
- Composer documentation in its online help.

Warranty and legal notices

Find details of this product's 2-Year Limited Warranty at **snapav.com/warranty**, or request a paper copy from Customer Service at (866) 424-4489. Find other legal resources, such as regulatory notices and patent information, at **snapav.com/legal**.

More help

For the latest version of this document, open this URL or scan the QR code on a device that can view PDFs.

LATEST VERSION OF THIS DOCUMENT

ctrl4.co/t4-inwall-ig

WALL BOX INSTALL: NEW CONSTRUCTION

ctrl4.co/wallbox-new

WALL BOX INSTALL: RETROFIT

ctrl4.co/wallbox-retro

Control4

control4.com | 888.400.4070

Copyright ©2020, Wirepath Home Systems, LLC. All rights reserved. Control4 and Snap AV and their respective logos are registered trademarks or trademarks of Wirepath Home Systems, LLC, dba "Control4" and/or dba "SnapAV" in the United States and/or other countries. Snap AV and Wirepath are also registered trademarks or trademarks of Wirepath Home Systems, LLC. Other names and brands may be claimed as the property of their respective owners. All specifications subject to change without notice.

B

200-00678-B
2020-10-20 MS

In-Wall Touchscreen Wall Box - New Construction

Installation Guide

Introduction

This wall box kit provides a wall box (back box) to accommodate the installation of in-wall touchscreens. The kit is intended for new construction where drywall is not yet in place. Along with the wall box, the kit contains a stud plate for attachment to a wall stud before drywall installation.

Supported touchscreen models

- C4-T4IW8-BL — 8″ T4 In-Wall Touchscreen, Black
- C4-T4IW8-WH — 8″ T4 In-Wall Touchscreen, White
- C4-T4IW10-BL — 10″ T4 In-Wall Touchscreen, Black
- C4-T4IW10-WH — 10″ T4 In-Wall Touchscreen, White

Also supports these legacy touchscreens:

- C4-WALL7 — T3-7 7″ In-Wall Touchscreen
- C4-WALL10 — T3-10 10″ In-Wall Touchscreen
- C4-TSWMC5-EG — 5″ In-Wall Touchscreen
- C4-TSWMC7-EG — 7″ In-Wall Touchscreen
- C4-TW7C0 — 7″ In-Wall Touchscreen with Camera
- For more installation instructions specific to legacy touchscreens, see earlier versions of this guide.

Box contents

The following items are included in the kit:

- In-Wall Touchscreen Wall Box - New Construction
- Ferrite clamps: two rectangular, one round
- Plastic wall boxes include two screws. Metal wall boxes include four screws (2 short, 2 long)

Tools needed

- Tape measure and pencil
- Hammer or screwdriver
- A 5/16″ nut driver or socket wrench (metal wall box only)
- Nails or screws (4 to 6)

  Warning! Before you install the wall box, ensure that you've turned off the power to the wires that will be attached to the box.

  Attention ! Avant d'installer le boîtier arrière, assurer vous d'avoir désactivé le pouvoir sur les fils qui seront attachées à la boîte.

Specifications

Dimensions: 68 x 104 x 81 mm (2.7 x 4.1 x 3.19″)

Plastic wall box model (C4-NWB57C-P)

A Dovetail socket (on both sides to reverse position)
B Stud plate

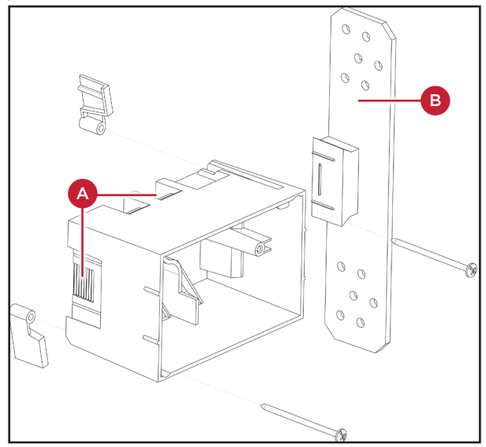

Metal wall box model (C4-NWB57C-M)

A Mounting location (on both sides to reverse position)
B Stud plate

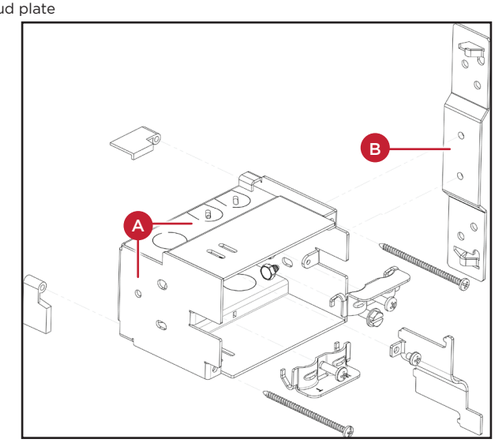

Installing the wall box

Note: This kit is intended for installation of a wall box before drywall installation. If the drywall is in place, use kits intended for retrofit (C4-RWB57C-P or C4-RWB57C-M). For more information, visit the product pages at ctrl4.co/boxnewp and ctrl4.co/boxnewm.

To install this wall box:

1. Find an appropriate wall box location for the touchscreen you are installing:
   - The wall box should be in a convenient location, for example, near the entrance of a room.
   - The wall box should be at eye level, about about 1.5 meters (57 to 61 inches) from the floor.

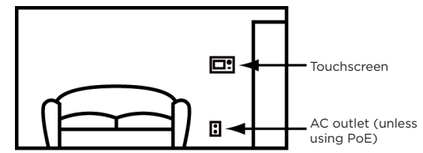

   - When using Ethernet or PoE, the wall box should be near a location where an Ethernet Cat 5/6 cable is pulled.
   - When using AC power, position the wall box above or near an AC power source, such as an AC outlet.
2. Hold the wall box and stud plate against the nearest stud, then mark the correct position according to your choices in Step 1. Follow these guidelines:
   - **a** Place the wall box so that, when mounted, it is flush with the surface of the drywall after the drywall is installed. For example, if the drywall is 3/8 of an inch deep, the front rim of the wall box must be 3/8 of an inch above the wall stud (toward you).

     Important: Make sure the wall box is flush with the wall after the drywall is installed. Allow 3/8 of an inch before the drywall is installed (depending on the thickness of the drywall), and err toward 5/16 inch for the best fit.
   - **b** Install the wall box according to the arrows inside the box that indicate the correct side up.

     Important: For safety, install the wall box with the correct side up.
   - **c** Install the wall box with the stud plate on either the right or the left side, depending on which wall stud you choose. You may detach the stud plate from the wall box on one side and reattach it on the opposite side, if needed.
3. Detach the stud plate from the wall box.
   - Plastic box: Slide the wall plate toward the back of the wall box.
   - Metal box: Unscrew the wall box from the stud plate.

   This allows you to attach the stud plate to the wall stud without interference from the wall box.
4. Align the stud plate with the marks you made on the stud (Step 2). If you are using a plastic wall box, make sure the dovetail is toward the back of the stud plate (away from you).
5. Nail or screw the stud plate to the wall stud.
   Recommended hardware: #9/3.5 mm wood screw or 6D/3 mm nail.
6. Mount the wall box to the stud plate.
   - Plastic box: Slide the wall box onto the stud plate dovetail all the way, leaving the wall box protruding the depth of the drywall, or slightly less (Step 2a).
   - Metal box: Bolt the wall box back onto the stud plate.

     Note: If you are using a metal box, you can continue to adjust its angle and position slightly relative to the drywall.
7. When running cables into the wall box, use a left-side knockout for the Ethernet cable, and use a right-side knockout for the AC power (if used).

   Note: The left (low-voltage) and right (high-voltage) sides of the wall box are separated by a barrier. Low-voltage connections must be pulled through a knockout on the left side, and high-voltage on the right.

   Caution: Use only 14 AWG wire for AC connections. For supply connections, use wires suitable for at least 60 °C (140 °F).
8. Install the drywall as you would normally, making sure to cut the size of the hole accurately.
9. After you install the drywall, carefully tighten the screws to pull in the securing tabs so that the wall box is flush with the surface of the wall.

   Important: In the metal wall box kit, the two longer screws are for use with the T4, the shorter for use with the T3.

   Note: Overtightening the screws may pull the box into the wall.

   Important: When you are ready to install the drywall, and you are cutting the opening for the wall box, *do not* cut the opening too large. Be conservative and enlarge the hole as needed.

Additional resources

The following resources are available for additional support.

- Knowledgebase and forums in Technician Community
- Technical Support
- Control4 website: www.control4.com
- Composer documentation in its online help.

Warranty and legal notices

Find details of this product's 2-Year Limited Warranty at snapav.com/warranty, or request a paper copy from Customer Service at (866) 424-4489. Find other legal resources, such as regulatory notices and patent information, at snapav.com/legal.

More help

For the latest version of this document, open this URL or scan the QR code on a device that can view PDFs.

MOST RECENT VERSION
ctrl4.co/wallbox-new

T4 IN-WALL TOUCHSCREEN INSTALL GUIDE
ctrl4.co/t4-inwall-ig

Copyright ©2020, Wirepath Home Systems, LLC. All rights reserved. Control4 and Snap AV and their respective logos are registered trademarks or trademarks of Wirepath Home Systems, LLC, dba "Control4" and/or dba "SnapAV" in the United States and/or other countries. Snap AV and Wirepath are also registered trademarks or trademarks of Wirepath Home Systems, LLC. Other names and brands may be claimed as the property of their respective owners. All specifications subject to change without notice.

J
200-00165-J
2020-10-20 MS

Regulatory Compliance & Safety Information for Model C4-T4IW8-WH, C4-T4IW8-BL, C4-T4IW10-WH, C4-T4IW10-BL

Electrical Safety Advisory
Sécurité électrique consultatif

Important Safety Instructions

Consignes de sécurité importantes

Read the safety instructions before using this product.

Lisez les consignes de sécurité avant d'utiliser ce produit.

1. Read these instructions.
   Lisez ces instructions.
2. Keep these instructions.
   Conservez ces instructions.
3. Heed all warnings.
   Respectez tous les avertissements.
4. Follow all instructions.
   Suivez toutes les instructions.
5. Do not use this apparatus near water.
   Ne pas utiliser cet appareil près de l'eau.
6. Clean only with dry cloth.
   Nettoyez-le uniquement avec un chiffon sec.
7. Do not block any ventilation openings. Install in accordance with the manufacturer's instructions.
   Ne pas bloquer les ouvertures de ventilation. Installer conformément aux instructions du fabricant.
8. Do not install near any heat sources such as radiators, heat registers, stoves, or other apparatus (including amplifiers) that produce heat.
   Ne pas installer près de sources de chaleur telles que des radiateurs, registres de chaleur, poêles, ou autres appareils (incluant les amplificateurs) qui produisent de la chaleur.
9. Do not defeat the safety purpose of the polarized or grounding-type plug. A polarized plug has two blades with one wider than the other. A grounding type plug has two blades and a third grounding prong. The wide blade or the third prong is provided for your safety. If the provided plug does not fit into your outlet, consult an electrician for replacement of the obsolete outlet.
   Ne pas contourner le dispositif de sécurité de la fiche polarisée ou de mise à la terre. Une fiche polarisée possède deux lames dont une plus large que l'autre. Une fiche de terre a deux lames et une troisième broche de terre. La lame large ou la troisième broche est

fournie pour votre sécurité. Si la fiche fournie ne s'adapte pas à votre prise, consultez un électricien pour le remplacement de la prise obsolète.

10. Only use attachments/accessories specified by the manufacturer.

    Utilisez uniquement des fixations / accessoires spécifiés par le fabricant.

11. Use only with the cart, stand, tripod, bracket, or table specified by the manufacturer, or sold with the apparatus. When a cart is used, use caution when moving the cart/apparatus combination to avoid injury from tip-over.

    Utilisez uniquement avec le chariot, le socle, le trépied, le support ou la table spécifiés par le fabricant ou vendu avec l'appareil. Lorsque vous utilisez un chariot, soyez prudent lorsque vous déplacez l'ensemble chariot / appareil pour éviter des blessures dues au renversement.

12. Unplug this apparatus during lightning storms or when unused for long periods of time.

    Débranchez cet appareil pendant les orages ou lorsqu'il n'est pas utilisé pendant de longues périodes de temps.

13. Warning! Install this equipment in accordance with all national, state, and local electrical codes and must be completed by a certified electrician. For supply connections use 14 AWG only that is suitable for at least 600C. This equipment must be mounted at height less than or equal to 2m. This equipment may only be used with, and requires the use of, one of the following separately certified Wall-Box models, C4-NWB57C-M, C4-NWB57C-P, C4-RWB57C-M, C4-RWB57C-P.

    Attention! Installez cet équipement conformément à tous les codes électriques nationaux, provinciaux et locaux et doit être effectué par un électricien certifié. Pour les connexions d'alimentation, utilisez uniquement 14 AWG qui convient à au moins 600C. Cet équipement doit être monté à une hauteur inférieure ou égale à 2 m. Cet équipement ne peut être utilisé qu'avec l'un des modèles de boîtiers muraux certifiés séparément suivants, C4-NWB57C-M, C4-NWB57C-P, C4-RWB57C-M, C4-RWB57C-P.

14. Refer all servicing to qualified service personnel. Servicing is required when the apparatus has been damaged in any way, such as power-supply cord or plug is damaged, liquid has been spilled or objects have fallen into the apparatus, the apparatus has been exposed to rain or moisture, does not operate normally, or has been dropped.

    Confiez toutes les réparations à un personnel qualifié. Une réparation est nécessaire lorsque l'appareil a été endommagé de quelque façon que ce soit le cordon d'alimentation ou la fiche est endommagé, du liquide a été renversé ou si des objets sont tombés dans l'appareil, l'appareil a été exposé à la pluie ou à l'humidité, ne fonctionne pas normalement, ou s'il est tombé.

15. This equipment uses AC power which can be subjected to electrical surges, typically lightning transients which are very destructive to customer terminal equipment connected to AC power sources. The warranty for this equipment does not cover damage caused by electrical surge or lightning transients. To reduce the risk of this equipment becoming damaged it is suggested that the customer consider installing a surge arrestor.
    Cet équipement utilise la puissance AC qui peuvent être soumis à des surtensions électriques, la foudre généralement transitoires qui sont très destructives envers les équipements terminaux connectés à des sources d'alimentation CA. La garantie de cet

appareil ne couvre pas les dommages causés par les surtensions électriques ou transitoires de foudre. Pour réduire le risque de cet équipement devient endommagé, il est suggéré que le client envisager l'installation d'un limiteur de surtension.

16. To completely disconnect unit power from the AC mains, turn off the circuit breaker. To reconnect power, turn on the circuit breaker following all safety instructions and guidelines. The circuit breaker shall remain readily accessible.

    Pour déconnecter complètement l'alimentation de l'unité du secteur, désactivez le disjoncteur. Pour rebrancher l'alimentation, activez le disjoncteur en suivant toutes les instructions et directives de sécurité. Le disjoncteur doit rester facilement accessible.

17. This product relies on the buildings installation for short-circuit (overcurrent) protection. Ensure that the protective device is rated not greater than: 20A.
    Ce produit repose sur l'installation des bâtiments pour les courts-circuits (surintensité) de protection. Assurez-vous que le dispositif de protection est assignée ne dépassant pas: 20A.

18. Never push objects of any kind into this product through cabinet slots as they may touch dangerous voltage points or short out parts that could result in fire or electric shock.

    N'introduisez jamais d'objets d'aucune sorte dans ce produit à travers les fentes du boîtier car ils pourraient toucher des points de tension dangereux ou court-circuiter des pièces qui pourraient entraîner un incendie ou un choc électrique.

19. This product can interfere with electrical equipment such as tape recorders, TV sets, radios, computers and microwave ovens if placed in close proximity.

    Ce produit peut interférer avec des appareils électriques tels que les magnétophones, téléviseurs, radios, ordinateurs et fours à micro-ondes si placés à proximité.

The lightning flash and arrow head within the triangle is a warning sign alerting you of dangerous voltage inside the product
L'éclair et la flèche dans le triangle est un signe d'alerte pour vous avertir d'une tension dangereuse à l'intérieur du produit

Caution: To reduce the risk of electric shock, do not remove cover (or back). No user serviceable parts inside. Refer servicing to qualified service personnel.
Attention: Pour réduire le risque de choc électrique, ne pas retirer le couvercle (ou l'arrière). Aucune pièce réparable par l'utilisateur. Confiez l'entretien à un personnel qualifié.

The exclamation point within the triangle is a warning sign alerting you of important instructions accompanying the product.
Le point d'exclamation dans un triangle est un signe d'avertissement vous signale des instructions importantes accompagnant le produit.

See marking on bottom / back of product
Voir le marquage sur les bas / dos du produit

Warning!: To reduce the risk of electrical shock, do not expose this apparatus to rain or moisture
AVERTISSEMENT! Pour réduire le risque de choc électrique, n'exposez pas cet appareil à la pluie ou à l'humidité.

Save these instructions

Conservez ces instructions

Compliance of this equipment is confirmed by the following label that is placed on the equipment:
Conformité de cet appareil est confirmé par le symbole suivant qui est placé sur l'équipement:

USA & Canada Compliance

FCC Part 15, Subpart B & IC Unintentional Emissions Interference Statement

This equipment has been tested and found to comply with the limits for a Class B digital device, pursuant to Part 15 of the FCC rules. These limits are designed to provide reasonable protection against harmful interference when the equipment is operated in a residential installation. This equipment generates uses and can radiate radio frequency energy and, if not installed and used in accordance with the instructions, may cause harmful interference to radio communications. However, there is no guarantee that interference will not occur in a particular installation. If this equipment does cause harmful interference to radio or television reception, which can be determined by turning the equipment off and on, the user is encouraged to try to correct the interference by one or more of the following measures:

- Reorient or relocate the receiving antenna.
- Increase the separation between the equipment and receiver.
- Connect the equipment into an outlet on a circuit different from that to which the receiver is connected.
- Consult the dealer or an experienced radio/TV technician for help.

This device complies with part 15 of the FCC rules and ISED's license-exempt RSSs. Operation is subject to the following two conditions: (1) This device may not cause harmful interference, and (2) this device must accept any interference received, including interference that may cause undesired operation.

Cet appareil est conforme à la section 15 des règles de la FCC et ISED's aux RSS exempts de licence d'ISED. Son utilisation est soumise aux deux conditions suivantes: (1) Cet appareil ne doit pas causer d'interférences nuisibles et (2) cet appareil doit accepter toutes les interférences reçues, y compris celles pouvant entraîner un fonctionnement non souhaité.

IMPORTANT! Any changes or modifications not expressly approved by the party responsible for compliance could void the user's authority to operate this equipment.

IMPORTANT! Tous les changements ou modifications pas expressément approuvés par la partie responsable de la conformité ont pu vider l'autorité de l'utilisateur pour actionner cet équipement.

Canada Warning Statement:

CAN ICES-3 (B)/NMB-3(B)
• This product meets the applicable Innovation, Science and Economic Development Canada technical specifications.
• Ce produit répond aux spécifications techniques applicables à l'innovation, Science et Développement économique Canada.

FCC Part 15, Subpart C / RSS-247 Intentional Emissions Interference Statement

Compliance of this equipment is confirmed by the following certification numbers that are placed on the equipment:

Notice: The term “FCC ID:” and “IC:” before the certification number signifies that FCC and Industry Canada technical specifications were met.

FCC ID: 2AJACT4TS
IC: 7848A-T4TS

This equipment must be installed by qualified professionals or contractors in accordance with FCC Part 15.203 & IC RSS-247, Antenna Requirements. Do not use any antenna other than the one provided with the unit.

Operations in the 5.15-5.25GHz band are restricted to indoor usage only.

Caution :

(i) the device for operation in the band 5150-5250 MHz is only for indoor use to reduce the potential for harmful interference to co-channel mobile satellite systems;

(ii) the maximum antenna gain permitted for devices in the band 5725-5850 MHz shall be such that the equipment still complies with the e.i.r.p. limits specified for point-to-point and non-point-to-point operation as appropriate; and

(iii) Users should also be advised that high-power radars are allocated as primary users (i.e. priority users) of the bands 5650-5850 MHz and that these radars could cause interference and/or damage to LE-LAN devices.

Avertissement:

(i) les dispositifs fonctionnant dans la bande 5150-5250 MHz sont réservés uniquement pour une utilisation à l’intérieur afin de réduire les risques de brouillage préjudiciable aux systèmes de satellites mobiles utilisant les mêmes canaux;

(ii) le gain maximal d'antenne permis (pour les dispositifs utilisant la bande de 5725 à 5 850 MHz) doit être conforme à la limite de la p.i.r.e. spécifiée pour l'exploitation point à point et l’exploitation non point à point, selon le cas;

(iii) De plus, les utilisateurs devraient aussi être avisés que les utilisateurs de radars de haute puissance sont désignés utilisateurs principaux (c.-à-d., qu’ils ont la priorité) pour les bandes 5650-5850 MHz et que ces radars pourraient causer du brouillage et/ou des dommages aux dispositifs LAN-EL.

FCC Partie 15, sous-partie C / RSS-247 Déclaration volontaire des émissions interférences

Conformité de cet appareil est confirmé par les chiffres de certification suivants qui sont placés sur l'équipement:

Avis: Le terme «FCC ID:" et "IC:" devant le numéro de certification signifie que les spécifications techniques de la FCC et d'Industrie Canada ont été respectées.

FCC ID: 2AJACT4TS
IC: 7848A-T4TS

Cet équipement doit être installé par des professionnels qualifiés ou entrepreneurs conformément aux normes FCC partie 15.203 & IC RSS-247, Exigences d'antenne. Ne pas utiliser une antenne autre que celui fourni avec l'appareil.

Cet émetteur ne doit pas être localisé ou fonctionner avec d'autres antennes ou transmetteurs. Les opérations dans la bande 5.15-5.25GHz sont limitées à l'utilisation à l'intérieur seulement.

RF Radiation Exposure Statement

This equipment complies with FCC RF and IC radiation exposure limits set forth for an uncontrolled environment. This equipment should be installed and operated with a minimum distance of 20 centimeters between the radiator and your body or nearby persons.

Déclaration d'exposition aux radiations RF

Cet équipement est conforme aux limites d'exposition aux rayonnements RF et IC de la FCC définies pour un environnement non contrôlé. Cet équipement doit être installé et utilisé avec une distance minimale de 20 centimètres entre le radiateur et votre corps ou des personnes proches.

Europe Compliance

Compliance of this equipment is confirmed by the following logo that is placed on the product ID label that is placed on the bottom of the equipment. The full text of the EU Declaration of Conformity (DoC) is available on the regulatory webpage:

This product can be put into service in all of the EU member states, European Free Trade Association (EFTA) and EU candidate countries without any restriction.

BE	BG	CZ	DK
DE	EE	IE	EL
ES	FR	HR	IT
CY	LV	LT	LU
HU	MT	NL	AT
PL	PT	RO	SI
SK	FI	SE	UK
IS	LI	NO	CH
MK	AL	RS	TR

The frequency and maximum transmitted power in EU are listed as below:
2412 - 2472 MHz: +15 dBm
5180 - 5240 MHz: +17 dBm

WLAN 5GHz:
Operations in the 5.15-5.35GHz band are restricted to indoor usage only.

Recycling

Wirepath Home Systems, LLC understands that a commitment to the environment is essential for a health life and sustainable growth for future generations. We are committed to supporting the environmental standards, laws, and directives that have been put in place by various communities and countries that deal with concerns for the environment. This commitment is represented by combining technological innovation with sound environmental business decisions.

WEEE Compliance

Wirepath Home Systems, LLC is committed to meeting all requirements of the Waste Electrical and Electronic Equipment (WEEE) directive (2012/19/EC). The WEEE directive requires the manufacturers of electrical and electronic equipment who sell in EU countries: (1) label their equipment to notify customers that it needs to be recycled, and (2) provide a way for their products to be appropriately disposed of or recycled at the end of their product lifespan. For collection or recycling of Wirepath Home Systems, LLC products, please contact your local Wirepath Home Systems, LLC representative or dealer.

Australia & New Zealand Compliance

Compliance of this equipment is confirmed by the following logo that is placed on the product ID label that is placed on the bottom of the equipment.

About this Document

Copyright © 2020 Wirepath Home Systems, LLC All rights reserved.