LTE700+CDMA/GSM850+PCS/GSM1900+AWS Full Band Series Repeater

SM-F13CPAL; SM-F10CPAL; SM-CW33CPAL; SM-C33CPAL

1. SAFETY WARNINGS 3

2. INTRODUCTION 3

3. SYSTEM CHARACTERISTICS 4

3.1. FEATURES 4
3.2. APPEARANCE OF THE REPEATERS 5

4. BLOCK DIAGRAM AND WORK PRINCIPLE 6

5. RECOMMENDED BOOSTER ANTENNA KITTING 8

5.1. RECOMMENDED DONOR/OUTDOOR ANTENNA 8
5.2. RECOMMENDED SERVICE/INDOOR ANTENNA 9

6. MAIN TECHNICAL SPECIFICATION 12

6.1. RF TECHNICAL SPECIFICATION 12
6.2. MECHANICAL SPECIFICATION 13
6.3. ENVIRONMENT CONDITIONS 13
6.4. REQUIREMENTS FOR ADAPTERS 13

7. INSTALLATION 14

7.1. INSTALLATION LOCATION REQUIREMENT 14
7.2. POWER REQUIREMENT 14
7.3. INSTALLATION TOOLS AND ACCESSORY 14
7.4. INSTALLATION OF DONOR ANTENNA 15
7.5. CABLE LAYOUT AND CONNECTOR ASSEMBLY 19
7.6. INDOOR ANTENNA INSTALLATION 20
7.7. REPEATER INSTALLATION 21
7.7.1. Installation Steps 21
7.7.2. Repeater's ports description 21
7.7.3. Accessories selection 21
7.8. REPEATER SETTINGS 21
7.8.1. Switch on power 21
7.8.2. Repeater Commissioning 23
7.9. SYSTEM TEST 25
7.9.1. Check whether the coverage is good 25
7.9.2. Repeater can not communicate in Power-ON status 26

8. FCC RF EXPOSURE STATEMENT 27

9. FCC WARNING 27

10. ISEDC WARNING 29

ISEDC Statement 29
ISEDC Radiation Exposure Statement: 29

Preface

This user's manual describes the installation, commissioning and maintenance of wide band consumer repeaters of LTE700+CDMA/GSM850+ PCS/GSM1900+AWS five systems.

Please do read user manual carefully before installing and maintaining the repeaters.

The information in this manual is subject to change without prior notice.

Opinions are welcomed about the manual improvement.

1. Safety Warnings

Users must follow the below principles：

- Repeater should follow system requirement of communication equipment, assure good grounding and lightning protection.
- The power supply voltage of repeater should meet the standards of security requirement; any operation shall be carried out only after cutting off power in advance. Only the professional is authorized for the operation.
- Do not dismantle machine, maintain or displace accessories by yourself, because in this way, the equipment may be damaged and you may even get an electric shock.
- Do not open the repeater, touch the module of repeater, or open the cover of module to touch the electronic component. The components will be damaged due to electrostatic.
- Please keep away from heating-equipment, because the repeater will dissipate heat during working. And do not cover booster with anything that influences heat-dissipation.

2. Introduction

Our SM-F13CPAL; SM-F10CPAL; SM-CW33CPAL; SM-C33CPALfull band repeater is the perfect solution for providing a wireless improvement in the cellular reception of a home, office, restaurant, VIP Room, apartment, building or shopping mall, in the quickest time possibly. One repeater covers 50 to 500 square meters.

In order to maintain safe and specific output signal levels, this repeater has built-in signal oscillation detection circuit to adjust the gain automatically so as to avoid interference to the cellular network, also it gets color changing LED's indicating its environmental status: the Alarm LED's located on the front of the unit will change color from green to orange or red, (depending on the input power level) when the system detects signal oscillation in the working band or the input signal is beyond a safe limit.

Our repeaters also feature a Network Safe / MUTE feature that automatically shuts off the repeater to protect the cellular network. Users shall make sure the LED's remain green at all times for optimum system performance.

Below diagram shows how simple and fast the repeater system is installed and works effectively:
One Yagi antenna, as donor antenna, is installed at the top of the roof to pick up good mobile phone signals from outside, and send through 5D-FB cable to repeater to amplify the signals significantly, then the output signals are sent to the indoor omni antennas and finally transmitted into the covering area. Very clear phone call or high speed mobile data are immediately achieved within the area.

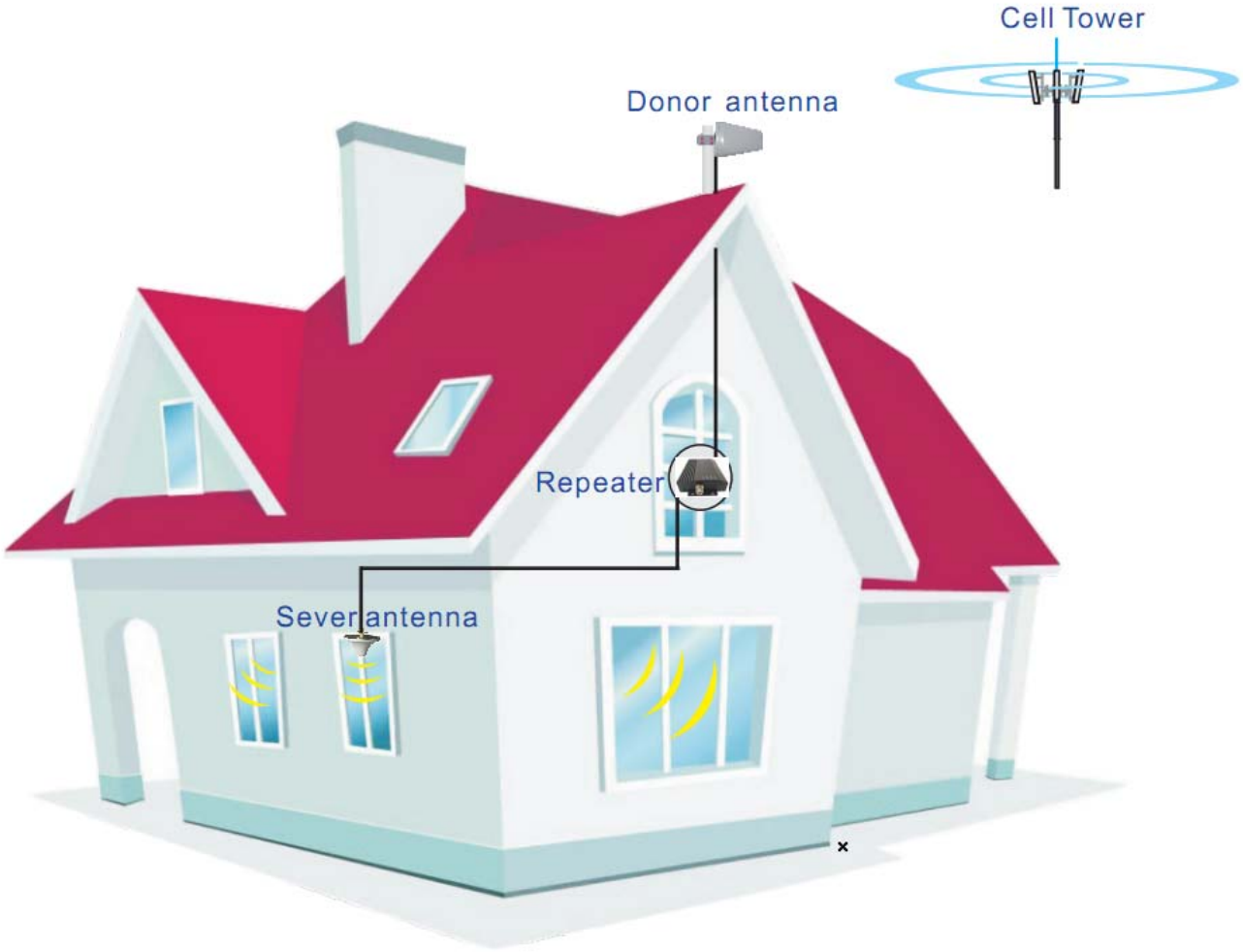

3. System Characteristics

3.1. Features

- Streamline shape.
- Wide band repeater to support signals of all operators.
- High-integration (One board to contain low-noise amplifier, frequency selection module, power amplifier

module, both uplink and downlink one for all).

- Auto automatic gain control to stabilize the coverage and minimize the noises.

3.2. Appearance of the repeaters

4. Block diagram and work principle

The repeater is basically a bi-directional amplifier, the downlink signals are received by the repeater from cell tower by the donor antenna, filtered by its internal duplexers and FC unit, amplified by low noise amplifier (LNA) and downlink PA unit, and then sent via the server antenna to the area to improve mobile signals for mobile phones.

The uplink signal of mobile devices from the coverage area is input via the server antenna, then filtered by duplexers and FC unit, amplified by the uplink low noise amplifier (LNA) and the uplink PA unit and finally sent via the donor antenna to the cell tower.

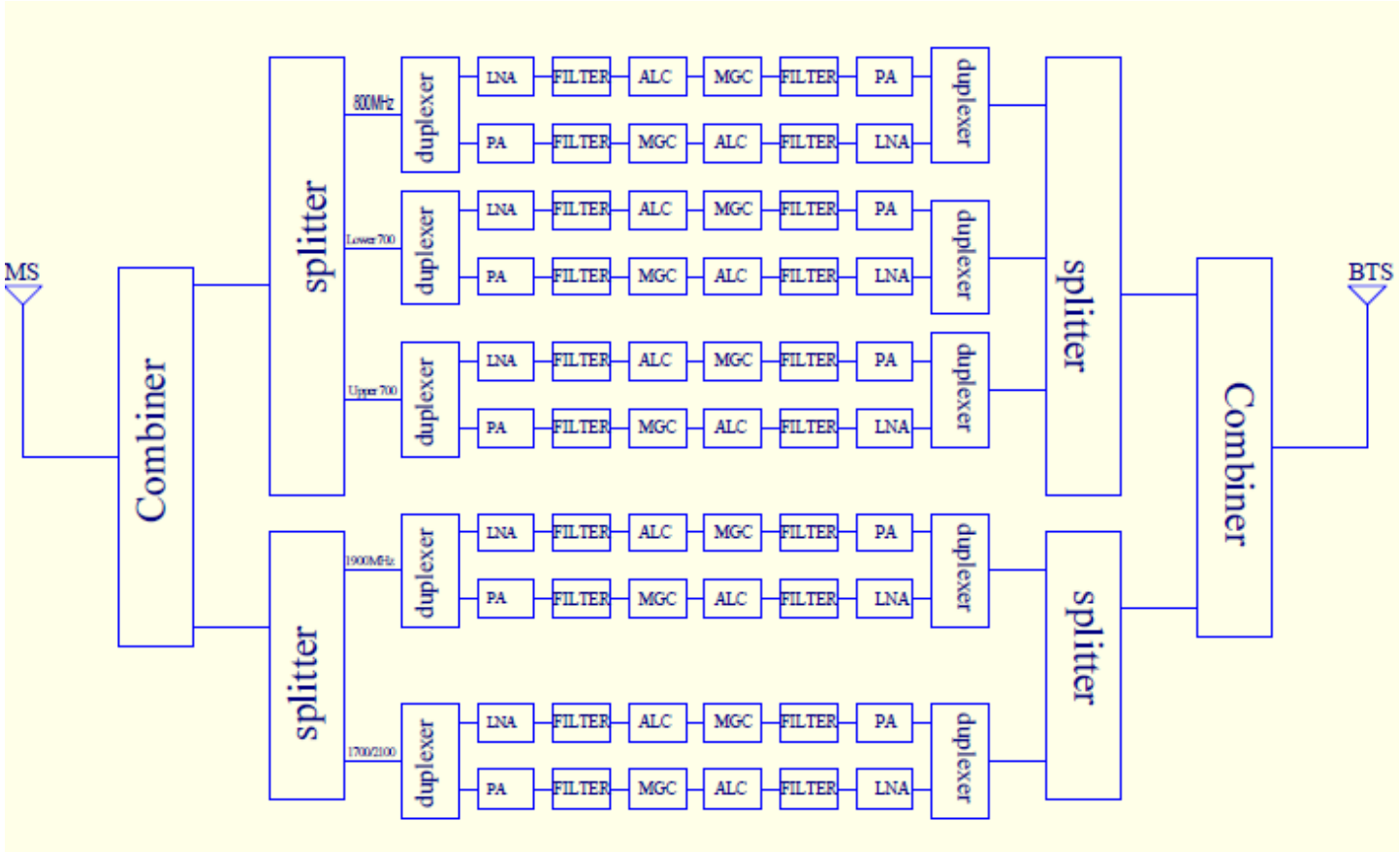
MS
Combiner
splitter
splitter
800MHz
Lower 700
Upper 700
1900MHz
1700/2100
duplexer
LNA
PA
FILTER
ALC
MGC
splitter
splitter
Combiner
BTS

5. Recommended booster antenna kitting

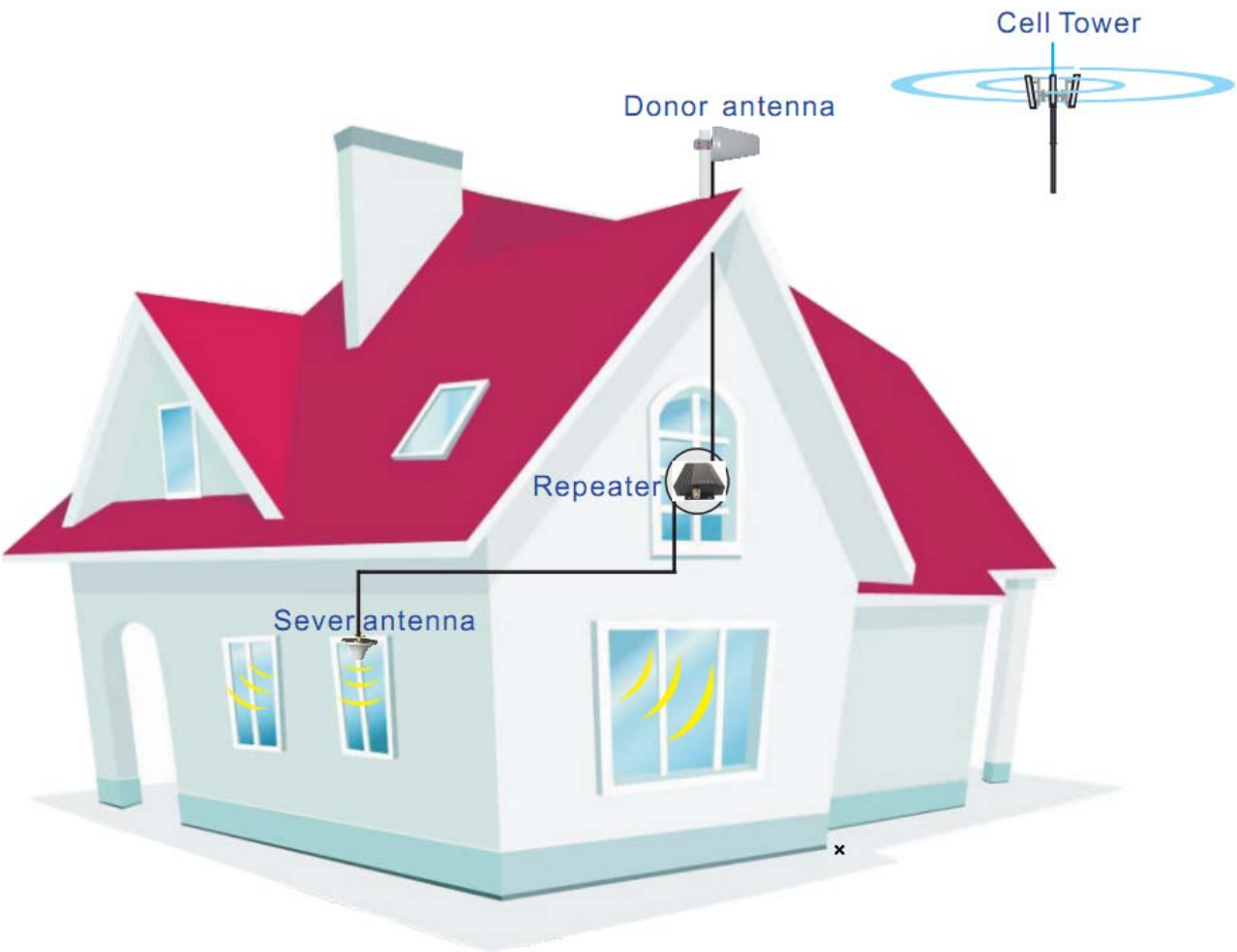

5.1. Recommended donor/outdoor antenna

Function: Pick up donor signals from the cell tower and send to the repeater by cable; the power level and quality of the received signals influence a lot on the coverage effect. Donor antenna also transmits the uplink signals from the repeater to cell tower.

Log Periodic Antenna

This is a wideband directional antenna with high gain. It's usually installed in the roof of the house and face to the BTS tower for better signal reception.

The outdoor panel Antenna

The outdoor panel antenna is also a directional antenna with 120 degree coverage. It's the wide range type that could pick up the signal from multi carriers. This antenna should be installed in a vertical position and face to the BTS tower for better reception.

5.2. Recommended service/indoor antenna

Omni antenna (Indoor ceiling Omni antenna or whip antenna), suitable to be installed in the center and radiate all direction; It is better to use a directional panel antenna or wide band Yagi when the coverage shape is long and narrow (corridors, long row of houses in two sides, tunnels or elevators or rural open space)

The indoor panel Antenna

The indoor panel antenna is also a directional antenna with 120 degree coverage. It's the wide range type that could pick up the signal from multi carriers. This antenna is usually installed in the wall or ceiling with the front panel facing to the covering area.

Omni Ceiling Antenna

The omni ceiling antenna is an omni directional antenna with a radiation of 360 degree. It's usually installed in the central of the covering area to distribute the signal around.

5.3. Optional booster kitting for fixed installation

5.3.1. Authorized kitting Options

Outdoor Antenna	Outdoor Antenna Gain				
	Lower 700MHz Band	**Upper 700MHz Band**	**Cellular Band**	**PCS Band**	**AWS Band**
Log Periodic Antenna	9.5	9.5	9.5	10	10
Panel antenna	7	7	7	9	9
Outdoor Cable					
Outdoor cable	**Outdoor Cable Loss**				
	Lower 700MHz Band	**Upper 700MHz Band**	**Cellular Band**	**PCS Band**	**AWS Band**
10m 5D-FB	1.7	1.7	1.7	2.7	2.7
Indoor Antenna					
Indoor Antenna	**Indoor Antenna Gain**				
	Lower 700MHz Band	**Upper 700MHz Band**	**Cellular Band**	**PCS Band**	**AWS Band**
Omni Antenna	3	3	3	3	3
Panel Antenna	7	7	7	9	9
Indoor Cable					
Indoor Cable	**Indoor Cable Loss**				
	Lower 700MHz Band	**Upper 700MHz Band**	**Cellular Band**	**PCS Band**	**AWS Band**
5m 5D-FB	0.8	0.8	0.8	1.4	1.4

5.3.2. Default combination:

Log Periodic Antenna+10m 5D-FB cable+ Panel Antenna+5m 5D-FB cable

5.3.3. Splitters or couplers:

when the building structure is too complicated or there is big loss due to thick walls, etc., splitters or couplers shall be used so that more antennas can be installed in more areas to distribute the signals to each corner of the coverage area.

5.3.4. Warning:

Unauthorized antennas, cables and / or coupling devices are prohibited by FCC rules. Please contact FCC for details:1-888-CALL-FF
The antenna, cable, and other accessories of the booster kits shall not be modified without the approval of the FOSHAN HONGXUN company, others it shall be deemed invalid.

A subscriber must have the consent of a wireless provider to operate a Consumer Signal Booster. Subscribers may obtain provider consent in a variety of ways. For example, AT&T, Sprint, T–Mobile, and Verizon Wireless have voluntarily committed to allow their subscribers to use properly certificated Consumer Signal Boosters (i.e., boosters that meet the new rules) on their networks. Also, a signal booster manufacturer could seek authorization for use of a particular booster model on behalf of all subscribers of individual providers. Alternatively, a provider may specify a testing protocol that if satisfied would result in licensee consent to specific booster models. A subscriber may also seek a licensee's express consent to operate a signal booster, e.g., by phone call or e-mail.
The following selected information about wireless providers' Consumer Booster registration mechanisms supplements the requirements and information given in Sections 20.21, 22.9, 24.9, 27.9, and the FCC Signal Boosters website (http://wireless.fcc.gov/signal-boosters/).

Sprint Nextel will allow consumers to register their signal boosters by calling their toll-free number. They have already trained their calling center and have designated an engineer to handle inquiries. They may eventually allow consumers to register on their website but they want to gauge how the process works via phone first.

T-Mobile online registration link: (www.T-Mobile.com/BoosterRegistration); (https://saqat.t-mobile.com/sites/SignalBooster#).

Verizon's online registration link: (http://www.verizonwireless.com/wcms/consumer/register-signal-booster.html). AT&T will allow online registration and will inform OET Lab with the weblink when it is ready.
U.S.Cellular (http://www.uscellular.com/uscellular/support/fcc-booster-registration.jsp).

6. Main technical specification

6.1. RF technical specification

Electrical specification		**Uplink**	**Downlink**
Frequency Range	LTE(A&B) (Lower 700M)	698~ 716 MHz	728 ~746 MHz
	LTE(C) (Upper 700M)	For FCC:776~ 787MHz For IC:777-787MHz	For FCC:746 ~757 MHz For IC:746-756MHz
	CDMA	824~849 MHz	869~894MHz
	PCS	1850 ~ 1915 MHz	1930 ~ 1995MHz
	AWS	1710~ 1755 MHz	2110 ~ 2155 MHz
Max .Gain		≤58dB	≤57dB
Max .Output Power		≤20dBm	≤8.5dBm
Band width		Wide Band	
Automatic Level Control		≥ 31dB	
Intermodulation Products	9KHz~1GHz	≤ -19dBm	≤-19dBm
	1GHz~12.75GHz	≤ -19dBm	≤ -19dBm
Spurious Emission	9KHz~1GHz	≤ -36dBm	
	1GHz~12.75GHz	≤ -30dBm	
Gain Flatness		CDMA&LTE&AWS≤ 8dB;PCS≤12dB	
Noise Figure		≤9dB	
VSWR		≤3	
Group Delay		≤ 1.0μs	
Frequency stability		≤ 0.01ppm	
LED Alarm		**Standard**	
Power LED		Power Indicator	
Smart Function		Downlink linkage the Uplink (When ALC is working, the downlink adjust several dB, the uplink will adjust the same.) But Uplink doesn't linkage the Downlink.	

6.2. Mechanical specification

SN	Item	specification
1	Environment Conditions	IP40
2	Cooling mode	Nature cooling

6.3. Environment Conditions

SN	Item	specification
1	Operating Temperature	-25°C to +55°C
2	Storage Temperature	-40°C to +80°C
3	Humidity	5% to 85%

6.4. Requirements for adapters

SN	Item	Minimum	Typical value	Maximum
1	Input Voltage Range	100 V	120 V	240 V
2	Output Voltage Range	47 Hz	60Hz	63 Hz

6.5. High level summary and/or brief description of safeguard features

- Anti-oscillation mechanism: There is the module to detect the oscillation signal when power on. If there is the oscillation detected, the device will shut down the links (uplink within 300ms, downlink within 1s) ; 1 minute later repeater will restart and detect the oscillation signal again, this process will repeat 5 time till the repeater is totally shut down. Please refer to the testing report in the FCC.

- AGC: If the input signal is detected to be too large, the MCU automatically control the transmission to reduce the gain of output signal to ensure that the output signal power level compliance with the factory setting. If the output signal of the amplifier is detected to be too large, the MCU automatically controls the input signal to ensure compliance with the factory setting.

- Noise-power limiting circuit: When there is no mobile phone signal in 5 minutes at the covering area, the device will shut down the uplink, so as to not to affect the BTS.

7. Installation

The repeaters should be used to cover the indoor area. Humidity and temperature of working environment can affect the reliability of repeater. So, temperature, humidity, dust, interference, power, space requirements and other factors should be considered during installation of repeater.

7.1. Installation Location Requirement

1) It is appreciated that the repeater is installed in a cool, dry and ventilated room without erosive gas and smoke and without leakage on its proof.
2) Or a cool and ventilated wall of which sun-proof and waterproof is expected.
3) Besides above, common wall, tower or high pole is Ok too.
4) Installation height should be easy for RF cable wiring, heat dissipation, security and maintenance.
5) Have a set of independent and stable power supply.
6) Have lightning conductor in the building, tower or high pole with enough strength or stability.

7.2. Power requirement

Generally it is AC power supply, and the requirement of AC is 100~240VAC / 47~63Hz

7.3. Installation tools and accessory

No.	Name	Specification	Quantity	Remark
1	Plastic Expansion Bolt	M5*24	6	Standard accessories
2	Tapping screw	M3*27	4	Standard accessories
3	Hanging folder		1	Standard accessories
4	reciprocating drill		1	Engineering-owned, punch the wall
5	Shot bit	M3	1	Engineering-owned, punch the wall

7.4. Installation of donor antenna

The repeater's main function is to improve weak RF signals of an area. A simple formula: Input power+ Gain= Output power. The signal strength from the outdoor antenna directly affects the efficiency of the indoor coverage. It is very important to choose the donor antenna location in order to get the best signals.

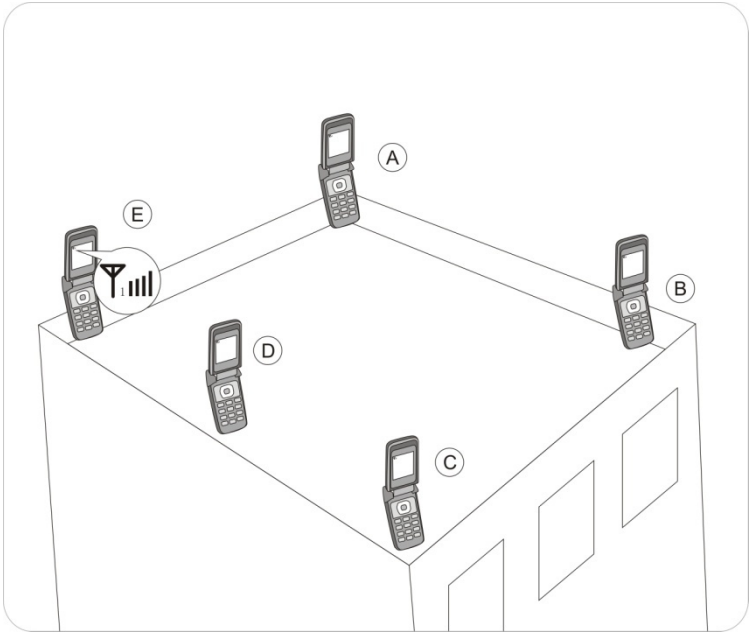

- Testing the signal strength received from donor antenna mounted in site by mobile phone:
  - Please select the top of building to install the donor antenna if total floors are less than 7 floors, and shall try your best to select places like balcony or platform lower than 7th floor for donor antenna if the buildings are over 7 floors, because the mobile signals are clean at less than 7th floor.
  - The mobile phone shall display full bar signals in location where the donor antenna is installed
  - The phone calls or data transmission shall be smooth and stable by 3 times testing in location where the donor antenna is to be installed
  - As shown from the above illustration, testing the signals from A to E, and select a best place that displays full bar signals to install the donor antenna.
- Selecting the installation direction of donor antenna.
  - The donor antenna shall point to the direction of the tower, and it would be much better to keep line of sight.
  - Please select the opposite directions for donor antenna and server antenna. If donor and server antennas have to be installed in the same direction, please install them only after the signal quality is tested and the self-oscillation is avoided. If the directional antenna is selected, the main directional angle should point to the tower antenna.
  - If the performance is poor due to weak signals or poor phone call quality, please adjust the direction of donor antenna or change its position in order to obtain the best calling effect.

- The wide band repeater supports all mobile operators or different mobile systems, so please adjust the donor antenna direction to have balance between signals of different mobile operators or various mobile systems.

■ Donor antenna installation ---Notes:

- Do not install the donor antenna during the rainy day with lightning.
- Please follow the instructions to install the donor antenna.
- It is a must that the waterproof shall be done to connectors of donor antenna and feeder lines.
- In order to avoid interference, please note that the donor antenna should be far away from the following objects of metal, high-voltage line, and RF antenna and high-voltage transformer.
- Repeater is a two-way signal amplifier. So proper isolation between donor antenna and server antenna is necessary in order to avoid self-oscillation. About the definition for self-oscillation, take MIC and loudspeaker for example; if it is too close for each other, it could make big noise. So the repeater can only run smoothly if alarm LED always remains GREEN color.

■ The minimum distance between donor antenna and server antenna shall be more than 10 meters; again the direction of donor and server antennas shall be opposite.

As shown in the below illustration, the booster amplifies the downlink signal **r** from the tower and send to the indoor antenna hereafter. If the distance between outdoor antenna and indoor antenna is less than the required distance, the amplified signal **R** will go back from indoor antenna to outdoor antenna. So it will lead to self-oscillation and reduce the coverage area, also the bad calling quality could happen at the same time, and the worse is that the mobile network could be influenced badly and the operators will finally come to shut off the repeater system.

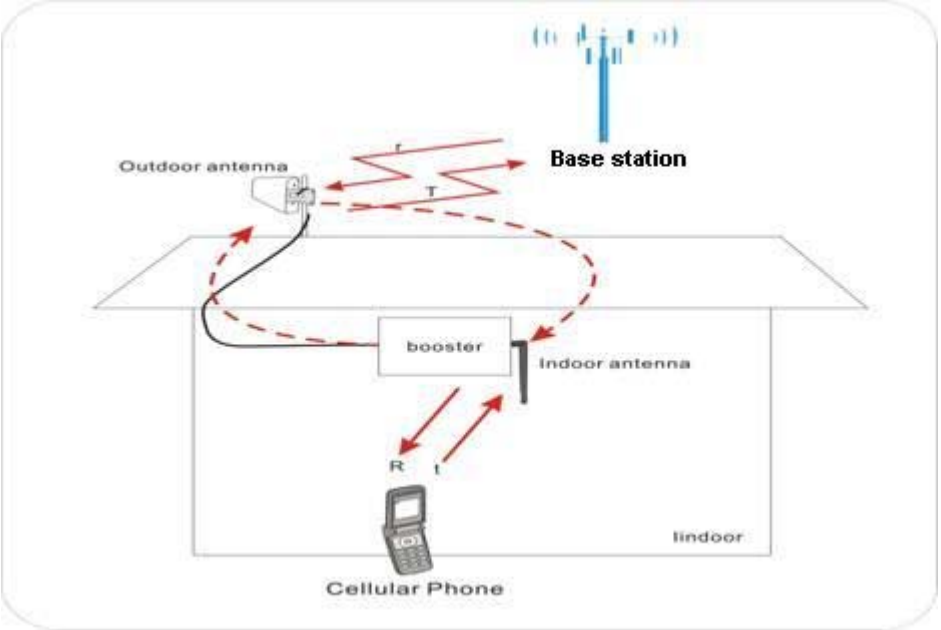

If isolation can't be achieved by the limited distance, the roof of the building or any other barriers can be used in between to increase isolation.

- Installation of panel antenna as donor antenna

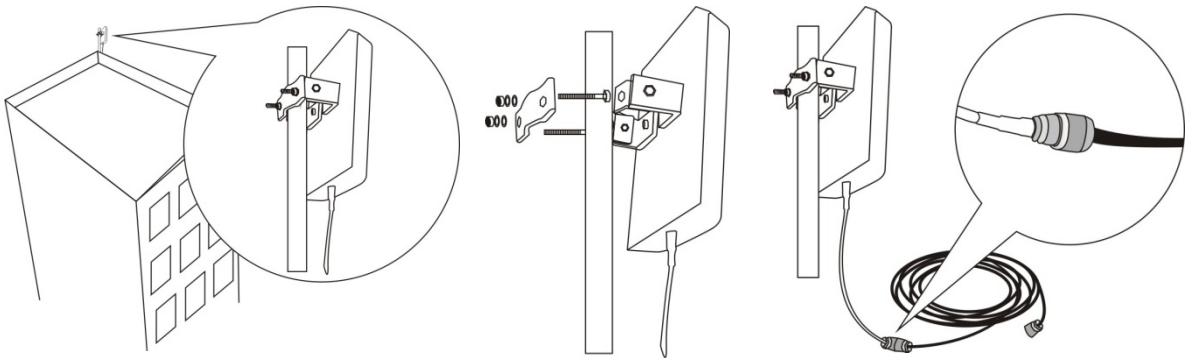

- Installation of wide directional antenna as donor antenna

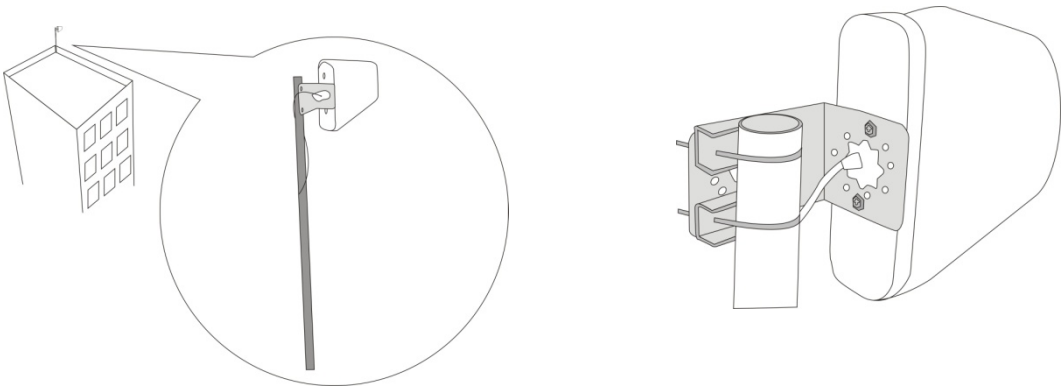

- Installation of YAGI antenna as donor antenna

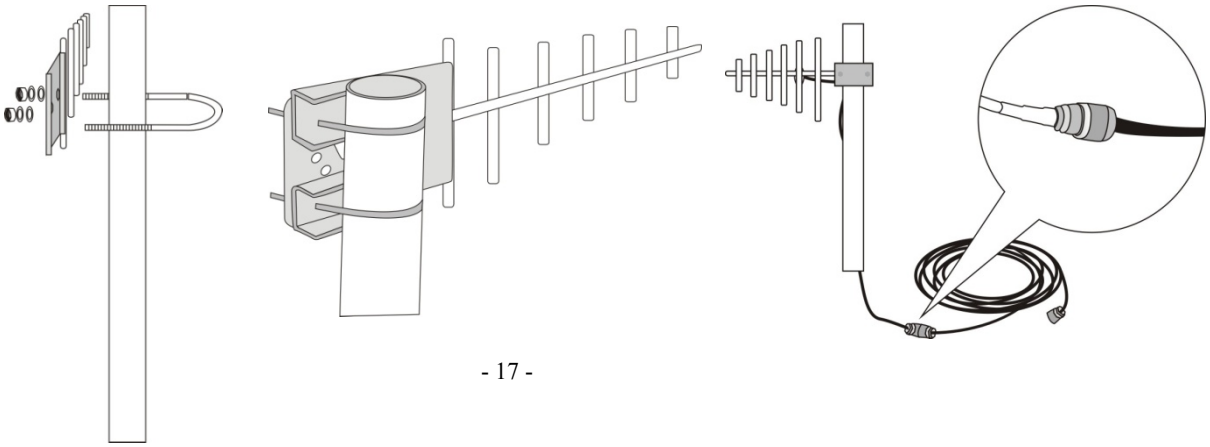

■ Test the call quality of donor antenna (for professional installation team only)

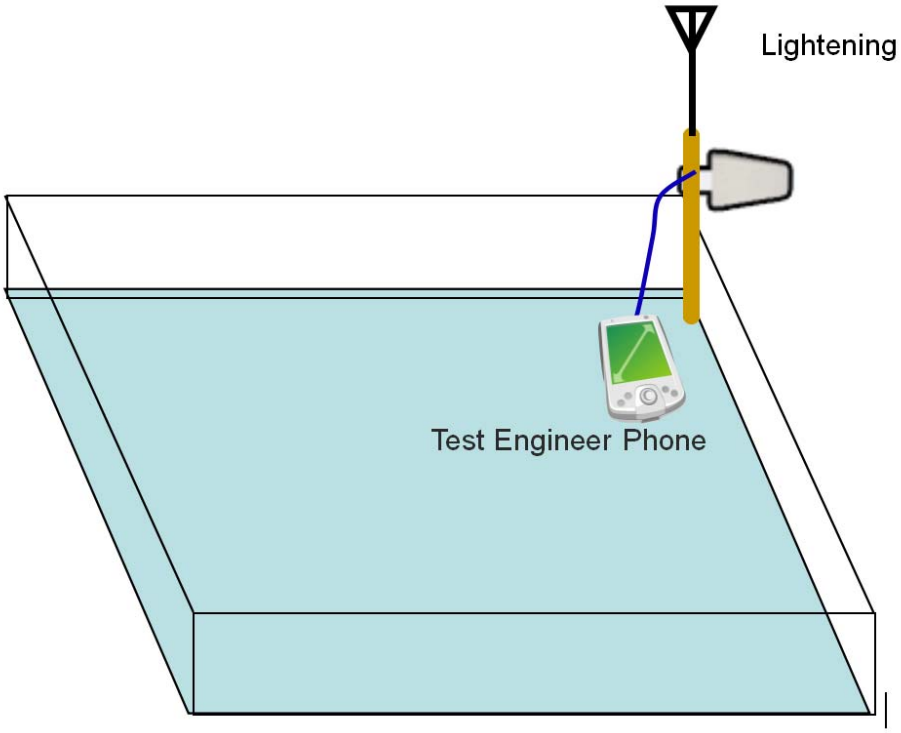

Fix the donor antenna after selecting the best position, and adjust slightly its height or angles in order to get the signals with suitable input power level and calling quality.

- **System Requirement of GSM or PCS**
  1) The total input power level shall be around -50dBm, lowest shall be more than –80dBm
  2) Test by mobile phone or data card by 3~5 times to make sure the calling quality is good at 95% of the time, and no handovers.
  3) It is requested that the leading BCCH shall be 6dB higher than the second BCCH in order to avoid call drops (for professional engineering reference only).

- **System Requirement of CDMA or AWS**
  1) The input power level shall be around -55 ~ -60dBm (it is less than GSM or DCS because of breathing effect), the lowest shall be more than –90dBm.
  2) Test by mobile phone or data card by 3~5 times to make sure that Ec/Io is more than –7dB, and no handovers.
  3) Ec/Io of adjacent carrier shall be 8dB less than that of donor carrier to avoid soft handover. The active PN shall be only 1.

7.5. Cable layout and connector assembly

1) Keep the type, specifications, routing direction, location, and curvature radius of cables in compliance with the design requirement. Place cables in good order, bend them smoothly, and protect the outer skin against any damage.
2) Bind cables in good order when laying them on cable racks. When leading cables in or out of troughs, use a hole-opener to open cable troughs and then install PVC lock-nuts to protect them.
3) Keep horizontal cables straight and fasten them stably with a fixing clip every 1 to 1.5 meters, with a proper stress.
4) Bind and fasten vertical cables every two to three meters to avoid damaging cables or connectors owing to their own heavy weight. Take back the cables and re-lay them when you have difficulty in pulling them, and avoid using a strong force to pull them.
5) Separate RF cables from power cables. Take proper isolation measures if they have to be placed on the same cable racks owing to the site condition restriction.
6) Correctly fasten all connection parts of the whole system, from the antenna to active interfaces to passive interfaces, and keep electrical interfaces well contacted. Give waterproof treatment to outdoor connection parts.
7) Take lightning protection measures for the antenna and feeder system in accordance with the design requirement. Avoid deforming the antenna feeder where grounding clips are placed, and give waterproof treatment to the feeder.
8) Keep exposed indoor cables in good order. Install PVC troughs or tubes if the exposed cables are more than 1 meter long. Place small passive RF parts such as power splitter in cable troughs.
9) Process both ends of RF coaxial cables as follows:
   - ✧ Keep the same redundant cable length and keep the length of stripped cables to agree with the corresponding connectors.
   - ✧ Use a proper force to cut the jacket layer or insulation layer and avoid damaging the braid shielded net and cores.
   - ✧ Weld cores firmly and smoothly with a proper amount of solder, without solder projections or nodules. Assemble coaxial cables strictly in accordance with the installation specifications.
   - ✧ Keep a moderate length of heat-shrinkable tubes and heat-shrink the tubes evenly when adding heat-shrinkable tubes to the end of cables.
   - ✧ Protect the ends of cables against water and dampness. Use waterproof tape to give waterproof treatment to exposed cable ends. Cut off the end if it is dampened or water-soaked.

7.6. Indoor antenna installation

Proper antennas shall be selected according to the site conditions and the requirement. And more than one antenna can be used with the repeater, especially for repeaters equal with or over 20dBm, and 30dBm can be connected with up to 10 antennas in order to send the signals to larger areas or distribute the signals equally. Please consult our professional engineers about the solution if you want to connect more than one antenna.

1) Omni antenna (Indoor ceiling omni antenna or whip antenna), is suitable to be installed in the center and radiate all directions.

2) It is better to use a directional panel antenna or Yagi when the coverage shape is long and narrow (corridors, long row of houses in two sides, tunnels or elevators or rural open space).

7.7. Repeater Installation

7.7.1. Installation Steps

10dBm~30dBm shall be installed in indoor areas only

1) Connect the power supply and the cables properly to the repeater ports.
2) Check again to make sure the repeater is installed firmly and repeater alarm LED must stay green.

7.7.2. Repeater's ports description

1) Outdoor port: connected with the donor antenna by cable.
2) Indoor port: connected with server antenna directly or by cable.
3) DC IN: connected with power supply.

7.7.3. Accessories selection

Please pay attention to the two points of "frequency" and "impedance" during the selection of the accessories. All accessories shall support the repeater's frequencies from feeder line, antenna and splitter to combiners etc. For example, the repeater's frequency is GSM900, so all the accessories must support the GSM900 frequency. And the repeater's impedance is 50ohm, so the accessories shall all be 50ohm. To use any other impedance of coax will put an extra load on your repeater, shorten its life span and decrease the system performance.

7.8. Repeater Settings

Please check very carefully all cable connections are correct and firm before running operation test and then carry out following tests.

7.8.1. Switch on power

After power is on, check first the POWER and ALARM LEDs.

- Status and definition of POWER indicator:

Status	Definition
Green	Normal
Off	DC power problem

- Status and Definition of ALARM indicator:

Status	ALARM
Green	It is working in linearity
	Note: Input signals may be not enough, please refer to the figures shown in the device. Do not do anything if it is good; otherwise please adjust the repeater system to get better source signal.
Green Flickering	It is working with slight oscillation.
	AGC activate 1~10dB.
Orange Flickering	It is working with medium oscillation.
	AGC activate 11~20dB.
Red Flickering	It is working with deep oscillation.
	AGC activate 21~30dB, and it will shut off after 5 seconds of Red.

Remark: Please note that Alarm LED works on repeater downlink signals only. I.E. the repeater input signals from CELL TOWER.

Single system repeater only has one set of power and alarm LEDs, while dual system have two sets of power and alarm LEDs, and three system repeaters have three sets of LEDs. Each system has own relevant LED and please refer to the correct LED for system performance evaluation.

Then repeater with plastic closet is designed with LEDs of “Alarm LOW” and “Alarm HIGH”. When it is used for single system of CDMA800, GSM850 and GSM900, only “Alarm Low” LED works, and “Alarm HIGH” LED is no use; when it is used for single system of DCS, PCS, CDMA1900, WCDMA or AWS, “Alarm HIGH” LED works, and “Alarm LOW” LED is no use. When the repeater supports two systems, “Alarm Low” and “Alarm HIGH” both work and support relevant low and high frequencies

7.8.2. Repeater Commissioning

- **The curve about device working status**

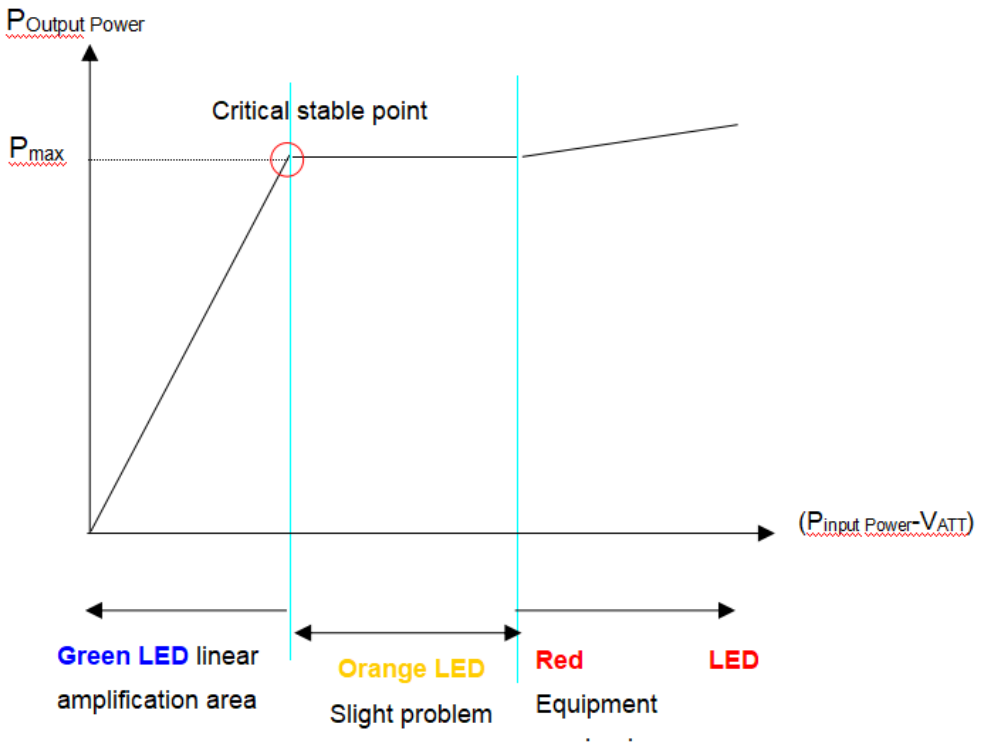

Output power, input signal and their attenuation curve

$P_{Output\ Power}$: Output Power

$P_{input\ Power}$: Input Power

V_{ATT}: Attenuation value of attenuator

$P_{input\ Power}$ -V_{ATT}: Input Power—Attenuation value of attenuator

P_{max}: Rate output power

- **Downlink gain setting**

First the alarm LED only indicates the downlink input power level, here we use color of Alarm LED to adjust the gain of the repeater. Alarm LED color must remain green. As for the downlink working

performance, it is a good working point that Alarm LED maintains “Green” color with the intention of turning orange; here we refer as “edge point”. At this time, downlink output power and coverage effect are stable.

And the equipment must be as far as possible away from overloading status of “red” (the equipment would hold higher interference and depression ability at this stage). So we shall try our best to set the equipment near “edge point” of green and intention of turning orange during engineering.

- **Setting of “edge point”:**

Switch on the power supply after connection with donor antenna and server antenna, and observe ALARM LED.

- If it shines “orange”, use 1dB as step to reduce the gain until “green” turns on, then increase the gain 1~3dB attenuation value until “orange” starts to turn on, then brings back 1~2dB till “green” is on, then fix the gain and the repeater’s downlink output power reaches the perfect status.
- If it shines “green” then.
  - Please check coverage effect firstly, if the coverage effect is good, the engineering has reached expecting target, thus there is no need to do anything.
  - To check whether the attenuation value has been set, if it is, use 1dB as step to increase gain until the “orange” turns on, then brings back 1~2dB till “green” is on again , then the repeater’s downlink output power reaches the perfect status.
  - But if attenuation has not been set, it indicates that the input power is not strong enough to let the repeater reach its good coverage.

  If the coverage effect is not good, the donor antenna should be adjusted to get stronger input signal. It is recommended that one person shall check the coverage effect inside the building when the other person is trying to adjust the antenna or the repeater. At this stage, please make sure “Orange” color will not be generated by self oscillation. Please take off the server antenna to check if it is self oscillation or not: if the Orange turns to be green, it is self oscillation; if it stays as Orange, it is not self oscillation. Please follow steps in other page to turn Orange to be Green.

- **Uplink gain setting**

Standard: uplink attenuation values =downlink attenuation values

Remark: Avoid putting more than a 5dB difference between the Uplink and Downlink. And Uplink gain must be equal to or less than DL gain, it can’t be more in order to avoid interference with mobile network.

7.9. System Test

7.9.1. Check whether the coverage is good

1) Have a test with mobile phone or data card (engineering mobile phone is preferred). If the signals in most areas have not been improved, please check below again:
   - ◆ The weak input signal leads to the low output power. Change the direction of donor antenna or its installation position or replace donor antenna with higher gain antenna to increase input signal power level.
   - ◆ Check whether it is necessary to add more server antennas since barriers block the signal penetration, also check whether the repeater's power is enough; please install more server antennas or replace with a repeater of higher power level.
2) If the signals in small part of the areas have not been improved, please check below:
   - ◆ Check whether the service antenna is installed correctly or not, you may try to move the antenna location to improve coverage.
   - ◆ Check if it is necessary to adjust the direction of the sever antenna.
   - ◆ Check whether it is necessary to add one or more antenna to enhance the coverage of special areas.

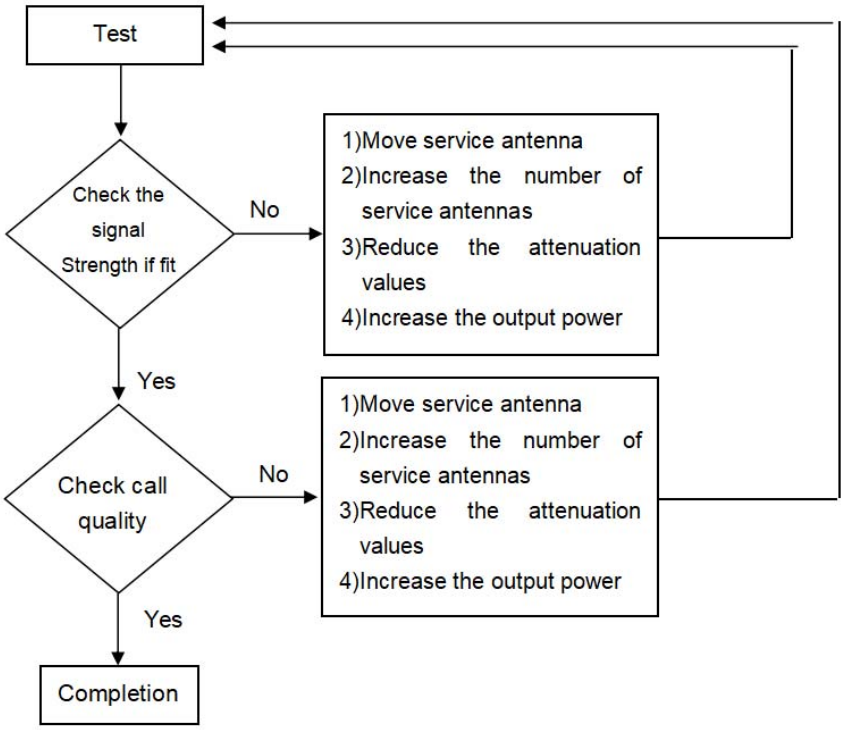

- Remark:
  - **Reduce the attenuation values***---at the same time must ensure the isolation.
  - **Increase the output power*** ---recommended ways: adjust the donor antenna direction / location, or replace with higher gain antenna to increase input signal strength.

7.9.2. Repeater can not communicate in Power-ON status

1) The power is on but it has a signal fluctuation or a flash signal. The phone call can not be achieved.

   It shall be caused by the insufficient isolation between donor antenna and serve antenna.

   Please take below measures:

   - Firstly check whether the alarm LED is orange. The orange light shows the insufficient isolation.
   - Secondly adjust the antennas' directions or locations or enlarge the distance between them.
   - Thirdly reduce the repeater's gain by ATT DIP if the above methods don't work.

   The following measures can also be tried:

   - Use the roof of the building to enlarge the isolation (Please try to place the donor antenna and server antenna in different floors).
   - Use some obstacles (Such as wall).

2) The repeater's power is on but the phone is not connected into the network and still can not communicate.

   - **Reason 1:** There are loose or wrong connections in the repeater system.
     - **Solution:** Please try to fasten the connections between the different parts of the system.
   - **Reason 2:** The signals received by donor antenna of other operators nearby are too strong. (For example, the other operators' signals are 10 dB stronger than the needed signals.)
     - **Solution 1:** Change the direction of donor antenna or its installation position, so that the gap of signal strength is reduced between operators.
     - **Solution 2:** Use barriers (like buildings) to block signals of other operators.

3) The repeater has alarm OFF status

   - **Reason:** the repeater breaks down.
     - **Solution:** Please check the power adaptor to see if it breaks down or not, then take off the plug and re-plug in, if alarm LED maintains off, the repeater break down is confirmed, then please consult local dealers for warranty.
   - **Reason 2:** There is self oscillation if alarm LED turns red after re-plugging in.
     - **Solution 1:** Change the direction or location of donor or server antennas to enlarge the distance.
     - **Solution 2:** Use barriers (like buildings) to increase isolation.
     - **Solution 3:** Reduce the repeater gain by DIP switch.

8. FCC RF Exposure Statement

This equipment complies with FCC radiation exposure limits set forth for an uncontrolled environment. End users must follow the specific operating instruction for satisfying RF exposure compliance. This transmitter must not be co-located or operating in conjunction with any other antenna or transmitter.

9. FCC Warning

This device complies with part 15 of the FCC Rules. Operation is subject to the following two conditions:

(1) This device may not cause harmful interference, and (2) this device must accept any interference received, including interference that may cause undesired operation.

Any Changes or modifications not expressly approved by the party responsible for compliance could void the user's authority to operate the equipment.

This is a CONSUMER device.

BEFORE USE, you **MUST REGISTER THIS DEVICE** with your wireless provider and have your provider's consent. Most wireless providers consent to the use of signal boosters. Some providers may not consent to the use of this device on their network. If you are unsure, contact your provider.
You **MUST** operate this device with approved antenna and cables as specified by the manufacturer. Antennas **MUST** be installed at least 20cm (8 inches) from any person.
You **MUST** cease operating this device immediately if requested by the FCC or a licensed wireless service provider.
WARNING. E911 location information may not be provided or may be inaccurate for calls served by using the device.
This device may be operated **ONLY** in a fixed location for in-building use.

Warning: The Inside Antennas for fixed installations must have 1.5m(for Omni antenna) or 1m(for Panel antenna) of separation distance from all active users.
Warning: The Outdoor Antennas for fixed installations must be installed no higher than 10 meters above ground
Note: This equipment has been tested and found to comply with the limits for a Class B digital device, pursuant to part 15 of the FCC Rules. These limits are designed to provide reasonable protection against harmful interference in a residential installation. This equipment generates uses and can radiate radio frequency energy and, if not installed and used in accordance with the instructions, may cause harmful interference to radio communications. However, there is no guarantee that interference will not occur in a particular installation. If this equipment does cause harmful interference to radio or television reception, which can be determined by turning the equipment

off and on, the user is encouraged to try to correct the interference by one or more of the following measures:

—Reorient or relocate the receiving antenna.

—Increase the separation between the equipment and receiver.

—Connect the equipment into an outlet on a circuit different from that to which the receiver is connected.

—Consult the dealer or an experienced radio/TV technician for help.

10. ISEDC Warning

ISEDC Statement

This device complies with Innovation, Science and Economic Development Canada Compliance license-exempt RSS standard(s). Operation is subject to the following two conditions:

- This device may not cause harmful interference.
- This device must accept any interference received, including interference that may cause undesired operation.

Le présent appareil est conforme aux CNR d'Industrie Canada applicables aux appareils radio exempts de licence. L'exploitation est autorisée aux deux conditions suivantes: (1) l'appareil ne doit pas produire de brouillage, et (2) l'utilisateur de l'appareil doit accepter tout brouillage radioélectrique subi, même si le brouillage est susceptible d'en compromettre le fonctionnement

ISEDC Radiation Exposure Statement:

This equipment complies with ISEDC RF radiation exposure limits set forth for an uncontrolled environment.
This equipment should be installed and operated with minimum distance 20cm between the radiator & your body.

ISEDC exposition aux radiations:
ce matériel est conforme aux limites d'exposition aux rayonnements rf isedc énoncée dans un autre environnement.
ce matériel doit être installé et exploité avec distance minimale de 20 entre le radiateur et votre corps.

This is a CONSUMER device.
BEFORE USE, you **MUST** meet all requirements set out in CPC-2-1-05. You **MUST** operate this device with approved antennas and cables as specified by the manufacturer. Antennas **MUST NOT** be installed within 20 cm of any person. You **MUST** cease operating this device immediately if requested by the ISED or a licensed wireless service provider. **WARNING**. E911 location information may not be provided or may be inaccurate for calls served by using the device. This device may be operated **ONLY** in a fixed location for in-building use.

Note:The link of “CPC-2-1-05” is “http://www.ic.gc.ca/eic/site/smt-gst.nsf/eng/sf08942.html”