LED FLASH INSTRUCTIONS

Bluetooth Mode: Blue LED flashes rapidly (3 times per second)

Pairing: Blue LED flashes (3 times per second)

Bluetooth connected: Blue LED light ON

Playing: Bluetooth LED flash regularly (Once per second)

FM mode: Bluetooth LED flash regularly (Once per second)

Aux mode: Bluetooth LED flash regularly (Once per second)

Charging mode: Red LED ON

Lower power: Blue LED flashes two times followed by audible low power warning

JACK INSTRUCTION

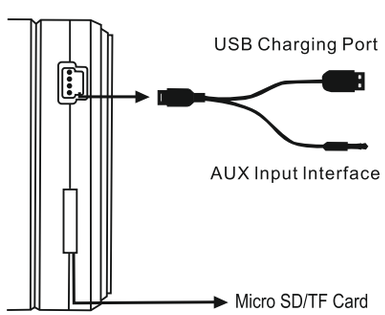

FEATURES AND SPECIFICATIONS

1. Built-in smart decoder to play MP3 files stored on micro SD cards
2. AUX input for connection to PC, smartphone and tablet devices
3. Bluetooth handsfree for wireless communication
4. Stereo Bluetooth supporting A2DP/AVRCP profiles for stereo sound
5. Battery capacity 320mAh
6. Speaker driver: 45mm
7. Speaker output: 3W
8. SPL: >95dB
9. Net weight: 230g

LIMITED WARRANTY

All Cocoon products have been subjected to a series of tests to ensure the highest level of dependability and compatibility. In the unlikely even that you experience a problem Cocoon warrants to the original consumer purchases of this product that it is free from defects in materials and workmanship for a period of 90 days from original purchase from an authorised retailer. In the event of manufacturing defect, Cocoon will at its sole discretion (1) repair the product free of charge using new or refurbished parts (2) exchange the product with a new or refurbished functional equivalent or (3) refund the original purchase price. This limited warranty does not cover normal wear and tear, and is voided in the event of non-compliance with this User Guide, or any changes, modifications, tampering or defects by any cause other than materials or workmanship. This limited warranty cannot be transferred. Proof of original purchases is required to verify eligibility in the event of a warranty claim. To obtain warranty service, please contact Customer Service at: contactus@cocoonelectronics.com

cocoon

All brands and logos are trademarks of their respective companies

Podium Electronics Limited, Unit 7, Provident Industrial Estate, Pump Lane, Hayes. UB3 3NE. United Kingdom

www.cocoonelectronics.com

cocoon

Cocoon BeatX

MINI WIRELESS SPEAKER

USER GUIDE

IMPORTANT NOTICE

Thank you for purchasing the Cocoon BeatX Mini Wireless Speaker. Please read this User Guide carefully before operation and save these instructions for future reference. For more Cocoon products visit www.cocoonelectronics.com.

Always keep your Cocoon product dry and do not expose it to extreme temperatures or humid conditions. Do not expose the product to fire.

If abused or misused the rechargeable batteries in your product may leak and in extreme cases may present a heat or fire hazard.

Use the product with care and store it in a clean, dust-free environment.

Use this product in accordance with the User Guide and in accordance with the operating conditions and limitations herein.

The metal surface of the product maybe subject to surface oxidation; this is not a fault.

Do not attempt to disassemble the product. In the event of fault do not attempt to repair the product. Warranty cover is voided in event of misuse or tampering by the user.

Podium Electronics Limited does not accept any liability for loss or damage arising from misuse of Podium or Cocoon products.

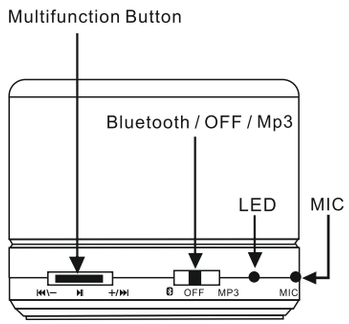

BLUETOOTH PAIRING INSTRUCTIONS

1. Press ON/OFF key to enter Bluetooth mode. The blue LED will flash quickly.
2. Follow the operating instructions of your Bluetooth device for pairing with other Bluetooth devices. Typically this is done by going to "Set Up", "Connect" or "Bluetooth" Menu and selecting the option to search Bluetooth devices.
3. The device should see "Cocoon BeatX". Select this for pairing.
4. If the connection is successful, the Blue LED light will come on and a voice command "Bluetooth device connected" will confirm.
5. If connection fails, please try again according to these instructions.

FUNCTIONS

+/>>| In SD/Bluetooth mode, short press – selects next track
In SD/Bluetooth mode, long press – increases volume
This button does not work in AUX mode.

|<<\- In SD/Bluetooth mode, short press – selects previous track
In SD/Bluetooth mode, long press – decreases volume
This button does not work in AUX mode.

>|| In SD card mode, short press – play/pause
In Bluetooth mode, short press – play/pause/answer/end/cancel dial/pair
In Bluetooth mode, double click – last number redial
In Bluetooth mode, long press (2 secs) – reject calls
In MP3 mode, long press cycles through AUX and SD card mode.

FCC Statement

This equipment has been tested and found to comply with the limits for a Class B digital device, pursuant to Part 15 of the FCC Rules. These limits are designed to provide reasonable protection against harmful interference in a residential installation. This equipment generates uses and can radiate radio frequency energy and, if not installed and used in accordance with the instructions, may cause harmful interference to radio communications. However, there is no guarantee that interference will not occur in a particular installation. If this equipment does cause harmful interference to radio or television reception, which can be determined by turning the equipment off and on, the user is encouraged to try to correct the interference by one or more of the following measures:

-- Reorient or relocate the receiving antenna.

-- Increase the separation between the equipment and receiver.

-- Connect the equipment into an outlet on a circuit different from that to which the receiver is connected.

-- Consult the dealer or an experienced radio/TV technician for help.

This device complies with part 15 of the FCC Rules. Operation is subject to the following two conditions:(1) This device may not cause harmful interference, and (2) this device must accept any interference received, including interference that may cause undesired operation.

Changes or modifications not expressly approved by the party responsible for compliance could void the user's authority to operate the equipment.