TEST REPORT

Product	:	Smart projector
Trade mark	:	TOUMEI
Model/Type reference	:	C900, C800, C800i, C800S, C800Pro, C900Pro, C1000, C1000Pro, C2000, C2000Pro, K1, K2, K3, K4, K5, K6, K7, K8, K9, K1Pro,K2Pro, K3Pro, K5Pro, K6Pro, K7Pro, K8Pro, K9Pro, S900, S1000, V3, V5, V6, V7, V8, V9, V3Pro, V5Pro, V6Pro, V7Pro, V8Pro, V9Pro, Q1, Q2, Q3, Q5, Q6, Q8, C1, C2, C3, C4, C5, C6, C7, C8, C9, T5, T6, T7, T8, T9, X1, X2, X3, X4, X5, X6, X7, X8, X9, S1, S2, S3, S4, S5, S6, S7, S8, S9, A3, A4, A5, A6, A7, A8, A9
Serial Number	:	N/A
Report Number	:	EED32N80001604
FCC ID	:	2AJCM-TMSERIES
Date of Issue	:	Mar. 09, 2021
Test Standards	:	47 CFR Part 15 Subpart E
Test result	:	PASS

Prepared for:

SHENZHEN TOUMEI TECHNOLOGY CO., LTD
Building 601, JinChongda Building, Building 00082, Shangwei Industrial Zone, Yukeng Trail Community, Guanhu Street, Longhua District, Shenzhen, China

Prepared by:

Centre Testing International Group Co., Ltd.
Hongwei Industrial Zone, Bao'an 70 District, Shenzhen, Guangdong, China
TEL: +86-755-3368 3668
FAX: +86-755-3368 3385

Compiled by:	Ken. cai Ken Cai	Reviewed by:	Aaron Ma Aaron Ma
Approved by:	David Wang David Wang	Date:	Mar. 09, 2021

Check No.:4710040121

1 Content

1 CONTENT 2
2 VERSION 3
3 TEST SUMMARY 4
4 GENERAL INFORMATION 5
4.1 CLIENT INFORMATION 5
4.2 GENERAL DESCRIPTION OF EUT 5
4.3 TEST CONFIGURATION 7
4.4 TEST ENVIRONMENT 7
4.5 DESCRIPTION OF SUPPORT UNITS 8
4.6 TEST LOCATION 8
4.7 DEVIATION FROM STANDARDS 8
4.8 ABNORMALITIES FROM STANDARD CONDITIONS 8
4.9 OTHER INFORMATION REQUESTED BY THE CUSTOMER 8
4.10 MEASUREMENT UNCERTAINTY (95% CONFIDENCE LEVELS, K=2) 8
5 EQUIPMENT LIST 9
6 RADIO TECHNICAL REQUIREMENTS SPECIFICATION 11
6.1 ANTENNA REQUIREMENT 11
6.2 AC POWER LINE CONDUCTED EMISSIONS 12
6.3 MAXIMUM CONDUCTED OUTPUT POWER 15
6.4 6DB EMISSION BANDWIDTH 16
6.5 26DB EMISSION BANDWIDTH AND 99% OCCUPIED BANDWIDTH 17
6.6 MAXIMUM POWER SPECTRAL DENSITY 18
6.7 FREQUENCY STABILITY 19
6.8 RADIATED EMISSION 20
6.9 RADIATED EMISSION WHICH FALL IN THE RESTRICTED BANDS 31
7 APPENDIX A 44
PHOTOGRAPHS OF TEST SETUP 45
PHOTOGRAPHS OF EUT CONSTRUCTIONAL DETAILS 48

2 Version

Version No.	Date	Description
00	Mar. 09, 2021	Original

3 Test Summary

Test Item	Test Requirement	Result
Antenna Requirement	47 CFR Part 15 Subpart C Section 15.203	PASS
AC Power Line Conducted Emission	47 CFR Part 15 Subpart E Section 15.407 (b)(6)	PASS
Duty Cycle	47 CFR Part 15 Subpart E Section 15.407	PASS
Maximum Conducted Output Power	47 CFR Part 15 Subpart E Section 15.407 (a)	PASS
26dB emission bandwidth	47 CFR Part 15 Subpart E Section 15.407 (a)	PASS
99% Occupied bandwidth	\	PASS
6dB emission bandwidth	47 CFR Part 15 Subpart E Section 15.407 (e)	PASS
Maximum Power Spectral Density	47 CFR Part 15 Subpart E Section 15.407 (a)	PASS
Frequency stability	47 CFR Part 15 Subpart E Section 15.407 (g)	PASS
Radiated Emissions	47 CFR Part 15 Subpart E Section 15.407 (b)	PASS
Radiated Emissions which fall in the restricted bands	47 CFR Part 15 Subpart E Section 15.407 (b)	PASS

Remark:

Company Name and Address shown on Report, the sample(s) and sample Information were provided by the applicant who should be responsible for the authenticity which CTI hasn't verified.

Model No.: C900, C800, C800i, C800S, C800Pro, C900Pro, C1000, C1000Pro, C2000, C2000Pro, K1, K2, K3, K4, K5, K6, K7, K8, K9, K1Pro, K2Pro, K3Pro, K5Pro, K6Pro, K7Pro, K8Pro, K9Pro, S900, S1000, V3, V5, V6, V7, V8, V9, V3Pro, V5Pro, V6Pro, V7Pro, V8Pro, V9Pro, Q1, Q2, Q3, Q5, Q6, Q8, C1, C2, C3, C4, C5, C6, C7, C8, C9, T5, T6, T7, T8, T9, X1, X2, X3, X4, X5, X6, X7, X8, X9, S1, S2, S3, S4, S5, S6, S7, S8, S9, A3, A4, A5, A6, A7, A8, A9

Only the model C900 was tested, since the electrical circuit design, layout, components used and internal wiring were identical for the above models, with difference being color of appearance, pack and model name.

4 General Information

4.1 Client Information

Applicant:	SHENZHEN TOUMEI TECHNOLOGY CO., LTD
Address of Applicant:	Building 601, JinChongda Building, Building 00082, Shangwei Industrial Zone, Yukeng Trail Community, Guanhu Street, Longhua District, Shenzhen, China
Manufacturer:	SHENZHEN TOUMEI TECHNOLOGY CO., LTD
Address of Manufacturer:	Building 601, JinChongda Building, Building 00082, Shangwei Industrial Zone, Yukeng Trail Community, Guanhu Street, Longhua District, Shenzhen, China
Factory:	SHENZHEN TOUMEI TECHNOLOGY CO., LTD
Address of Factory:	Building 601, JinChongda Building, Building 00082, Shangwei Industrial Zone, Yukeng Trail Community, Guanhu Street, Longhua District, Shenzhen, China

4.2 General Description of EUT

Product Name:	Smart projector	
Model No.:	C900	
Add Model No.:	C800, C800i, C800S, C800Pro, C900Pro, C1000, C1000Pro, C2000, C2000Pro, K1, K2, K3, K4, K5, K6, K7, K8, K9, K1Pro, K2Pro, K3Pro, K5Pro, K6Pro, K7Pro, K8Pro, K9Pro, S900, S1000, V3, V5, V6, V7, V8, V9, V3Pro, V5Pro, V6Pro, V7Pro, V8Pro, V9Pro, Q1, Q2, Q3, Q5, Q6, Q8, C1, C2, C3, C4, C5, C6, C7, C8, C9, T5, T6, T7, T8, T9, X1, X2, X3, X4, X5, X6, X7, X8, X9, S1, S2, S3, S4, S5, S6, S7, S8, S9, A3, A4, A5, A6, A7, A8, A9	
Trade mark:	TOUMEI	
Product Type:	☒ Mobile ☐ Portable ☐ Fix Location	
Type of Modulation:	IEEE 802.11a: OFDM (BPSK, QPSK, 16QAM, 64QAM) IEEE 802.11n(HT20/HT40): OFDM (BPSK, QPSK, 16QAM, 64QAM) IEEE 802.11ac(VHT20/VHT40/VHT80): OFDM (BPSK, QPSK, 16QAM, 64QAM, 256QAM)	
Operating Frequency	U-NII-1: 5180-5240MHz U-NII-3: 5745-5825MHz	
Antenna Type:	integral antenna	
Antenna Gain:	BT ANT: 3.5dBi; WIFI ANT1: 3.5dBi; WIFI ANT2: 3.5dBi	
Power Supply:	Adapter:	MODEL:TEKA-TD120200EU INPUT:100-240V~ 50/60Hz 0.7A max OUTPUT:12V⎓2.0A,24.0W
	Battery:	Model:18650-2S1P DC 7.4V, 2600mAh, 19.24Wh
Test voltage:	DC 12V	
Sample Received Date:	Jan. 07, 2021	
Sample tested Date:	Jan. 07, 2021 to Feb. 26, 2021	

Operation Frequency each of channel

802.11a/802.11n/802.11ac (20MHz) Frequency/Channel Operations:

U-NII-1		U-NII-3	
Channel	Frequency(MHz)	Channel	Frequency(MHz)
36	5180	149	5745
40	5200	153	5765
44	5220	157	5785
48	5240	161	5805
-	-	165	5825

802.11n/802.11ac (40MHz) Frequency/Channel Operations:

U-NII-1		U-NII-3	
Channel	Frequency(MHz)	Channel	Frequency(MHz)
38	5190	151	5755
46	5230	159	5795

802.11ac (80MHz) Frequency/Channel Operations:

U-NII-1		U-NII-3	
Channel	Frequency(MHz)	Channel	Frequency(MHz)
42	5210	155	5775

Note:

In section 15.31(m), regards to the operating frequency range over 10 MHz, the lowest frequency, the middle frequency, and the highest frequency of channel were selected to perform the test, and the selected channel see below:

4.3 Test Configuration

EUT Test Software Settings:		
Software:	Wi-Fi: QATool_Dbg.exe	
EUT Power Grade:	Default(manufacturer declare)	
Use test software to set the lowest frequency, the middle frequency and the highest frequency keep transmitting of the EUT.		
Test Mode:		
We have verified the construction and function in typical operation. All the test modes were carried out with the EUT in transmitting operation, which was shown in this test report and defined as follows:		
Per-scan all kind of data rate in lowest channel, and found the follow list which it was worst case.		
Mode	Data rate	
802.11a	6 Mbps	
802.11n(HT20)	MCS0	
802.11n(HT40)	MCS0	
802.11ac(VHT20)	MCS0	
802.11ac(VHT40)	MCS0	
802.11ac(VHT80)	MCS0	

4.4 Test Environment

Operating Environment:		
Radiated Spurious Emissions:		
Temperature:	22~25.0 °C	
Humidity:	50~55 % RH	
Atmospheric Pressure:	1010mbar	
Conducted Emissions:		
Temperature:	22~25.0 °C	
Humidity:	50~55 % RH	
Atmospheric Pressure:	1010mbar	
RF Conducted:		
Humidity:	50~55 % RH	
Atmospheric Pressure:	1010mbar	
Temperature:	NT (Normal Temperature)	22~25.0 °C
	LT (Low Temperature)	-10 °C
	HT (High Temperature)	75.0 °C
Working Voltage of the EUT:	NV (Normal Voltage)	12.0 V
	LV (Low Voltage)	10.8 V
	HV (High Voltage)	13.2 V

4.5 Description of Support Units

The EUT has been tested with associated equipment below.

Associated equipment name		Manufacture	model	S/N serial number	Supplied by	Certification
AE	Notebook	DELL	DELL 3490	D245DX2	DELL	CE&FCC

4.6 Test Location

All tests were performed at:

Centre Testing International Group Co., Ltd

Building C, Hongwei Industrial Park Block 70, Bao'an District, Shenzhen, China

Telephone: +86 (0) 755 33683668 Fax:+86 (0) 755 33683385

No tests were sub-contracted.

FCC Designation No.: CN1164

4.7 Deviation from Standards

None.

4.8 Abnormalities from Standard Conditions

None.

4.9 Other Information Requested by the Customer

None.

4.10 Measurement Uncertainty (95% confidence levels, k=2)

No.	Item	Measurement Uncertainty
1	Radio Frequency	7.9×10^{-8}
2	RF power, conducted	0.46dB (30MHz-1GHz)
		0.55dB (1GHz-18GHz)
3	Radiated Spurious emission test	3.3dB (9kHz-30MHz)
		4.5dB (30MHz-1GHz)
		4.8dB (1GHz-18GHz)
		3.4dB (18GHz-40GHz)
4	Conduction emission	3.5dB (9kHz to 150kHz)
		3.1dB (150kHz to 30MHz)
5	Temperature test	0.64°C
6	Humidity test	3.8%
7	DC power voltages	0.026%

5 Equipment List

Conducted disturbance Test					
Equipment	**Manufacturer**	**Model No.**	**Serial Number**	**Cal. date (mm-dd-yyyy)**	**Cal. Due date (mm-dd-yyyy)**
Receiver	R&S	ESCI	100435	04-28-2020	04-27-2021
Temperature/ Humidity Indicator	Defu	TH128	/	---	---
LISN	R&S	ENV216	100098	03-04-2021	03-03-2022
Barometer	changchun	DYM3	1188	---	---

RF test system					
Equipment	**Manufacturer**	**Mode No.**	**Serial Number**	**Cal. Date (mm-dd-yyyy)**	**Cal. Due date (mm-dd-yyyy)**
Spectrum Analyzer	Keysight	N9010A	MY54510339	12-28-2020	12-27-2021
Signal Generator	Keysight	N5182B	MY53051549	12-28-2020	12-27-2021
Temperature/ Humidity Indicator	biaozhi	HM10	1804186	12-28-2020	12-27-2021
High-pass filter	Sinoscite	FL3CX03WG18 NM12-0398-002	---	---	---
High-pass filter	MICRO-TRONICS	SPA-F-63029-4	---	---	---
DC Power	Keysight	E3642A	MY56376072	12-28-2020	12-27-2021
PC-1	Lenovo	R4960d	---	---	---
Power unit	R&S	OSP120	101374	12-28-2020	12-27-2021
RF control unit	JS Tonscend	JS0806-2	158060006	12-28-2020	12-27-2021
BT&WI-FI Automatic test software	JS Tonscend	JS1120-3	---	---	---

3M Semi/full-anechoic Chamber					
Equipment	**Manufacturer**	**Model No.**	**Serial Number**	**Cal. date (mm-dd-yyyy)**	**Cal. Due date (mm-dd-yyyy)**
3M Chamber & Accessory Equipment	TDK	SAC-3	---	05-24-2019	05-23-2022
TRILOG Broadband Antenna	Schwarzbeck	VULB9163	9163-618	05-16-2020	05-15-2021
Loop Antenna	Schwarzbeck	FMZB 1519B	1519B-076	04-25-2018	04-24-2021
Receiver	R&S	ESCI7	100938-003	10-16-2020	10-15-2021
Multi device Controller	maturo	NCD/070/10711 112	---	---	---
Temperature/ Humidity Indicator	Shanghai qixiang	HM10	1804298	06-29-2020	06-28-2021
Cable line	Fulai(7M)	SF106	5219/6A	---	---
Cable line	Fulai(6M)	SF106	5220/6A	---	---
Cable line	Fulai(3M)	SF106	5216/6A	---	---
Cable line	Fulai(3M)	SF106	5217/6A	---	---

3M full-anechoic Chamber					
Equipment	**Manufacturer**	**Model No.**	**Serial Number**	**Cal. date (mm-dd-yyyy)**	**Cal. Due date (mm-dd-yyyy)**
RSE Automatic test software	JS Tonscend	JS36-RSE	10166	---	---
Receiver	Keysight	N9038A	MY57290136	03-04-2021	03-03-2022
Spectrum Analyzer	Keysight	N9020B	MY57111112	03-04-2021	03-03-2022
Spectrum Analyzer	Keysight	N9030B	MY57140871	03-04-2021	03-03-2022
TRILOG Broadband Antenna	Schwarzbeck	VULB 9163	9163-1148	04-25-2018	04-24-2021
Horn Antenna	Schwarzbeck	BBHA 9170	9170-832	04-25-2018	04-24-2021
Horn Antenna	ETS-LINDGREN	3117	00057407	07-10-2018	07-09-2021
Preamplifier	EMCI	EMC184055SE	980596	05-20-2020	05-19-2021
Preamplifier	EMCI	EMC001330	980563	04-22-2020	04-21-2021
Preamplifier	JS Tonscend	980380	EMC051845 SE	12-31-2020	12-30-2021
Temperature/ Humidity Indicator	biaozhi	GM1360	EE1186631	04-27-2020	04-26-2021
Fully Anechoic Chamber	TDK	FAC-3	---	01-16-2021	01-15-2024
Filter bank	JS Tonscend	JS0806-F	188060094	04-10-2018	04-09-2021
Cable line	Times	SFT205-NMSM-2.50M	394812-0001	---	---
Cable line	Times	SFT205-NMSM-2.50M	394812-0002	---	---
Cable line	Times	SFT205-NMSM-2.50M	394812-0003	---	---
Cable line	Times	SFT205-NMSM-2.50M	393495-0001	---	---
Cable line	Times	EMC104-NMNM-1000	SN160710	---	---
Cable line	Times	SFT205-NMSM-3.00M	394813-0001	---	---
Cable line	Times	SFT205-NMNM-1.50M	381964-0001	---	---
Cable line	Times	SFT205-NMSM-7.00M	394815-0001	---	---
Cable line	Times	HF160-KMKM-3.00M	393493-0001	---	---

6 Radio Technical Requirements Specification

6.1 Antenna Requirement

Standard requirement:	47 CFR Part 15C Section 15.203
15.203 requirement: An intentional radiator shall be designed to ensure that no antenna other than that furnished by the responsible party shall be used with the device. The use of a permanently attached antenna or of an antenna that uses a unique coupling to the intentional radiator, the manufacturer may design the unit so that a broken antenna can be replaced by the user, but the use of a standard antenna jack or electrical connector is prohibited.	
EUT Antenna:	Please see Internal photos
The antenna is integral antenna. The best case gain of the antenna is 3.5 dBi.	

6.2 AC Power Line Conducted Emissions

Test Requirement:	47 CFR Part 15C Section 15.207
Test Method:	ANSI C63.10: 2013
Test Frequency Range:	150kHz to 30MHz
Receiver setup:	RBW=9 kHz, VBW=30 kHz, Sweep time=auto
Limit:	

Frequency range (MHz)	Limit (dBuV)	
	Quasi-peak	Average
0.15-0.5	66 to 56*	56 to 46*
0.5-5	56	46
5-30	60	50

* Decreases with the logarithm of the frequency.

Test Setup:

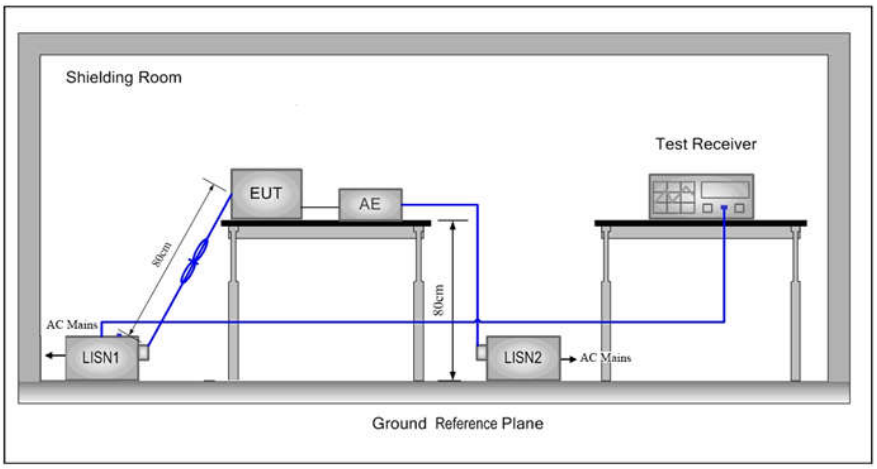

Test Procedure:

1) The mains terminal disturbance voltage test was conducted in a shielded room.
2) The EUT was connected to AC power source through a LISN 1 (Line Impedance Stabilization Network) which provides a 50Ω/50μH + 5Ω linear impedance. The power cables of all other units of the EUT were connected to a second LISN 2, which was bonded to the ground reference plane in the same way as the LISN 1 for the unit being measured. A multiple socket outlet strip was used to connect multiple power cables to a single LISN provided the rating of the LISN was not exceeded.
3) The tabletop EUT was placed upon a non-metallic table 0.8m above the ground reference plane. And for floor-standing arrangement, the EUT was placed on the horizontal ground reference plane.
4) The test was performed with a vertical ground reference plane. The rear of the EUT shall be 0.4 m from the vertical ground reference plane. The vertical ground reference plane was bonded to the horizontal ground reference plane. The LISN 1 was placed 0.8 m from the boundary of the unit under test and bonded to a ground reference plane for LISNs mounted on top of the ground reference plane. This distance was between the closest points of the LISN 1 and the EUT. All other units of the EUT and associated equipment was at least 0.8 m from the LISN 2.
5) In order to find the maximum emission, the relative positions of equipment and all of the interface cables must be changed according to ANSI C63.10: 2013 on conducted measurement.

Test Mode:	All modes were tested, only the worse case lowest channel of 6Mbps for 802.11a was recorded in the report.
Test Results:	Pass

Measurement Data

Live line:

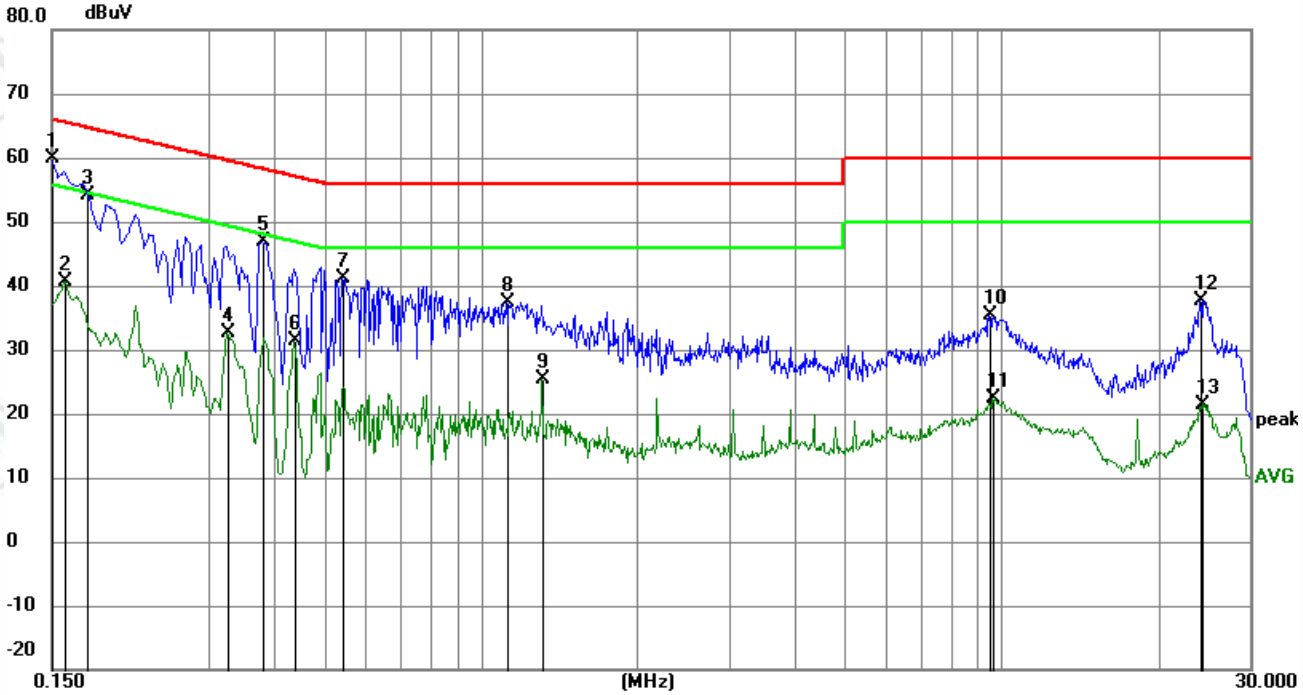

No.	Mk.	Freq.	Reading Level	Correct Factor	Measure-ment	Limit	Margin		
		MHz	dBuV	dB	dBuV	dBuV	dB	Detector	Comment
1	*	0.1500	50.00	9.87	59.87	66.00	-6.13	peak	
2		0.1590	30.67	9.87	40.54	55.52	-14.98	AVG	
3		0.1758	44.36	9.87	54.23	64.68	-10.45	peak	
4		0.3255	22.51	10.04	32.55	49.57	-17.02	AVG	
5		0.3795	36.78	9.99	46.77	58.29	-11.52	peak	
6		0.4380	21.31	9.96	31.27	47.10	-15.83	AVG	
7		0.5415	31.13	10.00	41.13	56.00	-14.87	peak	
8		1.1174	27.64	9.83	37.47	56.00	-18.53	peak	
9		1.3110	15.48	9.82	25.30	46.00	-20.70	AVG	
10		9.4650	25.56	9.78	35.34	60.00	-24.66	peak	
11		9.6270	12.72	9.78	22.50	50.00	-27.50	AVG	
12		24.1305	27.58	9.99	37.57	60.00	-22.43	peak	
13		24.2835	11.50	10.00	21.50	50.00	-28.50	AVG	

Remark:

1. The following Quasi-Peak and Average measurements were performed on the EUT:
2. Final Test Level =Receiver Reading + LISN Factor + Cable Loss.
3. If the Peak value under Average limit, the Average value is not recorded in the report.

Neutral line:

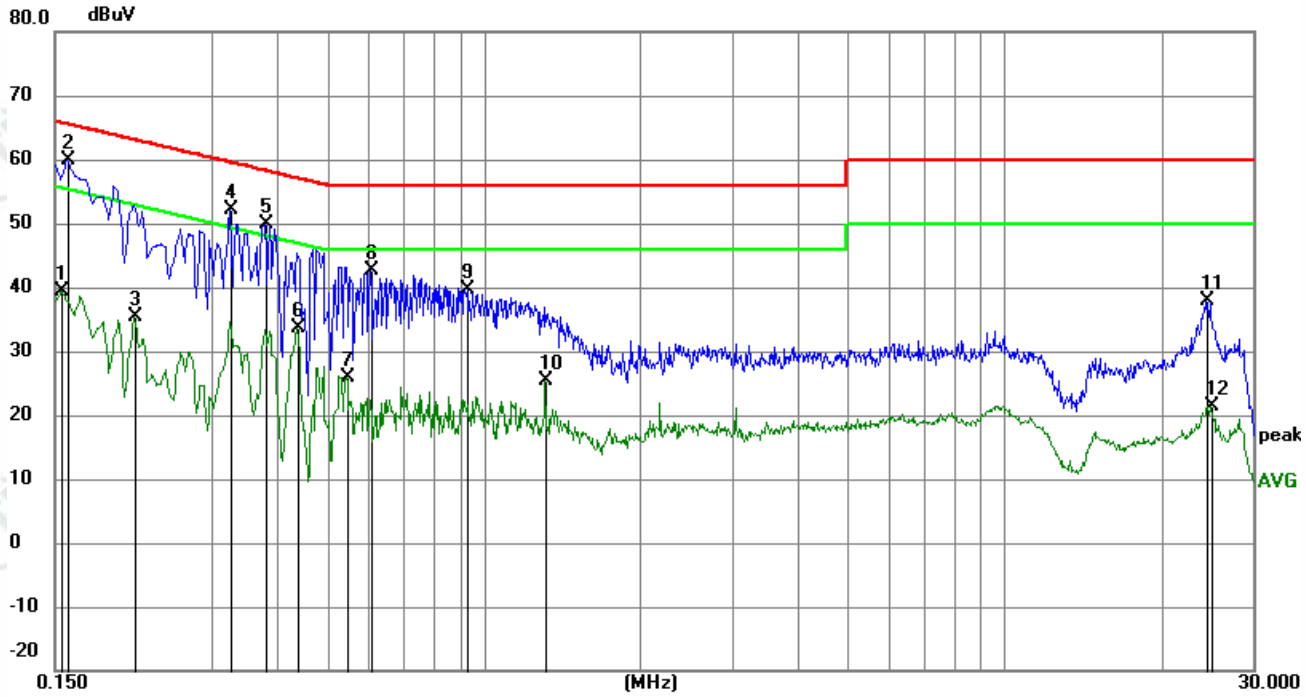

No.	Mk.	Freq.	Reading Level	Correct Factor	Measure-ment	Limit	Margin		
		MHz	dBuV	dB	dBuV	dBuV	dB	Detector	Comment
1		0.1545	29.51	9.87	39.38	55.75	-16.37	AVG	
2	*	0.1590	50.06	9.87	59.93	65.52	-5.59	peak	
3		0.2130	25.38	9.90	35.28	53.09	-17.81	AVG	
4		0.3255	42.04	10.04	52.08	59.57	-7.49	peak	
5		0.3795	39.89	9.99	49.88	58.29	-8.41	peak	
6		0.4380	23.73	9.96	33.69	47.10	-13.41	AVG	
7		0.5460	15.86	10.01	25.87	46.00	-20.13	AVG	
8		0.6045	32.52	10.06	42.58	56.00	-13.42	peak	
9		0.9285	29.82	9.84	39.66	56.00	-16.34	peak	
10		1.3110	15.51	9.82	25.33	46.00	-20.67	AVG	
11		24.5220	27.78	10.00	37.78	60.00	-22.22	peak	
12		25.0035	11.33	10.00	21.33	50.00	-28.67	AVG	

Remark:

1. The following Quasi-Peak and Average measurements were performed on the EUT:
2. Final Test Level =Receiver Reading + LISN Factor + Cable Loss.
3. If the Peak value under Average limit, the Average value is not recorded in the report.

6.3 Maximum Conducted Output Power

Test Requirement:	47 CFR Part 15C Section 15.407 (a)
Test Method:	KDB789033 D02 General UNII Test Procedures New Rules v02r01 Section E
Test Setup:	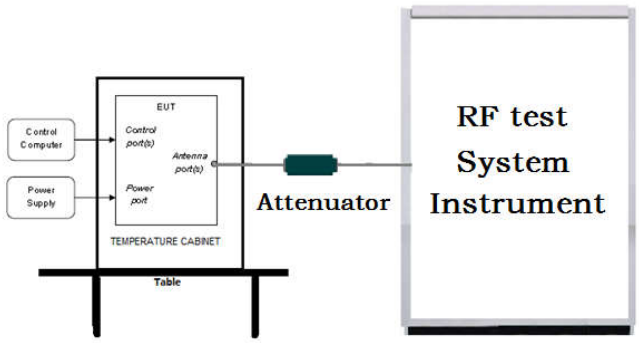
Test Procedure:	1. The testing follows the Measurement Procedure of KDB789033 D02 General UNII Test Procedures New Rules v02r01 Section E, 3, a 2. The RF output of EUT was connected to the power meter by RF cable and attenuator. The path loss was compensated to the results for each measurement. 3. Set to the maximum power setting and enable the EUT transmit continuously. 4. Measure the conducted output power and record the results in the test report.
Limit:	<table><tr><th>Frequency band (MHz)</th><th>Limit</th></tr><tr><td rowspan="2">5150-5250</td><td>≤1W(30dBm) for master device</td></tr><tr><td>≤250mW(24dBm) for client device</td></tr><tr><td>5725-5850</td><td>≤1W(30dBm)</td></tr><tr><td>Remark:</td><td>* Where B is the 26dB emission bandwidth in MHz The maximum conducted output power must be measured over any interval of continuous transmission using instrumentation calibrated in terms of an rms-equivalent voltage.</td></tr></table>
Test Mode:	Transmitting mode with modulation
Test Results:	Refer to Appendix A

6.4 6dB Emission Bandwidth

Test Requirement:	47 CFR Part 15C Section 15.407 (e)
Test Method:	KDB789033 D02 General UNII Test Procedures New Rules v02r01 Section C
Test Setup:	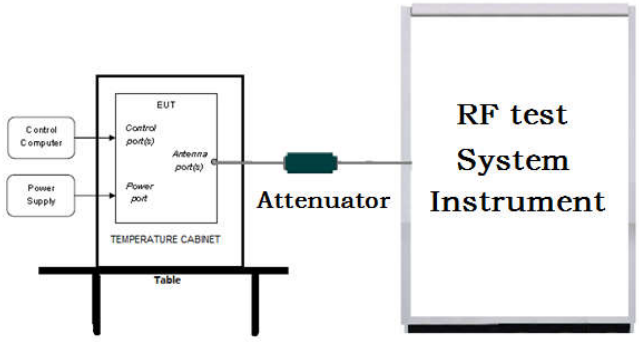 Remark: Offset=Cable loss+ attenuation factor.
Test Procedure:	1. KDB789033 D02 General UNII Test Procedures New Rules v02r01 Section C 2. Set to the maximum power setting and enable the EUT transmit continuously. 3. Make the measurement with the spectrum analyzer's resolution bandwidth (RBW) = 100 kHz. Set the Video bandwidth (VBW) = 300 kHz. In order to make an accurate measurement. The 6dB bandwidth must be greater than 500 kHz. 4. Measure and record the results in the test report.
Limit:	≥ 500 kHz
Test Mode:	Transmitting mode with modulation
Test Results:	Refer to Appendix A

6.5 26dB Emission Bandwidth and 99% Occupied Bandwidth

Test Requirement:	47 CFR Part 15C Section 15.407 (a)
Test Method:	KDB789033 D02 General UNII Test Procedures New Rules v02r01 Section D
Test Setup:	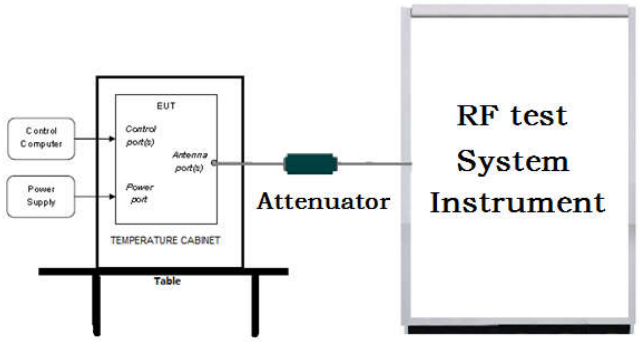 Remark: Offset=Cable loss+ attenuation factor.
Test Procedure:	1. KDB789033 D02 General UNII Test Procedures New Rules v02r01 Section D 2. Set to the maximum power setting and enable the EUT transmit continuously. 3. Make the measurement with the spectrum analyzer's resolution bandwidth (RBW) = 100 kHz. Set the Video bandwidth (VBW) = 300 kHz. In order to make an accurate measurement. 4. Measure and record the results in the test report.
Limit:	No restriction limits
Test Mode:	Transmitting mode with modulation
Test Results:	Refer to Appendix A

6.6 Maximum Power Spectral Density

Test Requirement:	47 CFR Part 15C Section 15.407 (a)
Test Method:	KDB789033 D02 General UNII Test Procedures New Rules v02r01 Section F
Test Setup:	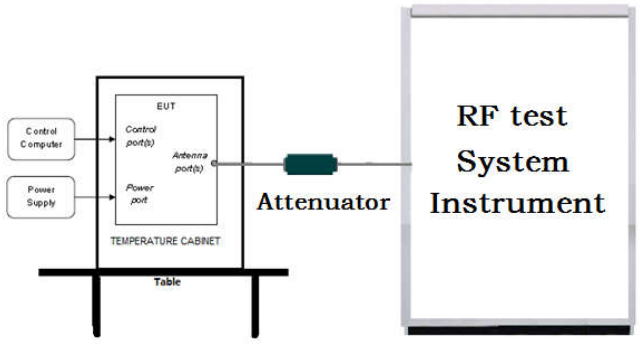 Remark: Offset=Cable loss+ attenuation factor.
Test Procedure:	1. Set the spectrum analyzer or EMI receiver span to view the entire emission bandwidth. 1. Set RBW = 510 kHz/1 MHz, VBW ≥ 3*RBW, Sweep time = Auto, Detector = RMS. 2. Allow the sweeps to continue until the trace stabilizes. 3. Use the peak marker function to determine the maximum amplitude level.
Limit:	

Frequency band (MHz)	Limit
5150-5250	≤17dBm in 1MHz for master device
	≤11dBm in 1MHz for client device
5725-5850	≤30dBm in 500kHz
Remark:	The maximum power spectral density is measured as a conducted emission by direct connection of a calibrated test instrument to the equipment under test.

Test Mode:	Transmitting mode with modulation
Test Results:	Refer to Appendix A

6.7 Frequency Stability

Test Requirement:	47 CFR Part 15C Section 15.407 (g)
Test Method:	ANSI C63.10: 2013
Test Setup:	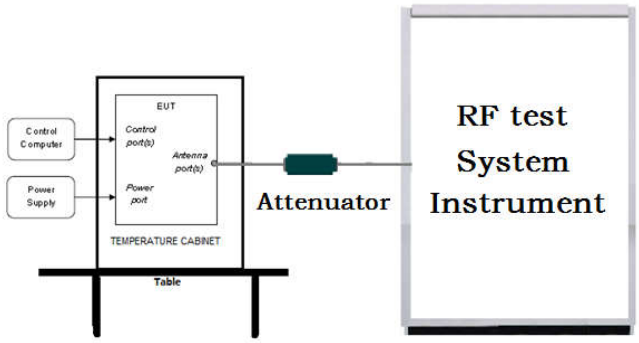 Remark: Offset=Cable loss+ attenuation factor.
Test Procedure:	1.The EUT was placed inside the environmental test chamber and powered by nominal AC/DC voltage. 2. Turn the EUT on and couple its output to a spectrum analyzer. 3. Turn the EUT off and set the chamber to the highest temperature specified. d. Allow sufficient time (approximately 30 min) for the temperature of the chamber to stabilize. 4. Repeat step 2 and 3 with the temperature chamber set to the lowest temperature. 5. The test chamber was allowed to stabilize at +20 degree C for a minimum of 30 minutes. The supply voltage was then adjusted on the EUT from 85% to 115% and the frequency record.
Limit:	The frequency tolerance shall be maintained within the band of operation frequency over a temperature variation of 0 degrees to 45 degrees C at normal supply voltage, and for a variation in the primary supply voltage from 85% to 115% of the rated supply voltage at a temperature of 20 degrees C.
Test Mode:	Transmitting mode with modulation
Test Results:	Refer to Appendix A

6.8 Radiated Emission

Test Requirement:	47 CFR Part 15C Section 15.209 and 15.407 (b)
Test Method:	ANSI C63.10 2013
Test Site:	Measurement Distance: 3m (Semi-Anechoic Chamber)
Receiver Setup:	

Frequency	Detector	RBW	VBW	Remark
0.009MHz-0.090MHz	Peak	10kHz	30kHz	Peak
0.009MHz-0.090MHz	Average	10kHz	30kHz	Average
0.090MHz-0.110MHz	Quasi-peak	10kHz	30kHz	Quasi-peak
0.110MHz-0.490MHz	Peak	10kHz	30kHz	Peak
0.110MHz-0.490MHz	Average	10kHz	30kHz	Average
0.490MHz -30MHz	Quasi-peak	10kHz	30kHz	Quasi-peak
30MHz-1GHz	Quasi-peak	100 kHz	300kHz	Quasi-peak
Above 1GHz	Peak	1MHz	3MHz	Peak
	Peak	1MHz	10kHz	Average

Limit:

Frequency	Field strength (microvolt/meter)	Limit (dBuV/m)	Remark	Measurement distance (m)
0.009MHz-0.490MHz	2400/F(kHz)	-	-	300
0.490MHz-1.705MHz	24000/F(kHz)	-	-	30
1.705MHz-30MHz	30	-	-	30
30MHz-88MHz	100	40.0	Quasi-peak	3
88MHz-216MHz	150	43.5	Quasi-peak	3
216MHz-960MHz	200	46.0	Quasi-peak	3
960MHz-1GHz	500	54.0	Quasi-peak	3
Above 1GHz	500	54.0	Average	3

*(1) For transmitters operating in the 5.15-5.25 GHz band: All emissions outside of the 5.15-5.35 GHz band shall not exceed an e.i.r.p. of −27 dBm/MHz.
(2) For transmitters operating in the 5.25-5.35 GHz band: All emissions outside of the 5.15-5.35 GHz band shall not exceed an e.i.r.p. of −27 dBm/MHz.
(3) For transmitters operating in the 5.47-5.725 GHz band: All emissions outside of the 5.47-5.725 GHz band shall not exceed an e.i.r.p. of −27 dBm/MHz.
(4) For transmitters operating in the 5.725-5.85 GHz band:
(i) All emissions shall be limited to a level of −27 dBm/MHz at 75 MHz or more above or below the band edge increasing linearly to 10 dBm/MHz at 25 MHz above or below the band edge, and from 25 MHz above or below the band edge increasing linearly to a level of 15.6 dBm/MHz at 5 MHz above or below the band edge, and from 5 MHz above or below the band edge increasing linearly to a level of 27 dBm/MHz at the band edge.

Remark: The emission limits shown in the above table are based on measurements employing a CISPR quasi-peak detector except for the frequency bands 9-90kHz, 110-490kHz and above 1000 MHz. Radiated emission limits in these three bands are based on measurements employing

	an average detector, the peak field strength of any emission shall not exceed the maximum permitted average limits specified above by more than 20 dB under any condition of modulation. Note: (i) EIRP = ((E*d)^2) / 30 where: • E is the field strength in V/m; • d is the measurement distance in meters; • EIRP is the equivalent isotropically radiated power in watts. (ii) Working in dB units, the above equation is equivalent to: EIRP[dBm] = E[dBμV/m] + 20 log(d[meters]) - 104.77 (iii) Or, if d is 3 meters: EIRP[dBm] = E[dBμV/m] - 95.2
Test Setup:	

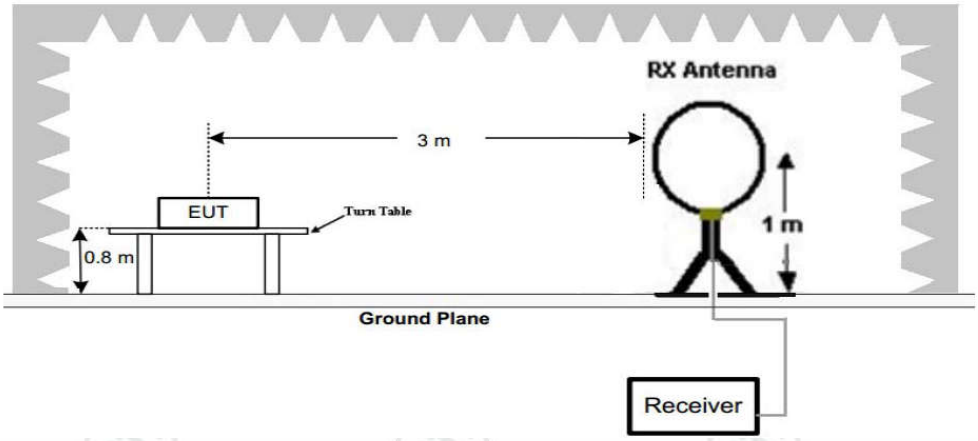

Figure 1. Below 30MHz

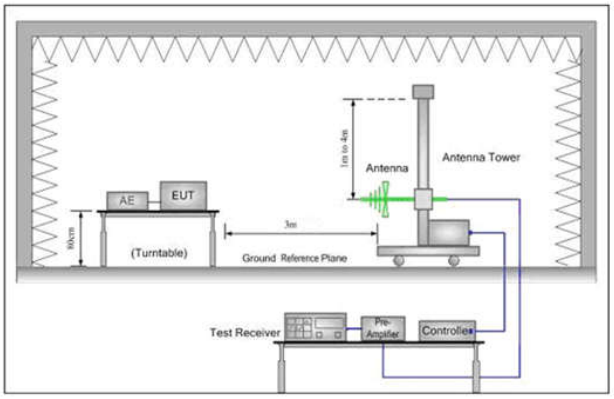

Figure 2. 30MHz to 1GHz

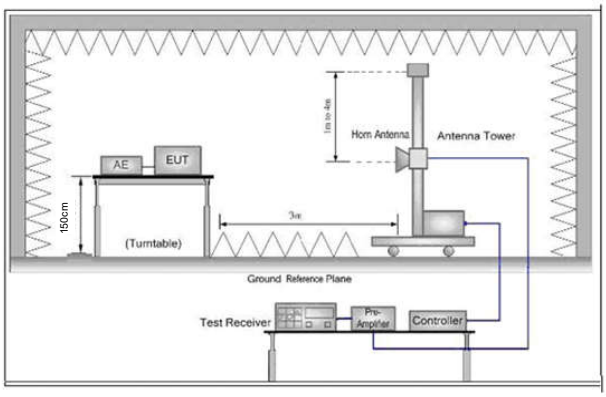

Figure 3. Above 1 GHz

Test Procedure:	a. 1) Below 1G: The EUT was placed on the top of a rotating table 0.8 meters above the ground at a 3 meter semi-anechoic camber. The table was rotated 360 degrees to determine the position of the highest radiation. 2) Above 1G: The EUT was placed on the top of a rotating table 1.5 meters above the ground at a 3 meter semi-anechoic camber. The table was rotated 360 degrees to determine the position of the highest radiation. Note: For the radiated emission test above 1GHz:

	Place the measurement antenna away from each area of the EUT determined to be a source of emissions at the specified measurement distance, while keeping the measurement antenna aimed at the source of emissions at each frequency of significant emissions, with polarization oriented for maximum response. The measurement antenna may have to be higher or lower than the EUT, depending on the radiation pattern of the emission and staying aimed at the emission source for receiving the maximum signal. The final measurement antenna elevation shall be that which maximizes the emissions. The measurement antenna elevation for maximum emissions shall be restricted to a range of heights of from 1 m to 4 m above the ground or reference ground plane. b. The EUT was set 3 meters away from the interference-receiving antenna, which was mounted on the top of a variable-height antenna tower. c. The antenna height is varied from one meter to four meters above the ground to determine the maximum value of the field strength. Both horizontal and vertical polarizations of the antenna are set to make the measurement. d. For each suspected emission, the EUT was arranged to its worst case and then the antenna was tuned to heights from 1 meter to 4 meters (for the test frequency of below 30MHz, the antenna was tuned to heights 1 meter) and the rotatable table was turned from 0 degrees to 360 degrees to find the maximum reading. e. The test-receiver system was set to Peak Detect Function and Specified Bandwidth with Maximum Hold Mode. f. If the emission level of the EUT in peak mode was 10dB lower than the limit specified, then testing could be stopped and the peak values of the EUT would be reported. Otherwise the emissions that did not have 10dB margin would be re-tested one by one using peak, quasi-peak or average method as specified and then reported in a data sheet. g. Test the EUT in the lowest channel, the middle channel and the highest channel h. The radiation measurements are performed in X, Y, Z axis positioning for Transmitting mode, and found the X axis positioning which it is the worst case. i. Repeat above procedures until all frequencies measured was complete.
Test Mode:	Transmitting mode with modulation
Test Results:	Pass

Radiated Spurious Emissions test Data:
Radiated Emission below 1GHz

During the test, the Radiates Emission from 30MHz to 1GHz was performed in all modes, only the worst case antenna1 middle channel of 6Mbps for 802.11a was recorded in the report.

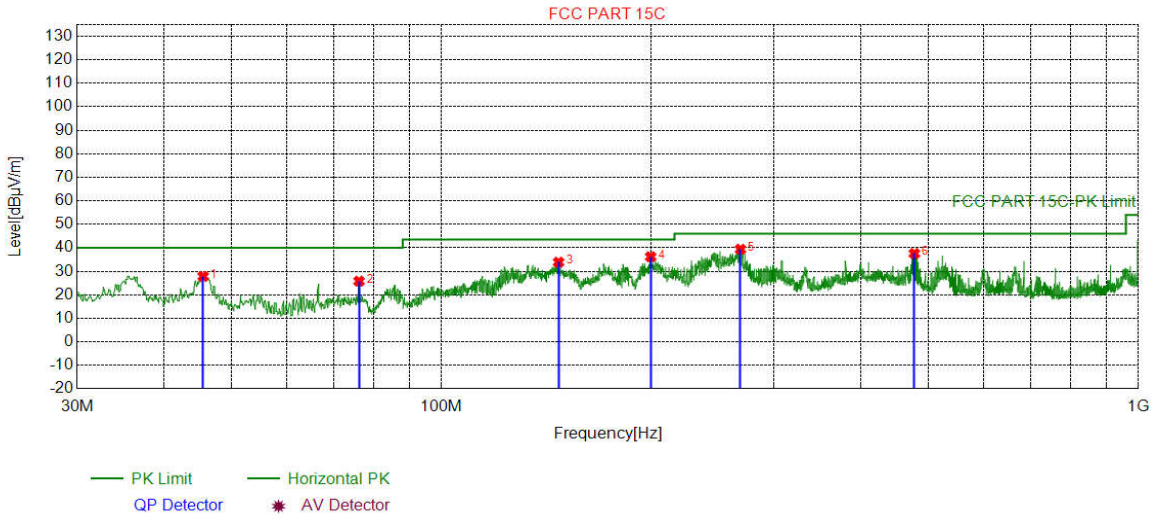

Suspected List									
NO	Freq. [MHz]	Factor [dB]	Reading [dBµV]	Level [dBµV/m]	Limit [dBµV/m]	Margin [dB]	Result	Polarity	Remark
1	45.5216	-17.80	45.64	27.84	40.00	12.16	PASS	Horizontal	PK
2	76.1766	-23.11	48.92	25.81	40.00	14.19	PASS	Horizontal	PK
3	147.284	-23.12	57.00	33.88	43.50	9.62	PASS	Horizontal	PK
4	199.670	-19.37	55.56	36.19	43.50	7.31	PASS	Horizontal	PK
5	268.643	-17.35	56.73	39.38	46.00	6.62	PASS	Horizontal	PK
6	477.214	-12.65	50.21	37.56	46.00	8.44	PASS	Horizontal	PK

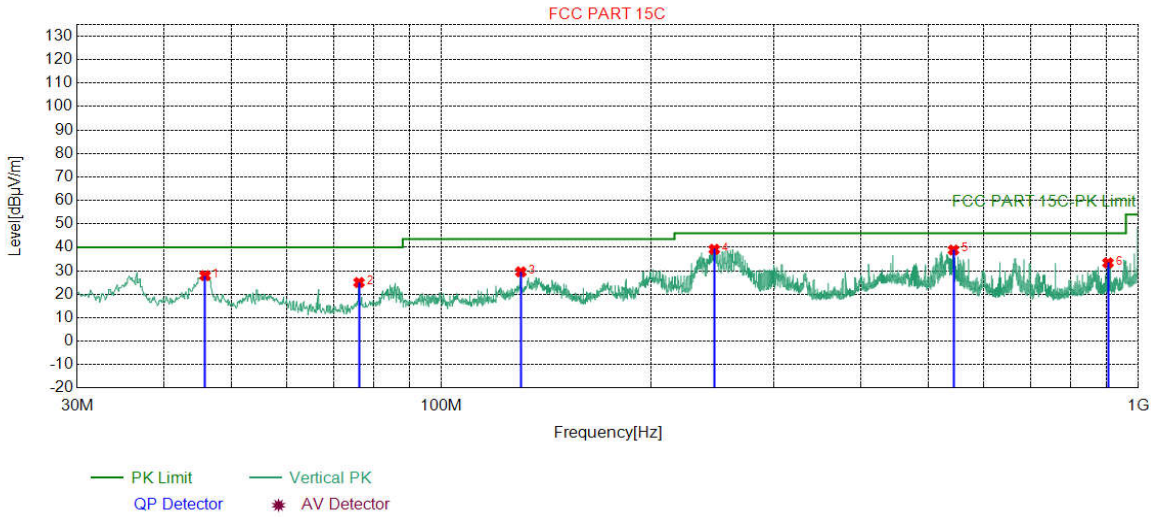

Suspected List									
NO	Freq. [MHz]	Factor [dB]	Reading [dBµV]	Level [dBµV/m]	Limit [dBµV/m]	Margin [dB]	Result	Polarity	Remark
1	45.8126	-17.82	45.76	27.94	40.00	12.06	PASS	Vertical	PK
2	76.1766	-23.11	48.10	24.99	40.00	15.01	PASS	Vertical	PK
3	130.017	-22.99	52.54	29.55	43.50	13.95	PASS	Vertical	PK
4	246.331	-17.93	57.07	39.14	46.00	6.86	PASS	Vertical	PK
5	543.084	-11.30	50.13	38.83	46.00	7.17	PASS	Vertical	PK
6	904.930	-5.71	39.07	33.36	46.00	12.64	PASS	Vertical	PK

Transmitter Emission above 1GHz

Remark: During the test, the Radiates Emission from 1GHz to 40GHz was performed in all modes,

for 20MHz Occupied Bandwidth, MIMO 802.11 n(HT20) mode was the worst case;

for 40MHz Occupied Bandwidth, MIMO 802.11 n(HT40) mode was the worst case;

for 80MHz Occupied Bandwidth, MIMO 802.11 ac(VHT80) mode was the worst case;

only the worst case was in the report.

For 2x2 MIMO:

Mode:			802.11 n(HT20) Transmitting					Channel:		5180 MHz	
NO	Freq. [MHz]	Ant Factor [dB]	Cable loss [dB]	Pream gain [dB]	Reading [dBμV]	Level [dBμV/m]	Limit [dBμV/m]	Margin [dB]	Result	Polarity	Remark
1	1066.5567	27.97	2.87	-43.03	63.93	51.74	68.20	16.46	Pass	Horizontal	Peak
2	1333.3333	28.23	3.33	-42.75	62.06	50.87	68.20	17.33	Pass	Horizontal	Peak
3	1793.1793	30.33	3.86	-42.71	58.28	49.76	68.20	18.44	Pass	Horizontal	Peak
4	4220.0220	34.11	6.28	-42.91	54.25	51.73	68.20	16.47	Pass	Horizontal	Peak
5	6493.3993	35.90	8.64	-42.50	49.14	51.18	68.20	17.02	Pass	Horizontal	Peak
6	9044.5022	37.69	6.76	-42.01	48.87	51.31	68.20	16.89	Pass	Horizontal	Peak
7	1200.2200	28.10	3.04	-42.89	64.91	53.16	68.20	15.04	Pass	Vertical	Peak
8	2391.0891	32.25	4.64	-43.12	57.48	51.25	68.20	16.95	Pass	Vertical	Peak
9	3198.0198	33.28	5.74	-43.10	53.07	48.99	68.20	19.21	Pass	Vertical	Peak
10	4220.0220	34.11	6.28	-42.91	56.14	53.62	68.20	14.58	Pass	Vertical	Peak
11	7633.3817	36.55	6.42	-42.13	48.96	49.80	68.20	18.40	Pass	Vertical	Peak
12	10594.204	38.52	7.27	-42.00	49.11	52.90	68.20	15.30	Pass	Vertical	Peak

Mode:			802.11 n(HT20) Transmitting					Channel:		5200 MHz	
NO	Freq. [MHz]	Ant Factor [dB]	Cable loss [dB]	Pream gain [dB]	Reading [dBμV]	Level [dBμV/m]	Limit [dBμV/m]	Margin [dB]	Result	Polarity	Remark
1	1066.5567	27.97	2.87	-43.03	64.73	52.54	68.20	15.66	Pass	Horizontal	Peak
2	1333.8834	28.23	3.33	-42.75	61.09	49.90	68.20	18.30	Pass	Horizontal	Peak
3	1996.6997	31.68	4.13	-43.19	57.67	50.29	68.20	17.91	Pass	Horizontal	Peak
4	2951.0451	33.12	5.26	-43.10	50.65	45.93	68.20	22.27	Pass	Horizontal	Peak
5	4220.0220	34.11	6.28	-42.91	54.88	52.36	68.20	15.84	Pass	Horizontal	Peak
6	8909.9455	37.50	6.90	-42.00	48.89	51.29	68.20	16.91	Pass	Horizontal	Peak
7	1200.2200	28.10	3.04	-42.89	63.44	51.69	68.20	16.51	Pass	Vertical	Peak
8	1964.2464	31.46	4.12	-43.11	56.78	49.25	68.20	18.95	Pass	Vertical	Peak
9	2398.2398	32.26	4.64	-43.12	58.02	51.80	68.20	16.40	Pass	Vertical	Peak
10	4220.5721	34.11	6.28	-42.91	54.38	51.86	68.20	16.34	Pass	Vertical	Peak
11	8779.4140	37.21	6.95	-41.99	48.21	50.38	68.20	17.82	Pass	Vertical	Peak
12	12562.528	39.60	7.84	-41.90	49.14	54.68	68.20	13.52	Pass	Vertical	Peak

Mode:			802.11 n(HT20) Transmitting					Channel:		5240 MHz	
NO	Freq. [MHz]	Ant Factor [dB]	Cable loss [dB]	Pream gain [dB]	Reading [dBμV]	Level [dBμV/m]	Limit [dBμV/m]	Margin [dB]	Result	Polarity	Remark
1	1066.5567	27.97	2.87	-43.03	61.95	49.76	68.20	18.44	Pass	Horizontal	Peak
2	1992.2992	31.65	4.13	-43.18	57.53	50.13	68.20	18.07	Pass	Horizontal	Peak
3	3172.7173	33.27	5.60	-43.10	50.05	45.82	68.20	22.38	Pass	Horizontal	Peak
4	4220.0220	34.11	6.28	-42.91	54.10	51.58	68.20	16.62	Pass	Horizontal	Peak
5	6500.0000	35.90	8.67	-42.50	49.21	51.28	68.20	16.92	Pass	Horizontal	Peak
6	9851.8426	37.74	7.25	-42.10	48.71	51.60	68.20	16.60	Pass	Horizontal	Peak
7	1066.5567	27.97	2.87	-43.03	65.73	53.54	68.20	14.66	Pass	Vertical	Peak
8	1790.4290	30.32	3.86	-42.71	56.85	48.32	68.20	19.88	Pass	Vertical	Peak
9	2391.6392	32.25	4.64	-43.12	58.70	52.47	68.20	15.73	Pass	Vertical	Peak
10	4220.0220	34.11	6.28	-42.91	55.38	52.86	68.20	15.34	Pass	Vertical	Peak
11	6330.0330	35.87	8.60	-42.54	49.29	51.22	68.20	16.98	Pass	Vertical	Peak
12	11419.371	38.85	7.68	-41.99	48.86	53.40	68.20	14.80	Pass	Vertical	Peak

Mode:			802.11 n(HT40) Transmitting					Channel:		5190 MHz	
NO	Freq. [MHz]	Ant Factor [dB]	Cable loss [dB]	Pream gain [dB]	Reading [dBμV]	Level [dBμV/m]	Limit [dBμV/m]	Margin [dB]	Result	Polarity	Remark
1	1066.5567	27.97	2.87	-43.03	63.12	50.93	68.20	17.27	Pass	Horizontal	Peak
2	1333.3333	28.23	3.33	-42.75	62.59	51.40	68.20	16.80	Pass	Horizontal	Peak
3	1992.2992	31.65	4.13	-43.18	55.43	48.03	68.20	20.17	Pass	Horizontal	Peak
4	4220.0220	34.11	6.28	-42.91	53.66	51.14	68.20	17.06	Pass	Horizontal	Peak
5	6332.7833	35.87	8.61	-42.54	50.01	51.95	68.20	16.25	Pass	Horizontal	Peak
6	10608.005	38.52	7.26	-42.00	49.34	53.12	68.20	15.08	Pass	Horizontal	Peak
7	1199.6700	28.10	3.04	-42.89	62.92	51.17	68.20	17.03	Pass	Vertical	Peak
8	2191.4191	31.97	4.38	-43.16	56.43	49.62	68.20	18.58	Pass	Vertical	Peak
9	3166.1166	33.27	5.56	-43.10	51.63	47.36	68.20	20.84	Pass	Vertical	Peak
10	4220.5721	34.11	6.28	-42.91	54.78	52.26	68.20	15.94	Pass	Vertical	Peak
11	6485.1485	35.90	8.61	-42.51	49.19	51.19	68.20	17.01	Pass	Vertical	Peak
12	10622.956	38.52	7.27	-42.00	48.85	52.64	68.20	15.56	Pass	Vertical	Peak

Mode:			802.11 n(HT40) Transmitting					Channel:		5230 MHz	
NO	Freq. [MHz]	Ant Factor [dB]	Cable loss [dB]	Pream gain [dB]	Reading [dBμV]	Level [dBμV/m]	Limit [dBμV/m]	Margin [dB]	Result	Polarity	Remark
1	1066.5567	27.97	2.87	-43.03	63.06	50.87	68.20	17.33	Pass	Horizont	Peak
2	1333.3333	28.23	3.33	-42.75	62.82	51.63	68.20	16.57	Pass	Horizont	Peak
3	1792.0792	30.33	3.86	-42.71	56.90	48.38	68.20	19.82	Pass	Horizont	Peak
4	4220.0220	34.11	6.28	-42.91	54.87	52.35	68.20	15.85	Pass	Horizont	Peak
5	6463.6964	35.89	8.52	-42.51	49.09	50.99	68.20	17.21	Pass	Horizont	Peak
6	10594.204	38.52	7.27	-42.00	48.47	52.26	68.20	15.94	Pass	Horizont	Peak
7	1067.1067	27.97	2.87	-43.03	65.62	53.43	68.20	14.77	Pass	Vertical	Peak
8	1200.2200	28.10	3.04	-42.89	65.07	53.32	68.20	14.88	Pass	Vertical	Peak
9	1594.6095	29.02	3.59	-42.90	58.96	48.67	68.20	19.53	Pass	Vertical	Peak
10	3190.3190	33.28	5.70	-43.11	52.01	47.88	68.20	20.32	Pass	Vertical	Peak
11	6473.5974	35.89	8.56	-42.50	49.20	51.15	68.20	17.05	Pass	Vertical	Peak
12	10458.497	38.44	7.49	-42.00	48.86	52.79	68.20	15.41	Pass	Vertical	Peak

Mode:			802.11 ac(VHT80) Transmitting					Channel:		5210 MHz	
NO	Freq. [MHz]	Ant Factor [dB]	Cable loss [dB]	Pream gain [dB]	Reading [dBμV]	Level [dBμV/m]	Limit [dBμV/m]	Margin [dB]	Result	Polarity	Remark
1	1066.5567	27.97	2.87	-43.03	63.45	51.26	68.20	16.94	Pass	Horizontal	Peak
2	1333.3333	28.23	3.33	-42.75	62.43	51.24	68.20	16.96	Pass	Horizontal	Peak
3	2000.0000	31.70	4.13	-43.20	55.39	48.02	68.20	20.18	Pass	Horizontal	Peak
4	4220.0220	34.11	6.28	-42.91	53.97	51.45	68.20	16.75	Pass	Horizontal	Peak
5	6333.3333	35.87	8.61	-42.53	49.26	51.21	68.20	16.99	Pass	Horizontal	Peak
6	10409.045	38.37	7.53	-42.01	48.76	52.65	68.20	15.55	Pass	Horizontal	Peak
7	1066.5567	27.97	2.87	-43.03	66.07	53.88	68.20	14.32	Pass	Vertical	Peak
8	1333.3333	28.23	3.33	-42.75	60.19	49.00	68.20	19.20	Pass	Vertical	Peak
9	2196.3696	31.97	4.39	-43.16	58.08	51.28	68.20	16.92	Pass	Vertical	Peak
10	4220.0220	34.11	6.28	-42.91	55.39	52.87	68.20	15.33	Pass	Vertical	Peak
11	6378.9879	35.88	8.59	-42.53	48.91	50.85	68.20	17.35	Pass	Vertical	Peak
12	10417.095	38.38	7.53	-42.01	48.86	52.76	68.20	15.44	Pass	Vertical	Peak

Mode:			802.11 n(HT20) Transmitting					Channel:		5745 MHz	
NO	Freq. [MHz]	Ant Factor [dB]	Cable loss [dB]	Pream gain [dB]	Reading [dBμV]	Level [dBμV/m]	Limit [dBμV/m]	Margin [dB]	Result	Polarity	Remark
1	1066.5567	27.97	2.54	-43.04	61.18	48.65	68.20	19.55	Pass	Horizontal	Peak
2	1333.3333	28.23	2.93	-42.74	63.44	51.86	68.20	16.34	Pass	Horizontal	Peak
3	1792.6293	30.33	3.33	-42.70	57.00	47.96	68.20	20.24	Pass	Horizontal	Peak
4	4219.4719	34.11	5.43	-42.92	54.18	50.80	68.20	17.40	Pass	Horizontal	Peak
5	6489.5490	35.90	7.47	-42.50	50.01	50.88	68.20	17.32	Pass	Horizontal	Peak
6	10260.750	38.17	7.26	-42.05	49.10	52.48	68.20	15.72	Pass	Horizontal	Peak
7	1067.1067	27.97	2.54	-43.04	63.79	51.26	68.20	16.94	Pass	Vertical	Peak
8	1199.6700	28.10	2.87	-42.89	64.90	52.98	68.20	15.22	Pass	Vertical	Peak
9	1886.6887	30.95	3.53	-42.92	55.34	46.90	68.20	21.30	Pass	Vertical	Peak
10	4220.0220	34.11	5.43	-42.91	54.56	51.19	68.20	17.01	Pass	Vertical	Peak
11	6497.2497	35.90	7.54	-42.50	49.12	50.06	68.20	18.14	Pass	Vertical	Peak
12	10390.326	38.35	7.48	-42.03	49.22	53.02	68.20	15.18	Pass	Vertical	Peak

Mode:			802.11 n(HT20) Transmitting					Channel:		5785 MHz	
NO	Freq. [MHz]	Ant Factor [dB]	Cable loss [dB]	Pream gain [dB]	Reading [dBμV]	Level [dBμV/m]	Limit [dBμV/m]	Margin [dB]	Result	Polarity	Remark
1	1067.1067	27.97	2.54	-43.04	61.15	48.62	68.20	19.58	Pass	Horizontal	Peak
2	1333.8834	28.23	2.93	-42.74	63.66	52.08	68.20	16.12	Pass	Horizontal	Peak
3	2132.5633	31.89	3.71	-43.18	52.89	45.31	68.20	22.89	Pass	Horizontal	Peak
4	2951.0451	33.12	4.58	-43.10	50.32	44.92	68.20	23.28	Pass	Horizontal	Peak
5	5786.5787	35.46	7.00	-42.60	51.40	51.26	68.20	16.94	Pass	Horizontal	Peak
6	9759.3173	37.70	6.86	-42.10	48.59	51.05	68.20	17.15	Pass	Horizontal	Peak
7	1200.2200	28.10	2.87	-42.89	63.25	51.33	68.20	16.87	Pass	Vertical	Peak
8	1333.3333	28.23	2.93	-42.74	60.82	49.24	68.20	18.96	Pass	Vertical	Peak
9	1990.0990	31.63	3.65	-43.17	57.97	50.08	68.20	18.12	Pass	Vertical	Peak
10	4220.0220	34.11	5.43	-42.91	56.48	53.11	68.20	15.09	Pass	Vertical	Peak
11	6464.7965	35.89	7.26	-42.51	49.23	49.87	68.20	18.33	Pass	Vertical	Peak
12	10401.826	38.36	7.54	-42.02	48.54	52.42	68.20	15.78	Pass	Vertical	Peak

Mode:			802.11 n(HT20) Transmitting					Channel:		5825 MHz	
NO	Freq. [MHz]	Ant Factor [dB]	Cable loss [dB]	Pream gain [dB]	Reading [dBμV]	Level [dBμV/m]	Limit [dBμV/m]	Margin [dB]	Result	Polarity	Remark
1	1067.1067	27.97	2.54	-43.04	61.37	48.84	68.20	19.36	Pass	Horizontal	Peak
2	1333.3333	28.23	2.93	-42.74	63.37	51.79	68.20	16.41	Pass	Horizontal	Peak
3	1995.0495	31.67	3.65	-43.19	56.32	48.45	68.20	19.75	Pass	Horizontal	Peak
4	4220.0220	34.11	5.43	-42.91	54.17	50.80	68.20	17.40	Pass	Horizontal	Peak
5	6457.0957	35.89	7.19	-42.51	49.56	50.13	68.20	18.07	Pass	Horizontal	Peak
6	9030.9354	37.69	6.78	-42.00	48.83	51.30	68.20	16.90	Pass	Horizontal	Peak
7	1066.5567	27.97	2.54	-43.04	64.58	52.05	68.20	16.15	Pass	Vertical	Peak
8	1333.3333	28.23	2.93	-42.74	60.53	48.95	68.20	19.25	Pass	Vertical	Peak
9	2394.3894	32.25	4.00	-43.12	56.22	49.35	68.20	18.85	Pass	Vertical	Peak
10	4220.0220	34.11	5.43	-42.91	54.79	51.42	68.20	16.78	Pass	Vertical	Peak
11	6442.2442	35.89	7.11	-42.52	49.43	49.91	68.20	18.29	Pass	Vertical	Peak
12	10212.447	38.10	7.14	-42.06	49.45	52.63	68.20	15.57	Pass	Vertical	Peak

Mode:			802.11 n(HT40) Transmitting					Channel:		5755 MHz	
NO	Freq. [MHz]	Ant Factor [dB]	Cable loss [dB]	Pream gain [dB]	Reading [dBμV]	Level [dBμV/m]	Limit [dBμV/m]	Margin [dB]	Result	Polarity	Remark
1	1066.0066	27.97	2.54	-43.04	62.33	49.80	68.20	18.40	Pass	Horizontal	Peak
2	1333.8834	28.23	2.93	-42.74	63.45	51.87	68.20	16.33	Pass	Horizontal	Peak
3	2134.2134	31.89	3.71	-43.18	53.25	45.67	68.20	22.53	Pass	Horizontal	Peak
4	2909.7910	33.06	4.49	-43.10	50.67	45.12	68.20	23.08	Pass	Horizontal	Peak
5	6491.1991	35.90	7.48	-42.50	49.16	50.04	68.20	18.16	Pass	Horizontal	Peak
6	9029.4020	37.69	6.78	-42.00	48.34	50.81	68.20	17.39	Pass	Horizontal	Peak
7	1200.2200	28.10	2.87	-42.89	63.42	51.50	68.20	16.70	Pass	Vertical	Peak
8	1996.1496	31.67	3.65	-43.19	55.02	47.15	68.20	21.05	Pass	Vertical	Peak
9	3165.0165	33.27	4.65	-43.10	58.08	52.90	68.20	15.30	Pass	Vertical	Peak
10	4220.0220	34.11	5.43	-42.91	55.27	51.90	68.20	16.30	Pass	Vertical	Peak
11	6495.0495	35.90	7.52	-42.50	48.98	49.90	68.20	18.30	Pass	Vertical	Peak
12	10407.193	38.37	7.54	-42.02	49.14	53.03	68.20	15.17	Pass	Vertical	Peak

Mode:			802.11 n(HT40) Transmitting					Channel:		5795 MHz	
NO	Freq. [MHz]	Ant Factor [dB]	Cable loss [dB]	Pream gain [dB]	Reading [dBμV]	Level [dBμV/m]	Limit [dBμV/m]	Margin [dB]	Result	Polarity	Remark
1	1133.6634	28.03	2.68	-42.96	61.31	49.06	68.20	19.14	Pass	Horizontal	Peak
2	1333.8834	28.23	2.93	-42.74	61.27	49.69	68.20	18.51	Pass	Horizontal	Peak
3	1794.8295	30.35	3.34	-42.72	57.10	48.07	68.20	20.13	Pass	Horizontal	Peak
4	3167.7668	33.27	4.66	-43.10	50.66	45.49	68.20	22.71	Pass	Horizontal	Peak
5	5800.3300	35.48	7.01	-42.60	50.31	50.20	68.20	18.00	Pass	Horizontal	Peak
6	11831.755	39.17	7.69	-41.94	48.58	53.50	68.20	14.70	Pass	Horizontal	Peak
7	1200.2200	28.10	2.87	-42.89	63.22	51.30	68.20	16.90	Pass	Vertical	Peak
8	1599.5600	29.06	3.23	-42.90	57.82	47.21	68.20	20.99	Pass	Vertical	Peak
9	2393.8394	32.25	4.00	-43.12	57.28	50.41	68.20	17.79	Pass	Vertical	Peak
10	4220.0220	34.11	5.43	-42.91	55.64	52.27	68.20	15.93	Pass	Vertical	Peak
11	5521.4521	35.03	6.50	-42.59	49.92	48.86	68.20	19.34	Pass	Vertical	Peak
12	6945.4630	36.08	6.44	-42.24	48.34	48.62	68.20	19.58	Pass	Vertical	Peak

Mode:			802.11 ac(VHT80) Transmitting					Channel:		5775 MHz	
NO	Freq. [MHz]	Ant Factor [dB]	Cable loss [dB]	Pream gain [dB]	Reading [dBμV]	Level [dBμV/m]	Limit [dBμV/m]	Margin [dB]	Result	Polarity	Remark
1	1066.5567	27.97	2.54	-43.04	62.19	49.66	68.20	18.54	Pass	Horizontal	Peak
2	1333.8834	28.23	2.93	-42.74	63.12	51.54	68.20	16.66	Pass	Horizontal	Peak
3	2399.3399	32.26	4.00	-43.12	53.09	46.23	68.20	21.97	Pass	Horizontal	Peak
4	4220.0220	34.11	5.43	-42.91	55.02	51.65	68.20	16.55	Pass	Horizontal	Peak
5	6484.5985	35.90	7.43	-42.51	49.15	49.97	68.20	18.23	Pass	Horizontal	Peak
6	10195.579	38.07	7.10	-42.05	49.56	52.68	68.20	15.52	Pass	Horizontal	Peak
7	1133.1133	28.03	2.68	-42.96	63.61	51.36	68.20	16.84	Pass	Vertical	Peak
8	1795.3795	30.35	3.34	-42.71	60.50	51.48	68.20	16.72	Pass	Vertical	Peak
9	2399.8900	32.26	4.00	-43.12	58.22	51.36	68.20	16.84	Pass	Vertical	Peak
10	4220.0220	34.11	5.43	-42.91	56.00	52.63	68.20	15.57	Pass	Vertical	Peak
11	6481.2981	35.90	7.40	-42.51	48.92	49.71	68.20	18.49	Pass	Vertical	Peak
12	8866.8578	37.41	6.86	-42.00	48.76	51.03	68.20	17.17	Pass	Vertical	Peak

Note:

1) The field strength is calculated by adding the Antenna Factor, Cable Factor & Preamplifier. The basic equation with a sample calculation is as follows:

Final Test Level =Receiver Reading - Correct Factor

Correct Factor = Preamplifier Factor– Antenna Factor–Cable Factor

2) Scan from 9kHz to 40GHz, the disturbance above 18GHz and below 30MHz was very low, and the above harmonics were the highest point could be found when testing, so only the above harmonics had been displayed. The amplitude of spurious emissions from the radiator which are attenuated more than 20dB below the limit need not be reported.

6.9 Radiated Emission which fall in the restricted bands

Test Requirement:	47 CFR Part 15C Section 15.209 and 15.407 (b)
Test Method:	ANSI C63.10 2013
Test Site:	Measurement Distance: 3m (Semi-Anechoic Chamber)
Receiver Setup:	

Frequency	Detector	RBW	VBW	Remark
0.009MHz-0.090MHz	Peak	10kHz	30kHz	Peak
0.009MHz-0.090MHz	Average	10kHz	30kHz	Average
0.090MHz-0.110MHz	Quasi-peak	10kHz	30kHz	Quasi-peak
0.110MHz-0.490MHz	Peak	10kHz	30kHz	Peak
0.110MHz-0.490MHz	Average	10kHz	30kHz	Average
0.490MHz -30MHz	Quasi-peak	10kHz	30kHz	Quasi-peak
30MHz-1GHz	Quasi-peak	100 kHz	300kHz	Quasi-peak
Above 1GHz	Peak	1MHz	3MHz	Peak
	Peak	1MHz	10kHz	Average

Limit:

Frequency	Field strength (microvolt/meter)	Limit (dBuV/m)	Remark	Measurement distance (m)
0.009MHz-0.490MHz	2400/F(kHz)	-	-	300
0.490MHz-1.705MHz	24000/F(kHz)	-	-	30
1.705MHz-30MHz	30	-	-	30
30MHz-88MHz	100	40.0	Quasi-peak	3
88MHz-216MHz	150	43.5	Quasi-peak	3
216MHz-960MHz	200	46.0	Quasi-peak	3
960MHz-1GHz	500	54.0	Quasi-peak	3
Above 1GHz	500	54.0	Average	3

*(1) For transmitters operating in the 5.15-5.25 GHz band: All emissions outside of the 5.15-5.35 GHz band shall not exceed an e.i.r.p. of −27 dBm/MHz.
(2) For transmitters operating in the 5.25-5.35 GHz band: All emissions outside of the 5.15-5.35 GHz band shall not exceed an e.i.r.p. of −27 dBm/MHz.
(3) For transmitters operating in the 5.47-5.725 GHz band: All emissions outside of the 5.47-5.725 GHz band shall not exceed an e.i.r.p. of −27 dBm/MHz.
(4) For transmitters operating in the 5.725-5.85 GHz band:
(i) All emissions shall be limited to a level of −27 dBm/MHz at 75 MHz or more above or below the band edge increasing linearly to 10 dBm/MHz at 25 MHz above or below the band edge, and from 25 MHz above or below the band edge increasing linearly to a level of 15.6 dBm/MHz at 5 MHz above or below the band edge, and from 5 MHz above or below the band edge increasing linearly to a level of 27 dBm/MHz at the band edge.

Remark: The emission limits shown in the above table are based on measurements employing a CISPR quasi-peak detector except for the frequency bands 9-90kHz, 110-490kHz and above 1000 MHz. Radiated emission limits in these three bands are based on measurements employing an average detector, the peak field strength of any emission shall not exceed

	the maximum permitted average limits specified above by more than 20 dB under any condition of modulation. Note: (i) EIRP = ((E*d)^2) / 30 where: • E is the field strength in V/m; • d is the measurement distance in meters; • EIRP is the equivalent isotropically radiated power in watts. (ii) Working in dB units, the above equation is equivalent to: EIRP[dBm] = E[dBμV/m] + 20 log(d[meters]) - 104.77 (iii) Or, if d is 3 meters: EIRP[dBm] = E[dBμV/m] - 95.2
Test Setup:	

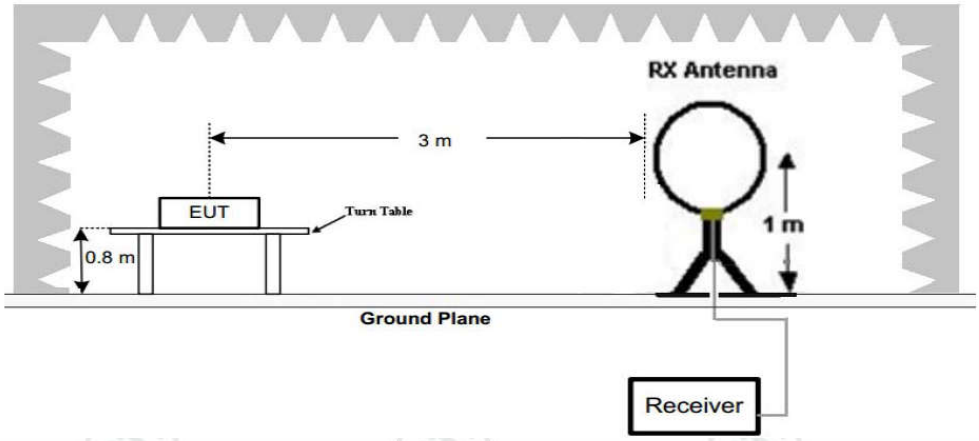

Figure 1. Below 30MHz

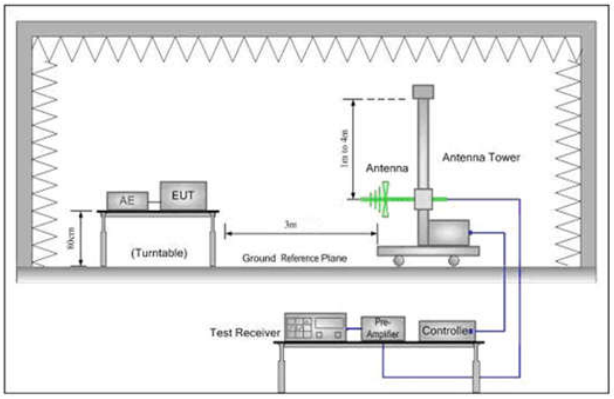

Figure 2. 30MHz to 1GHz

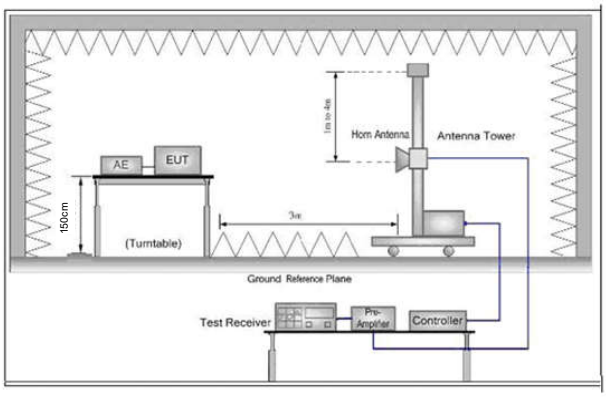

Figure 3. Above 1 GHz

Test Procedure:	j. 1) Below 1G: The EUT was placed on the top of a rotating table 0.8 meters above the ground at a 3 meter semi-anechoic camber. The table was rotated 360 degrees to determine the position of the highest radiation. 2) Above 1G: The EUT was placed on the top of a rotating table 1.5 meters above the ground at a 3 meter semi-anechoic camber. The table was rotated 360 degrees to determine the position of the highest radiation. Note: For the radiated emission test above 1GHz:

	Place the measurement antenna away from each area of the EUT determined to be a source of emissions at the specified measurement distance, while keeping the measurement antenna aimed at the source of emissions at each frequency of significant emissions, with polarization oriented for maximum response. The measurement antenna may have to be higher or lower than the EUT, depending on the radiation pattern of the emission and staying aimed at the emission source for receiving the maximum signal. The final measurement antenna elevation shall be that which maximizes the emissions. The measurement antenna elevation for maximum emissions shall be restricted to a range of heights of from 1 m to 4 m above the ground or reference ground plane. k. The EUT was set 3 meters away from the interference-receiving antenna, which was mounted on the top of a variable-height antenna tower. l. The antenna height is varied from one meter to four meters above the ground to determine the maximum value of the field strength. Both horizontal and vertical polarizations of the antenna are set to make the measurement. m. For each suspected emission, the EUT was arranged to its worst case and then the antenna was tuned to heights from 1 meter to 4 meters (for the test frequency of below 30MHz, the antenna was tuned to heights 1 meter) and the rotatable table was turned from 0 degrees to 360 degrees to find the maximum reading. n. The test-receiver system was set to Peak Detect Function and Specified Bandwidth with Maximum Hold Mode. o. If the emission level of the EUT in peak mode was 10dB lower than the limit specified, then testing could be stopped and the peak values of the EUT would be reported. Otherwise the emissions that did not have 10dB margin would be re-tested one by one using peak, quasi-peak or average method as specified and then reported in a data sheet. p. Test the EUT in the lowest channel, the Highest channel q. The radiation measurements are performed in X, Y, Z axis positioning for Transmitting mode, and found the X axis positioning which it is the worst case. r. Repeat above procedures until all frequencies measured was complete.
Test Mode:	Transmitting mode with modulation
Test Results:	Pass

Remark: During the test, the Radiates Emission from 1GHz to 40GHz was performed in all modes, for 20MHz Occupied Bandwidth, MIMO 802.11 n(HT20) mode was the worst case; for 40MHz Occupied Bandwidth, MIMO 802.11 n(HT40) mode was the worst case; for 80MHz Occupied Bandwidth, MIMO 802.11 ac(VHT80) mode was the worst case; only the worst case was in the report.

For 2x2 MIMO:

Test Data:

Mode:	802.11 n(HT20) Transmitting	Channel:	5180MHz
Remark:	MIMO		

Test Graph

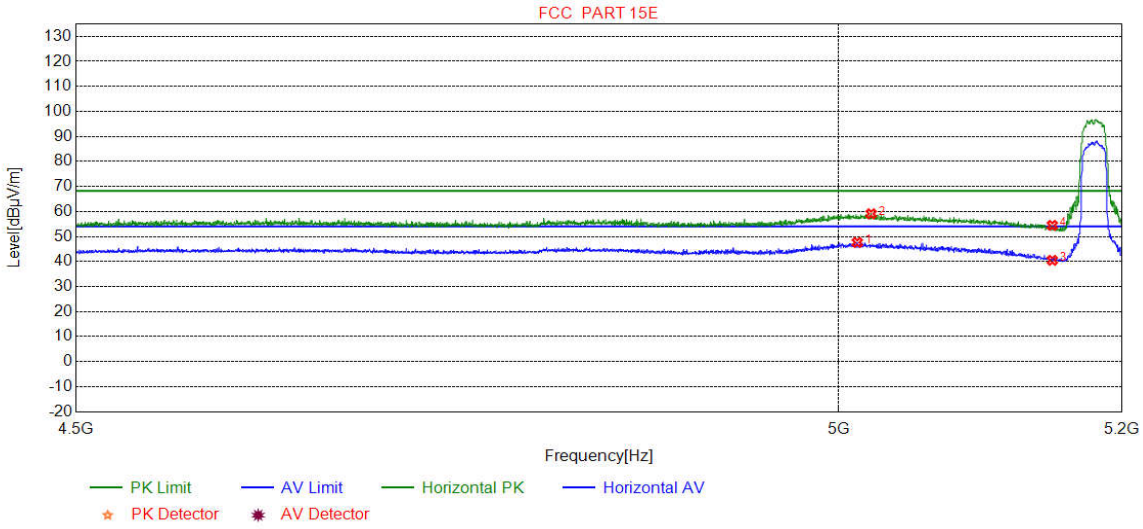

Suspected List											
NO	Freq. [MHz]	Ant Factor [dB]	Cable loss [dB]	Pream gain [dB]	Reading [dBµV]	Level [dBµV/m]	Limit [dBµV/m]	Margin [dB]	Result	Polarity	Remark
1	5013.0533	34.51	15.74	-42.79	40.16	47.62	54.00	6.38	Pass	Horizontal	AV
2	5022.6807	34.52	15.77	-42.79	51.59	59.09	68.20	9.11	Pass	Horizontal	Peak
3	5150.0000	34.65	15.08	-42.74	33.50	40.49	54.00	13.51	Pass	Horizontal	AV
4	5150.0000	34.65	15.08	-42.74	47.47	54.46	68.20	13.74	Pass	Horizontal	Peak

Mode:	802.11 n(HT20) Transmitting	Channel:	5180MHz
Remark:	MIMO		

Test Graph

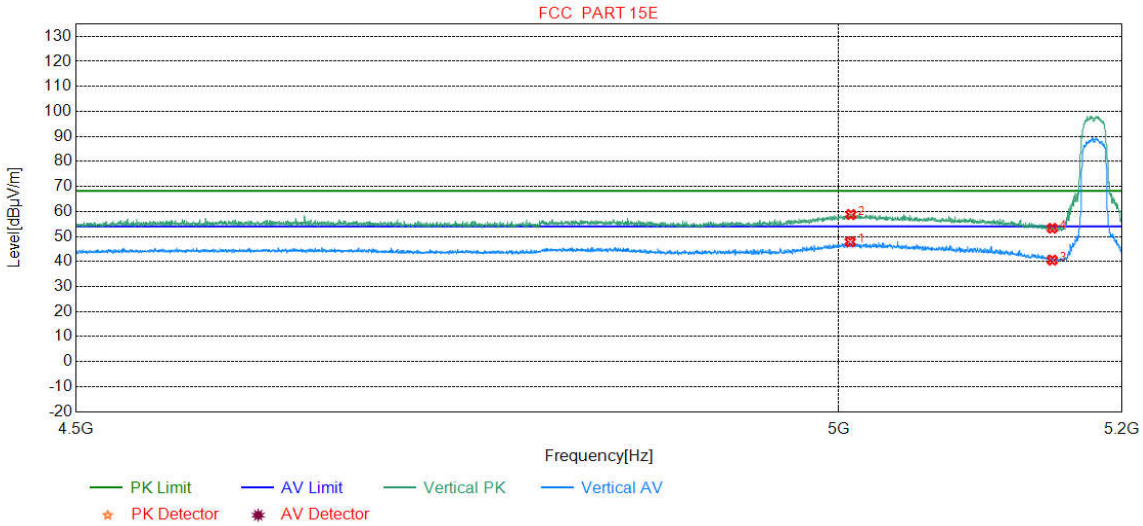

Suspected List											
NO	Freq. [MHz]	Ant Factor [dB]	Cable loss [dB]	Pream gain [dB]	Reading [dBμV]	Level [dBμV/m]	Limit [dBμV/m]	Margin [dB]	Result	Polarity	Remark
1	5008.1520	34.51	15.72	-42.80	40.45	47.88	54.00	6.12	Pass	Vertical	AV
2	5008.6772	34.51	15.72	-42.80	51.37	58.80	68.20	9.40	Pass	Vertical	Peak
3	5150.0000	34.65	15.08	-42.74	33.56	40.55	54.00	13.45	Pass	Vertical	AV
4	5150.0000	34.65	15.08	-42.74	46.30	53.29	68.20	14.91	Pass	Vertical	Peak

Mode:	802.11 n(HT40Mbps) Transmitting	Channel:	5190MHz
Remark:	MIMO		

Test Graph

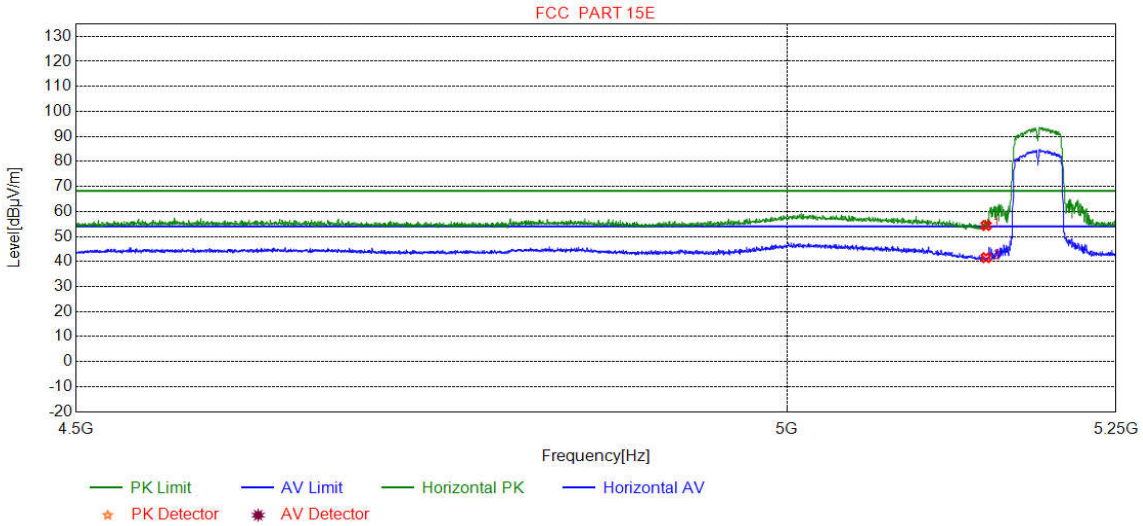

Suspected List											
NO	Freq. [MHz]	Ant Factor [dB]	Cable loss [dB]	Pream gain [dB]	Reading [dBμV]	Level [dBμV/m]	Limit [dBμV/m]	Margin [dB]	Result	Polarity	Remark
1	5150.0000	34.65	15.08	-42.74	47.41	54.40	68.20	13.80	Pass	Horizontal	Peak
2	5150.0000	34.65	15.08	-42.74	34.58	41.57	54.00	12.43	Pass	Horizontal	AV

Mode:	802.11 n(HT40Mbps) Transmitting	Channel:	5190MHz
Remark:	MIMO		

Test Graph

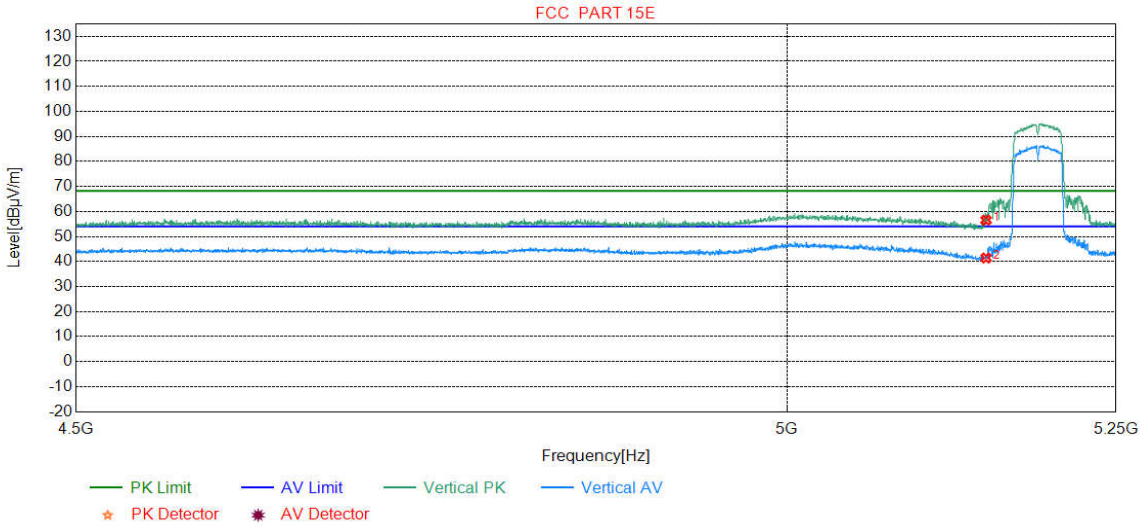

Suspected List											
NO	Freq. [MHz]	Ant Factor [dB]	Cable loss [dB]	Pream gain [dB]	Reading [dBµV]	Level [dBµV/m]	Limit [dBµV/m]	Margin [dB]	Result	Polarity	Remark
1	5150.0000	34.65	15.08	-42.74	49.55	56.54	68.20	11.66	Pass	Vertical	Peak
2	5150.0000	34.65	15.08	-42.74	34.42	41.41	54.00	12.59	Pass	Vertical	AV

Mode:	802.11 ac(VHT80) Transmitting	Channel:	5210MHz
Remark:	MIMO		

Test Graph

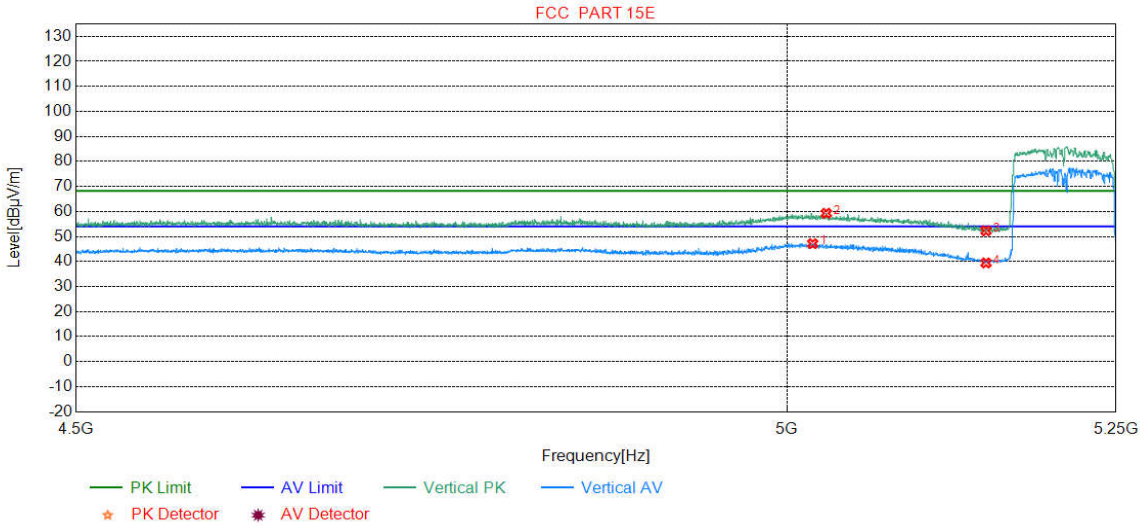

Suspected List											
NO	Freq. [MHz]	Ant Factor [dB]	Cable loss [dB]	Pream gain [dB]	Reading [dBµV]	Level [dBµV/m]	Limit [dBµV/m]	Margin [dB]	Result	Polarity	Remark
1	5019.3173	34.52	15.76	-42.79	39.66	47.15	54.00	6.85	Pass	Vertical	AV
2	5029.4449	34.53	15.80	-42.79	51.75	59.29	68.20	8.91	Pass	Vertical	Peak
3	5150.0000	34.65	15.08	-42.74	45.30	52.29	68.20	15.91	Pass	Vertical	Peak
4	5150.0000	34.65	15.08	-42.74	32.44	39.43	54.00	14.57	Pass	Vertical	AV

Mode:	802.11 n(HT20) Transmitting	Channel:	5240MHz
Remark:	MIMO		

Test Graph

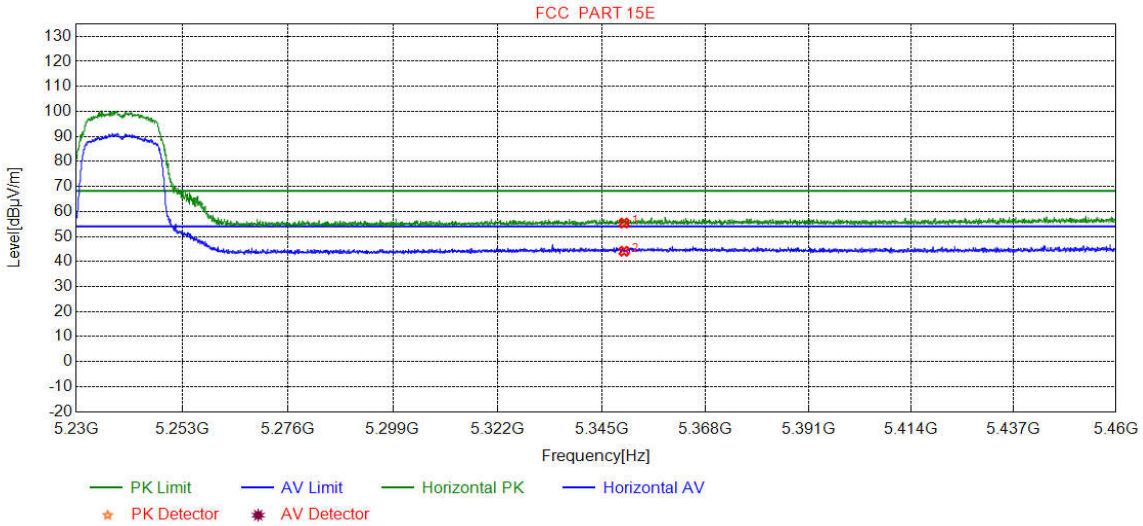

Suspected List											
NO	Freq. [MHz]	Ant Factor [dB]	Cable loss [dB]	Pream gain [dB]	Reading [dBµV]	Level [dBµV/m]	Limit [dBµV/m]	Margin [dB]	Result	Polarity	Remark
1	5350.0000	34.85	15.92	-42.66	47.26	55.37	68.20	12.83	Pass	Horizontal	Peak
2	5350.0000	34.85	15.92	-42.66	36.00	44.11	54.00	9.89	Pass	Horizontal	AV

Mode:	802.11 n(HT20) Transmitting	Channel:	5240MHz
Remark:	MIMO		

Test Graph

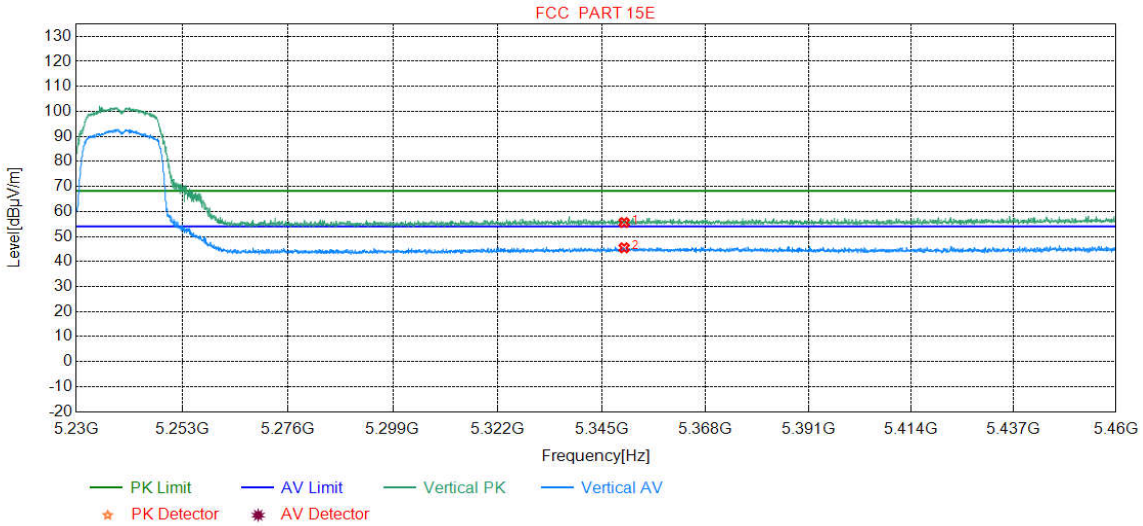

Suspected List											
NO	Freq. [MHz]	Ant Factor [dB]	Cable loss [dB]	Pream gain [dB]	Reading [dBμV]	Level [dBμV/m]	Limit [dBμV/m]	Margin [dB]	Result	Polarity	Remark
1	5350.0000	34.85	15.92	-42.66	47.48	55.59	68.20	12.61	Pass	Vertical	Peak
2	5350.0000	34.85	15.92	-42.66	37.37	45.48	54.00	8.52	Pass	Vertical	AV

Mode:	802.11 n(HT40) Transmitting	Channel:	5230MHz
Remark:	MIMO		

Test Graph

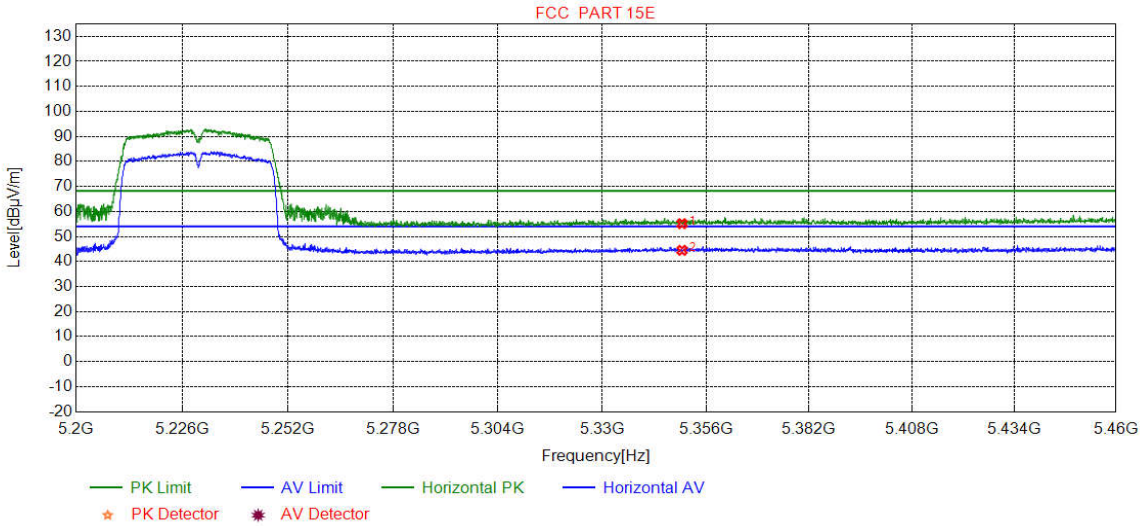

Suspected List											
NO	Freq. [MHz]	Ant Factor [dB]	Cable loss [dB]	Pream gain [dB]	Reading [dBµV]	Level [dBµV/m]	Limit [dBµV/m]	Margin [dB]	Result	Polarity	Remark
1	5350.0000	34.85	15.92	-42.66	47.01	55.12	68.20	13.08	Pass	Horizontal	Peak
2	5350.0000	34.85	15.92	-42.66	36.37	44.48	54.00	9.52	Pass	Horizontal	AV

Mode:	802.11 n(HT40) Transmitting	Channel:	5230MHz
Remark:	MIMO		

Test Graph

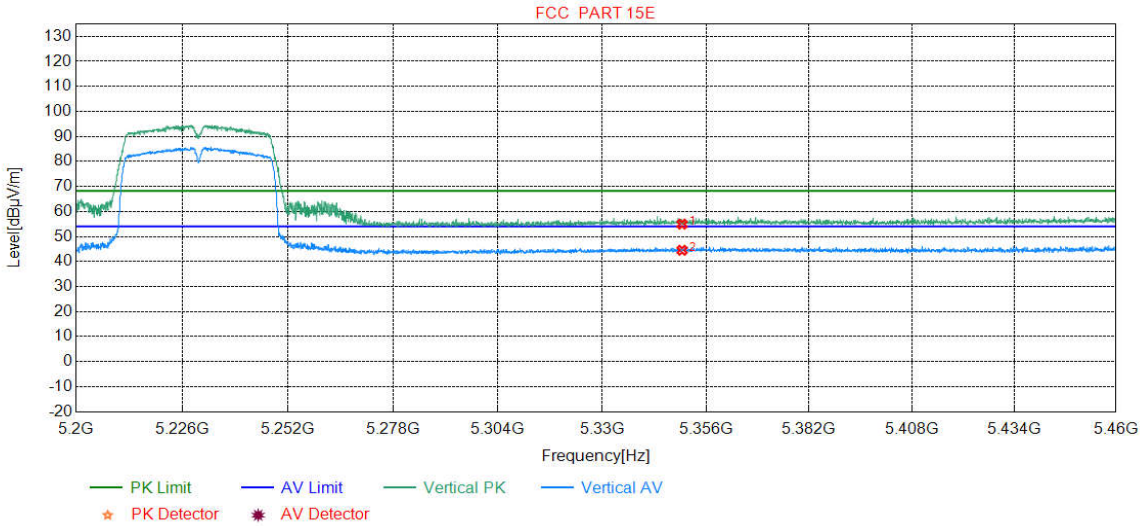

Suspected List											
NO	Freq. [MHz]	Ant Factor [dB]	Cable loss [dB]	Pream gain [dB]	Reading [dBµV]	Level [dBµV/m]	Limit [dBµV/m]	Margin [dB]	Result	Polarity	Remark
1	5350.0000	34.85	15.92	-42.66	46.83	54.94	68.20	13.26	Pass	Vertical	Peak
2	5350.0000	34.85	15.92	-42.66	36.39	44.50	54.00	9.50	Pass	Vertical	AV

Mode:	802.11 ac(VHT80) Transmitting	Channel:	5210MHz
Remark:	MIMO		

Test Graph

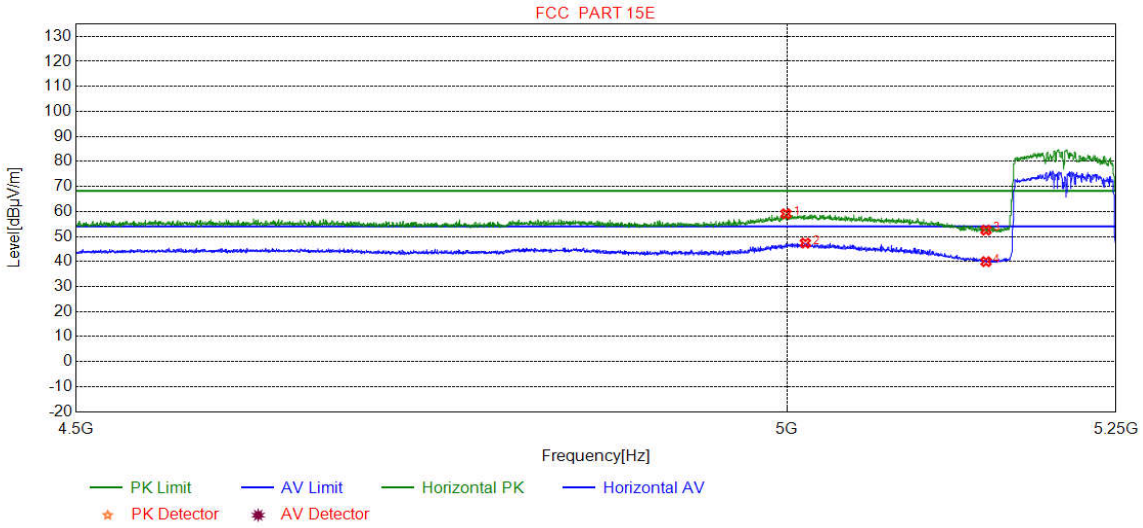

Suspected List											
NO	Freq. [MHz]	Ant Factor [dB]	Cable loss [dB]	Pream gain [dB]	Reading [dBμV]	Level [dBμV/m]	Limit [dBμV/m]	Margin [dB]	Result	Polarity	Remark
1	4999.4374	34.50	15.68	-42.80	51.70	59.08	68.20	9.12	Pass	Horizontal	Peak
2	5013.8785	34.51	15.74	-42.79	39.91	47.37	54.00	6.63	Pass	Horizontal	AV
3	5150.0000	34.65	15.08	-42.74	45.55	52.54	68.20	15.66	Pass	Horizontal	Peak
4	5150.0000	34.65	15.08	-42.74	32.96	39.95	54.00	14.05	Pass	Horizontal	AV

Note:
1) The field strength is calculated by adding the Antenna Factor, Cable Factor & Preamplifier. The basic equation with a sample calculation is as follows:
Final Test Level =Receiver Reading - Correct Factor
Correct Factor = Preamplifier Factor– Antenna Factor–Cable Factor
2) Scan from 1GHz to 25GHz, the disturbance above 13GHz was very low, and the above harmonics were the highest point could be found when testing, so only the above harmonics had been displayed. The amplitude of spurious emissions from the radiator which are attenuated more than 20dB below the limit need not be reported.

7 Appendix A

Refer to Appendix: 5G WIFI of EED32M80001604