Before Use

Transmitter

IN574-138-#

(#: 0 to 99)

Thank you for purchasing an SMC IN574-138-# SMC Transmitter.
Please read this manual carefully before operating the product and make sure you understand its capabilities and limitations. Please keep this manual handy for future reference.

To obtain the operation manual about this product and control unit, please refer to the SMC website (URL https://www.smcworld.com) or contact SMC directly.

Safety Instructions

These safety instructions are intended to prevent hazardous situations and/or equipment damage.
These instructions indicate the level of potential hazard with the labels of "Caution", " Warning" or "Danger". They are all important notes for safety and must be followed in addition to International standards (ISO/IEC) and other safety regulations.

⚠ **Danger:**	DANGER indicates a hazard with a high level of risk which, if not avoided, will result in death or serious injury.
⚠ **Warning:**	WARNING indicates a hazard with a medium level of risk which, if not avoided, could result in death or serious injury.
⚠ **Caution:**	CAUTION indicates a hazard with a low level of risk which, if not avoided, could result in minor or moderate injury.

Operator

- This operation manual is intended for those who have knowledge of machinery using pneumatic equipment, and have sufficient knowledge of assembly, operation and maintenance of such equipment. Only those persons are allowed to perform assembly, operation and maintenance can install this equipment.
- Read and understand this operation manual carefully before assembling, operating or providing maintenance to the product.

■Safety Instructions

⚠ Warning

■Do not disassemble, modify (including changing the printed circuit board) or repair.
An injury or failure can result.

■Do not operate or set with wet hands.
This may lead to an electric shock.

■Do not operate the product outside of the specifications.
Do not use for flammable or harmful fluids.
Fire, malfunction, or damage to the product can result.
Verify the specifications before use.

■Do not operate in an atmosphere containing flammable or explosive gases.
Fire or an explosion can result.
This product is not designed to be explosion proof.

■If using the product in an interlocking circuit:
•Provide a double interlocking system, for example a mechanical system.
•Check the product regularly for proper operation.
Otherwise malfunction can result, causing an accident.

■The following instructions must be followed during maintenance:
•Turn off the power supply.
•Stop the air supply, exhaust the residual pressure and verify that the air is released before performing maintenance.
Otherwise an injury can result.

⚠ Caution

■When handling the unit or assembling/replacing units:
•Do not touch the sharp metal parts of the connector or plug for connecting units.
•Take care not to hit your hand when disassembling the unit.
The connecting portions of the unit are firmly joined with seals.
•When joining units, take care not to get fingers caught between units.
An injury can result.

■After maintenance is complete, perform appropriate functional inspections.
Stop operation if the equipment does not function properly.
Safety cannot be assured in the case of unexpected malfunction.

■Provide grounding to assure noise resistance of the product.
Individual grounding should be provided close to the product with a short cable.

⚠ Caution

Notice:
Changes or modifications not expressly approved by the manufacturer could void the user's authority to operate the equipment.

NOTE:
FCC Warning
This equipment has been tested and found to comply with Part 18 of the FCC Rules.
Refer to FCC Part 18.213(c) and KDB 784748 APPENDIX A section A.5:
These limits are designed to provide reasonable protection against harmful interference in an industrial installation.This equipment generates, uses and can radiate radio frequency energy and, if not installed and used in accordance with the instructions, may cause harmful interference to radio communications.However, there is no guarantee that interference will not occur in a particular installation.If this equipment does cause harmful interference to radio or television reception, which can be determined by turning the equipment off and on, the user is encouraged to try to correct the interference by one or more of the following measures:
•Reorient or relocate the receiving antenna.
•ncrease the separation between the equipment and receiver.
•Connect the equipment into an outlet on a circuit different from that to which the receiver is connected.
•Consult the technician or professional installer for help.
FCC Caution
This equipment complies with FCC radiation exposure limits set forth for an uncontrolled environment and meets the FCC radio frequency (RF) EXposure Guidelines.
The minimum distance from PTXMP to human body to avoid RF exposure for safety is 20cm.

■NOTE

- The power is supplied from the circuit reinforced or double-insulated from MAINS.
- The direct current power supply used should be UL approved as follows. UL1310 Class 2 power supply unit and Power cable for CL2 cable type.
- All external circuits should also be connected to a circuit that is reinforced or double-insulated from the MAINS and free from risk of electric shock and fire hazard.
- If the equipment is used in a manner not specified by the manufacturer, the protection provided by the equipment may be impaired.

『Limited warranty and Disclaimer』

1. The warranty period of the product is 1 year in service or 1.5 years after the product is delivered, whichever is first.
   Also, the product may have specified durability, running distance or replacement parts. Please consult your nearest sales branch.
2. For any failure or damage reported within the warranty period which is clearly our responsibility, a replacement product or necessary parts will be provided.
   This limited warranty applies only to our product independently, and not to any other damage incurred due to the failure of the product.
3. Prior to using SMC products, please read and understand the warranty terms and disclaimers noted in the specified catalog for the particular products.

<Important>
- The wireless product is certified as wireless equipment in accordance with the Radio Act and the certification of construction type has been obtained. Customers do not need to apply for a license to use this equipment.
  Be sure to comply with the following precautions.
  •Do not disassemble or modify the product. Disassembly and modification are prohibited by law.
  •This product is compliant with the Radio Act in Japan and North America.
  For use in other countries, please consult SMC. For the latest information, refer to the catalog on the website below.
  URL https://www.smcworld.com
- This product communicates using radio waves, and the communication may be temporarily interrupted due to the ambient environments and operating methods. SMC will not be responsible for any secondary failure which may cause an accident or cause damage to other devices or equipment.
- When several units are installed close to each other, slight interference may occur due to the characteristics of the wireless product.
- Radio waves emitted by this product may adversely affect implantable medical devices such as implantable cardiac pacemakers and brillators.
  For precautions regarding the use of equipment or devices that may adversely affect performance, refer to the catalog or instruction manuals for the equipment or devices, or contact the manufacturers directly.
- The communication performance is affected by the ambient environment, so please perform communication testing before use.

<Others Precautions>
- During operation, the temperature of the backside metal part increases. Short-term skin contact will not cause immediate burns, but please be careful when handling during operation or immediately after stopping.

Summary of Product elements

IN574-138-#

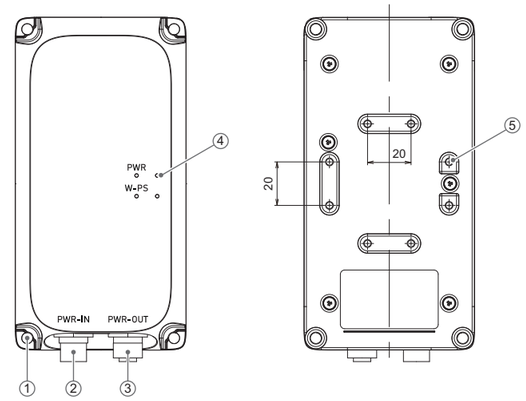

Top View　　Bottom View

No.	Name	Application
1	Screw hole for mounting (4 x ø5)	Mounting the Transmitter.
2	Power connector	Power suply cable connection.
3	Power connector	Power suply cable connection.
4	LED	Indicates the status of the Transmitter.
5	Screw hole for mounting (8 x M3)	Mounting for Transmitter.

Mounting and Installation

■Installation

- To avoid damage to parts, apply the recommended tightening torque.
- Mount the product using 4 screws.
  4 x M5 screws are required. Legth 12 mm more. (Recommended torque = 3.0±0.3 N•m).
  8 x M3 screws : Effective Screw length except attached object thickness: 4 to 5 mm.

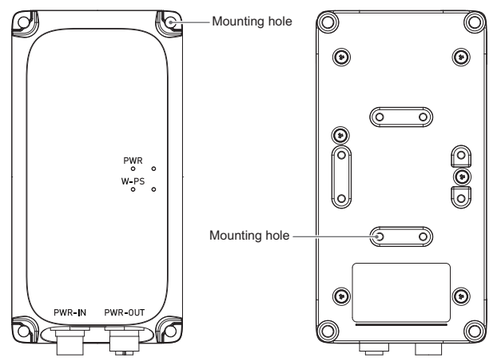

Top View　　Bottom View

■Connector

•Power in Connector

No.	Signal	M12,4-pin, plug, A-coded
1	24 V	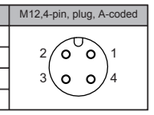
2	N.C.	
3	0 V	
4	N.C.	

•Power out Connector

No.	Signal	M12,5-pin, socket, A-coded
1	24 V	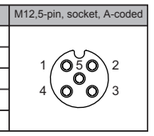
2	Tx	
3	0 V	
4	Rx	
5	N.C.	

LED Display

The LED indicators the Transmitter indicate the power supply, communication and diagnostic status.

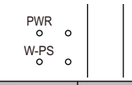

LED name	LED status	Description
PWR	OFF	Power OFF
	Green LED is ON	Power ON
	Red LED is ON	Error in power circuit
W-PS	OFF	Tx Power OFF
	Green LED is ON	Tx Power ON
	Red LED is ON	Error in Tx power

Environment

Item	Details
Operating temperature	-10 to 60 °C (No condensation or freezing)
Ambient humidity	35 to 85%RH
Altitude	Up to 3000 m
Power supply voltage range	24V DC ±10%
Current Consumption	300 mA
IP rating	IP67
Installation place	Indoor

Maintenance

- Maintenance should be performed according to the Safety Instructions.
- Perform regular maintenance and inspections.
  There is a risk of unexpected malfunction.
- Do not use solvents such as benzene, thinner etc. to clean each unit.
  They could damage the surface of the body and erase the markings on the body.
  Use a soft cloth to remove stains.
  For heavy stains, use a cloth soaked with diluted neutral detergent and fully squeezed, then wipe up the stains again with a dry cloth.

Refer to the SMC website (URL https://www.smcworld.com) to obtain more detailed information about maintenance.

Troubleshooting

Refer to the LED Display. Refer to the SMC website (URL https://www.smcworld.com) to obtain more detailed information about troubleshooting.

Specification

Remote can be used regardless of the communication specification of the Base.

Refer to the product catalog or SMC website (URL https://www.smcworld.com) to obtain more detailed information about product specifications.

Diagnostic

Refer to the SMC website (URL https://www.smcworld.com) to obtain more detailed information about diagnostic.

Outline with Dimensions

Refer to the product catalog or SMC website (URL https://www.smcworld.com) to obtain more detailed information about outline dimensions.

SMC Corporation　URL https://www.smcworld.com
Akihabara UDX 15F, 4-14-1, Sotokanda, Chiyoda-ku, Tokyo 101-0021, JAPAN
Phone: +81 3-5207-8249　Fax: +81 3-5298-5362

Note: Specifications are subject to change without prior notice and any obligation on the part of the manufacturer.
© SMC Corporation All Rights Reserved.

DOC1096693