padmate® 派美特
for better

# User Manual-PaMu Scroll

PaMu Scroll TWS Bluetooth Earphones

**Tips**

●Bluetooth Signal is easily interferred in the following environment.
1. Compact environment with multiple Wi-Fi signals and Bluetooth Signals.
2. Airport, railway, metro where electromagnetic interference is strong.

●Right earbud is master earbud. When using the earbuds, it would guarantee more stable connection if the paired device is near the Right earbud.

●Current bluetooth technology cannot guarantee synchronization of gaming and video playing.

Made in China

PaMu Scroll TWS Bluetooth Earphones

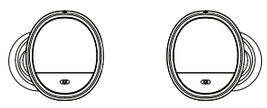

Standard Edition

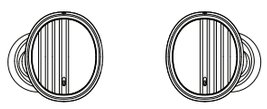

Glory Edition

FCC ID:2AJEO-T3

## Power on、pair (Step 1)

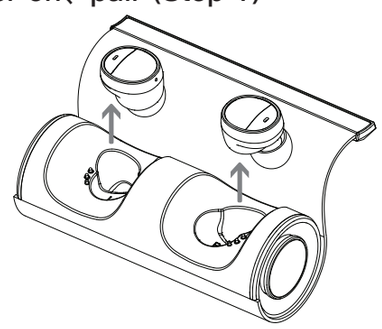

Power on:The left and the right headsets will automatically power on after taking out from the charging case and will turn on pairing mode.

## Power on、pair (Step 2)

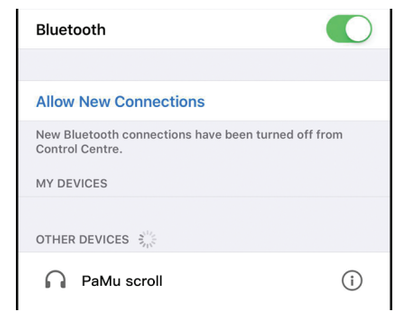


Turn on your mobile Bluetooth setting. Search "PaMu Scroll" and connect.

## Wearing

Wearing manner for left headset

Wearing manner for right headset

The microphone hole is facing down and adjusted to a comfortable angle to wear.

## Touch Button Operation

| Touch Button | | Touch Button | |
|---|---|---|---|
| Play/Pause | One Click | Play/Pause | One Click |
| Activate Siri | Double Click | Track Forward | Double Click |
| Answer Phone Call | One Click (Call mode) | Answer Phone Call | One Click (Call mode) |
| Decline Phone Call | Double Click (Call mode) | Decline Phone Call | Double Click (Call mode) |

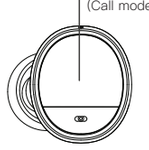

Left Ear

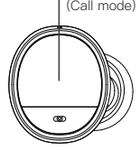

Right Ear

## Power Off/ Charging

About **3.5** hours

Battery Duration Time

**2** times

full-charged cradle charging for headsets

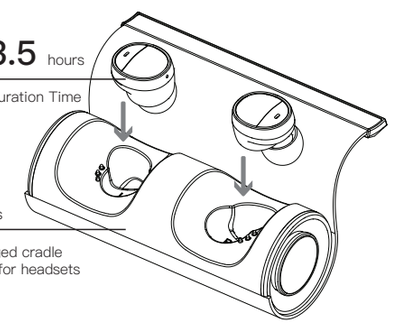

Put earbuds back to charging case for powering off and recharging.
( Red lights flash while charging. Lights off after full charging.)

## Wireless Charging

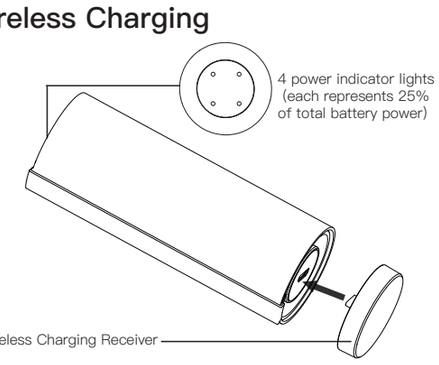


(Wireless Charging Receiver can be purchased as optional accessories)

## Warning and Declarations

**AUDIO PRODUCT WARNING!**

PERMANENT HEARING LOSS MAY RESULT FROM long-term EXPOSURE TO SOUNDS AT HIGH VOLUMES. USE AS LOW A VOLUME AS POSSIBLE.
Avoid prolonged use of headsets at excessive sound pressure levels.
Please read the Safety Guidelines below prior to using this product.

**You can reduce the risk of hearing damage by following these safety guidelines:**

**1. Prior to using this product follow these steps**

- Before using the product, turn the volume control to its lowest level,
- Put the headset on, if applicable
- Slowly adjust the volume control to a comfortable level.

**2. During the use of this product**

- Keep the volume at the lowest level possible;
- If increased volume is necessary, adjust the volume control slowly;
- If you experience discomfort or ringing in your ears, immediately discontinue using the product.

With continued use at high volume, your ears may become accustomed to the sound level, which may result in permanent damage to your hearing without any noticeable discomfort.

**GENERAL SAFETY INFORMATION!**

- If you have a pacemaker or other electrical medical devices, consult your physician before using this product.
- This package contains small parts that may be hazardous to children. Always store the product out of reach from children. The bags themselves or the many small parts they contain may cause choking if ingested.
- Don't disassemble the product yourself or insert any type of object into it, as this may cause a circuit failure that can lead to a fire.
- None of the components can be replaced or repaired by users. Only authorized dealers or service centers may open the product. If any parts of your product require replacement for any reason, including normal wear and tear or breakage, contact your dealer or service centers.
- Avoid exposing your product to rain or other liquids.
- Keep all products, cords, and cables away from operating machinery.
- Observe all signs and instructions that require an electrical device or RF radio product to be switched off in designated areas such as hospitals or aircrafts.
- If the product overheats, has been dropped or damaged or has been dropped in a liquid, discontinue use.

**Remember:** Always drive safely, avoid distractions and follow local laws!

The use of a speaker while operating a motor vehicle may be regulated by local laws. Using a headset while operating a motor vehicle, motorcycle, watercraft or bicycle may be dangerous,and is illegal in some jurisdictions, just as use of this headset with both ears covered while driv-ing is not permitted in certain jurisdictions. Check with your local authorities.

**BUILT-IN BATTERY CARE:** Please observe the following if the product contains a battery

- Your product is powered by a rechargeable battery. The full performance of a new battery is achieved only after two or three complete charge and discharge cycles.
- The battery can be charged and discharged hundreds of times, but will eventually wear out. Do not leave a fully charged battery connected to a charger, since overcharging may shorten its lifetime.
- If left unused, a fully charged battery will lose its charge over time.
- Leaving the product in hot or cold places will reduce the capacity and lifetime of the battery.Always try to keep the battery between 15℃ and 25℃(59°F and 77°F). A product with a hot or cold battery may not work temporarily, even when the battery is fully charged.

**Battery warning**

- "Caution"-the battery used in this product may present a risk of fire or chemical burn if mistreated. Batteries may explode if damaged.
- Only recharge your battery with the provided approved chargers designated for this product.
- Dispose of batteries according to local regulations. Please recycle when possible. Do not dispose as household waste or in a fire as they may explode.
- Unless otherwise specified in the user manual or quick start guide the battery in your product can not be removed or replaced by the user. Any attempt to do so is risky and may result in damage of the product.

**Important:** Please refer to the user manual for a description of the charging status indicator lights. Some products cannot be used while charging.

**Charger warning** !

- Do not use a wall charger with more than 5V and 2A output.
- When you disconnect the power cord or any enhancement, grasp and pull the plug, not the cord. Never use a charger that is damaged.
- Do not attempt to disassemble the charger as it may expose you to dangerous electric shock.

**MAINTENANCE**

- Unplug the product or charger before cleaning.
- Clean the product by wiping with a dry or slightly damp cloth. The cord and charger may only be dry-dusted.

**FCC WARNING:**

Any Changes expressly or modifications not approved by the party responsible for compliance could void the user's authority to operate the equipment.

This device complies with part 15 of the FCC Rules. Operation is subject to the following two conditions:

(1) This device may not cause harmful interference,and (2) this device must accept any interference received, including interference that may cause undesired operation.

Note: This equipment has been tested and found to comply with the limits for a Class B digital device,

pursuant to part 15 of the FCC Rules. These limits are designed to provide reasonable protection against harmful interference in a residential installation. This equipment generates, uses and can radiate radio frequency energy and, if not installed and used in accordance with the instructions, may cause harmful interference to radio communications. However, there is no guarantee that interference will not occur in a particular installation. If this equipment does cause harmful interference to radio or television reception, which can be determined by turning the equipment off and on, the user is encouraged to try to correct the interference by one or more of the following measures:

—Reorient or relocate the receiving antenna.

—Increase the separation between the equipment and receiver.

—Connect the equipment into an outlet on a circuit different from that to which the receiver is connected.

—Consult the dealer or an experienced radio/TV technician for help.

FCC Radiation Exposure Statement:

This equipment complies with FCC radiation exposure limits set forth for an uncontrolled environment .

This transmitter must not be co'located or operating in conjunction with any other antenna or transmitter.

padmate®

**Padmate Warranty Card**

( Please keep this card as proof)

Customer Name: _____

Gender: _____

Address: _____

Phone No.: _____

Product Model: _____

Product Series No.: _____

Date of Purchase: _____

Purchase Stamp : _____

E-mail : _____

**Notice:**

1. Please fill out the form above with purchase stamp for the procedure of warranty.
2. Any change on warranty card and invoice will result in invalidation.
3. Please keep warranty card and invoice as the proof of warranty for the product. No replacement for warranty card or invoice.
4. This warranty is valid within 1 year from the date of purchase.