Unictron Technologies Corp.

XOSS-HW Test Report

Customer Name: Da Bu Zi Duo
Product type: Aiot
Engineer: Joy Zhu
Telephone: 15986652626
Email: gqzhu@unictron.com
Approval: Joy Zhu
Date: April 25, 2025

Unictron Technologies Corp.

Report Contents

- 测试条件 Test conditions
- 天线&样机外观 Antenna & Prototype appearance
- 天线S参数 Antenna S parameters
- 天线无源效率 Passive antenna efficiency
- 3D辐射场型 3D radiation field type
- 2D辐射场型 2D radiation field type

test condition

test item	test instrument	manufacturer
parameter	E5062A	Agilent
workpiece ratio	E5071C/RayZone 1800	Keysight/GTS

Unictron Technologies Corp.

Appearance of the prototype

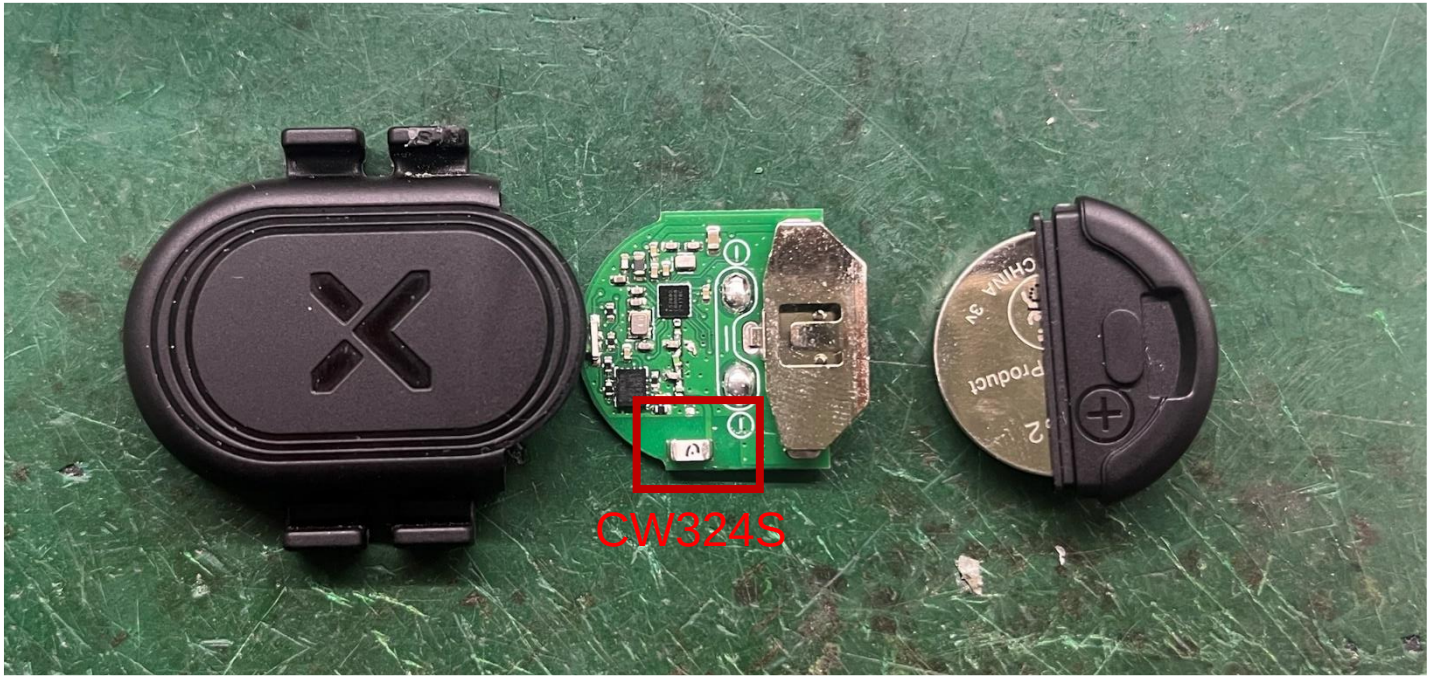

antenna parameter

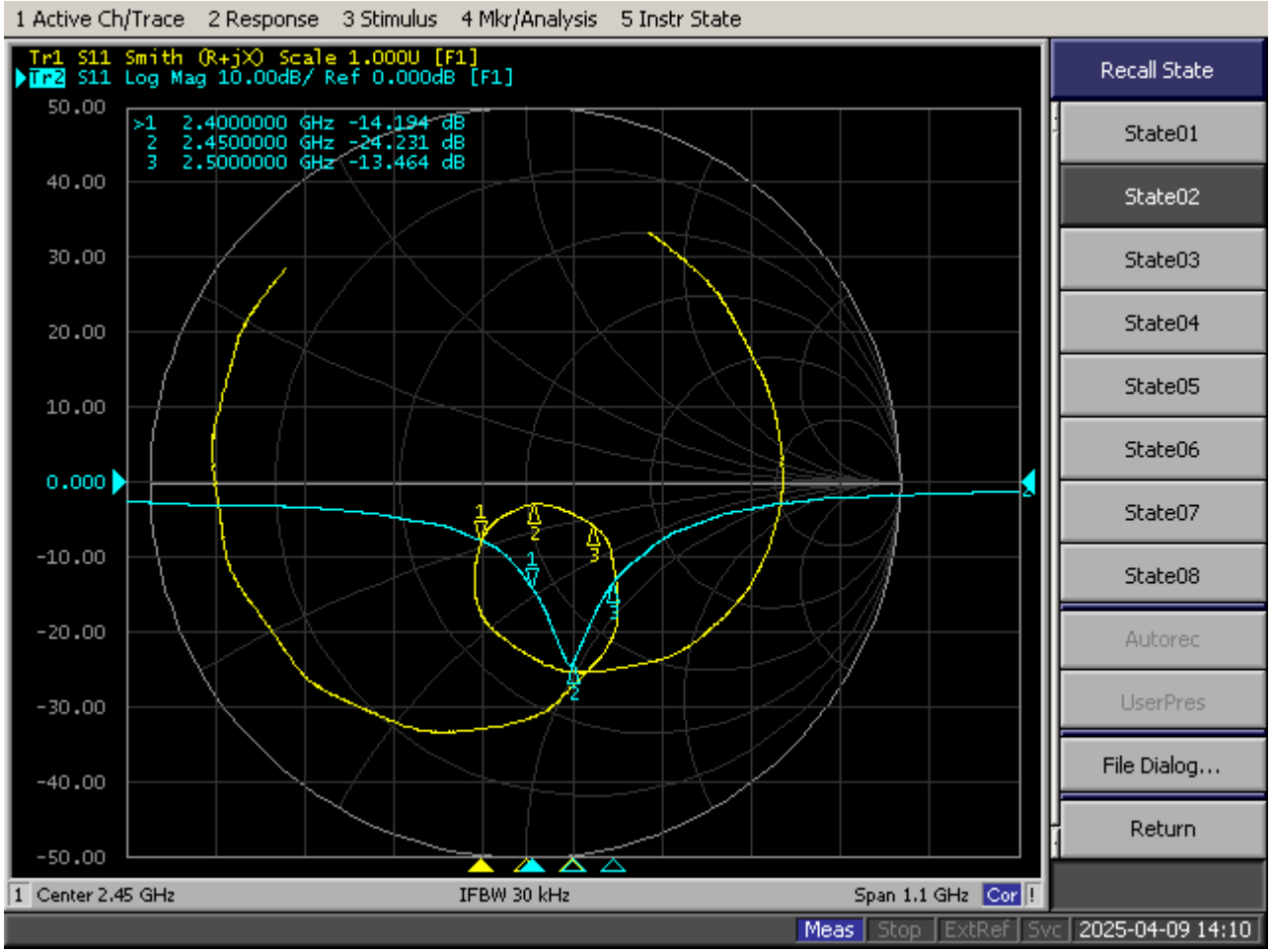

matching parameter

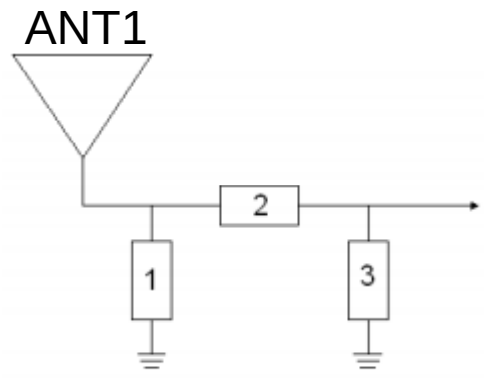

		厂商	公差	
ANT1	CW324S	咏业		
1	NC			
2	L=1.2nH/0402	村田	±0.1nH	
3	L=1.0nH/0402	村田	±0.1nH	

Unictron Technologies Corp.

Passive efficiency of the antenna

Freq(MHz)	Gain(dBi)	Efficiency(dB)	Efficiency(%)
2400	-4.26	-8.71	13.45
2410	-4.11	-8.47	14.22
2420	-3.92	-8.18	15.22
2430	-3.72	-7.97	15.96
2440	-3.51	-7.77	16.69
2450	-3.38	-7.57	17.48
2460	-3.28	-7.35	18.41
2470	-3.14	-7.10	19.48
2480	-3.17	-7.27	18.77
2490	-3.24	-7.42	18.11
2500	-3.33	-7.67	17.10

3D radiation field type

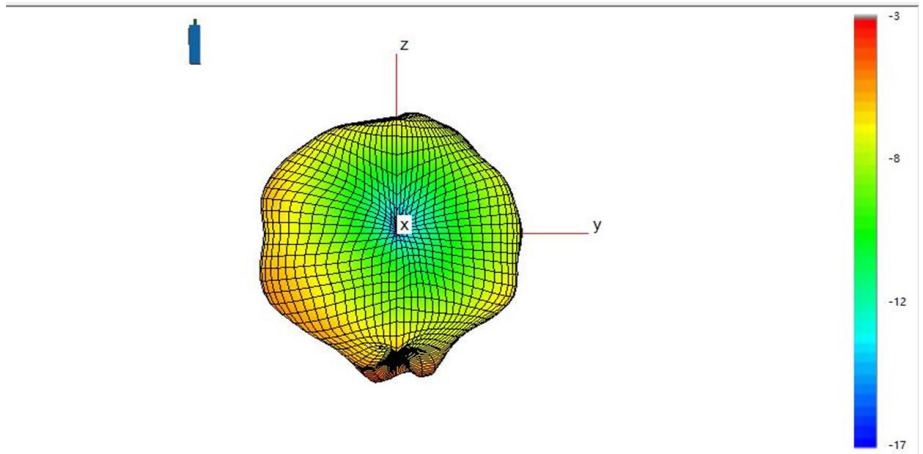

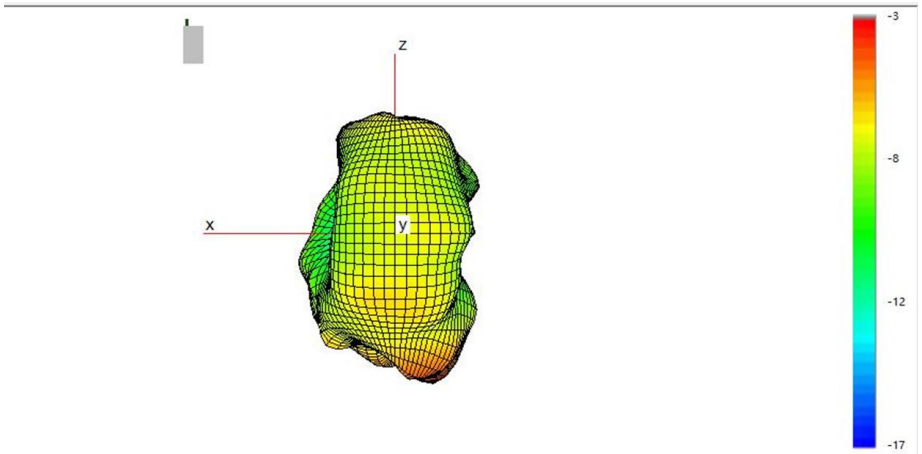

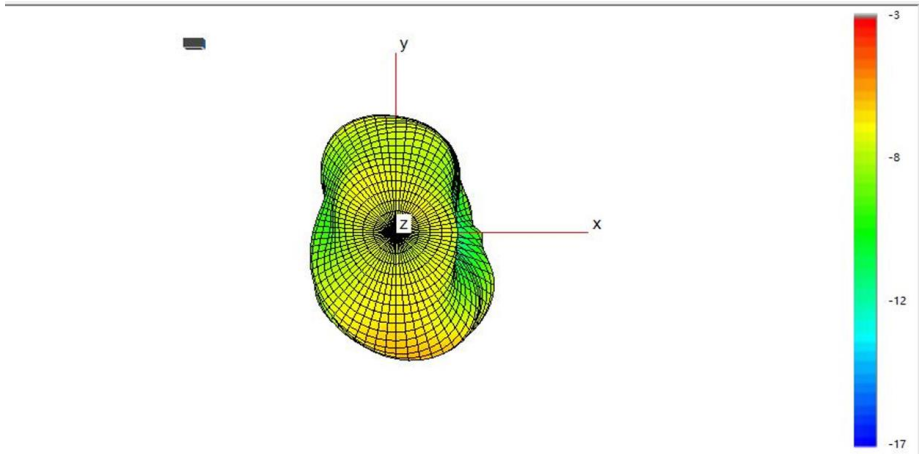

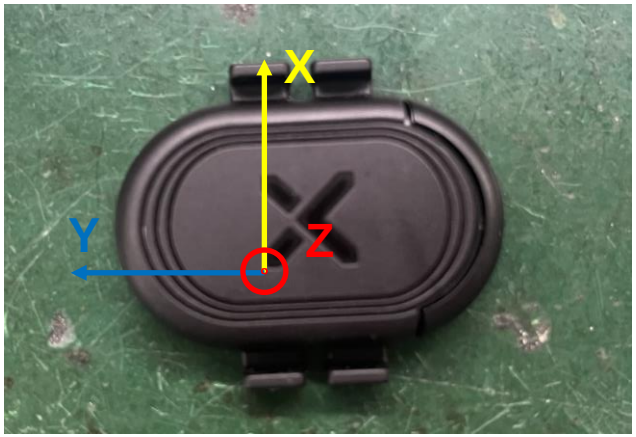

2D radiation field type

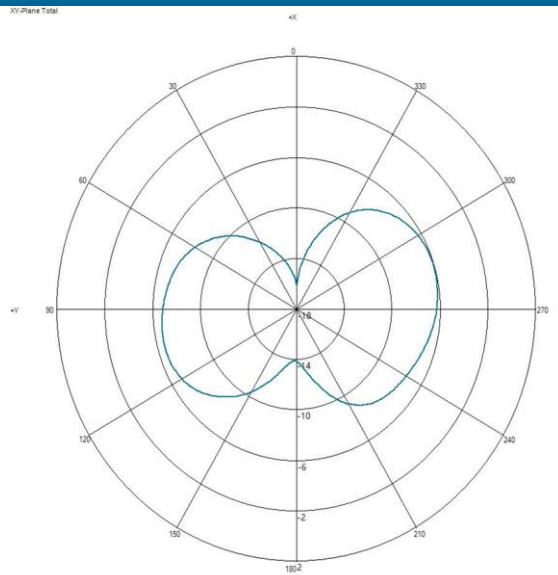

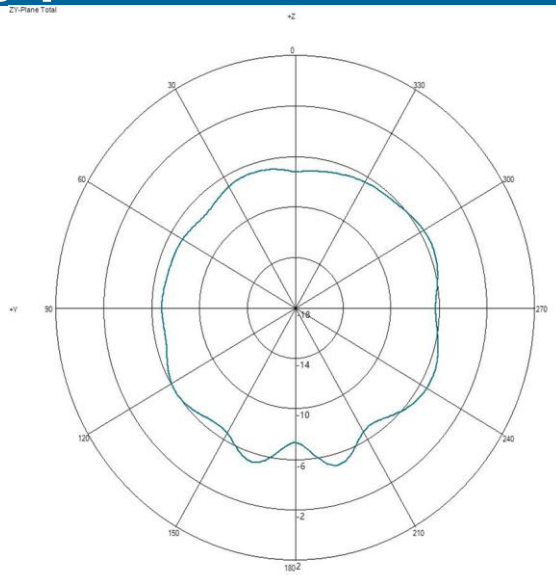

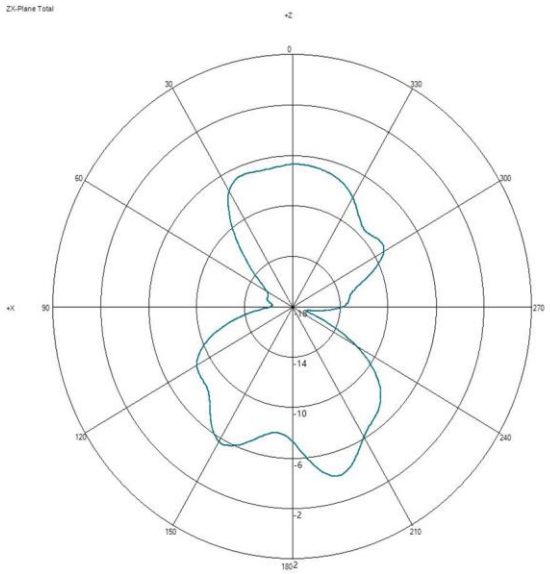

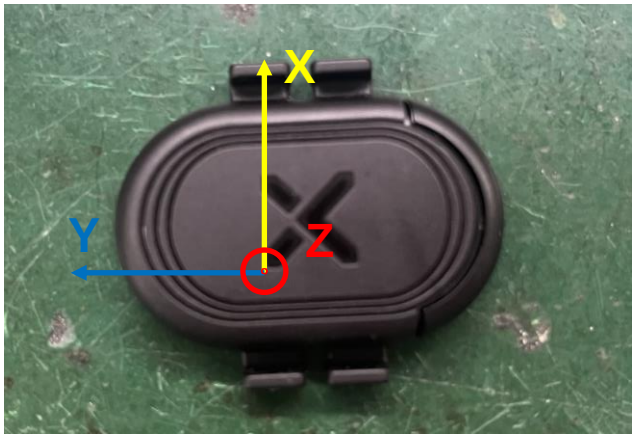

Unictron Technologies Corp.

Thanks for Your Attention