CSR Bluetooth Modules

MBC005

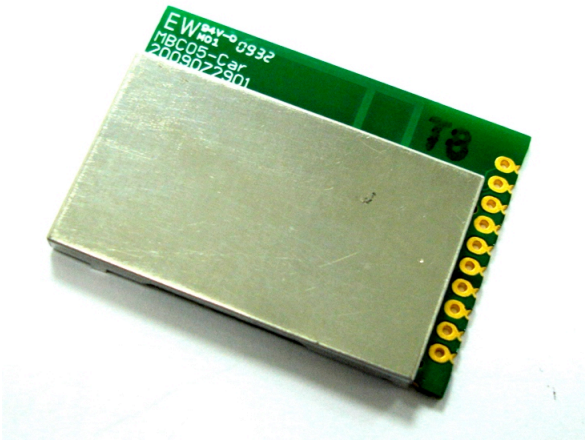

Specification
Version 1.1
05-Aug.-2016

Product No.: MBC005
Product Description:
Bluetooth v3.0 Class 2 BT Stereo Module
Issue Date: 2016/08/05
Release Version: 1.1

20F-8, No.107, Sec. 1, Jhongshan Rd.,
Shinjhuang City, Taipei County 242, Taiwan
TEL: +886-2-8522-7628 FAX: +886-2-8522-7784

Documentation History

Revision	Description	Date	Remark
V0.1	MBC005	Aug 2009	
V1.0	MBC005	Jan 2012	
V1.1	MBC005 with SPP profile	Jan 2015	

20F-8, No.107, Sec. 1, Jhongshan Rd.,
Shinjhuang City, Taipei County 242, Taiwan
TEL: +886-2-8522-7628 FAX: +886-2-8522-7784

Content

Features 4
Hardware & Technical Information 5
Mechanical Specification 6
Reference Schematic 6
Electrical Characteristics 7
Software specification 9
Ordering Code 10

20F-8, No.107, Sec. 1, Jhongshan Rd.,
Shinjhuang City, Taipei County 242, Taiwan
TEL: +886-2-8522-7628 FAX: +886-2-8522-7784

Features

CSR BlueCore05 Chip.
Bluetooth v3.0 Compliant.
Bluetooth Class2 RF. Up to 10 meters transmission distance.
Supported A2DP, HFP, AVRCP, PBAP(Phone Book Access Profile),SPP and Easy pairing.
Fully configurable with simple AT style commands over UART and Bluetooth connections.
On board printing antenna and external antenna versions.
Support Single End Audio output.
Dimension: 35X25X2.7mm.
Castellated SMT pads or 10 PIN pitch 2.0mm connector easy and reliable PCB mounting.

Description

MBC005-CAR-AT audio transmitter/Receiver is power by CSR BC05 technology. That provides a complete 2.4GHz
Bluetooth technology for stereo music transmission. The MBC005-CAR-AT module is compliant with Bluetooth specification v3.0 and support A2DP, AVRCP, HFP, SPP and PBAP(Phone Book Access Profile). It is the class 2 module with build in antenna. Reduce the effort on the RF section when the engineer designs it into the system. SmartDesign also customize the software to meet the requirement from customer.

Block Diagram

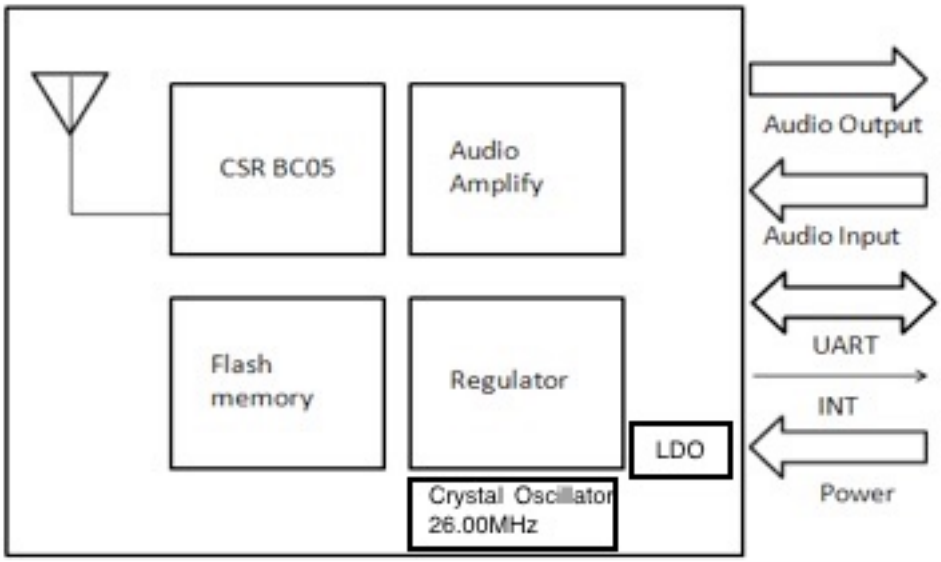

MBC005 Class2 Module Block Diagram

20F-8, No.107, Sec. 1, Jhongshan Rd.,
Shinjhuang City, Taipei County 242, Taiwan
TEL: +886-2-8522-7628 FAX: +886-2-8522-7784

Hardware & Technical Information

Pin Definition

PIN	Name	Type	Note
1	R_SPK	O	Right side audio out put
2	L_SPK	O	Left side side audio output
3	SPK_GND	O	Ground for speaker
4	MIC+	I	Microphone +
5	MIC-	I	Microphone -
6	VCC	PWR	Power input
7	GND	PWR	Ground
8	TX	O	UART TX
9	RX	I	UART RX
10	INT	O	Interrupt
11	GND	PWR	Ground
12	GND	PWR	Ground
13	GND	PWR	Ground

VCC

Supply voltage at this pin with 5 V.

GND

Connect GND pins to the ground plane of the PCB.

RX

RX is used to implement UART data transfer from another device to MBC005-CAR-AT. The UART interface requires an external RS232 transceiver chip. TTL level.

TX

TX is used to implement UART data transfer from MBC005-CAR-AT to another device. TTL level.

L_SPK

Left channel audio output. The audio output line is the single-ended. Use low impedance ground plane dedicated for the audio signals.

R_SPK

Right channel audio output. The audio output line is the single-ended. Use low impedance ground plane dedicated for the audio signals

SPK_GND

Audio ground. Connect to right and left Audio line.

MIC+ and MIC-

Audio inputs. This audio input can be configured to microphone or line input. Route differential pairs close to each other and use a solid dedicated audio ground plane for the audio signals.

INT

Interrupt output. Normally keep in “Low”. Change to “High” when Audio output.

Mechanical Specification

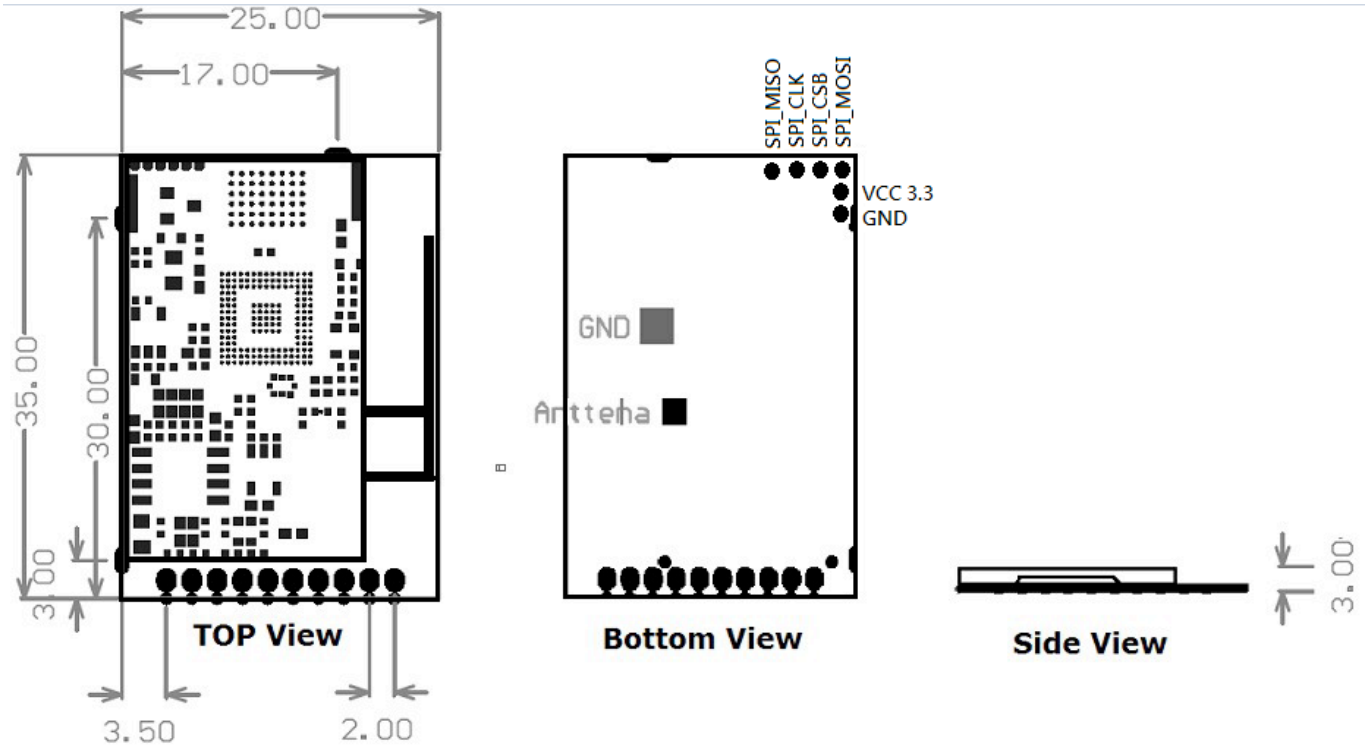

10 PINs Pitch 2.0 unit: mm

MBC005 CLASS2 Mechanical Specification

Reference Schematic

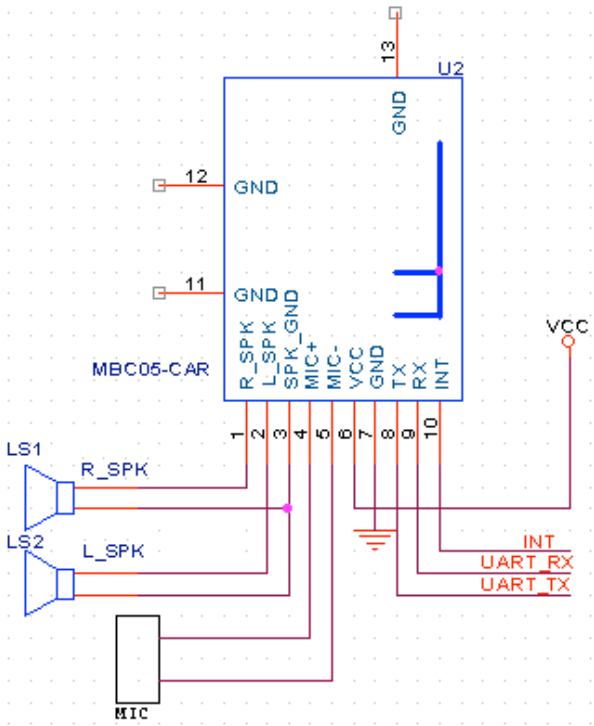

Electrical Characteristics

■ Voltage Input

	MIN	Typ.	MAX	Unit
Supply Voltage	3.5	5	5.3	V

■ Power Consumption

Mode	Avg.
Standby	10mA
HFP	26mA
A2DP	39mA
Link	11mA

■ Operating Conditions

Voltage Range	3.5-5.3V
Operating Temperature Range	-20°C ~ 70°C
Storage Temperature Range	-30°C ~ 80°C
Relative Humidity (Operating)	<=90%
Relative Humidity (Storage)	<=90%

20F-8, No.107, Sec. 1, Jhongshan Rd.,
Shinjhuang City, Taipei County 242, Taiwan
TEL: +886-2-8522-7628 FAX: +886-2-8522-7784

Radio Characteristics

	Frequency (GHz)	MIN	TYP	MAX	BT Spec	Unit
Sensitivity at 0.1%BER	2.402	≤-84	-80	-	<= -70	dBm
	2.441	≤-84	-80	-		dBm
	2.480	≤-84	-80	-		dBm
RF Transmit Power	2.402	-2	0	4	<= 4	dBm
	2.441	-2	0	4		dBm
	2.480	-2	0	4		dBm
Initial Carrier Frequency Tolerance	2.402	-	5	75	75	kHz
	2.441	-	5	75		kHz
	2.480	-	5	75		kHz
20dB bandwidth for modulated carrier		-	900	1000	<=1000	kHz
Drift (Five slots packet)		-	15	-	40	kHz
Drift Rate		-	13	-	20	kHz
$\Delta f1_{avg}$ "Maximum Modulation"	2.402	140	165	175	140 < $\Delta f1_{avg}$	kHz
	2.441	140	165	175		kHz
	2.480	140	165	175		kHz
$\Delta f2_{max}$ "Minimum Modulation"	2.402	115	190	-	115	kHz
	2.441	115	190	-		kHz
	2.480	115	190	-		kHz

20F-8, No.107, Sec. 1, Jhongshan Rd.,
Shinjhuang City, Taipei County 242, Taiwan
TEL: +886-2-8522-7628 FAX: +886-2-8522-7784

Software specification

Profile

Model name \ Profile	MBC005-AT2
Control	AT command
Flash Memory	16 MB
Command Manual	A2DP_AT_Commands_v2.0d
A2DP	**V**
HFP	**V**
AVRCP	**V**
PBAP	**V**
SPP	**V**

Software function

MBC005-CAR-AT will act only when you send AT command. Detailed AT command, please check the document.

Default setting Information

	Parameter	Value
1	Baud Rate	9600
2	Pin Code Prompt	0000
3	Local Name	MBC005-CAR
4	SYNC/AG	SYNC module

20F-8, No.107, Sec. 1, Jhongshan Rd.,
Shinjhuang City, Taipei County 242, Taiwan
TEL: +886-2-8522-7628 FAX: +886-2-8522-7784

Ordering Code

Order code	Description	Remark
MBC005-AT2	MBC005-CAR-AT with A2DP, HFP, AVRCP, PBAP , SPP AT command profile	

20F-8, No.107, Sec. 1, Jhongshan Rd.,
Shinjhuang City, Taipei County 242, Taiwan
TEL: +886-2-8522-7628 FAX: +886-2-8522-7784

Federal Communications Commission (FCC) Statement

15.21
You are cautioned that changes or modifications not expressly approved by the part responsible for compliance could void the user's authority to operate the equipment.

15.105(b)
This equipment has been tested and found to comply with the limits for a Class B digital device, pursuant to part 15 of the FCC rules. These limits are designed to provide reasonable protection against harmful interference in a residential installation. This equipment generates, uses and can radiate radio frequency energy and, if not installed and used in accordance with the instructions, may cause harmful interference to radio communications. However, there is no guarantee that interference will not occur in a particular installation. If this equipment does cause harmful interference to radio or television reception, which can be determined by turning the equipment off and on, the user is encouraged to try to correct the interference by one or more of the following measures:

-Reorient or relocate the receiving antenna.
-Increase the separation between the equipment and receiver.
-Connect the equipment into an outlet on a circuit different from that to which the receiver is connected.
-Consult the dealer or an experienced radio/TV technician for help.

This device complies with Part 15 of the FCC Rules. Operation is subject to the following two conditions:
1) this device may not cause harmful interference and
2) this device must accept any interference received, including interference that may cause undesired operation of the device.

The end product with this module may subject to perform FCC part 15 unintentional emission test requirement and be properly authorized.

This device is intended for OEM integrator only.

FCC RF Radiation Exposure Statement:

This equipment complies with FCC radiation exposure limits set forth for an uncontrolled environment. End users must follow the specific operating instructions for satisfying RF exposure compliance. This transmitter must not be co-located or operating in conjunction with any other antenna or transmitter.

USERS MANUAL OF THE END PRODUCT:

The end user has to be informed that the FCC radio-frequency exposure guidelines for an uncontrolled environment can be satisfied. The end user has to also be informed that any changes or modifications not expressly approved by the manufacturer could void the user's authority to operate this equipment. If the size of the end product is smaller than 8x10cm, then additional FCC part 15.19 statement is required to be available in the users manual: This device complies with Part 15 of FCC rules. Operation is subject to the following two conditions: (1) this device may not cause harmful interference and (2) this device must accept any interference received, including interference that may cause undesired operation.

LABEL OF THE END PRODUCT:

The final end product must be labeled in a visible area with the following " Contains TX FCC ID: 2AJFZ-MBC005 ". If the size of the end product is larger than 8x10cm, then the following FCC part 15.19 statement has to also be available on the label: This device complies with Part 15 of FCC rules. Operation is subject to the following two conditions: (1) this device may not cause harmful interference and (2) this device must accept any interference received, including interference that may cause undesired operation.