Amateur Radio
AR-39 SERIES

USER'S MANUAL

PREFACE

Thank you very much for choosing our Multi-Band Amateur Radio in favor of our products.

This Amateur radios utilizes the latest advanced technology to provide reliable communications in today's demanding communications environments. It is extremely stable and reliable for long distance communication with a sleek and compact design. It features emergency alarm, personnel death alarm, work alone, APRS position reporting, analog DTMF, 2TONE, 5TONE, CTCSS/DCS encode/decode. Whether you are a professional who needs to keep in touch with your active team (such as ranching, farming, driving, hunting, forest protection, tactical training) or a recreational user who just wants to keep in touch with friends and family, this product will surely bring you all kinds of convenience in your work, life and leisure.

To avoid personal injury or property damage caused by improper operation, please read all information carefully before using our products. To ensure that you maximize the convenience of this product, please read this manual and the Safety Information Manual before use.

WARNING: MODIFICATION OF THIS DEVICE TO RECEIVE CELLULAR RADIOTELEPHONE SERVICE SIGNALS IS PROHIBIITED UNDER FCC RULES AND FEDERRAL LAW.

ATTENTION! When programming the radio, start by reading the factory software data, and then rewrite this data with your frequency etc., to a new saved code plug, otherwise errors may occur. You can use the programming cable with a PC to program the authorized frequency, bandwidth, power, etc. your programming must comply with your FCC (or EU other country) license certification.

ATTENTION! Before using this product, read the RF Energy Exposure and Product Safety Guide that ship with the radio which contains instructions for safe usage and RF energy awareness and control for compliance with applicable standards and regulation.

Table of Contents

Chapter 1. Getting Started
1.1 Regulations and Safety Warnings
1.2 Content of the packaging
1.3 Features and Functions
Chapter 2. Battery Information
2.1 Charging the Battery Pack
2.2 Charger Supplied
2.3 How to Charge
2.4 LED Indicator
2.5 How to Store the Battery
2.6 Using the Type-C USB Charger
Chapter 3. Installation of Accessories
3.1 Installing/ Removing the Antenna
3.2 Installing the battery pack
3.3 Installing the Additional Speaker /Microphone (Optional)
Chapter4. Radio Overview
4.1 Buttons and controls of the radio
4.2 Main keypad controls
4.3 Programmed Key (SK1/SK2)
4.4 Status Indications
4.5 LCD icon summary
Chapter 5. Basic Operations
5.1 Power on the radio
5.2 Adjusting the volume
5.3 Main Band/Sub Band Switch
5.4 VFO/Channel Switch
5.5 Frequency (VFO) mode
5.6 Channel (MR) mode and Channel selection
5.7 Select a Zone
5.8 Making a call
5.9 Emergency Alert
5.10 FM Radio (FM)
5.11 Radio Interrupt
5.12 NOAA Weather/ Weather Alert
5.13 One touch frequency Search
Chapter 6. Advanced Features
6.1 Scanner
6.2 DTMF
6.3 DTMF Enc
6.4 Dual Watch
*6.*5 Manual Programming (Channels Memory)
6.6 Repeaters Programming
Chapter 7. Main Menu Functions
7.1 Basic use
7.2 Using short-cuts
7.3 Radio General Settings
Appendix A. – Trouble shooting guide
Appendix B. - Technical Specifications
Appendix C. - Shortcut Menu operations
Appendix D. - DCS Table
Appendix E. - CTCSS Table

Chapter 1. Getting Started

1.1 Regulations and Safety Warnings

FCC Regulatory Conformance

This equipment has been tested and found to comply with the limits for a Class B digital device, pursuant to Part 15 of FCC Rules. These limits are designed to provide reasonable protection against harmful interference in a residential installation. This equipment generates and can radiate radio frequency energy. If not installed and used in accordance with the instructions, it may cause harmful interference to radio communications. However, there is no guarantee that interference will not occur in a particular installation. Verification of harmful interference by this equipment to radio or television reception can be determined by turning it off and then on. The user is encouraged to try to correct the interference by one or more of the following measures:

- Reorient or relocate the receiving antenna.
- Increase the separation between the equipment and receiver.
- Connect the equipment into an outlet on a circuit different from that to which the receiver is connected.
- Consult the dealer or an experienced radio/TV technician for help.

Changes or modifications not expressly approved by the party responsible for compliance could void the user's authority to operate the equipment.

This device complies with Part 15 of the FCC Rules. Operation is subject to the condition that this device does not cause harmful interference.

This device must accept any interference received, including interference that may cause undesired operation.

WARNING / MODIFICATION OF THIS DEVICE TO RECEIVE CELLULAR RADIOTELEPHONE SERVICE SIGNALS IS PROHIBIITED UNDER FCC RULES AND FEDERRAL LAW.

Compliance with RF Exposure Standards

The radio complies with the following RF energy exposure standards and guidelines:

- United States Federal Communications Commission, Code of Federal Regulations; 47 CFR § 1.1307, 1.1310 and 2.1093
- American National Standards Institute (ANSI) / Institute of Electrical and Electronic Engineers (IEEE) C95.1:2005; Canada RSS102 Issue 5 March 2015
- Institute of Electrical and Electronic Engineers (IEEE) C95.1:2005 Edition

RF Exposure Compliance and Control Guidelines and Operating Instructions

To control your exposure and ensure compliance with the occupational/ controlled environmental exposure limits, always adhere to the following procedures.

Guidelines:

- Do not remove the RF Exposure Label from the device.
- User awareness instructions should accompany device when transferred to other users.
- Do not use this device if the operational requirements described herein are not met.

Operating Instructions:

- Transmit no more than the rated duty factor of 50% of the time. To transmit (talk), press the Push-to-Talk (PTT) key. To receive calls, release the [PTT] key. Transmitting 50% of the time, or less, is important because the radio generates measurable RF energy only when transmitting (in terms of measuring for standards compliance).

- Keep the radio unit at least 2.5cm away from the face. Keeping the radio at the proper distance is important as RF exposure decreases with distance from the antenna. The antenna should be kept away from the face and eyes.
- When worn on the body, always place the radio in an approved holder, holster, case, or body harness or by use of the correct clip for this product. Use of non-approved accessories may result in exposure levels which exceed the FCC's occupational/ controlled environmental RF exposure limits.
- Use of non-approved antennas, batteries, and accessories causes the radio to exceed the FCC RF exposure guidelines.
- Contact your local dealer for the product's optional accessories.

■Precautions for Portable Terminals

Operating Prohibitions

To protect you against any property loss, bodily injury or even death, be sure to observe the following safety instructions:

1. Do not operate the product in a location containing fuels, chemicals, explosive atmospheres and other flammable or explosive materials. In such location, only an approved Ex-protection model is allowed for use, but any attempt to assemble or disassemble it is strictly prohibited.
2. Do not operate the product near or in any blasting area.
3. Do not operate the product near any medical or electronic equipment that is vulnerable to RF signals.
4. Do not hold the product while driving.
5. Do not operate the product in any area where use of wireless communication equipment is completely prohibited.

Important Tips

To help you make better use of the product, be sure to observe the following instructions:

1. Do not use any unauthorized or damaged accessory.
2. Keep the product at least 2.5 centimeters away from your body during transmission.
3. Do not keep the product receiving at high volume for a long time.
4. For vehicles with an air bag, do not place the product in the area over the air bag or in the air bag deployment area.
5. Keep the product and its accessories out of reach of children and pets.
6. Please operate the product within the specified temperature range.
7. Continuous transmission for a long time may lead to heat accumulation within the product. In this case, please keep it at a proper location for cooling.
8. Handle the product with care.
9. Do not disassemble, modify or repair the product and its accessories without authorization.

■Precautions for Batteries

Charging Prohibitions

To protect you against any property loss, bodily injury or even death, be sure to observe the following safety instructions:

1. Do not charge or replace your battery in a location containing fuels, chemicals, explosive atmospheres and other flammable or explosive materials.
2. Do not charge your battery that is wet. Please dry it with a soft and clean cloth prior to charge.

3. Do not charge your battery suffering deformation, leakage and overheat.
4. Do not charge your battery with an unauthorized charger.
5. Do not charge your battery in a location where strong radiation is present.
6. Overcharge shall always be prohibited for it may shorten the life of your battery.

Maintenance Instructions

To help your battery work normally or prolong its life, be sure to observe the following instructions:

1. Accumulated dust on charging connector may affect normal charging. Please use a clean and dry cloth to wipe it on a regular basis.
2. It is recommended to charge the battery under 5℃~40℃. Violation of the said limit may cause battery life reduction or even battery leakage.
3. To charge a battery attached to the product, turn it off to ensure a full charge.
4. Do not remove the battery or unplug the power cord during charging to ensure a smooth charging process.
5. Do not dispose of the battery in fire.
6. Do not expose the battery to direct sunlight for a long time nor place it close to other heating sources.
7. Do not squeeze and penetrate the battery, nor remove its housing.

Transportation Instructions

1. Damaged batteries must not be transported.
2. To avoid short circuit, separate the battery from metal pars or from each other if two or more batteries are transported in one packaging.
3. The radio must be switched off and secured against switch-on, if the battery is attached.

The content of the shipment must be declared in the shipping documents and by a Battery Shipping Label on the packaging. Contact your hauler for the local regulations and further information.

1.2 Content of the packaging

This transceiver comes shipped with the following items in the box:

- 1 Radio body
- 1 Antenna
- 1 Lithium-Ion battery pack
- 1 Charger (with Type-C cable)
- Instruction Manual

******If any item is missing, please notify your Baofeng / Pofung dealer.*

1.3 Features and Functions

- 2.0" TFT large screen, full keyboard, fully open menu operation
- Scanner function: VFO scan range setting, three scan recovery methods, channel scan, CTC/DCS scan, scan channel addition and removal
- 108-136,136-174,220-260,350-390,400-520MHz Multiband scanning receiver (**Suitable for North American users*)
- Built-in input method, allows this device to edit channel name
- NOAA Weather Radio Channel Reception in the United States and Canada
- Frequency step, selectable between | 12.5K | 25.0K |
- Type-C direct charging and charging stand, more convenient battery life
- Dual-band handheld transceiver
- High Capacity Lithium-Ion battery
- 50 CTCSS tones and 105 DCS codes
- 10 zones storage, Up to 640 named memory channels
- Power selectable
- Function beep on the keyboard
- Programmable repeater offset
- Transmission time-out timer
- Busy channel lock out
- LED flashlight
- Ten (10) levels of Squelch adjustment
- End of transmission tone, aka “Roger Beep”
- DTMF encoder and DTMF manual dial
- Broadcast FM radio receiver 87.5-108 MHz
- VOX (voice activated transmit)
- Alarm function
- Display illumination programmable via keypad
- Dual watch / Dual reception
- Battery saving function
- Scan mode
- Built in CTCSS/DCS tones
- PC programmable
- Analog signaling DTMF, 2TONE, 5TONE, BDC1200 codecs
- One touch search frequency

Chapter 2. Battery Information

2.1 Charging the Battery Pack

The Li-ion battery pack is not charged at the factory; please charge it before use. Charging the battery pack for the first time after purchase or extended storage (more than 2 months) may not bring the battery pack to its normal maximum operating capacity. Best operation will require fully charging/ discharging the battery two or three times before the operating capacity will reach its best performance. The battery pack life may be depleted when it's operating time decreases even though it has been fully and correctly charged. If this is the case, replace the battery pack.

2.2 Charger Supplied

Please use the specified charger provided by our company. Other models may cause explosion and personal injury. After installing the battery pack, and if the radio displays low battery with a voice prompt, please charge the battery.

2.2.1 Use Caution with the Li-ion Battery

a. Do not short the battery terminals or throw the battery into a fire. Never attempt to remove the casing from the battery pack, as our company cannot be held responsible for any accident caused by modifying the battery.

b. The ambient temperature should be between 5℃-40℃ (40˚F - 105˚F) while charging the battery. Charging outside this range may not fully charge the battery.

c. Please turn off the radio before inserting it into the charger. It may otherwise interfere with correct charging.

d. To avoid interfering with the charging cycle, please do not cut off the power or remove the battery during charging until the green light is on.

e. Do not recharge the battery pack if it is fully charged. This may shorten the life of the battery pack or damage the battery pack.

f. Do not charge the battery or the radio if it is damp. Dry it before charging to avoid damage.

WARNING !

When keys, ornamental chain or other electric metals contact the battery terminal, the battery may become damage or injure a human. If the battery terminals are short circuited it will generate a lot of heat. Take care when carrying and using the battery. Remember to put the battery or radio into an insulated container. Do not put it into a metal container.

2.3 How to Charge

a. Plug the AC adaptor into the AC outlet, and then plug the cable of the AC adaptor into the DC jack located on the back of the charger. The indicator light blinks orange and is then ready to charge a battery.

b. Plug the battery or the radio into the charger. Make sure the battery terminals are good in contact with charging terminals. The indicator light turns to red--- charging begins.

c. It takes approximately 2-5 hours to fully charge the battery. When the lamp lights green, the charging is completed. Remove the battery or the radio unit with its battery from socket.

When charging a radio (with battery) the indicating lamp will not turn into green to show the fully charged status if the radio is powered on. Only when the radio is switched off will the lamp indicate normal operation. The radio consumes energy when it is power-on, and the charger cannot detect the correct battery voltage when the battery has been fully charged. So the charger will charge the battery in constant voltage mode and fail to indicate correctly when the battery has been fully charged.

2.4 LED Indicator

STATUS	LED
No Battery	Green and red alternately flashing
Charge Normally	Red
Fully Charged	Green
Trouble	Red blinks fast for a long time

NOTE：Trouble means battery too warm, battery short-circuited or charger short-circuited.

2.5 How to Store the Battery

a. If the battery needs to be stored, keep it in status of 80% discharged.

b. It should be kept in low temperature and dry environment.

c. Keep it away from hot places and direct sunlight.

» Do not short circuit the battery terminals.

» Never attempt to remove the casing from the battery pack.

» Never store the battery in unsafe surroundings, as a short may cause an explosion.

» Do not put the battery in a hot environment or throw it into a fire, as it may cause an explosion.

2.6 Using the Type-C USB Charger

The Type-C USB charger is a handy port that allows you to conveniently charge your Li-ion battery pack.

1. Make sure your radio is turned OFF.
2. Plug the Type-C USB cable into the Type-C USB charging port on your battery. Connect the other end of the micro-USB charger to wall power outlet.
3. An empty battery will be fully charged in 4 hours.
4. The battery meter on LCD will move to indicate the battery is charging.

Note:

- ***It is recommended to power OFF your radio while charging. However, if power is turned on while charging, you may not be able to transmit a message if the battery***

is completely empty. Allow time for the battery to charge to 1 bar before attempting to transmit a message.

• For optimal battery life, remove the radio from the charger within 6 hours. Do not store the radio while connected to the charger.

Chapter 3. Installation of Accessories

Before the radio is ready for use we need to attach the battery pack, as well as charge the battery.

3.1 Installing/ Removing the Antenna

1). Installing the Antenna: Screw the antenna into the connector on the top of the transceiver by holding the antenna at its base and turning it clockwise until secure.

2). Removing the Antenna: Turn the antenna counter-clockwise to remove it.

3.2 Installing the battery pack

Before attaching or removing the battery make sure your radio is turned off by turning the power/volume knob all the way counter-clockwise.

1). Make sure the battery is aligned in parallel with the radio body with the lower edge of the battery about 1-2cm below the edge of the radio.

2). Once aligned with the guide-rails, slide the battery upward until you hear a click as the battery locks in place.

Remove the battery pack

To remove the battery, press the battery release above the battery pack, as you slide the battery downward.

3.3 Installing the Additional Speaker/Microphone (Optional)

Pry open the rubber MIC-Headset jack cover and then insert the Speaker / Microphone plug into the double jack.

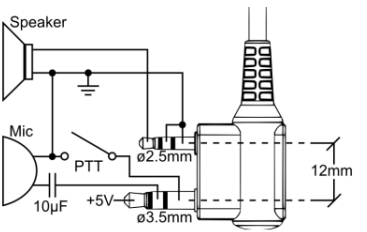

Chapter4. Radio Overview

4.1 Buttons and controls of the radio

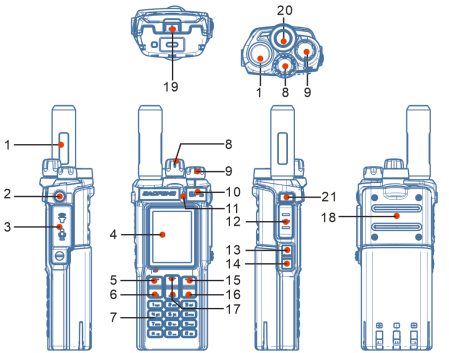

1. Antenna
2. PTT key
3. Accessory jack
4. Color LCD
5. ☰ Key (MENU)
6. P1- VFO/MR mode key
7. Numeric keypad
8. Channel knob
9. Power/Volume knob
10. NC
11. RX_TX Status LED
12. PTT key
13. SK1 Programmable key (default: FM Radio/alarm)
14. SK2 Programmable key (Monitor /Flashlight)
15. ⌂ Key (EXIT)
16. P2- A / B select key
17. ▲ or ▼ navigation keys
18. Speaker
19. Battery release latch
20. LED flashlight
21. Flashlight key

4.2 Main keypad controls

◎ P1- VFO/MR mode key: Short press to switch VFO/MR mode. Press and hold to switches channel display mode: Channel CH, Frequency (display small channel number), Name (channel alias).

◎ P2- A / B select key: Short press to switches between A (upper) and B (lower) displays. Press and hold to switch Double Wait / Signal Wait / Off dual watch mode.

◎ Key (EXIT): Short press to return to the menu or return to the previous menu.

◎* : Press and hold to lock or unlock the keyboard. In transit mode, short press the key in inverted frequency (display R)\offline (display T)

◎# : Short press to enter DTMF dial. Press and hold to scan on and off.

◎ 0[space] : Press and hold to enter weather switch to select weather channel.

4.3 Programmed Key (SK1/SK2)

It is possible to set different functions for [SK1], [SK2] keys.

Method 1: In radio Menu -Radio Setting –Press and Longpress SK1, SK2.

Method 2: In PC software –Buttons.

Option	Functionality
None	No function is assigned to this button.
Scan	To enable or disable the Scan feature.
Monitor	To enable or disable the Monitor feature.
Flashlight	To enable or disable the flashlight feature.
FM Radio	To enable or disable the FM Radio feature.
SOS	To enable or disable the emergency alarm feature.
One Touch Search	To enable or disable the One Touch Search feature.
1750Hz	Transmits 1750Hz Tone Burst
One Touch Call	To make a call or send a message to the preset contact or implement an auxiliary feature.
Zone	To Switch between the two zone.
Battery Display	Check the current battery capacity voltage
VOX	To enable or disable the VOX feature.

4.4 Status Indications

The top LED will help you to identify the current radio status.

LED Indication	What it Indicates
Constant Green	Receiving Signal
Constant Red	Transmitting signal
Flashes Green	Monitor mode/Scanning Receiving

4.5 LCD icon summary

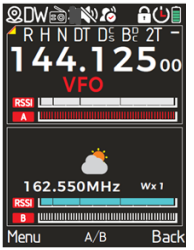

DT	Make sure you can hear the DTMF side tone from the radio speaker, set to DT-ST, ANI-ST, DT+ANI.	**R**	Reverse function enabled
2T	2TONE signaling enabled for current channel/frequency	+	Enables access of repeaters in VFO/Frequency Mode. TX will be shifted higher in frequency than RX。
5T	5TONE signaling enabled for current channel/frequency	-	Enables access of repeaters in VFO/Frequency Mode. TX will be shifted lower in frequency than RX
BDC	BDC1200 signaling enabled for current channel/frequency	N	Narrowband enabled
CT	CTCSS enabled		Scan enabled
DCS	DCS enabled	**T**	Talkaround has been activated, off grid at the central turntable. The transmission frequency is equal to the receive frequency

Chapter 5. Basic Operations

5.1 Power on the radio

• Turning the unit on

To turn the unit on, simply rotate the **Volume/Power** knob clockwise until you hear a "click". If your radio powers on correctly there should be an audible double beep after about one second and the display will show a message or flash the LCD depending on settings for about one second. Then it will display a frequency or channel. If the Voice prompt is enabled, the voice will announce "frequency mode" or "channel mode".

• Turning the unit off

Turn the Volume/Power knob counter-clock wise all the way until you hear a "click". The unit is now off.

5.2 Adjusting the volume

To turn up the volume, turn the **volume/power** knob clock-wise. To turn the volume down, turn the Volume/Power knob counter-clock-wise. Be careful not to turn it too far, as you may inadvertently turn your radio off.

5.3 Main Band/Sub Band Switch

Press the **[P2]** key switches between A (upper) and B (lower) displays. The frequency or channel on the selected display becomes the active listening and transmit frequency or channel.

5.4 VFO/Channel Switch

Press the **[P1]** key switches between Frequency (VFO) Mode and Memory (MR) mode. Memory mode is sometimes also referred to as Channel mode.

For everyday use, Channel (MR) mode is going to be a whole lot more practical than Frequency (VFO) mode. However, Frequency (VFO) mode is very handy for experimentation out in the field. Ultimately which mode you end up using will depend entirely on your use case.

5.5 Frequency (VFO) mode

In Frequency (VFO) mode you can navigate up and down the band by using the ▲ or ▼ keys. Each press will increment or decrement your frequency according to the frequency step you've set your transceiver to.

You can also input frequencies directly on your numeric keypad with kilohertz accuracy.

The following example assumes the use of a 12.5 kHz frequency step.

Example. Entering the frequency 436.61250 MHz on display *A*

(1) In standby mode, press **[P1]** key to switch to the frequency (VFO) mode.

(2) Enter **[4][3][6][6][1][2][5] [0]** on the numeric keypad.

WARNING!

Just because you can program in a channel does not mean you're automatically authorized to use that frequency. Transmitting on frequencies you're not authorized to operate on is illegal, and in most jurisdictions a serious offence. However, it is legal in most jurisdictions to listen. Contact your local regulatory body for further

information on what laws, rules and regulations apply to your area.

5.6 Channel (MR) mode and Channel selection

Press **[P1]** key switches between Frequency (VFO) Mode and Memory (MR) mode. select Channel mode.

- **Operation 1**: Press the ▲ or ▼ navigation key to select the channel.
- **Operation 2**: Turn the channel switch to select a channel.
- **Operation 3**: Input the channel numbers by the keyboard. For example, if you want switch to channel 12, input [1][2] a total of 2 digits, and it will switch to channel 12.

When the voice prompt function is enabled, the corresponding channel will be broadcast by voice.

5.7 Select a Zone

A zone is a group of channels with the same property. The radio supports up to 10 zones, with a maximum of 64 channels per zone. To select a zone, do one of the following:

Press ☰ key go to Menu > Zone, press ▲ or ▼ navigation key to select a zone, and then press ☰ key to switch to the selected zone.

The corresponding regional alias will be displayed at the bottom of the screen.

5.8 Making a call

NOTE: Press the ⌂ key to switch the main channel to the other channel if there are 2 channels shown on the display. In standby mode, press **[P1]** *key to switch between frequency (VFO) mode and channel (MR) mode.*

- **Channel mode call**: After select a channel, hold down the **[PTT]** key to initiate a call to the current channel. Speak into the microphone with normal tone. Making a call, the red LED is on.
- **Frequency mode call**: Press [P1] key to switch to the frequency mode, input the working frequency within the allowable frequency range, and press and hold the **[PTT]** key to transmit on the current frequency. Speak into the microphone with normal tone. Making a call, the red LED is on.
- **Receive a call**: When you release the **[PTT]** key, you can answer it without any action.
  When receiving a call, the green LED is on.

NOTE: To ensure the best reception volume, keep the distance between the microphone and the mouth at the time of transmission from 2.5 cm to 5 cm.

5.9 Emergency Alert

The Emergency Alert feature can be used to signal members in your group for help.

To activate the emergency alert function, Press the pre-programmed **[SOS]** key.

Press the pre-programmed [**SOS**] to exit the emergency alert function.

WARNING: The Emergency Alert feature should only be used in the even of an actual emergency.

5.10 FM Radio (FM)

Method 1: Press ☰ key go to the main Menu -> Radio Settings -> Press/ Longpress of "SK1/SK2" as [**FM Radio**], and turn on or off the radio by pressing the preset [**FM Radio**] key.

Method 2: Press ☰ key go to the main Menu -> Radio Settings ->Radio On/Off, turn the radio on or off.

After turning on the radio function, the station search method is as follows:

-Press # key to enter radio search mode, the screen displays 'Seeking...', the radio will automatically save the searched radio frequency as a radio channel (memory mode).

-Press ▲ or ▼ to select the radio channel.

-Directly input familiar radio frequency by numeric keys (frequency mode, e.g. 96.9MHz, input 969)

-Short press the preset [FM Radio] key or 🏠 key to exit the radio mode.

The frequency ranges to listen to the radio is 65-108MHz. When listening to broadcast FM, press [P2] key switches between 65-75 MHz and 76-108 MHz band.

5.11 Radio Interrupt

On: When FM radio is used, you can still receive or transmit on the channel.

Off: When FM radio is used, the radio will not permit a transmission or reception.

*5.11.1*Monitor

In standby, Press the pre-programmed [**Monitor**] key to enter Monitor. When receiving matched carrier but the signaling or the signal is too weak, this function allows monitor the weak signal.

Press the pre-programmed **[Monitor]** key again to turn off the speaker and exit the Monitor mode.

*5.11.2*Keypad lock

The radio features a keypad lock that locks out all keys except for the three side keys.

To enable or disable the keypad lock, press and hold * the key for about two seconds.

You can also enable so that the radio automatically locks the keypad after ten seconds from the menu.

*5.11.3*Frequency reversal

A short momentary press of the key enables the reverse function

If you for some reason want to listen to the repeater's input frequency instead, press * key momentarily and you'll reverse your transmit and receive frequencies.

5.11.4 TX Repeaters tone

Tone-burst 1750Hz, but also 1000Hz, 1450Hz, 2100Hz, these tone-bursts are mainly used for repeater activation and are more common in Europe.

Before using the Tone-burst function, the SK1/SK2 programmable key must be defined as the “1750Hz” function.

Press the pre-programmed [**1750Hz**] key to send 1750Hz tone-bursts. This function is useful for communications through repeaters.

5.12 NOAA Weather/ Weather Alert

Your radio has a NOAA Weather Radio function, to enable the user to receive weather reports from designated NOAA stations. Your radio also has a NOAA Weather Scan function, to enable the user to scan all 10 channels of the NOAA Weather Radio.

- Press and hold the 0 key to enter NOAA scan reception mode.

-Use the ▲ or ▼ keys to select a NOAA channel. or press and hold the # key to automatically cycle through NOAA channels.

Channels with strong signals will automatically remain on that channel for normal NOAA broadcast reception. You can perform the operations below:

Enable NOAA alert functionality:

Press the ☰ key to enter the Weather Alert menu, then select ON to enable the Weather Alert functionality.

- While the Weather Alert functionality is enabled, select OFF to disable the Weather Alert functionality.

Press and hold the 0 key or press the key to exit NOAA reception mode and return to standby mode.

Weather channel frequencies and names

Channel Number	RX Frequency MHz	Channel Number	RX Frequency MHz
CH-01	162.550	CH-06	162.500
CH-02	162.400	CH-07	162.525
CH-03	162.475	CH-08	161.650
CH-04	162.425	CH-09	161.775
CH-05	162.450	CH-10	163.275

NOTE: Weather Channels Wx 1 Thru 10, Receive-only channels for NOAA and Canadian weather broadcasts. You cannot transmit on these channels.

5.13 One touch frequency Search

Press ☰ key go to the main Menu -> Radio Settings -> Press/ Longpress of "SK1/SK2" as [**OneTouch Search**], and enter the frequency search mode by pressing the preset [**OneTouch Search**] key.

When using the OneTouch Search function, this unit will act as a receiver.

Press the preset [**OneTouch Search**] key, the screen will display “Seeking” and the indicator light will be yellow.

Successful seeking will display the search frequency and CTCSS/DCS, and turn on the speaker.

-You can press the ☰ key to save the search frequency and CTCSS/DCS to the channel.

-Press and hold the [PTT] key to make a callback.

Chapter 6. Advanced Features

6.1 Scanner

The radios features a built in scanner for the VHF and UHF bands. When in Frequency (VFO) mode it will scan in steps according to your set frequency step. In Channel (MR) mode it will scan your channels.

To enable the scanner, press and hold the # key for about two seconds. You can change the scanning direction with the ▲ or ▼ keys. Press and hold the # key to

exit scanning mode.

6.1.1 Frequency Ranger

In frequency mode, the frequency sweep range can be precisely set. Input the start value and end value of the sweep frequency through the keyboard.

EX: Enter 144146, in frequency mode, scan in the range of 144.000-146.000MHZ. Enter 430440, in frequency mode, scan in the range of 430.000-440.000MHZ.

Note: for VFO frequency Ranger, see Menu>SCAN>Freq Ranger.

6.1.2 Channel Scan Range

In channel mode, the scan range is allowed to be all channels in the current zone, channels that have been added to the current zone.

-All: All channels stored in the current zone.

-Memory Scan: Scanned channels that are added to the current zone.

6.1.3 Scan modes

The scanner is configurable to one of three ways of operation: Time, carrier or search, each of which is explained in further details in their respective section below.

-Time operation

In Time Operation (TO) mode, the scanner stops when it detects a signal, and after a factory preset time out, it resumes scanning.

-Carrier operation

In Carrier Operation (CO) mode, the scanner stops when it detects a signal, and after a factory preset time with no signal it resumes scanning.

-Search operation

In Search Operation (SE) mode, the scanner stops when it detects a signal.

To resume scanning you must press and hold the # ↑ key again.

Note: for Scan mode, see Menu>SCAN>Scan Mode.

6.1.4 Scan Sub-Code

To search for a CTCSS code, do the following:

(1) In VFO mode, enter a known frequency, such as 144.525.

(2) Press ☰ key to enter menu>>Scan>>Scan Sub-Code.

(3) Press ▲ or ▼ to select CTCSS;

(4) Press the ☰ key to enter the CTCSS code, and scan the CTCSS code in sequence. When a valid CTCSS code is scanned, it stays on the CTCSS code and the speaker is turned on.

(5) Press the ☰ key to store the scanned CTCSS code and exit the scan to return to the previous menu. In standby mode, the '**CTC**' icon will be displayed on the top line of the screen. Press and hold the **PTT** key to make a callback.

To search for a DCS code, do the following:

(1) In VFO mode, enter a known frequency, such as 144.525.

(1) Press ☰ key to enter menu>>Scan>>Scan Sub-Code.

(2) Press ▲ or ▼ to select DCS;

(3) Press the ☰ key to enter the DCS code scanning, and scan the DCS code in turn. When a valid DCS code is scanned, it stays on the DCS code and the speaker is turned on.

(4) Press the ☰ key to store the scanned DCS code and exit the scan to return to the previous menu. In standby mode, the **'DCS'** icon will be displayed on the top line of the screen. Press and hold the **PTT** key to make a callback.

6.1.5 Sub-Code scan memory

In MR mode or VFO mode, the scanned CTCSS/DCS code can be stored as only TX CTCSS/DCS code, RX CTCSS/DCS code only, TX and RX CTCSS/DCS code to replace the CTCSS/DCS code setting of the current channel or frequency mode of the radio.

To save the settings of CTCSS/DCS code scan, the operation is as follows:

(1) Press the ☰ key to enter menu >> Scan >> Scan Memory.

(2) Press the ☰ key to enter the Scan Memory setting, and press the ▲ or ▼ key to select:

- **ENCODER**: The scanned CTCSS/DCS code will be stored as the transmitted CTCSS/DCS code of the current channel or frequency mode (only replace its transmitted TX CTC/DCS).
- **DECODER**: The scanned CTCSS/DCS code will be stored as the receiver CTCSS/DCS code of the current channel or frequency mode (only replace its receiver RX CTC/DCS).
- **ALL**: The scanned CTCSS/DCS code will be stored as the received and transmitted CTCSS/DCS code of the current channel or frequency mode (at the same time as the received and transmitted Sub-Code).

(3) Press the ☰ key to save the settings and return to the previous menu;

Note: Only when a valid CTCSS/DCS code is scanned and stopped, press the ☰ key to store the CTCSS/DCS code and replace the corresponding CTCSS/DCS code of the current channel or frequency.

6.2 DTMF

DTMF is an in-band signaling method using dual sinusoidal signals for any given code. Originally developed for telephony systems, it has proved a very versatile tool in many other areas.

In two-way radio systems, DTMF is most commonly used for automation systems and remote control. A common example would be in amateur radio repeaters where some repeaters are activated by sending out a DTMF sequence (usually a simple single-digit sequence).

DTMF frequencies and corresponding codes

	1209Hz	1336Hz	1477Hz	1633Hz
697Hz	1	2	3	A
770Hz	4	5	6	B
852Hz	7	8	9	C
941Hz	*	0	#	D

The radios has a full implementation of DTMF, including the A, B, C and D codes. The numerical keys, as well as the * and # keys correspond to the matching DTMF codes. The A, B, C and D codes are located in the ☰, ▲, ▼ and 🏠 keys respectively.

To send DTMF codes, press the key(s) corresponding to the message you want to send while holding down the **PTT** key.

6.3 DTMF Enc

Set a DTMF ID as the default call ID for the current channel. Press the PTT key to transmit the selected DTMF ID.

Edit the DTMF ID in Menu or with the PC programing software.

6.3.1 2Tone Enc

Set a 2Tone as the default call ID for the current channel. Press the PTT key to transmit the selected 2Tone.

Edit the 2Tone in the PC programing software before it can be selected.

6.3.2 5Tone Enc

Set a 5Tone as the default call ID for the current channel. Press the [PTT] key to transmit the selected 5Tone.

Edit the 5Tone in the PC programing software before it can be selected.

6.4 Dual Watch

In certain situations, the ability to monitor two channels at once can be a valuable asset. This can be achieved in one of two ways. You can either have one receiver in your radio and flip-flop between two frequencies at a fixed interval (known as Dual Watch), or you can equip a radio with two receivers (known as Dual Receive or Dual VFO). The former method is cheaper to implement and far more common than the latter.

The radio features Dual Watch functionality (single receiver) with the ability to lock the transmit frequency to one of the two channels it monitors.

Enabling or disabling Dual Watch mode

(1) Press the ☰ key to enter the main menu.

(2) Enter 2 on the numeric keypad to get to Radio Settings.

(3) Press the ☰ key to confirm, enter 18 on the numeric keypad to get to Dual Watch.

(4) Press the ☰ key to select.

• Double Wait: Enable the dual-watch function. The radio will display and monitor both channel. 'DW' icon displayed in the first row.

• Signal Wait: Enable the single-watch function. The radio will display both channel. Transmit and receive on the main channel only, sub Channel disables reception. No 'DW' icon displayed in the first row.

(6) Press the ☰ key to confirm.

(7) Press 🏠 to return to the previous menu.

6.5 Manual Programming (Channels Memory)

Memory channels are an easy way to store commonly used frequencies so that they can easily be retrieved at a later date.

Frequency Mode vs. Channel Mode

In standby mode, press [P1] key to switch between frequency (VFO) mode and channel (MR) mode.

These two modes have different functions and are often confused.

Frequency Mode (VFO): Used for a temporary frequency assignment, such as a test frequency or quick field programming if permitted.

Channel Mode (MR): Used for selecting preprogrammed channels.

Ex 1. Programming a Channel Repeater Offset with CTCSS Tone

EXAMPLE New memory in Channel 28:

RX = 432.55000 MHz

TX = 437.55000 MHz (This is a (+ 5) Offset)

TX CTCSS tone 123.0

(1) Press the ⌂ key to switch between menus.

(2) Press [P1] key to set the radio to VFO mode, and the VFO icon is displayed on the lift.

(3) ☰ [3] ☰ [7] ☰ 123.0 ☰ *Selects desired TX encode tone (Ex 123 CTCSS)*

(4) ☰ [3] ☰ [1][3] ☰ [0] [0][5] ☰ *Enter the OFFSET frequency (Ex. 5.00MHz)*

(5) ☰ [3] ☰ [1][4] ☰ [2] ☰ *Select the offset direction (Ex. positive offset）*

(6) Enter RX frequency (Ex. 43255000) *Enter RX frequency (Ex. 43255000)*

(7) ☰ [3] ☰ [1][7] ☰ [2][8] ☰ *Enter the same channel (Ex 10)*

-->> ⌂ *channel has been added*

(8) Press **[P1]** key to return to the MR mode and the channel number will reappear.

Ex 2. Programming a Simplex Channel with CTCSS tone

EXAMPLE New memory in Channel 28:

RX = 432.6500 MHz

TX CTCSS tone 123.0

(1) Press the ⌂ key to switch between menus.

(2) Press [P1] key to set the radio to VFO mode, and the VFO icon is displayed on the lift.

(3) ☰ [3] ☰ [7] ☰ 123.0 ☰ *Selects desired TX encode tone (Ex 123 CTCSS)*

(4) Enter RX frequency (Ex. 43265000) *Enter RX frequency (Ex. 43265000)*

(5) ☰ [3] ☰ [1][7] ☰ [2][8] ☰ *Enter the same channel (Ex 10)*

-->> ⌂ *Channel has been added*

(6) Press **[P1]** key to return to the MR mode and the channel number will reappear.

6.6 Repeaters Programming

The following instructions assume that you know what transmit and receive frequencies your repeater employs, and that you're authorized to use it.

(1) Press **[P1]** key, the transceiver is set to VFO mode, and the VFO icon will be displayed on the lift.
(2) Use the numeric keypad to enter the repeater's output (your receive) frequency.
(3) Press ☰ [3] ☰ [1][3] ☰ to get the offset frequency.
(4) Use the numeric keypad to enter the specified frequency offset.
(5) Press ☰ to confirm and save.
(6) Press ☰ [3] ☰ [1][4] ☰ to get the offset direction.
(7) Use the ▲ or ▼ keys to select plus (positive) or minus (negative) offset.
(8) Press ☰ to confirm and save.
(9) Optional:
a) Save to memory, see the section called “Manual programming” for details.
b) Set up CTCSS; see the section called “CTCSS” for details.
(10) Press ⌂ to exit the menu. If everything went well, you should be able to make a test call through the repeater.

NOTE:

If you're experiencing problems making a connection to the repeater, check your settings and/or go through the procedure again.
Certain Amateur Radio repeaters (especially in Europe) use a 1750Hz tone burst to open up the repeater. To see how this is done with the radios, see the section called “1750Hz Tone-burst”.
If you're still unable to make a connection, contact the person in charge of the radio system with your employer or your local amateur radio club, as the case may be.

Chapter 7. Main Menu Functions

The menu function allows you to perform operations such as selecting zones, Setting SCAN, Radio Settings, Program Channels, and viewing Radio Information.

7.1 Basic use

Use menus with arrow keys
(1) Press the ☰ key to enter the main menu.
(2) Use the ▲ or ▼ keys to navigate between menu items.
(3) After finding the desired next menu item, press the ☰ key again to select the menu item.
(4) Use the ▲ or ▼ keys to navigate between the next menu items.
(5) After finding the desired next menu item, press the ☰ key again to select the menu item.
(6) Use the ▲ or ▼ keys to select the desired parameter.
(7) When you have selected the parameter to be set for a given menu item;
-To confirm your selection, press ☰ and it will save your setting and bring you back to the main menu.
-To cancel your changes, press ⌂ and it will reset that menu item and bring you out of the menu entirely.

(8) To exit out of the menu at any time, press the **PTT** key.

7.2 Using short-cuts

As you may have noticed if you looked at Appendix C, Menu definitions, every menu item has a numerical value associated with it. These numbers can be used for direct access of any given menu item.

Using the menu with short-cuts

(1) Press the ☰ key to enter the menu.

(2) Use the numerical keypad to enter the number of the menu item.

(3) To enter the menu item, press ☰ the key.

(4) For entering the desired parameter you have two options:

a) Use the arrow keys as we did in the previous section; or

b) Use the numerical keypad to enter the numerical short-cut code.

(5) And just as in the previous section;

a) To confirm your selection, press and it will save your setting and bring you back to the main menu.

b) To cancel your changes, press and it will reset that menu item and bring you out of the menu entirely.

(6) To exit out of the menu at any time, press the key.

(7) All further examples and procedures in this manual will use the numerical menu short-cuts.

☰ + 1: Quick access to Zones selection, up to 10 Zones are stored, each zone stores 64 channels;

☰ + 2: Quickly enter the Scan Settings. You will be able to set the VFO frequency range, Scan mode, Scan Sub-Code, Scan Memory;

☰ + 3: Quickly enter the Radio settings (general settings of the radio);

☰ + 4: Quick access to Program Channel (Alias, TX and RX Frequency, TX Power, Bandwidth, Display mode, Channel Memory and Channel delete);

☰ + 5: Quickly query the radio information (ANI ID, Firmware version, Hardware version);

7.3 Radio General Settings

7.3.1 Add Zone

Press the [P1] key to Channel Mode, press the ☰ key >> Zone >> Add Zone, name the newly added zone and save it.

The newly added zone will be automatically configured with a channel, allowing parameters such as Channel Name, Receive Frequency, Transmit Frequency, Receive and Transmit CTCSS/DCS to be reset via the Channel Configuration menu.

Add up to 10 zones, add a full 10 zone will automatically hide the “Add Zone” option.

7.3.2 Power On Displya Setting

-Picture: The radio will display a preset picture when powered on. Picture requires .bmp format, size size 240*320 pixels

-Message: Through CPS programming software, General Setup>>General Setup>>Power On Character.

Or through self-station setup, press the ☰ key >> Radio Setting >> Power On Message.

-Voltage: The power voltage is momentarily displayed.

7.3.3 Display Reversal

For ease of use in different work scenarios, the radio's display interface can be oriented STAN and FAIL model.

Press ☰ key >> Radio Settings >> DIR

-STAN: Normal display mode, suitable for desk or handheld scenarios.

-FAIL: the display interface is reversed, applicable to shoulder or waist-mounted scenarios.

7.3.4 MDF-A/ MDF-B Channel Mode A Display

[A][B] MR/Channel Mode Display Format.

-Freq: Displays programmed Frequency

-Name: Displays the channel name.

-CH: Displays the channel number.

-Freq+Name: Displays programmed Frequency and channel name.

7.3.5 Alarm Model

You can select the type of indication when an alarm is activated from the following options.

Press the key >> Radio Settings >> Alarm Mode.

-Off: Disable alarm function.

-On Site: the alarm tone is given locally and the control center and group members will not receive the alarm signal.

-Code+Sound: After sending an alarm code to the control center and group members, it will automatically activate the hot microphone and send a background tone. The receiver will hear the background sound of the alarm. There are no other audible or visual indications.

-Code+Sound(No): After sending an alarm code to the Control Center and group members, no alarm tone will be sent locally. In the alarm state, there is no sound or visual indication.

-Code+Tone: After sending an alarm code to the control center and group members, a local alarm tone will be emitted. In alarm state, there are audible and visual indications.

7.3.6 Auto Power Off

Allow to set automatic power off when not used for a period of 30 minutes, 60 minutes, 120 minutes, 240 minutes and 480 minutes of operation.

Off: Turn off the function.

7.3.7 Power-on Password

Allows the radio to set a power-on password to protect device security and settings.

Press ☰ >> Radio Settings >> Password.

Prompts “Input password”.

Enter 1-8 digits (0-9), ******** will be displayed. Press the # key to display your entry.

Press the ☰ key to save and return to the previous menu.

To cancel the power-on password

Press the ☰ key >> Radio Settings >> Password.

Prompts “Input password ********”.

Press the ☰ key to delete until all are deleted.

Press ⌂ to save and return to the previous menu.

When the power-on password feature is enabled, the radio will prompt “Input Password” when turning on the radio, and only after entering the correct password will the radio turn on properly.

The power-on password can be read and modified by CPS software.

7.3.8 Channel Alias

Allows you to view or reset the current channel alias as follows:

1. Press ☰ +[4] to enter Program Channel.
2. Press ☰ to select “CHL NAME”;
3. Press ☰ to enter the channel alias editing interface, and you can perform the following operations:

-Press # key to switch input method, switch between numeric, alphabetic and pinyin input method.

-Press 1 to input symbols such as punctuation or brackets;

-Press 2-9 to insert letters or numbers.

-Press 0 to insert a space.

4. Press ⌂ to save the settings and return to the previous menu.

Appendix A. – Trouble shooting guide

Phenomena	Analysis	Solution
You cannot turn on the radio.	The battery may be installed improperly.	Remove and reattach the battery.
	The battery power may run out.	Recharge or replace the battery.
	The battery may suffer from poor contact caused by dirty or damaged battery contacts.	Clean the battery contacts or replace the battery.
During receiving, the voice is weak or intermittent.	The battery voltage maybe low.	Recharge or replace the battery.
	The volume level may be low.	Increase the volume.
	The antenna maybe loose or maybe installed incorrectly.	Turnoff the radio, and then remove and reattach the antenna.
	The speaker maybe blocked.	Clean the surface of the speaker.
You cannot communicate with other group members.	The frequency or signaling type maybe inconsistent with that of other members.	Verify that your TX/RX frequency and signaling type are correct.
	You may be too far away from other members.	Move towards other members.
You hear unknown voices or noise.	You may be interrupted by radios using the same frequency.	Change the frequency, or adjust the squelch level.
	The radio in analog mode maybe set with no signaling.	Request your dealer to set signaling for the current channel to avoid interference
You are unable to hear anyone because of too much noise and hiss.	You may be too far away from other members.	Move towards other members.
	You may be in an unfavorable position. For example, your communication may be blocked by high buildings or blocked in an underground area.	Move to an open and flat area, restart the radio, and try again.
	It may be the result of external disturbance (such as electromagnetic interference).	Stay away from equipment that may cause interference.
The radio keeps transmitting.	VOX may be turned on or the headset is not installed in place	Turn off the VOX function. Check that the headphones are in place.

NOTE: If the above solutions cannot fix your problems, or you may have some other queries, please contact your dealer for more technical support.

Appendix B. - Technical Specifications

GENERAL	
Channel Capacity	640
Channel Spacing	25.0 kHz/12.5 kHz
Input Voltage	7.4 V DC
Battery Life: 5% TX, 5% RX, 90% Standby	Li-on: 20 hours @ 5 watts
Operating temperature	-10˚C to 40˚C
Antenna Impedance	50Ω
Radio Dimensions	155mm X 64mm X 40mm (not including antenna)
Radio Weight	354 g (with Li-ON battery)
TRANSMITTER	
Frequency Range (TX)	144 to 148 MHz, 420 to 450 MHz（America version）(Amateur Band)
Modulation	FM
Spurious Emission	-16 dBm<1GHz, -16 dBm>1GHz
Frequency Stability	±2.5 ppm
Audio Distortion	≤5%
FM Hum & Noise	40 dB
RECEIVER	
Frequency Range	108-136, 136-174, 220-260, 350-390, 400 to 520 MHz (Scan Receiver) FM: 87.5-108MHz
Sensitivity: 12 dB SINAD	-121 dBm
Adjacent Channel Selectivity	-60 dBm
Intermodulation and Rejection	-70 dBm
Rated Audio Power Output	0.75 Watts @ 16 Ω
Rated Audio Distortion	≤5%

NOTE: All specifications may be modified without prior notice or liability. Thank you.

WARNING! **The hardware is designed to support additional frequency bands, be sure to comply with local radio regulations and consult your local radio administration for more compliance information.**

Appendix C. - Shortcut Menu operations

Main Menu	Sub Menu Sequence	Sub Menu Name	Settings	Description
Zone	1	Zone 1	•Channel 1-Channel 64 •+Add Zone: Add a zone and name the zone. The newly added zone will default to one channel 430.12500 MHz	Stored zone, at least one zone saved. Set up to 10 zones and store up to 64 channels per zone. No ADD ZONE option when store up to 10 zones.
Scan	1	Freq Ranger	Up Limit-Down Limit	Setting the upper and lower limit values of the frequency scan range
	2	Chan Ranger	•ALL: Scans all channels in the current zone. •MEMORY SCAN: Scans for channels that have been added to the current zone	In channel mode, the channel scan range is selected. All channels in the current area or added channels when allowed
	3	Scan Mode	•TO : Time Operation – scanning will resume after a fixed time has passed •CO : Carrier Operation - scanning will resume after the signal disappears •SE : Search Operation - scanning will not resume	Scanning Resume Method
	4	Scan SubCode	•CTCSS: scan CTCSS (Scanning range 67-254.1) •DCS: scan DCS ((Scanning range 023N-754I)	Scanning for CTCSS/DCS of known frequencies
	5	Scan Memory	•ENCODER: Saved in TX CTCSS/DCS only. •DECODER: Save only in RX CTCSS/DCS. •ALL: RX_TX are saved (default is all, i.e., encoding and decoding are the same)	This function is helpful to decode a CTCSS/DCS tone if you don't know the exact code.
Radio Setting	1	Squelch	•OFF •Level 1-Level 9	Squelch silences the receiver when there is no signal.Setting the squelch to 0 will open up the squelch entirely.
	2	Power Save	•OFF •1:1|1:2|1:4	Selects the ratio of sleep cycles to awake cycles (1:1, 1:2, 1:4). The higher the number the longer the battery lasts. The higher number increases the RX sleep cycle, but you may miss the first few syllables before the RX opens.

	3	VOX Level	•OFF •Level 1-Level 9	When enabled it is not necessary to push the [PTT] button on the transceiver. Adjust the gain level to an appropriate sensitivity to allow smooth transmission.
	4	VOX Delay	1.0……5.0s	When the VOX is enabled, set up the VOX delay to help to extend the transmission time to avoid stopping a transmission too early.
	5	TOT	•OFF: Transmission is not time-limited, allowing continuous transmission. •15;30;45…210	This feature provides a safety switch that limits transmission time to a programmed value. This will promote battery conservation by not allowing you to make excessively long transmissions, and in the event of a stuck PTT switch it can prevent interference to other users as well as battery depletion.
	6	TOA	•OFF: Disable the TOA feature. •1……10: You can set from 1 to 10 TOA levels. Level 1 means that the transceiver warns you 1 second before the transmission reaches the TOT; level 2 warns you 2 seconds before the TOT and so on.	With the TOA function enabled, if the TOT function (Time Out Timer) has been turned on and your transmission reaches the pre-set end-transmission time, the transceiver will warn you and the TX red indicator starts blinking.
	7	Voice	•OFF| •Chinese| •English	Allows audible voice confirmation of a key press
	8	Language	•English| •Chinese	Setting the language type of function menus and display screens
	9	Beep	•OFF: Disable the Beep feature. •ON: Enable Beep function, every time a button is pressed, you will hear a Beep tone.	Allows audible confirmation of a key press
	10	ROGER	•OFF|•ROGER 1|•ROGER 2|•ROGER 3	Sends an end-of-transmission tone to indicate to other stations that the transmission has ended.
	11	BackLight	•Always On: The backlight is always on. •5……30	Time-out for the LCD backlight. (seconds) Note: This function is valid when turn off the power save.
	12	Brightness	1|2|3|4|5	Adjust the brightness of the LCD screen backlight, 1-5 levels of adjustable brightness. 1 level of the darkest, 5 levels of the brightest
	13	Power on Display	•PICTURE: The radio will display an Baofeng picture when powered on. •MESSAGE: The radio will display the characters set up in PC software when powered on.	Controls the behavior of the display when the transceiver is turned on.

			•VOLTAGE: The power voltage is momentarily displayed.	
	14	Power on MSG	WELCOME	Allows editing of power-up messages on this unit. Press MENU to enter message editing, press EXIT to go forward to delete, and enter text or letters via the keypad.
	15	DIR	•STAN: normal display •FAIL: Revers display	STAN: normal display . FAIL: Revers display
	16	MDF-A	•Freq: Displays programmed Frequency •Name: Displays the channel name. •CH: Displays the channel number •Freq+Name: Displays programmed Frequency and channel name.	[A] MR/Channel Mode Display Format.
	17	MDF-B	•Freq: Displays programmed Frequency •Name: Displays the channel name. •CH: Displays the channel number •Freq+Name: Displays programmed Frequency and channel name.	[B] MR/Channel Mode Display Format.
	18	Dual Watch	•Double Wait：Enable the dual-watch function. •Signal Wait：Enable the single-watch function.	Monitor [A] and [B] at the same time. The display with the most recent activity ([A] or [B]) becomes the selected display.
	19	AutoLock	•OFF：Manual Lock. Long press the * key to lock the keypad. •ON：Auto Lock. Radio will auto lock the keypad when standby for a while.	Press MENU key, then press the * key to unlock the keypad.
	20	Alarm Mode	•Off: Disable alarm function •On Site：The radio will emit siren locally, but will not transmit any emergency signal to the control center. •Code+Sound：The radio gives visible and audible indications during emergency state. •Code+Sound(No)：The radio gives no indication during emergency state, but will unmute its speaker once it receives a call. •Code+Tone：The radio transmits the emergency signals to the control center first, and then gives siren locally with visible indication.	This option allows you to choose the type of emergency. The option specifies the type of alert for the radio during emergency.
	21	ID Verification	Contact 1 Contact 80	

	22	SideTone	•DTMF: DTMF enabled/ disabled. •2 Tone: 2Tone enabled/ disabled. •5 Tone: 5Tone enabled/ disabled. •BDC1200: BDC1200 enabled/ disabled.	OFF: DTMF/2Tone/5Tone/BDC1200 disabled. ON: DTMF/2Tone/5Tone/BDC1200 enabled.
	23	PTT-ID	•OFF: No ID is sent. •BOT: The selected S-CODE is sent at the beginning. •EOT: The selected S-CODE is sent at the ending •BOTH: The selected S-CODE is sent at the beginning and ending.	When to Send PTT-ID Codes are sent during either the beginning or ending of a transmission.
	24	PTT-DLY	100-3000ms	This function allows you to set the delay in sending the ANI code once the PTT is pressed (ANI delay). You can set it between 100 and 3000ms.
	25	ALERT	•1000Hz •1450Hz •1750Hz •2100Hz	Alert frequency is used to activate some dormant repeaters, 1000Hz, 1450Hz, 1750Hz, 2100Hz a total of 4 options are offered.
	26	TAIL	•OFF •55Hz: •120 •180 •240°	This function is used eliminate squelch tail noise between BaoFeng handhelds that are communicating directly (no repeater). Reception of a 55 Hz or 134.4 Hz tone burst mutes the audio long enough to prevent hearing any squelch tail noise

	27-32	Press/LongPress SK1/SK2/SK3	•None:No Function •SCAN:Scan on/off •Monitor:Monitor the weak signal. •Flashlight: Flashlight on/off. •FM Radio: FM Radio on/off •SOS: Long press the key to start alarm, short press again to exit the alarm. •One Touch Search: One Touch Search on/off. •1750Hz: •One Touch Call •Zone:In standby, press the programmed "Zone Select" key, it will allow you input the zone number and then press confirm key will switch to the zone. •Battery Display:Check the current battery capacity voltage •Power:Switch the power between super high, high, middle and low power. •VOX:Set up the VOX level	This part allows users to assign your desired features as shortcut to some keys of the radio. The programmable buttons vary with different radios. Every key corresponds to two kinds of operations: long press or short press. They can be associated to different features or the same feature.
	33	FM Radio	Radio On/Off	Turn on or off the FM radio.
			Radio Interrupt	On: When FM radio is used, you can still receive or transmit on the channel. Off: When FM radio is used, the radio will not permit a transmission or reception.
	34	APO	•OFF: Turn off the function. •30Min/60Min/120Min/240Min/480Min	Allow to set automatic power off when not used for a period of 30Min/60Min/120Min/240Min 480Min of operation. Off: Turn off the function.
	35	Theme	•White •Red •Orange •Yellow •Green •Purple •Blue	Set theme colors: white, red, orange, yellow, green, purple, blue
	36	Password	Input Password	This option allows users to create a password required for powering up a radio. Range 0 – 99999999
	37	Reset	•VFO: Reset VFO only •ALL: Reset menu functions and VFO	Resets the radio to factory defaults, with some exceptions.
Program Channel	1	CH.NAME	Displays the channel name of the current channel	Allow reset the channel name, this function is only valid in channel mode.
	2	RX Frequency	Displays the RX frequency of the current channel	Input the RX frequency by keypad, click the Menu key to save. Press the EXIT key to move forward and delete bits one by one.

	3	TX Frequency	Displays the TX frequency of the current channel	Input the TX frequency by keypad, click the Menu key to save. Press the EXIT key to move forward and delete bits one by one.
	4	Trans Power	power transmission	Set up the TX power for current channel. Selects transmitter power when in VFO/Frequency mode. Use the minimum transmitter power necessary to carry out the desired communications.
	5	Bandwidth	•Narrow: 12.5 kHz bandwidth •Wide: 25 kHz bandwidth	Choose wide band or narrow band for the analog channel.
	6	RX CTCSS	•OFF •67-254.1	Mutes the speaker of the transceiver invthe absence of a specific and continuous sub-audible signal. If the station you are listening to does not transmit this specific and continuous signal, you will not hear anything.
	7	RX DCS	•OFF •023N-754I	Mutes the speaker of the transceiver in the absence of a specific low-level digital signal. If the station you are listening to does not transmit this specific signal, you will not hear anything.
	8	TX CTCSS	•OFF •67-254	Transmits a specific and continuous subaudible signal to unlock the squelch of a distant receiver (usually a repeater).
	9	TX DCS	•OFF •023N-754I	Transmits a specific low-level digital signal to unlock the squelch of a distant receiver (usually a repeater).
	10	Signaling	•DTMF: Set a DTMF ID as the default call ID for the current channel. •2Tone: Set a 2Tone as the default call ID for the current channel. •5Tone: Set a 5Tone as the default call ID for the current channel. •MDC: Set a MDC as the default call ID for the current channel	Edit the DTMF/ 2Tone/ 5Tone/ BDC1200 in the PC programing software before it can be selected. Press the PTT key to transmit the selected DTMF ID/2Tone/ 5Tone/ BDC1200.
	11	SP-Mute	•OFF: You can hear the call once the channel receive matched carrier. •QT: You can hear the call when receive matched CTCSS/DCS signal. •Optional Signal: You can hear the call when receives a matched signaling. •QT+DTMF: You can hear the call when receives a	When the channel is set up for both CTCSS/DCS decoding and optional signaling, you can set up the RX condition in this menu.

			matched CTCSS/DCS and matched signaling.	
	12	Scan Add	•OFF: Disable scanning of the current channel •ON: Add current channel to scan group	Add the current channel to allow it to be scanned
	13	Scan Priority	•OFF: No channel is set as Priority Channel . •ON: Sets the current channel as the scanning priority channel.	This option allows users to select a channel in the scan list as Priority Channel. If only Priority Channel is set, 50% of a radio's scans are on Priority Channel during scanning.
	14	Busy Lockout	•Off: The user can transmit all the time. •On: The radio allows transmission only when the current channel is free.	This option defines the response from the transmitter upon PTT press on the current channel, in order to prevent the user transmitting on channels that are already in use.
	15	Skip Frequency	•OFF: Disable the Skip Frequency feature •ON: Enable Skip Frequency function	
	16	Scramber	•OFF: Disable the Scramber feature •ON: Enable Scramber function	This option allows you to decide whether to enable the Scrambler feature. This technology can invert the frequency spectrum at the transmitting party to make the signal unintelligible to unwanted at a receiving party, so as to achieve communication privacy not equipped with an appropriately set descrambling device.
	17	CH_Memory	CH01-CH64	This menu is used to either create new or modify existing channels, so that they can be accessed from MR/Channel Mode.
	18	CH_Delete	CH01-CH64	This menu is used to delete the programmed information from the specified channel. so that it can either be programmed again or be left empty.
Radio Info	1	Versions	•Firmware Versions •Hardware Versions	Show the Radio ID, Radio name, serial number, model name, frequency range, firmware version, radio data version, latest program date, picture version, language version etc.
	2	My Radio	•Radio ID: View radio ID and allow reset of DTMF ID, 5Tone ID •Radio Name: View radio aliases and allow resetting of aliases	

Appendix D. - DCS Table

DCS CODE LIST

Number	Code	Number	Code	Number	Code	Number	Code	Number	Code
1	D023N	2	D025N	3	D026N	4	D031N	5	D032N
6	D036N	7	D043N	8	D047N	9	D051N	10	D053N
11	D054N	12	D065N	13	D071N	14	D072N	15	D073N
16	D074N	17	D114N	18	D115N	19	D116N	20	D122N
21	D125N	22	D131N	23	D132N	24	D134N	25	D143N
26	D145N	27	D152N	28	D155N	29	D156N	30	D162N
31	D165N	32	D172N	33	D174N	34	D205N	35	D212N
36	D223N	37	D225N	38	D226N	39	D243N	40	D244N
41	D245N	42	D246N	43	D251N	44	D252N	45	D255N
46	D261N	47	D263N	48	D265N	49	D266N	50	D271N
51	D274N	52	D306N	53	D311N	54	D315N	55	D325N
56	D331N	57	D332N	58	D343N	59	D346N	60	D351N
61	D356N	62	D364N	63	D365N	64	D371N	65	D411N
66	D412N	67	D413N	68	D423N	69	D431N	70	D432N
71	D445N	72	D446N	73	D452N	74	D454N	75	D455N
76	D462N	77	D464N	78	D465N	79	D466N	80	D503N
81	D506N	82	D516N	83	D523N	84	D526N	85	D532N
86	D546N	87	D565N	88	D606N	89	D612N	90	D624N
91	D627N	92	D631N	93	D632N	94	D645N	95	D654N
96	D662N	97	D664N	98	D703N	99	D712N	100	D723N
101	D731N	102	D732N	103	D734N	104	D743N	105	D754N
106	D023I	107	D025I	108	D026I	109	D031I	110	D032I
111	D036I	112	D043I	113	D047I	114	D051I	115	D053I
116	D054I	117	D065I	118	D071I	119	D072I	120	D073I
121	D074I	122	D114I	123	D115I	124	D116I	125	D122I
126	D125I	127	D131I	128	D132I	129	D134I	130	D143I
131	D145I	132	D152I	133	D155I	134	D156I	135	D162I
136	D165I	137	D172I	138	D174I	139	D205I	140	D212I
141	D223I	142	D225I	143	D226I	144	D243I	145	D244I
146	D245I	147	D246I	148	D251I	149	D252I	150	D255I
151	D261I	152	D263I	153	D265I	154	D266I	155	D271I
156	D274I	157	D306I	158	D311I	159	D315I	160	D325I

161	D331I	162	D332I	163	D343I	164	D346I	165	D351I
166	D356I	167	D364I	168	D365I	169	D371I	170	D411I
171	D412I	172	D413I	173	D423I	174	D431I	175	D432I
176	D445I	177	D446I	178	D452I	179	D454I	180	D455I
181	D462I	182	D464I	183	D465I	184	D466I	185	D503I
186	D506I	187	D516I	188	D523I	189	D526I	190	D532I
191	D546I	192	D565I	193	D606I	194	D612I	195	D624I
196	D627I	197	D631I	198	D632I	199	D645I	200	D654I
201	D662I	202	D664I	203	D703I	204	D712I	205	D723I
206	D731I	207	D732I	208	D734I	209	D743I	210	D754I

Appendix E. - CTCSS Table

CTCSS CHART (Hz)

Number	Frequency	Number	Frequency	Number	Frequency	Number	Frequency	Number	Frequency
1	67.0	2	69.3	3	71.9	4	74.4	5	77.0
6	79.7	7	82.5	8	85.4	9	88.5	10	91.5
11	94.8	12	97.4	13	100	14	103.5	15	107.2
16	110.9	17	114.8	18	118.8	19	123.0	20	127.3
21	131.8	22	136.5	23	141.3	24	146.2	25	151.4
26	156.7	27	159.8	28	162.2	29	165.5	30	167.9
31	171.3	32	173.8	33	177.3	34	179.9	35	183.5
36	186.2	37	189.9	38	192.8	39	196.6	40	199.5
41	203.5	42	206.5	43	210.7	44	218.1	45	225.7
46	229.1	47	233.6	48	241.8	49	250.3	50	254.1

Disclaimer

The accuracy and completeness of the contents are sought in the process of compilation, but we do not bear any responsibility for the possible errors or omissions. With the continuous development of technology, we reserve the right to change the design and specification of the product without notice. No copy, modification, translation and dissemination of this handbook may be made in any form without the prior written authorization of our department.

PO FUNG ELECTRONIC (HK) INTERNATIONAL GROUP COMPANY LIMITED

ADD: Room 1508, 15/F, Office Tower II, Grand Plaza, 625 Nathan Road, Kowloon, Hong Kong

Http://www.baofengradio.com **www.pofungshop.com**

Print version: UV39_(501) V1.0