Amateur Radio

AR26 Series

USER'S MANUAL

Table of Contents

1. GETTING STARTED
1.1 Regulations and Safety Warnings
1.2 Content of the packaging
1.3 Features and Functions
2. BATTERY INFORMATION
2.1 Charging the Battery Pack
2.2 Charger Supplied
2.3 Use Caution with the Li-ion Battery
2.4 Using the Type-C Charger
2.5 Battery Maintenance
2.6 Prolonging the life of your battery
2.7 How to Store the Battery
3. PREPARATION
3.1 Installing / Removing the Battery
3.2 Installing / Removing the Antenna
3.3 Installing / Removing the Belt Clip
3.4 Installing Additional Speaker/Microphone
4. RADIO OVERVIEW
4.1 Status Indications
4.2 LCD icon summary
4.3 Main keypad controls
5. BASIC OPERATIONS
5.1 Power on the radio
5.2 Adjusting the volume
5.3 Main Band/Sub Band Switch
5.4 VFO/Channel Switch
5.5 Frequency (VFO) mode
5.6 Channel mode and Channel selection
5.7 Selecting a Bank
5.8 Making a call
5.9 Emergency Alert
5.10 FM Radio (FM)
5.11 Monitor
5.12 Keypad lock
5.13 Frequency reversal and talkaround
5.14 TX repeaters tone
5.15 One touch frequency Search
6. ADVANCED FEATURES
6.1 Scanner
6.2 Dual Watch
6.3 Manual Programming
6.4 Bluetooth write frequency
6.5 Recording function
6.6 GPS function
7. MAIN MENU FUNCTIONS
7.1 Basic use
7.2 Using short-cuts
7.3 Radio Settings
7.4 Program Channel
7.5 Radio Info
Appendix A. – Trouble shooting guide
Appendix B. - Technical Specifications
Appendix C. - Shortcut Menu operations
Appendix D. - DCS Table

1. GETTING STARTED

1.1 Regulations and Safety Warnings

EU Regulatory Conformance

As certified by the qualified laboratory, the product is in compliance with the essential requirements and other relevant provisions of the Directive 2014/53/EU. All applicable EU regulations are regarded (2006/66/EC, 2011/65/EU, (EU)2015/863, 2012/19/EU).
NOTE: It can be operating under 2000m.
WARNING ! European Users should note that operation of this unit in Transmit mode requires the operator to have a valid Amateur Radio License from their respective Countries Amateur Radio Licensing Authority for the Frequencies and Transmitter Power levels that this Radio transmits on. Failure to comply may be unlawful and liable for prosecution. At this subject, refer to the “EU” specification guide 2014/53/EU.
Please note that the above information is applicable to EU countries only.

Compliance with RF Exposure Standards

The radio complies with the following RF energy exposure standards and guidelines:
• United States Federal Communications Commission, Code of Federal Regulations; 47 CFR § 1.1307, 1.1310 and 2.1093
• American National Standards Institute (ANSI) / Institute of Electrical and Electronic Engineers (IEEE) C95.1:2005; Canada RSS102 Issue 5 March 2015
• Institute of Electrical and Electronic Engineers (IEEE) C95.1:2005 Edition

RF Exposure Compliance and Control

Guidelines and Operating Instructions

To control your exposure and ensure compliance with the Population / Uncontrolled environmental exposure limits, always adhere to the following procedures.

Guidelines:

• Do not remove the RF Exposure Label from the device.
• User awareness instructions should accompany device when transferred to other users.

• Do not use this device if the operational requirements described herein are not met.

Operating Instructions:

• Transmit no more than the rated duty factor of 50% of the time. To transmit (talk), press the Push-to-Talk (PTT) key. To receive calls, release the [PTT] key. Transmitting 50% of the time, or less, is important because the radio generates measurable RF energy only when transmitting (in terms of measuring for standards compliance).
• Keep the radio unit at least 2.5cm away from the face. Keeping the radio at the proper distance is important as RF exposure decreases with distance from the antenna. The antenna should be kept away from the face and eyes.
• When worn on the body, always place the radio in an approved holder, holster, case, or body harness or by use of the correct clip for this product. Use of non-approved accessories may result in exposure levels which exceed the FCC's occupational/ controlled environmental RF exposure limits.
• Use of non-approved antennas, batteries, and accessories causes the radio to exceed the FCC RF exposure guidelines.
• Contact your local dealer for the product's optional accessories.

■Precautions for Portable Terminals

Operating Prohibitions

To protect you against any property loss, bodily injury or even death, be sure to observe the following safety instructions:
1. Do not operate the product in a location containing fuels, chemicals, explosive atmospheres and other flammable or explosive materials. In such location, only an approved Ex-protection model is allowed for use, but any attempt to assemble or disassemble it is strictly prohibited.
2. Do not operate the product near or in any blasting area.
3. Do not operate the product near any medical or electronic equipment that is vulnerable to RF signals.
4. Do not hold the product while driving.
5. Do not operate the product in any area where use of wireless communication equipment is completely prohibited.

Important Tips

To help you make better use of the product, be sure to observe the following instructions:
1. Do not use any unauthorized or damaged accessory.
2. Keep the product at least 2.5 centimeters away from your body during transmission.
3. Do not keep the product receiving at high volume for a long time.

4. For vehicles with an air bag, do not place the product in the area over the air bag or in the air bag deployment area.
5. Keep the product and its accessories out of reach of children and pets.
6. Please operate the product within the specified temperature range.
7. Continuous transmission for a long time may lead to heat accumulation within the product. In this case, please keep it at a proper location for cooling.
8. Handle the product with care.
9. Do not disassemble, modify or repair the product and its accessories without authorization.

■Precautions for Batteries

Charging Prohibitions

To protect you against any property loss, bodily injury or even death, be sure to observe the following safety instructions:

1. Do not charge or replace your battery in a location containing fuels, chemicals, explosive atmospheres and other flammable or explosive materials.
2. Do not charge your battery that is wet. Please dry it with a soft and clean cloth prior to charge.
3. Do not charge your battery suffering deformation, leakage and overheat.
4. Do not charge your battery with an unauthorized charger.
5. Do not charge your battery in a location where strong radiation is present.
6. Overcharge shall always be prohibited for it may shorten the life of your battery.

Maintenance Instructions

To help your battery work normally or prolong its life, be sure to observe the following instructions:

1. Accumulated dust on charging connector may affect normal charging. Please use a clean and dry cloth to wipe it on a regular basis.
2. It is recommended to charge the battery under 5℃~40℃. Violation of the said limit may cause battery life reduction or even battery leakage.
3. To charge a battery attached to the product, turn it off to ensure a full charge.
4. Do not remove the battery or unplug the power cord during charging to ensure a smooth charging process.
5. Do not dispose of the battery in fire.
6. Do not expose the battery to direct sunlight for a long time nor place it close to other heating sources.
7. Do not squeeze and penetrate the battery, nor remove its housing.

Transportation Instructions

1. Damaged batteries must not be transported.
2. To avoid short circuit, separate the battery from metal pars or from each other if two or more batteries are transported in one packaging.
3. The radio must be switched off and secured against switch-on, if the battery is attached.

The content of the shipment must be declared in the shipping documents and by a Battery Shipping Label on the packaging. Contact your hauler for the local regulations and further information.

1.2 Content of the packaging

This transceiver comes shipped with the following items in the box:

- 1 Radio body
- 1 Lithium-Ion battery pack
- Instruction Manual
- 1 Belt Clip
- 1 Power Adapter
- 1 Programming Cable
- 1 Antenna
- 1 Wrist Belt

1.3 Features and Functions

- Scanning receiver frequency range: 108-136MHz, VHF 136-174MHz, 220-260MHz, UHF350-390MHz, 400-520MHz
  Transmission Frequency 144-148 & 420-450MHz (America version)

Frequency range BT:2402MHz-2480MHz

- 1.77" TFT large screen, full keyboard, fully open menu operation
- Scanner function: VFO scan range setting, three scan recovery methods, channel scan, CTC/DCS scan, scan channel addition and removal
- Built-in input method, allows this device to edit channel name
- NOAA Weather Radio Channel Reception in the United States and Canada(*North American countries and territories only)
- Frequency step, selectable between 2.5K | 5.0K | 6.25K | 10.0K | 12.5K | 20.0K | 25.0K | 50.0K
- Type-C direct charging and charging stand, more convenient battery life
- Dual-band handheld transceiver.
- High Capacity Lithium-Ion battery.
- 10 zones storage, Up to 1000 named memory channels.
- High or low power selectable.
- Function beep on the keyboard.
- One touch search frequency
- VOX (voice activated transmit).
- Broadcast FM radio receiver 76-108 MHz
- Alarm function.
- Display illumination programmable via keypad.
- Dual watch / Dual reception.
- Two (2) pins for Kenwood accessory port
- GPS positioning function, location sharing and requesting location information from others
- **Bluetooth APP application, Reade or write radio data**
- **Black box function, recorded trajectory**
- **300 hours of real-time recording, real-time clock display**

Chapter1. Getting Started

Regulations and Safety Warnings

■FCC Part15/IC Compliance

FCC Part 15 Compliance

This device complies with Part 15 of the FCC rules. Operation is subjected to the following two conditions: (1) this device may not cause harmful interference, and (2) this device must accept any interference received, including interference that may cause undesired operation.

Changes or modifications not expressly approved by the party responsible for compliance could void your authority to operate the equipment.

Avis de conformité à la FCC : Ce dispositif a été testé et s'avère conforme à l'article 15 des règlements de la Commission fédérale des communications (FCC). Ce dispositif est soumis aux conditions suivantes: 1) Ce dispositif ne doit pas causer d'interférences nuisibles et; 2) Il doit pouvoir supporter les parasites qu'il reçoit, incluant les parasites pouvant nuire à son fonctionnement.

Tout changement ou modification non approuvé expressément par la partie responsable pourrait annuler le droit à l'utilisateur de faire fonctionner cet équipement.

Note: This equipment has been tested and found to comply with the limits for a Class B digital device, pursuant to part 15 of the FCC Rules. These limits are designed to provide reasonable protection against harmful interference in a residential installation. This equipment generates, uses and can radiate radio frequency energy and, if not installed and used in accordance with the instructions, may cause harmful interference to radio communications. However, there is no guarantee that interference will not occur in a particular installation. If this equipment does cause harmful interference to radio or television reception, which can be determined by turning the equipment off and on, the user is encouraged to try to correct the interference by one or more of the following measures:

—Reorient or relocate the receiving antenna.

—Increase the separation between the equipment and receiver.

—Connect the equipment into an outlet on a circuit different from that to which the receiver is connected.

—Consult the dealer or an experienced radio/TV technician for help

MODIFICATION OF THIS DEVICE TO RECEIVE CELLULAR RADIOTELEPHONE SERVICE SIGNALS IS PROHIBITED UNDER FCC RULES AND FEDERAL LAW.

IC Compliance

This device complies with Industry Canada license-exempt RSS standard(s).Operation is subject to the following two conditions: (1) this device may not cause interference, and (2) this device must accept any interference, including interference that may cause undesired operation of the device.
Changes or modifications not expressly approved by the party responsible for compliance could void your authority to operate the equipment.
Cet appareil est conforme aux normes RSS exemptes de licences d'Industrie Canada. Son fonctionnement est soumis aux deux conditions suivantes : (1) cet appareil ne doit pas causer d'interférences nuisibles et (2), il doit pouvoir accepter les interférences, incluant celles pouvant nuire à son fonctionnement normal.
Tout changement ou modification non approuvé expressément par la partie responsable pourrait annuler le droit à l'utilisateur de faire fonctionner cet équipement.

SAR tests are conducted using standard operating positions accepted by FCC/ISEDC with the device transmitting at its highest certified power level in all tested frequency bands, although the SAR is determined at the highest certified power level, the actual SAR level of the device while operating can be well below the maximum value. Before a new model is a available for sale to the public, it must be tested and certified to the FCC/ISEDC that is does not exceed the exposure limit established by

the FCC/ISEDC. Tests for each product are performed in positions and locations as required by the FCC/ISEDC.

For body worn operation, this device has been tested and meets the FCC/ISEDC RF exposure guidelines when used with and accessory designated for this product or when used with and accessory that contains no metal.

To maintain compliance with FCC/ISEDC RF exposure guidelines hold the transmitter and antenna at least 1 inch (2.5 centimeters) from your face and speak in a normal voice, with the antenna pointed up and away from the face.

The equipment complies with FCC/ISEDC radiation exposure limits set forth for and uncontrolled environment. In order to comply with the FCC/ISEDC RF exposure requirement, the antenna installation must comply with following:

Users must be fully aware of the hazards of the exposure and able to exercise control over their RF exposure to qualify for the higher exposure limits.

Your wireless hand-held portable transceiver contains a low power transmitter. This product sends out radio frequency (RF) signals when the Push-to-Talk(PTT) button is pressed.

The device is authorized to operate at a duty factor not to exceed 50%.

2. BATTERY INFORMATION

2.1 Charging the Battery Pack

The Li-ion battery pack is not charged at the factory; please charge it before use.
Charging the battery pack for the first time after purchase or extended storage (more than 2 months) may not bring the battery pack to its normal maximum operating capacity. Best operation will require fully charging/discharging the battery two or three times before the operating capacity will reach its best performance. The battery pack life may be depleted when its operating time decreases even though it has been fully and correctly charged. If this is the case, replace the battery pack.

2.2 Charger Supplied

Please use the specified charger provided by Baofeng. Other models may cause explosion and personal injury. After installing the battery pack, and if the radio displays low battery with a red flashing lamp or voice prompt, please charge the battery.

2.3 Use Caution with the Li-ion Battery

(1) Do not short the battery terminals or throw the battery into a fire. Never attempt to remove the casing from the battery pack, as Baofeng cannot be held responsible for any accident caused by modifying the battery.
(2) The ambient temperature should be between 5℃-40℃ (40˚F - 105˚F) while charging the battery. Charging outside this range may not fully charge the battery.
(3) Please turn off the radio before inserting it into the charger. It may otherwise interfere with correct charging.
(4) To avoid interfering with the charging cycle, please do not cut off the power or remove the battery during charging until the green light is on.
(5) Do not recharge the battery pack if it is fully charged. This may shorten the life of the battery pack or damage the battery pack.
(6) Do not charge the battery or the radio if it is damp. Dry it before charging to avoid damage.

NOTICE

When keys, ornamental chain or other electric metals contact the battery terminal, the battery may become damage or injure a human. If the battery terminals are short circuited it will generate a lot of heat. Take care when carrying and using the battery. Remember to put the battery or radio into an insulated container. Do not put it into a metal container.

2.4 Using the Type-C Charger

The Type-C charger is a handy port that allows you to conveniently charge your Li-on battery pack.

(1) Make sure your radio is turned OFF.

(2) Plug the Type-C cable into the Type-C charging port on your battery. Connect the other end of the Type-C charger to wall power outlet.

(3) An empty battery will be fully charged in 6 hours.

(4) The battery indicator light illuminates to indicate that the battery is charging.

LED Indicator

Red LED	Green LED	Status
Flashing	Steady	Standby (charger empty) Error (charger with radio)
Steady	Off	Charging
Off	Steady	Charge complete.

Practical if you have two batteries. That way you can charge one battery while still using your radio.
Radio should be turned OFF during charge cycle.

2.5 Battery Maintenance

The battery for your radio comes uncharged from the factory; please let it charge for at least four to five hours before you start using your radio.

- ***Use only batteries approved by the original manufacturer.***
- ***Never attempt to disassemble your battery pack.***

- ***Do not expose your batteries to fire or intense heat***
- ***Dispose of batteries in accordance with local recycling regulations. Batteries do not belong in your trashcan!***

2.6 Prolonging the life of your battery

- Only charge batteries in normal room temperatures.
- When charging a battery attached to the radio, turn the radio off for a faster charge.
- Do not unplug the power to the charger or remove the battery and/or radio before it's finished charging.
- Never charge a wet battery.
- Batteries wear out over time. If you notice a considerably shorter operating time with your radio, please consider purchasing a new battery.
- Battery performance will be reduced in temperatures below freezing. When working in cold environments, keep a spare battery on you. Preferably inside your jacket or in a similar location in order to keep the battery warm.
- Dust can interfere with the contacts on the battery. If necessary wipe the contacts with a clean cloth to ensure proper contact with radio and charger.

If your battery has become wet, remove it from the radio, wipe it dry with a towel and put it in a plastic bag with a handful of dry rice. Tie the bag up and let it sit over night.
The rice will absorb any remaining moisture in the battery.
This method is only effective against minor splashes (light rain for instance). A soaked radio may very well be beyond repair.

2.7 How to Store the Battery

(1) If the battery needs to be stored, keep it in status of 80% discharged.
(2) It should be kept in low temperature and dry environment.
(3) Keep it away from hot places and direct sunlight.
(4) To avoid severe capacity degradation of your battery while in long-term storage, please cycle the battery at least every six (6) months.

NOTICE

- ***Do not short circuit the battery terminals.***
- ***Never attempt to remove the casing from the battery pack.***

- *Never store the battery in unsafe surroundings, as a short may cause an explosion.*
- *Do not put the battery in a hot environment or throw it into a fire, as it may cause an explosion.*

3. PREPARATION

3.1 Installing / Removing the Battery

Installing the Battery Pack

(1) Position the battery pack over the back of the radio.

(2) Engage the battery pack into the radio until battery pack is fully seated into the radio housing.

(3) Tighten the screws using a coin or at object to secure the battery pack to the radio. Do not overtighten.

To Remove Battery Pack from Radio

(1) Loosen the screws on the back of the battery pack.

(2) Lift the bottom of the battery pack slightly to remove it from the radio housing.

(3) Pull the battery pack out of the radio housing.

3.2 Installing / Removing the Antenna

(1) Installing the Antenna: Screw the antenna into the connector on the top of the transceiver by holding the antenna at its base and turning it clockwise until secure.

(2) Removing the Antenna: Turn the antenna counter-clockwise to remove it.

3.3 Installing / Removing the Belt Clip

(1) Installing the Belt Clip: Place the belt clip above the corresponding holes on the back of the radio, and screw it into place clockwise with the two supplied screws.

(2) Removing the Belt Clip: Unscrew counter-clockwise to remove the belt clip.

3.4 Installing Additional Speaker/Microphone (Optional)

Pry open the rubber MIC-Headset jack cover and then insert the Speaker / Microphone plug into the double jack.

4. RADIO OVERVIEW

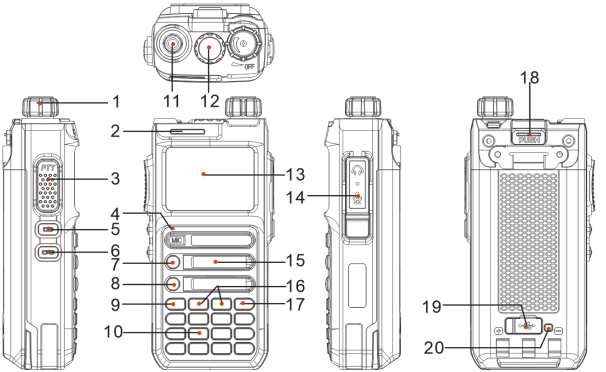

1. Power / Volume knob
2. LED Status Indicator
3. PTT key
4. MIC Input
5. SK1- VOX/ Monitor key
6. SK2 key – FM radios/Emergency key
7. V/M-VFO/MR key
8. A/B key
9. MENU key
10. Numeric keypad
11. Antenna input
12. GPS antenna
13. Color LCD
14. Speaker/Mic Jacks
15.Speaker
16. ▲ or ▼ navigation keys
17. Exit Key
18. Battery tightening screw
19. Type-C charge port
20. Type-C charge indicator

4.1 Status Indications

The top LED will help you to identify the current radio status.

LED Indication	What it Indicates
Constant Green	Receiving Signal
Constant Red	Transmitting signal
Flashes Green	Monitor mode/Scanning Receiving

4.2 LCD icon summary

Icon	Description
	Battery level indicator
	Make sure you can hear the DTMF side tone from the radio speaker, set to DT-ST, ANI-ST, DT+ANI.
D	Dual watch enabled
V	VOX enabled
	Bluetooth frequency writing function activated
	GNSS function enabled
	Keypad lock enabled
ZONE01	Indication of the current channel's region. Working in storage mode
VFO	In the current working VFO mode. Allow manual frequency input
A	A displays (upper section) and emission level indication
B	B displays (lower section) and emission level indication
SQL	Squelch Open/ Close Indicator
H	Transmit power level indicator, According to Power High
M	The current transmission power is medium power (used in normal environments).
L	Transmit power level indicator, According to Power Low
D	DCS enabled
C	CTCSS enabled
+	Enables access of repeaters in VFO/Frequency Mode. TX will be shifted higher in frequency than RX。

−	Enables access of repeaters in VFO/Frequency Mode. TX will be shifted lower in frequency than RX
R	Reverse function enabled
T	Talkaround has been activated, off grid at the central turntable. The transmission frequency is equal to the receive frequency
	The confidential calling feature is activated
N	Narrowband enabled

4.3 Main keypad controls

- key: MENU key, It is used for activating the MENU, choose each MENU selection and confirm the parameter.
  After activation the GPS position function, press and hold the key to quickly enter GPS mode.
- ▲ key: Press it for more than 2 seconds, the channel and frequency will move upwards rapidly; in SCAN mode, press this control to move the scanning upwards.
- ▼ key: Keep it pressed it for more than 2 seconds, the channel and frequency will move downwards rapidly; in SCAN mode, press this control to move the scanning downwards.
- Key: EXIT key, press to exit the Menu and functions.
  Press and hold key to activate the frequency sweep function. Realize fast group.
- **Numeric keypad**

  With these keys you can input the information or your selections on the radio.
- **Key**

  When there is a frequency difference between reception and transmission, press the key can activate the frequency reversal and talkaround functions.

  The radios features a keypad lock that locks out all keys except for the three side keys.

  To enable or disable the keypad lock, press and hold the key for about two seconds.
- **0 key**

  Press and hold the **[0]** key to activate the NoAA weather forecast reception function

- **#Z key**

  When listening to broadcast FM a momentary press will start the scanning. Scanning in broadcast FM will stop as soon as an active station is found, regardless of scanner resume method.

  To enable the scanner, press and hold the #Z key for about two seconds.

5.BASIC OPERATIONS

5.1 Power on the radio

• Turning the unit on

To turn the unit on, simply rotate the Volume/Power knob clockwise until you hear a "click". If your radio powers on correctly there should be an audible double beep after about one second and the display will show a message or flash the LCD depending on settings for about one second. Then it will display a frequency or channel. If the Voice prompt is enabled, the voice will announce "frequency mode" or "channel mode".

• Turning the unit off

Turn the Volume/Power knob counter-clock wise all the way until you hear a "click". The unit is now off.

5.2 Adjusting the volume

To turn up the volume, turn the volume/power knob clock-wise. To turn the volume down, turn the Volume/Power knob counter-clock-wise. Be careful not to turn it too far, as you may inadvertently turn your radio off.

By using the monitor function, enabled from the [VOX/ Monitor] key below the PTT, you can more easily adjust your volume by adjusting it to the un-squelched static.

5.3 Main Band/Sub Band Switch

In standby mode, press the [**A/B]** key to switch between the main frequency band or sub frequency bands.

The highlighted frequency band is the main frequency band, and the dimmed frequency band is the sub frequency band.

5.4 VFO/Channel Switch

Press the [**V/M**] key to switch between VFO and channel display.

• In channel mode (MR), the channel number will be displayed.

• In frequency mode (VFO), the **VFO** will be displayed.

5.5 Frequency (VFO) mode

In Frequency (VFO) mode you can navigate up and down the band by using the ▲ or ▼ keys. Each press will increment or decrement your frequency according to the frequency step you've set your transceiver to.

You can also input frequencies directly on your numeric keypad with kilohertz accuracy.

The following example assumes the use of a 12.5 kHz frequency step.

Example. Entering the frequency 436.61250 MHz on display *A*

(1) In standby mode, press the [**V/M**] key to switch to the frequency (VFO) mode.

(2) Enter **[4][3][6][6][1][2][5] [0]** on the numeric keypad.

WARNING!

Just because you can program in a channel does not mean you're automatically authorized to use that frequency. Transmitting on frequencies you're not authorized to operate on is illegal, and in most jurisdictions a serious offence. However, it is legal in most jurisdictions to listen. Contact your local regulatory body for further information on what laws, rules and regulations apply to your area.

5.6 Channel (MR) mode and Channel selection

There are two modes of operation: Frequency (VFO) mode, and Channel or Memory (MR) mode.

For everyday use, Channel (MR) mode is going to be a whole lot more practical than Frequency (VFO) mode. However, Frequency (VFO) mode is very handy for experimentation out in the field. Frequency (VFO) mode is also used for programming channels into memory.

In Channel (MR) mode you can navigate up and down the channel by using the ▲ or ▼ keys or the encoder.

Ultimately which mode you end up using will depend entirely on your use case.

Press [**V/M**] key to switch the radio between VFO and Channel mode, select Channel mode.

• **Operation 1**: Press the ▲ or ▼ navigation key to select the channel.
• **Operation 2**: Input the channel numbers by the keyboard. For example, if you want switch to channel 12, input [0][1][2] a total of 3 digits, and it will switch to channel 12.

When the voice prompt function is enabled, the corresponding channel will be broadcast by voice.

5.7 Selecting a Bank

A bank is a group of channels with the same property. The radio supports up to 10 banks, with a maximum of 100 channels per bank. To select a bank, do one of the following:

Press ▬ key go to Menu > Bank, press ▲ or ▼ navigation key to select a bank, and then press ▬ key to switch to the selected bank.

The corresponding regional alias will be displayed at the bottom of the screen.

5.8 Making a call

NOTE: Press the A/B key to switch the main channel to the other channel if there are 2 channels shown on the display. In standby mode, press the [V/M] key to switch between frequency (VFO) mode and channel (MR) mode.

• **Channel mode call**: After selecting a channel, hold down the **[PTT]** key to initiate a call to the current channel. Speak into the microphone with normal tone. Making a call, the red LED is on.
• **Frequency mode call**: Press [**V/M]** key to switch to the frequency mode, input the working frequency within the allowable frequency range, and press and hold the **[PTT]** key to transmit on the current frequency. Speak into the microphone with normal tone. Making a call, the red LED is on.
• **Receive a call**: When you release the **[PTT]** key, you can answer it without any action.
When receiving a call, the green LED is on.

NOTE: To ensure the best reception volume, keep the distance between the microphone and the mouth at the time of transmission from 2.5 cm to 5 cm.

5.9 Emergency Alert

The Emergency Alert feature can be used to signal members in your group for help.

To activate the emergency alert function, press and hold the **[SK2]** key for 3 seconds. The radio will send out a loud siren sound and the flashlight will flash.

Press the **SK2 (FM radios/Emergency)** key to exit the emergency alert function.

WARNING: The Emergency Alert feature should only be used in the even of an actual emergency.

5.10 FM Radio (FM)

The frequency ranges to listen to the radio is 65-108MHz. When listening to broadcast FM, press key switches between 65-75 MHz and 76-108 MHz band.

(1) In frequency or channel mode, Press **[SK2]** key to turn on the radio.

(2) Select the desired radio frequency with the ▲ or ▼ keys or input the frequency. Or

- Press to automatically search a radio station.

(3) Press **[SK2]** key to exit FM radio.

Note: while you are listening to the radio, the frequency or channel of A / B receiving signal will automatically switch to the frequency or channel mode for normal transmitting and receiving.

When the signal disappears the radio will automatically switch again to FM radio mode.

5.11 Monitor

In standby, press and hold the [**SK1**] key to enter Monitor. When receiving matched carrier but the signaling or the signal is too weak, this function allows monitor the weak signal.

Stop pressing the **[SK1]** key to turn off the speakers and return to standby mode.

» If no signal, it will emit noise when press the [SK1] Key.

5.12 Keypad lock

The radio features a keypad lock that locks out all keys except for the three side keys.

To enable or disable the keypad lock, press and hold the key for about two seconds.

You can also enable so that the radio automatically locks the keypad after ten seconds from the menu.

5.13 Frequency reversal and talkaround

When there is a frequency difference between the receiving frequency and the transmitting frequency, the radios operates in relay mode.

A short momentary press of the key enables the reverse function

If you for some reason want to listen to the repeater's input frequency instead, press ★ key momentarily and you'll reverse your transmit and receive frequencies. The channel attribute bar will display R

Press the ★ key again to switch the radio to talkaround mode, and the receiving frequency is equal to the transmitting frequency. The channel attribute bar will display T.

5.14 TX Repeaters tone

Press **[PTT] +** [**SK1**] key to send 1750Hz repeaters tone. This function is useful for communications through repeaters.

If you have the keypad lock enabled on your radio, you can still send a 1750Hz tone the regular way without having to unlock your radio.

5.15 One touch frequency Search

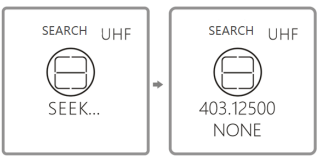

(1) The radio will act as a receiver. Press and hold the key, and the screen will display "**SEARCH SEARCH**..."

(2) If the transmitter continues to transmit and the unit receives an effective frequency (the strongest and stable signal), the received frequency will be displayed. If there is a CTCSS or DCS, the CTCSS or DCS value is displayed, and if there is no CTCSS or DCS, NONE is displayed

(3) You can press the key to save the Search frequency and CTCSS or DCS to the channel.

Note: During frequency Search, press the # key on the radio to switch between UHF or VHF bands.

6. ADVANCED FEATURES

6.1 Scanner

The radios features a built in scanner for the VHF and UHF bands. When in Frequency (VFO) mode it will scan in steps according to your set frequency step. In Channel (MR) mode it will scan your channels.
To enable the scanner, press and hold the #z key for about two seconds. You can change the scanning direction with the ▲ or ▼ keys. Press and hold the #z key to exit scanning mode.

6.1.1 Frequency Ranger

In frequency mode, the frequency sweep range can be precisely set. Input the start value and end value of the sweep frequency through the keyboard.
EX: Enter 144146, in frequency mode, scan in the range of 144.000-146.000MHZ. Enter 430440, in frequency mode, scan in the range of 430.000-440.000MHZ.
Note: for VFO frequency Ranger, see Menu>SCAN>Freq Ranger.

6.1.2 Scan modes

The scanner is configurable to one of three ways of operation: Time, carrier or search, each of which is explained in further details in their respective section below.
Time operation
In Time Operation (TO) mode, the scanner stops when it detects a signal, and after a factory preset time out, it resumes scanning.
Carrier operation
In Carrier Operation (CO) mode, the scanner stops when it detects a signal, and after a factory preset time with no signal it resumes scanning.

Search operation

In Search Operation (SE) mode, the scanner stops when it detects a signal.

To resume scanning you must press and hold the #2 key again.

Note: for Scan mode, see Menu>SCAN>Scan Mode.

6.1.3 Scan Sub-Code

To search for a CTCSS code, do the following:

(1) In VFO mode, enter a known frequency, such as 144.525.

(2) Press key to enter menu>>Scan>>3 Scan Sub-Code.

(3) Press ▲ or ▼ to select CTCSS;

(4) Press the key to enter the CTCSS code, and scan the CTCSS code in sequence. When a valid CTCSS code is scanned, it stays on the CTCSS code and the speaker is turned on.

(5) Press the key to store the scanned CTCSS code and exit the scan to return to the previous menu. In standby mode, the C icon will be displayed on the top line of the screen. Press and hold the **PTT** key to make a callback.

To search for a DCS code, do the following:

(1) In VFO mode, enter a known frequency, such as 144.525.

(1) Press key to enter menu>>Scan>>3 Scan Sub-Code.

(2) Press ▲ or ▼ to select DCS;

(3) Press the key to enter the DCS code scanning, and scan the DCS code in turn. When a valid DCS code is scanned, it stays on the DCS code and the speaker is turned on.

(4) Press the key to store the scanned DCS code and exit the scan to return to the previous menu. In standby mode, the D icon will be displayed on the top line of the screen. Press and hold the **PTT** key to make a callback.

6.1.4 Sub-Code scan storage

In MR mode or VFO mode, the scanned CTCSS/DCS code can be stored as only TX CTCSS/DCS code, RX CTCSS/DCS code only,

TX and RX CTCSS/DCS code to replace the CTCSS/DCS code setting of the current channel or frequency mode of the radio.
To save the settings of CTCSS/DCS code scan, the operation is as follows:
(1) Press key to enter menu >> SCAN >> 4 Scan Memory.
(2) Press the key to enter the Scan Memory setting, and press the ▲ or ▼ key to select:

- **ALL**: The scanned CTCSS/DCS code will be stored as the received and transmitted CTCSS/DCS code of the current channel or frequency mode (at the same time as the received and transmitted Sub-Code).
- **DECODER**: The scanned CTCSS/DCS code will be stored as the receiver CTCSS/DCS code of the current channel or frequency mode (only replace its receiver RX CTC/DCS).
- **ENCODER**: The scanned CTCSS/DCS code will be stored as the transmitted CTCSS/DCS code of the current channel or frequency mode (only replace its transmitted TX CTC/DCS).

(3) Press the key to save the settings and return to the previous menu;
Note: Only when a valid CTCSS/DCS code is scanned and stopped, press the key to store the CTCSS/DCS code and replace the corresponding CTCSS/DCS code of the current channel or frequency.

*6.2*Dual Watch

In certain situations, the ability to monitor two channels at once can be a valuable asset. This can be achieved in one of two ways. You can either have one receiver in your radio and flip-flop between two frequencies at a fixed interval (known as Dual Watch), or you can equip a radio with two receivers (known as Dual Receive or Dual VFO). The former method is cheaper to implement and far more common than the latter.
The radio features Dual Watch functionality (single receiver) with the ability to lock the transmit frequency to one of the two channels it monitors.
Enabling or disabling Dual Watch mode
(1) Press the key to enter the main menu.
(2) Enter 5 on the numeric keypad to get to Radio Settings.
(3) Press the key to confirm, enter 16 on the numeric keypad to get to 16 Dual Watch.

(4) Press the key to select.
(5) Use the ▲ or ▼ keys to OFF or ON.
(6) Press the key to confirm.
(7) Press to return to the previous menu.

The dual watch function is turned on, and the icon Ⓓ is displayed on the top line of the screen.

• Repeat the above operation, select "OFF", the dual watch function is disabled, and the icon Ⓓ on the top line of the screen disappears.

6.3 Manual Programming (Channels Memory)

Memory channels are an easy way to store commonly used frequencies so that they can easily be retrieved at a later date. The radio has 10 zones, with a maximum of 100 channels stored in each zone. Each channel can store: Receive and transmit frequencies, transmit power, group signaling information, bandwidth, ANI/ PTT-ID settings and a six character alphanumeric identifier or channel name [1] .

Frequency Mode vs. Channel Mode

In standby mode, press **V/M** key to switch between frequency (VFO) mode and channel (MR) mode.
These two modes have different functions and are often confused.

Frequency Mode (VFO): Used for a temporary frequency assignment, such as a test frequency or quick field programming if permitted.

Channel Mode (MR): Used for selecting preprogrammed channels.

Ex 1. Programming a Channel Repeater Offset with CTCSS Tone

EXAMPLE New memory in Channel 10:
RX = 432.55000 MHz
TX = 437.55000 MHz (This is a (+ 5) Offset)
TX CTCSS tone 123.0

(1) Press the key to switch between menus.

(2) Press **V/M** key to set the radio to VFO mode, and the VFO icon is displayed.

(3) [6] [1][3] [1] [0] *Deletes Prior Data in channel (Ex. 10)*

(4) [6] [4] 123.0 *Selects desired RX encode tone (Ex 123 CTCSS)*

(5) [6] [6] 123.0 *Selects desired TX encode tone (Ex 123 CTCSS)*

(6) [6] [1][0] [0] [0] [5] [0] [0] *Enter the OFFSET frequency (Ex. 5.00MHz)*

(7) [6] [1][1] [+] *Select the offset direction (Ex. plus offset)*

(8) Enter RX frequency (Ex. 43255000) *Enter RX frequency (Ex. 43255000)*

(9) [6] [1][2] [1][0] *Enter the same channel (Ex 10)*

-->> *Channel has been added*

(10) Press **V/M** key to return to the MR mode and the channel number will reappear.

Ex 2. Programming a Simplex Channel with CTCSS tone

EXAMPLE New memory in Channel 10:

RX = 432.6500 MHz

TX CTCSS tone 123.0

(1) Press the key to switch between menus.

(2) Press V/M key to set the radio to VFO mode, and the VFO icon is displayed.

(3) [6] [1] [3] [1] [0] *Deletes Prior Data in channel (Ex. 10)*

(4) [6] [4] 123.0 *Selects desired RX encode tone (Ex 123 CTCSS)*

(5) [6] [6] 123.0 *Selects desired TX encode tone (Ex 123 CTCSS)*

(6) Enter RX frequency (Ex. 43265000) *Enter RX frequency (Ex. 43265000)*

(7) [6] [1][2] [1][0] *Enter the same channel (Ex 10)*

-->> *Channel has been added*

(8) Press **V/M** key to return to the MR mode and the channel number will reappear.

6.11 Repeaters Programming

The following instructions assume that you know what transmit and receive frequencies your repeater employs, and that

you're authorized to use it.

(1) Press **V/M** key, the transceiver is set to VFO mode, and the VFO icon will be displayed on the right.

(2) Use the numeric keypad to enter the repeater's output (your receive) frequency.

(3) Press [6] [1][0] to get the offset frequency.

(4) Use the numeric keypad to enter the specified frequency offset.

(5) Press to confirm and save.

(6) Press [6] [1][1] to get the offset direction.

(7) Use the ▲ or ▼ keys to select plus (positive) or minus (negative) offset.

(8) Press to confirm and save.

(9) Optional:

a) Save to memory, see the section called “Manual programming” for details.

b) Set up CTCSS; see the section called “CTCSS” for details.

(10) Press to exit the menu. If everything went well, you should be able to make a test call through the repeater.

NOTE:

If you're experiencing problems making a connection to the repeater, check your settings and/or go through the procedure again.

Certain Amateur Radio repeaters (especially in Europe) use a 1750Hz tone burst to open up the repeater. To see how this is done with the radios, see the section called “1750Hz Tone-burst”.

If you're still unable to make a connection, contact the person in charge of the radio system with your employer or your local amateur radio club, as the case may be.

6.4 Bluetooth write frequency

You can read and write frequency through Bluetooth. Before performing Bluetooth read and write frequency, you need to install an APP program.

The operation of the radio is as follows:

1. Press + [3] to enter Bluetooth.

2. Press the ▲ or ▼ keys to select "ON";
The first line of the screen will display icons.

6.5 Recording function

Optional features that require hardware support
You can view, play, or delete all records one by one through the record menu.

Records List

Set path: +[7] + to enter the Records List.
Press the ▲ or ▼ key to view the records entry.
During the viewer process, press to play the records.

In the records entry, TX represents the transmitted records and RX represents the received records.

The records in VFO mode will record the transmission frequency; the records in channel mode (MR mode) will record the channel name.

More records management can be achieved through the "Other Tools - Records" section of the CPS program software.

6.6 GPS function

Optional features that require hardware support.
The position system is a typical DTMF calling application. For the method of setting call codes, call names, and local IDs, please refer to "Signaling Calls".
It is necessary to ensure that the radios that receive and send GPS location information operate on the same frequency or channel, and are set to the main frequency band.
In GPS mode, you can only view location information and cannot make normal calls. Voice intercom must exit GPS mode in order to proceed.
You can set the system time, GPS on/off, time zone, and GPS mode through the position system menu. Press and hold key to view, share, and request location information.

·Date and time settings

Set path: ▬ + 4 + ▬ + 1: Enter hours and minutes. Year, month, day.

*Once GPS position is successful, the system will automatically synchronize and update the system time.

·GPS on/off settings

Set path: ▬ + 4 + ▬ + 2: Press the ▲/▼ key to select whether to turn GPS on/off.

*After turning on the position system, the screen displays the icon

·Time zone settings:

Set path: ▬ + 4 + ▬ + 3: Press the ▲/▼ key to select the correct time zone.

·GPS mode settings

This machine is equipped with a multi-mode GPS module, mainly including GPS from the United States and Beidou from China.

Set path: ▬ + 4 + ▬ + 4: Press the ▲/▼ key to select GPS mode (Beidou, GPS, or GPS+Beidou).

Use of GPS

In standby mode, press and hold ▬ key to enter GPS mode and display "My Place" as an information list. Press ▬ key to switch My Place in the information list mode or electronic compass mode. Press the ▲/▼ key to switch the information of the selected member. The current member sequence will be displayed at the top of the interface.

Find My Place

1. Press and hold ▬ key to enter GPS mode.
2. Use the ▲/▼ key to switch to "My Place".
3. At this point, the GPS is in receive mode and displays "**Searching...**" The GPS character on the right is red, indicating that the positioning has not been successful.

Note: If "Searching..." is displayed for a long time, it is recommended that you search for satellites in an open location.

4. Display "Searching Successful" to indicate that the radios position has been successfully obtained, and display the current time, longitude, latitude, and altitude, Where N is north latitude, E is east longitude, and H is height. The GPS character on

the right is green.
5. Press the MENU key to switch between the GPS position information interface and the GPS distance direction interface.

Share My Place information (send to others)

1. After the GPS position of the radio is successful, press the key to switch to the location information interface.
2. Press the ▲/▼ key to select the pre programmed member sequence (01-20), and display the member sequence and name on the first line. Select the member sequence labeled as "native".
3. Press the [PTT] key to share the current location information of the device with group members.

Requesting someone else's place

1. After the GPS position of the radios is successful, press the key to switch to the My Place information interface.
2. Press the ▲/▼ key to select the pre programmed member sequence (01-20), and display the sequence and call name on the first line. Select member sequences that are not marked as "native".
3. Press the [PTT] key to initiate a position request command to the target member.
-Disable transmission during waiting for reception.
-If the other party receives your request, they will reply with your location information.
-The red center point represents your position, the flashing red dot within the circle represents the position of the other side, and the bottom left corner is the reference distance between two radios.

7. MAIN MENU FUNCTIONS

The menu function allows you to perform operations such as selecting BANKS, SCAN, Bluetooth, GNSS, Radio Settings, Program Channels, Recording and Radio Information.

7.1 Basic use

Use menus with arrow keys
(1) Press the key to enter the main menu.

(2) Use the ▲ or ▼ keys to navigate between menu items.
(3) After finding the desired next menu item, press the key again to select the menu item.
(4) Use the ▲ or ▼ keys to navigate between the next menu items.
(5) After finding the desired next menu item, press the key again to select the menu item.
(6) Use the ▲ or ▼ keys to select the desired parameter.
(7) When you have selected the parameter to be set for a given menu item;
(8) To confirm your selection, press and it will save your setting and bring you back to the main menu.
(9) To cancel your changes, press and it will reset that menu item and bring you out of the menu entirely.
(10) To exit out of the menu at any time, press the **PTT** key.

7.2 Using short-cuts

As you may have noticed if you looked at Appendix C, Menu definitions, every menu item has a numerical value associated with it. These numbers can be used for direct access of any given menu item.
Using the menu with short-cuts
(1) Press the key to enter the menu.
(2) Use the numerical keypad to enter the number of the menu item.
(3) To enter the menu item, press the key.
(4) For entering the desired parameter you have two options:
  a) Use the arrow keys as we did in the previous section; or
  b) Use the numerical keypad to enter the numerical short-cut code.
(5) And just as in the previous section;
  a) To confirm your selection, press and it will save your setting and bring you back to the main menu.
  b) To cancel your changes, press and it will reset that menu item and bring you out of the menu entirely.
(6) To exit out of the menu at any time, press the key.
(7) All further examples and procedures in this manual will use the numerical menu short-cuts.

·▬+1: Quickly enter zones selection, with up to 10 zones stored, each zone store 100 channels;
·▬+2: Quickly enter the scaner settings, you will be able to set the VFO scan range, scan recovery method, ctcss/DCS scan;
·▬+3: Quickly enter Bluetooth frequency write, you will be able to set the Bluetooth frequency write switch;
·▬+4: Quickly enter the position system, and you will be able to set the system time, position on/off, time zone, and position mode.
·▬+5: Quickly enter the radio settings (overall walkie talkie settings);
·▬+6: Quickly enter channel configuration (current channel alias, frequency, power, bandwidth, display mode, channel memory and channel delete);
·▬+7: Quickly enter the record menu, and you will be able to view, play, and delete the record list.
·▬+8: Quickly query radio information (Radio ID, Firmware version, Hardware version);

Appendix A. – Trouble shooting guide

Phenomena	Analysis	Solution
You cannot turn on the radio.	The battery may be installed improperly.	Remove and reattach the battery.
	The battery power may run out.	Recharge or replace the battery.
	The battery may suffer from poor contact caused by dirty or damaged battery contacts.	Clean the battery contacts or replace the battery.
During receiving, the voice is weak or intermittent.	The battery voltage maybe low.	Recharge or replace the battery.
	The volume level may be low.	Increase the volume.
	The antenna maybe loose or maybe installed incorrectly.	Turnoff the radio, and then remove and reattach the antenna.
	The speaker maybe blocked.	Clean the surface of the speaker.
You cannot communicate with other group members.	The frequency or signaling type maybe inconsistent with that of other members.	Verify that your TX/RX frequency and signaling type are correct.
	You may be too far away from other members.	Move towards other members.
You hear unknown voices or noise.	You may be interrupted by radios using the same frequency.	Change the frequency, or adjust the squelch level.
	The radio in analog mode maybe set with no signaling.	Request your dealer to set signaling for the current channel to avoid interference
You are unable to hear anyone because of too much noise and hiss.	You may be too far away from other members.	Move towards other members.
	You may be in an unfavorable position. For example, your communication may be blocked by high buildings or blocked in an underground area.	Move to an open and flat area, restart the radio, and try again.
	It may be the result of external disturbance (such as electromagnetic interference).	Stay away from equipment that may cause interference.
The radio keeps transmitting.	VOX may be turned on or the headset is not installed in place	Turn off the VOX function. Check that the headphones are in place.

NOTE: If the above solutions cannot fix your problems, or you may have some other queries, please contact your dealer for more technical support.

Appendix B. - Technical Specifications

GENERAL	
Channel Capacity	1000/10 Bank
Channel Spacing	25.0 KHz/12.5 KHz
Input Voltage	DC 7.4V from battery or DC 5V from Adapter
Battery Life: 5% TX, 5% RX, 90% Standby	Li-on: 15 hours @ 5 watts
Operating temperature	0˚C to 40˚C
Antenna Impedance	50Ω
Radio Dimensions	137mm X 65mm X 39mm (not including antenna)
Radio Weight	310 g (with Li-ON battery)
TRANSMITTER	
Frequency Range (TX)	144 to 148 MHz, 420 to 450 MHz (America version)
Modulation	16K0F3E/11K0F3E
Spurious Emission	-16 dBm<1GHz, -16 dBm>1GHz
Frequency Stability	±2.5 ppm
Audio Distortion	≤5%
FM Hum & Noise	40 dB
RECEIVER	
Frequency Range	FM76-108MHz VHF: 108-136MHz,136-174 MHz; 220-260MHz; UHF:350-390MHz; 400- 520 MHz;
Sensitivity: 12 dB SINAD	-120 dBm
Adjacent Channel Selectivity	-60 dBm
Intermodulation and Rejection	-70 dBm
Rated Audio Power Output	0.75 Watts @ 16 Ω
Rated Audio Distortion	≤5%

NOTE: All specifications may be modified without prior notice or liability. Thank you.

Frequency range BT:2402MHz~2480MHz

Appendix C. - Shortcut Menu operations

Menu		Name		Setting	Description
1	BANK	1	BANK 1	Channel1-Channel100	A Bank is a group of channels grouped together. The radio has 10 Banks. A Bank can have the maximum of 100 channels.
2	SCAN	1	Freq Ranger	NNNNnnn	Input VFO range lower and upper frequency
		2	Scan Mode	Time	Time Operation - scanning will resume after a fixed time has passed
				Carrier	Carrier Operation -scanning will resume after the signal disappears
				Search	Search Operation -scanning will not resume
		3	Scan SubCode	CTCSS	Search within CTCSS Tone (Rang 67-254.1, A total of 50 groups)
				DCS	Search within DCS Code (Rang 023N-754I, A total of 210 groups)
		4	Scan Memory	ALL	RX_TX are saved (default is all, encoding and decoding are the same)
				DECODER	Save only in Transmitter CTCSS/DCS
				ENCODER	Save only in Receiver CTCSS/DCS
3	Radio Setting	1	Step	2.5-100K	Selects the amount of frequency change in VFO/Frequency mode when scanning or pressing the ▲ or ▼ keys.
		2	Squelch	OFF,LEVEL1-LEVEL5	Squelch silences the receiver when there is no signal. Setting the squelch to 0 will open up the squelch entirely.
		3	Power Save	OFF	Turn off radio sleep. The battery consumption is large, and the standby time may be shortened
				ON	Turn on radio sleep. Turning on is more power efficient, but you might miss the first few syllables before the RX turns on.
		4	VOX Switch	OFF	Turn off the radio VOX.
				ON	Turn on the radio VOX.
		5	VOX Level	LEVEL1-LEVEL9	When enabled it is not necessary to push the **[PTT]** button on the transceiver. Adjust the gain level to an appropriate sensitivity to allow smooth transmission.

6	VOX Delay	0.5……2.0s	When the VOX is enabled, set up the VOX delay to help to extend the transmission time to avoid stopping a transmission too early. 0.5s-2s, Step 0.1 second. a total of 16 times offered.
7	TOT	OFF	Allow continuous launch, launch time is not limited
		15;30;45…180	Maximum allowed time for transmission while holding down the **PTT** key.
8	TOA	OFF	Disable TOA function
		1……10	Activate TOA function. Range 0 – 10 seconds, Step 1 second.
9	Voice	OFF	Disable voice prompts
		ON	Activate voice prompts
10	Language	Chinese	Display menus and voice prompts in Chinese language
		English	Display menus and voice prompts in English language
11	ROGER	OFF	Disable ROGER function. Release **PTT** key without ROGER audio.
		ON	Activate the ROGER function. Sends an end-of-transmission tone to indicate to other stations that the transmission has ended.
12	Beep	OFF	Disable key confirmation tone.
		ON	Activation key to confirm tone. Allows audible confirmation of a key press
13	BackLight	ALWAYS ON	The backlight is always on.
		5……20	Set the backlight off time in no-operation delay time. 5-20, step value is 5.
14	Power on Display	PICTURE	Show preset picture when radio is on
		VOLTAGE	Display battery voltage when radio is on
15	CH-MDF	NAME	MR/Channel mode is displayed in NAME format. Note: NAME allows CPS program or edit in the channel name.
		FREQ	MR/Channel mode is displayed in frequency format.
		CH	MR/Channel mode is displayed in CH format.
16	Dual Watch	OFF	Disable dual table, dual receive.
		ON	Monitor [A] and [B] at the same time. The display with the most recent activity ([A] or [B]) becomes the selected display.
17	AutoLock	OFF	Disable automatic keypad lock. Allow manual keypad lock (press and hold the ★ key to lock/unlock the keyboard)
		ON	When ON, the keypad will be locked if not used in 8 seconds. Pressing the ★ key for 2 seconds will unlock the keypad.
18	Alarm Mode	On Site	Sounds alarm through your radio speaker only
		Send Sound	Transmits a cycling tone over-the-air

				Send Code	Transmits '119' (911 in reverse) followed by the ANI code over-the-air
		19	Alarm Tone	OFF	The radio speaker blocks the alarm sound.
				ON	The radio speaker sounds an alarm
		20	ANI-Edit	100	View the ANI ID, and if necessary, will allow to change the ANI ID
		21	DTMF-ST	OFF	No DTMF Side Tones are heard
				DT-ST	Side Tones are heard only from manually keyed DTMF codes
				ANI-ST	Side Tones are heard only from automatically keyed DTMF codes
				DT+ANI	All DTMF Side Tones are heard
		22	PTT-ID	OFF	No ID is sent.
				BOT	The selected S-CODE is sent at the beginning
				EOT	The selected S-CODE is sent at the ending
				BOTH	The selected S-CODE is sent at the beginning and ending
		23	PTT-DLY	100-3000ms	Signal code sending delay. PTT-ID Delay (milliseconds)
		24	ALERT	1000Hz	The following configurations will transmit accordingly: **PTT** + = Transmits 1000Hz Tone Burst
				1450Hz	**PTT** + = Transmits 1450Hz Tone Burst
				1750Hz	**PTT** + = Transmits 1750Hz Tone Burst
				2100Hz	**PTT** + = Transmits 2100Hz Tone Burst
		25	TAIL	OFF	Disable Squelch Tail Elimination.
				ON	Enable Squelch tail elimination. to prevent any squelch tails from being heard.
		26	Menu Exit time	5-60S	After entering the menu, start the menu reset timer. If there are no panel keys, PTT keys, or menu related programmable key operations before the timer overflows, exit the menu.
		27	Reset	VFO	Reset the radio's VFO menu to factory defaults (no reset for bank, scan settings)
				ALL	Resets the radio to factory defaults, with some exceptions.
4	GNSS	1	Time and Date	Time	HHMM. Position successful, system time will be automatically updated
				Date	YYYYMMDD. Position successful, system time will be automatically updated
		2	GPS On/Off	OFF	Turn off the position system, long press the MENU key is ineffective

				ON	Turn on the position system, press and hold the MENU key to enter GPS mode
		3	Time Zone	-12 to 0 to + 12	Set the time zone of the region
		4	GPS Mode	GPS	
				BDS	
				GPS+BDS	
5	Program Channel	1	CH.NAME	Channel 1	View channel name, allows to rename the current channel. Press the #z key to switch the input method, allowing the input of letters, numbers and symbols.
		2	RX Frequency		View the current channel Receiver frequency, allow to change the current frequency. Input the RX frequency by keypad, click the Menu key to save
		3	TX Frequency		View the current channel Transmitter frequency, allow to change the current frequency. Input the TX frequency by keypad, click the Menu key to save
		4	Trans Power		Selects between HIGH transmitter power when in VFO/Frequency mode.
		5	Bandwidth	Wide	Wideband (25 kHz bandwidth)
				Narrow	narrowband (12.5 kHz bandwidth)
		6	RX CTCSS	OFF;67-254.1	Mutes the speaker of the transceiver in the absence of a specific and continuous sub-audible signal. If the station you are listening to does not transmit this specific and continuous signal, you will not hear anything.
		7	RX DCS	OFF;023N-754I	Mutes the speaker of the transceiver in the absence of a specific low-level digital signal. If the station you are listening to does not transmit this specific signal, you will not hear anything.
		8	TX CTCSS	OFF;67-254	Transmits a specific and continuous sub audible signal to unlock the squelch of a distant receiver (usually a repeater).
		9	TX DCS	OFF;023N-754I	Transmits a specific low-level digital signal to unlock the squelch of a distant receiver (usually a repeater).

		10	Encryption	OFF	Disable encrypted mode, your conversations are not private.
				ON	Activating encryption mode ensures the privacy of your conversations. To use the Encryption function, the other part of the radio must also have Encryption activated and must be tuned on the same DCS code.
		11	SCAN ADD	OFF	Forbid the current channel to join the scan group.
				ON	Add the current channel to the scan group.
		12	Busy Lockout	OFF	The [**PTT**] button on the channel is always allowed.
				ON	Disables the [**PTT**] button on a channel that is already in use. The transceiver will sound a beep tone and will not transmit if the [**PTT**] button is pressed when a channel is already in use.
		13	CH_Memory	CH001-CH100	This menu is used to either create new or modify existing channels (1 through 100) so that they can be accessed from MR/Channel Mode.
		14	CH_Delete	CH001-CH100	This menu is used to delete the programmed information from the specified channel (1 through 100) so that it can either be programmed again or be left empty.
		11	OffSet	00.000-99.999	Specifies the difference between the TX and RX frequencies
		12	Direction	None	TX = RX (simplex). Disable access to repeaters in VFO/Frequency mode
				Plus	Plus frequency shift direction. TX will be shifted higher in frequency than RX
				Minus	Minus frequency shift direction. TX will be shifted lower in frequency than RX
7	Recording	1	Recording List		View the recording list, press the MENU key to play locally
		2	Delete All		Delete all recordings.
8	Radio Info	Radio ID\Firmware\Hardware			Displays radio ID, firmware version, hardware version. to check the radio information.

EU Declaration of Conformity

Baofeng and Pofung hereby declares that the radio equipment type listed in Technical Specifications is in compliance with Directive 2014/53/EU. The full text of the EU Declaration of Conformity is available at the following link: http://www.pofung.cn/download.asp?EnBigClassName=EU%20DOC. Via your local Baofeng helpdesk, your dealer from where you purchased this radio or send an email to wangjianhui@baofengradio.com.

Déclaration de conformité

Baofeng et Pofung déclarent par la présente que le type d'équipement radio répertorié dans les spécifications techniques est

conforme à la directive 2014/53/EU. Le texte intégral de la déclaration de conformité de l'UE est disponible sur le lien suivant: http://www.pofung.cn/download.asp?EnBigClassName=EU%20DOC. Via votre service d'assistance Baofeng local, votre revendeur chez qui vous avez acheté cette radio ou envoyez un e-mail à wangjianhui@baofengradio.com.

Declaración de conformidad

Baofeng y Pofung declaran por la presente que el tipo de equipo de radio que figura en las Especificaciones técnicas cumple con la Directiva 2014/53 / EU. El texto completo de la Declaración de conformidad de la UE está disponible en el siguiente enlace: http://www.pofung.cn/download.asp?EnBigClassName=EU%20DOC. A través de su servicio de ayuda local de Baofeng, su distribuidor donde compró esta radio o envíe un correo electrónico a wangjianhui@baofengradio.com.

Konformitätserklärung

Hiermit erklärt Baofeng und Pofung, dass der in den Technischen Spezifikationen aufgeführte Funkanlagentyp der Richtlinie 2014/53/EU entspricht. Den vollständigen Text der EU-Konformitätserklärung finden Sie unter folgendem Link: http://www.pofung.cn/download.asp?EnBigClassName=EU%20DOC. Über Ihren örtlichen Baofeng-Helpdesk, Ihren Händler, bei dem Sie dieses Radio gekauft haben, oder senden Sie eine E-Mail an wangjianhui@baofengradio.com.

Dichiarazione di conformità

Baofeng e Pofung dichiarano con la presente che il tipo di apparecchiatura radio elencato nelle Specifiche Tecniche è conforme alla Direttiva 2014/53/EU. Il testo completo della Dichiarazione di Conformità UE è disponibile al seguente link: http://www.pofung.cn/download.asp?EnBigClassName=EU%20DOC. Tramite il tuo helpdesk Baofeng locale, il tuo rivenditore da cui hai acquistato questa radio o invia un'e-mail a wangjianhui@baofengradio.com.

ATTENTION: conditions of use!

The band of frequencies on which this device operates is administrated by limitations and/or permissions for their usage. Consequently, in the EU Countries mentioned in the sheet, operators must consult the entrusted authorities. In particular, they must possess a license or a frequency assigned to them by their respective competent authority.

ACHTUNG: Nutzungsbedingungen!

Das Frequenzband, auf dem dieses Gerät betrieben wird, wird durch Beschränkungen und/oder Genehmigungen für deren Nutzung verwaltet. Folglich müssen die Betreiber in den im Blatt genannten EU-Ländern die betrauten Behörden konsultieren. Sie müssen insbesondere im Besitz einer ihnen von ihrer jeweils zuständigen Behörde zugeteilten Konzession oder Frequenz sein.

ATTENTION: conditions d’utilisation!

La bande de fréquences sur laquelle cet appareil fonctionne est gérée par des limitations et/ou des autorisations pour leur utilisation. Par conséquent, dans les pays de l'UE mentionnés dans la fiche, les opérateurs doivent consulter les autorités compétentes. En particulier, ils doivent être en possession d'une licence ou d'une fréquence qui leur est attribuée par leur autorité compétente respective.

ATENCIÓN: condiciones de uso!

La banda de frecuencias en la que opera este dispositivo está administrada por limitaciones y / o permisos para su uso. En consecuencia, en los países de la UE mencionados en la ficha, los operadores deben consultar a las autoridades encargadas. En particular, deben poseer una licencia o una frecuencia que les asigne su respectiva autoridad competente.

ATTENZIONE: condizioni d'uso!

La banda di frequenze su cui opera questo dispositivo è amministrata da limitazioni e/o permessi per il loro utilizzo. Di conseguenza, nei Paesi UE citati nella scheda, gli operatori devono consultare le autorità preposte. In particolare, devono possedere una licenza o una frequenza assegnata loro dalla rispettiva autorità competente.

INFORMAZIONE AGLI UTENTI: Ai sensi dell’art. 13 del decreto legislativo 25 luglio 2005, n.151 “Attuazione delle Direttive 2002/95/CE, 2002/96/CE e 2003/108/CE, relative alla riduzione dell’uso di sostanze pericolose nelle apparecchiature elettriche ed elettroniche, nonché allo smaltimento dei rifiuti”. Il simbolo del cassonetto barrato riportato sull’apparecchiatura indica che il prodotto alla fine della propria vita utile deve essere raccolto separatamente dagli altri rifiuti. L’utente dovrà, pertanto, conferire l’apparecchiatura giunta a fine vita agli idonei centri di raccolta differenziata dei rifiuti elettronici ed elettrotecnici, oppure riconsegnarla al rivenditore al momento dell’acquisto di una nuova apparecchiatura di tipo equivalente, in ragione di uno a uno.

L’adeguata raccolta differenziata per l’avvio successivo dell’apparecchiatura dismessa al riciclaggio, al trattamento e allo smaltimento ambientalmente compatibile contribuisce ad evitare possibili effetti negativi sull’ambiente e sulla salute e favorisce il riciclo dei materiali di cui è composta l’apparecchiatura. Lo smaltimento abusivo del prodotto da parte dell’utente comporta l’applicazione delle sanzioni amministrative di cui al dlgs. n.22/1997 (articolo 50 e seguenti del dlgs. n.22/1997).

All articles displaying this symbol on the body, packaging or instruction manual of same, must not be thrown away into normal disposal bins but brought to specialised waste disposal centres. Here, the various materials will be divided by characteristics and recycles, thus making an important contribution to environmental protection.

Alle Artikel, die auf der Verpackung oder der Gebrauchanweisung dieses Symbol tragen, dürfen nicht in den normalen Mülltonnen entsorgt werden, sondern müssen an gesonderten Sammelstellen abgegeben werden. Dort werden die Materialien entsprechend ihrer Eigenschaften getrennt und, um einen Beitrag zum Umweltschutz zu liefern, wiederverwertet.

Todos los artículos que exhiban este símbolo en el cuerpo del producto, en el embalaje o en el manual de instrucciones del mismo, no deben ser desechados junto a los residuos urbanos normales sino que deben ser depositados en los centros de recogida especializados. En estos centros, los materiales se dividirán en base a sus características y serán reciclados, para así poder contribuir de manera importante a la protección y conservación del medio ambiente.

Tous les articles présentant ce symbole sur le corps, l'emballage ou le manuel d'utilisation de celui-ci ne doivent pas être jetés dans des poubelles normales mais être amenés dans des centres de traitement spécialisés. Là, les différents matériaux seront séparés par caractéristiques et recyclés, permettant ainsi de contribuer à la protection de l'environnement.

Όλα τα προϊόντα στα οποία εμφανίζεται το ακόλουθο σύμβολο στο σώμα, τη συσκευασία ή το εγχειρίδιο χρήσης τους, δεν πρέπει να εναποθέτονται στους κοινούς κάδους απορριμάτων αλλά να προσκομίζονται στα ειδικά κέντρα αποκομιδής. Εκεί, τα διάφορα υλικά θα πρέπει να διαχωρίζονται ανάλογα με τα χαρακτηριστικά και τα ανακυκλούμενα υκλικά, συμμετέχοντας έτσι ουσιαστικά στην προστασία του

Disclaimer

The accuracy and completeness of the contents are sought in the process of compilation, but we do not bear any responsibility for the possible errors or omissions. With the continuous development of technology, we reserve the right to change the design and specification of the product without notice. No copy, modification, translation and dissemination of this handbook may be made in any form without the prior written authorization of our department.

EU Contact: APEX CE SPECIALISTS LIMITED
Unit 3D North Point House, north Point Business Park,
New Mallow Road, Cork, T23 AT2P, Ireland

PO FUNG ELECTRONIC (HK) INTERNATONAL GROUP COMPANY LIMITED
ADD: Room 1508, 15/F, Office Tower II, Grand Plaza, 625 Nathan Road, Kowloon, Hong Kong
E-mail: wangjianhui@baofengradio.com **Http://www.baofengradio.com**

Print version: AR26_CE_V1.0