SAR Test Report

Report No.: AGC02294200402FH01

FCC ID	:	2AJGM-P53U
PRODUCT DESIGNATION	:	TWO WAY RADIO
BRAND NAME	:	BAOFENG, POFUNG
MODEL NAME	:	P53U, BF-1903, P53UH, P53UL, P53X
APPLICANT	:	PO FUNG ELECTRONIC(HK) INTERNATIOANL GROUP COMPANY
DATE OF ISSUE	:	Jun. 28,2020
STANDARD(S)	:	IEEE Std. 1528:2013 FCC 47 CFR Part 2§2.1093:2013 IEEE Std C95.1 ™-2005 IEC 62209-1: 2016
REPORT VERSION	:	V1.0

Attestation of Global Compliance(Shenzhen) Co., Ltd.

CAUTION:
This report shall not be reproduced except in full without the written permission of the test laboratory and shall not be quoted out of context.

Report Revise Record

Report Version	Revise Time	Issued Date	Valid Version	Notes
V1.0	/	Jun. 28,2020	Valid	Initial Release

Test Report

Applicant Name	PO FUNG ELECTRONIC(HK) INTERNATIOANL GROUP COMPANY
Applicant Address	3/F FULOK BLDG 131-133 WING LOK ST SHEUNG WAN, Hong Kong
Manufacturer Name	PO FUNG ELECTRONIC(HK) INTERNATIOANL GROUP COMPANY
Manufacturer Address	3/F FULOK BLDG 131-133 WING LOK ST SHEUNG WAN, Hong Kong
Factory Name	PO FUNG ELECTRONIC(HK) INTERNATIOANL GROUP COMPANY
Factory Address	3/F FULOK BLDG 131-133 WING LOK ST SHEUNG WAN, Hong Kong
Product Designation	TWO WAY RADIO
Brand Name	BAOFENG, POFUNG
Model Name	P53U, BF-1903, P53UH, P53UL, P53X
Different Description	The same motherboard and specifications, only the shell design differences & models, trademarks are different.
EUT Voltage	DC7.4 V
Applicable Standard	IEEE Std. 1528:2013 FCC 47 CFR Part 2§2.1093:2013 IEEE Std C95.1 ™-2005 IEC 62209-1: 2016
Test Date	May 23,2020
Report Template	AGCRT- US -PTT/SAR (2018-02-02)

Note: The results of testing in this report apply to the product/system which was tested only.

Prepared By

Jack Gui (Project Engineer) May 23,2020

Reviewed By

Angela Li (Reviewer) Jun. 28,2020

Approved By

Forrest Lei (Authorized Officer) Jun. 28,2020

TABLE OF CONTENTS

1. SUMMARY OF MAXIMUM SAR VALUE 5

2. GENERAL INFORMATION 6

2.1. EUT DESCRIPTION 6

3. SAR MEASUREMENT SYSTEM 7

3.1. THE SATIMO SYSTEM USED FOR PERFORMING COMPLIANCE TESTS CONSISTS OF FOLLOWING ITEMS 7
3.2. COMOSAR E-FIELD PROBE 8
3.3. ROBOT 8
3.4. VIDEO POSITIONING SYSTEM 9
3.5. DEVICE HOLDER 9
3.6. SAM TWIN PHANTOM 10

4. SAR MEASUREMENT PROCEDURE 11

4.1. SPECIFIC ABSORPTION RATE (SAR) 11
4.2. SAR MEASUREMENT PROCEDURE 12

5. TISSUE SIMULATING LIQUID 14

5.1. THE COMPOSITION OF THE TISSUE SIMULATING LIQUID 14
5.2. TISSUE DIELECTRIC PARAMETERS FOR HEAD AND BODY PHANTOMS 14
5.3. TISSUE CALIBRATION RESULT 15

6. SAR SYSTEM CHECK PROCEDURE 16

6.1. SAR SYSTEM CHECK PROCEDURES 16

7. EUT TEST POSITION 18

7.1. BODY WORN POSITION 18

8. SAR EXPOSURE LIMITS 19

9. TEST FACILITY 20

10. TEST EQUIPMENT LIST 21

11. MEASUREMENT UNCERTAINTY 22

12. POWER MEASUREMENT 25

13. TEST RESULTS 26

13.1. SAR TEST RESULTS SUMMARY 26

APPENDIX A. SAR SYSTEM CHECK DATA 29

APPENDIX B. SAR MEASUREMENT DATA 31

APPENDIX C. TEST SETUP PHOTOGRAPHS 43

APPENDIX D. CALIBRATION DATA 46

1. SUMMARY OF MAXIMUM SAR VALUE

The maximum results of Specific Absorption Rate (SAR) found during testing for EUT are as follows:

Highest Report standalone SAR Summary (50% duty cycle)

Frequency Band	Separation	Highest Reported 1g-SAR(W/Kg)	
		Face Up (with 25mm separation)	Back Touch
462.5625MHz-462.7125MHz(5W)	12.5KHz	0.393	0.638
462.5500MHz-462.7250MHz(5W)		0.360	0.669
467.6500MHz(5W)		0.637	0.756

This device is compliance with Specific Absorption Rate (SAR) for general population/uncontrolled exposure environment limits(1.6W/Kg) specified in 47 CFR part 2 (2.1093) and ANSI/IEEE C95.1, and had been tested in accordance with measurement methods and procedures specified in IEEE 1528-2013 and the following specific FCC Test Procedures:
KDB447498 D01 General RF Exposure Guidance v06
KDB 865664 D01 SAR Measurement 100MHz to 6GHz v01r04
KDB 643646 D01 SAR Test for PTT Radios v01r03

2. GENERAL INFORMATION

2.1. EUT Description

General Information	
Product Name	TWO WAY RADIO
Test Model	P53U
Hardware Version	BF_1903_A21
Software Version	BF_1903_A21
Exposure Category:	General Population/Uncontrolled Environments
Modulation Type	FM
TX Frequency Range	GMRS: 462.5625MHz-462.7125MHz(5W); 462.5500MHz-462.7250MHz(5W); 467.6500MHz(5W) Test Channel :4, 12 and 16 channel
Rated Power	5W/0.5W (It was fixed by the manufacturer, any individual can't arbitrarily change it)
Max. Output Power	36.95dBm
Channel Spacing	12.5 KHz
Antenna Type	Inseparable
Antenna Gain	1.5dBi
Body-Worn Accessories:	Belt Clip with headset
Face-Head Accessories:	None
Battery Type (s) Tested:	DC7.4V, 2200mAh (by battery)

Note: 1. The sample used for testing is end product.
2. The test sample has no any deviation to the test method of standard mentioned in page 1.

Product	Type	
	☒ Production unit	☐ Identical Prototype

3. SAR MEASUREMENT SYSTEM

3.1. The SATIMO system used for performing compliance tests consists of following items

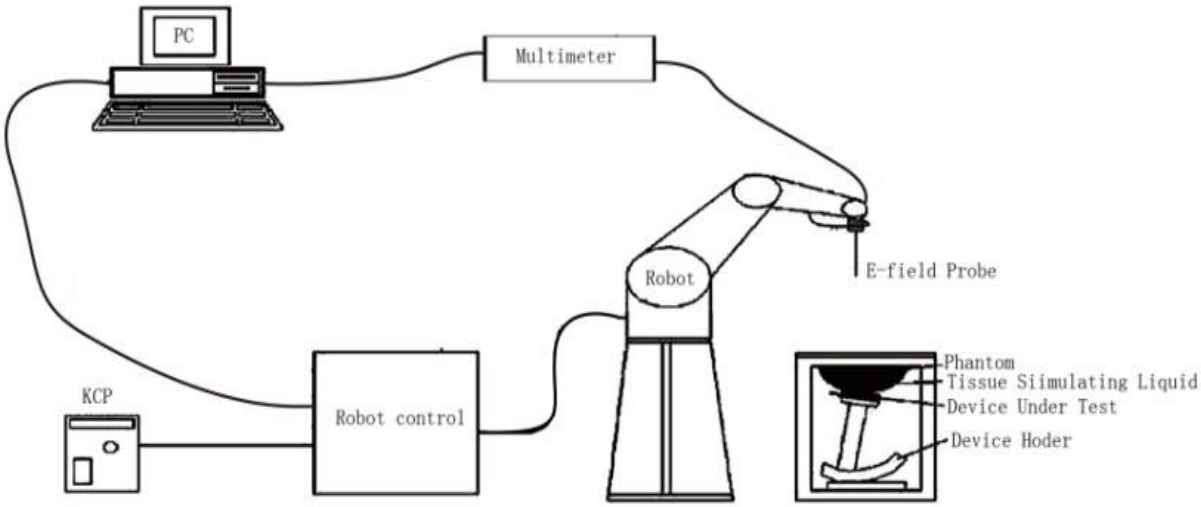

The COMOSAR system for performing compliance tests consists of the following items:

- The PC. It controls most of the bench devices and stores measurement data.A computer running WinXP and the Opensar software.
- The E-Field probe. The probe is a 3-axis system made of 3 distinct dipoles. Each dipole returns a voltage in function of the ambient electric field.
- The Keithley multimeter measures each probe dipole voltages.
- The SAM phantom simulates a human head. The measurement of the electric field is made inside the phantom.
- The liquids simulate the dielectric properties of the human head tissues.
- The network emulator controls the mobile phone under test.
- The validation dipoles are used to measure a reference SAR. They are used to periodically check the bench to make sure that there is no drift of the system characteristics over time.
- The phantom, the device holder and other accessories according to the targeted measurement.

3.2. COMOSAR E-Field Probe

The SAR measurement is conducted with the dosimetric probe manufactured by SATIMO. The probe is specially designed and calibrated for use in liquid with high permittivity. The dosimetric probe has special calibration in liquid at different frequency. SATIMO conducts the probe calibration in compliance with international and national standards (e.g. EN62209, etc.)Under ISO17025.The calibration data are in Appendix D.

Isotropic E-Field Probe Specification

Model	SSE2	
Manufacture	MVG	
Identification No.	SN 41/18 EPGO334	
Frequency	0.45GHz-6GHz Linearity:±0.08dB(0.45GHz-6GHz)	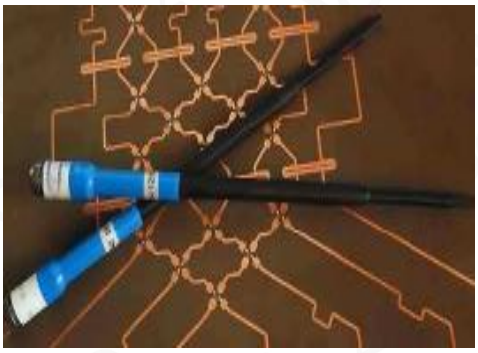
Dynamic Range	0.01W/Kg-100W/Kg Linearity:±0.08dB	
Dimensions	Overall length:330mm Length of individual dipoles:2mm Maximum external diameter:8mm Probe Tip external diameter:2.5mm Distance between dipoles/ probe extremity:1mm	
Application	High precision dosimetric measurements in any exposure scenario (e.g., very strong gradient fields). Only probe which enables compliance testing for frequencies up to 6 GHz with precisin of better 30%.	

3.3. Robot

The COMOSAR system uses the KUKA robot from SATIMO SA (France).For the 6-axis controller COMOSAR system, the KUKA robot controller version from SATIMO is used.
The XL robot series have many features that are important for our application:
- High precision (repeatability 0.02 mm)
- High reliability (industrial design)
- Jerk-free straight movements
- Low ELF interference (the closed metallic construction shields against motor control fields)
- 6-axis controller

3.4. Video Positioning System

The video positioning system is used in Open SAR to check the probe. Which is composed of a camera, LED, mirror and mechanical parts. The camera is piloted by the main computer with fire wire link. During the process, the actual position of the probe tip with respect to the robot arm is measured, as well as the probe length and the horizontal probe offset. The software then corrects all movements, such that the robot coordinates are valid for the probe tip. The repeatability of this process is better than 0.1 mm. If a position has been taught with an aligned probe, the same position will be reached with another aligned probe within 0.1 mm, even if the other probe has different dimensions. During probe rotations, the probe tip will keep its actual position.	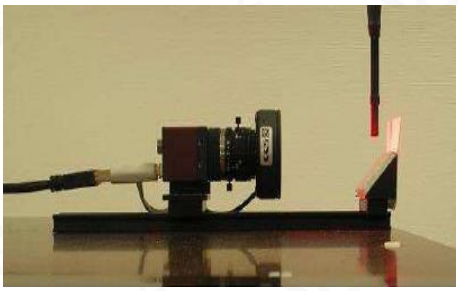

3.5. Device Holder

The COMOSAR device holder is designed to cope with different positions given in the standard. It has two scales for the device rotation (with respect to the body axis) and the device inclination (with respect to the line between the ear reference points). The rotation center for both scales is the ear reference point (EPR). Thus the device needs no repositioning when changing the angles. The COMOSAR device holder has been made out of low-loss POM material having the following dielectric parameters: relative permittivity εr =3 and loss tangent δ = 0.02. The amount of dielectric material has been reduced in the closest vicinity of the device, since measurements have suggested that the influence of the clamp on the test results could thus be lowered.	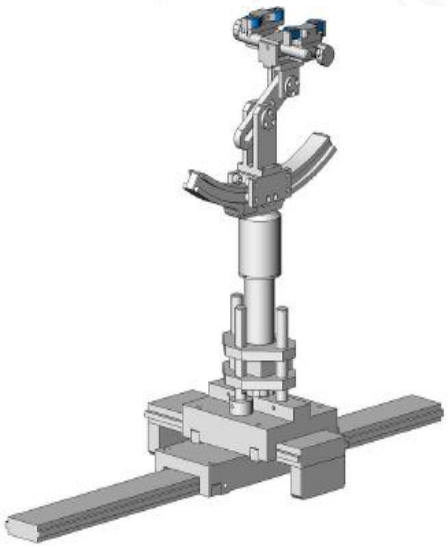

3.6. SAM Twin Phantom

The SAM twin phantom is a fiberglass shell phantom with 2mm shell thickness (except the ear region where shell thickness increases to 6mm). It has three measurement areas: □ Left head □ Right head □ Flat phantom	

The bottom plate contains three pair of bolts for locking the device holder. The device holder positions are adjusted to the standard measurement positions in the three sections. A white cover is provided to tap the phantom during off-periods to prevent water evaporation and changes in the liquid parameters. On the phantom top, three reference markers are provided to identify the phantom position with respect to the robot.

ELLI39 Phantom

The Flat phantom is a fiberglass shell phantom with 2mm+/- 0.2 mm shell thickness. It has only one measurement area for Flat phantom	

4. SAR MEASUREMENT PROCEDURE

4.1. Specific Absorption Rate (SAR)

SAR is related to the rate at which energy is absorbed per unit mass in object exposed to a radio field. The SAR distribution in a biological body is complicated and is usually carried out by experimental techniques or numerical modeling. The standard recommends limits for two tiers of groups, occupational/controlled and occupational/uncontrolled, based on a person's awareness and ability to exercise control over his or her exposure. In general, occupational/controlled exposure limits are higher than the limits for general population/uncontrolled.

The SAR definition is the time derivative (rate) of the incremental energy (dW) absorbed by (dissipated in) an incremental mass (dm) contained in a volume element (dv) of given mass density (ρ). The equation description is as below:

$$\mathrm{SAR} = \frac{\mathrm{d}}{\mathrm{d}t}\left(\frac{\mathrm{d}W}{\mathrm{d}m}\right) = \frac{\mathrm{d}}{\mathrm{d}t}\left(\frac{\mathrm{d}W}{\rho \mathrm{d}V}\right)$$

SAR is expressed in units of Watts per kilogram (W/Kg)
SAR can be obtained using either of the following equations:

$$\mathrm{SAR} = \frac{\sigma E^2}{\rho}$$

$$\mathrm{SAR} = c_h \left.\frac{\mathrm{d}T}{\mathrm{d}t}\right|_{t=0}$$

Where

SAR	is the specific absorption rate in watts per kilogram;
E	is the r.m.s. value of the electric field strength in the tissue in volts per meter;
σ	is the conductivity of the tissue in siemens per metre;
ρ	is the density of the tissue in kilograms per cubic metre;
c_h	is the heat capacity of the tissue in joules per kilogram and Kelvin;
$\frac{\mathrm{dT}}{\mathrm{dt}} \mid \mathrm{t} = 0$	is the initial time derivative of temperature in the tissue in kelvins per second

4.2. SAR Measurement Procedure

Step 1: Power Reference Measurement

The Power Reference Measurement and Power Drift Measurement are for monitoring the power drift of the device under test in the batch process. The minimum distance of probe sensors to surface is 2.7mm This distance cannot be smaller than the distance os sensor calibration points to probe tip as `defined in the probe properties,

Step 2: Area Scan

The Area Scan is used as a fast scan in two dimensions to find the area of high field values, before doing a fine measurement around the hot spot. The sophisticated interpolation routines implemented in SATIMO software can find the maximum locations even in relatively coarse grids. When an Area Scan has measured all reachable points, it computes the field maximal found in the scanned area, within a range of the global maximum. The range (in db) is specified in the standards for compliance testing. For example, a 2db range is required in IEEE Standard 1528 and IEC62209 standards, whereby 3db is a requirement when compliance is assessed in accordance with the ARIB standard (Japan) If one Zoom Scan follows the Area Scan, then only the absolute maximum will be taken as reference. For cases where multiple maximum are detected, the number of Zoom Scan has to be increased accordingly.

Area Scan Parameters extracted from KDB 865664 D01 SAR Measurement 100MHz to 6GHz

	≤ 3 GHz	> 3 GHz
Maximum distance from closest measurement point (geometric center of probe sensors) to phantom surface	5 ± 1 mm	½·δ·ln(2) ± 0.5 mm
Maximum probe angle from probe axis to phantom surface normal at the measurement location	30° ± 1°	20° ± 1°
Maximum area scan spatial resolution: Δx_{Area}, Δy_{Area}	≤ 2 GHz: ≤ 15 mm 2 – 3 GHz: ≤ 12 mm	3 – 4 GHz: ≤ 12 mm 4 – 6 GHz: ≤ 10 mm
	When the x or y dimension of the test device, in the measurement plane orientation, is smaller than the above, the measurement resolution must be ≤ the corresponding x or y dimension of the test device with at least one measurement point on the test device.	

Step 3: Zoom Scan

Zoom Scan are used to assess the peak spatial SAR value within a cubic average volume containing 1g abd 10g of simulated tissue. The Zoom Scan measures points(refer to table below) within a cube whose base faces are centered on the maxima found in a preceding area scan job within the same procedure. When the measurement is done, the Zoom Scan evaluates the averaged SAR for 1g and 10g and displays these values next to the job's label.

Zoom Scan Parameters extracted from KDB865664 D01 SAR Measurement 100MHz to 6GHz

Maximum zoom scan spatial resolution: Δx_{Zoom}, Δy_{Zoom}			≤ 2 GHz: ≤ 8 mm 2 – 3 GHz: ≤ 5 mm*	3 – 4 GHz: ≤ 5 mm* 4 – 6 GHz: ≤ 4 mm*
Maximum zoom scan spatial resolution, normal to phantom surface	uniform grid: $\Delta z_{Zoom}(n)$		≤ 5 mm	3 – 4 GHz: ≤ 4 mm 4 – 5 GHz: ≤ 3 mm 5 – 6 GHz: ≤ 2 mm
	graded grid	$\Delta z_{Zoom}(1)$: between 1st two points closest to phantom surface	≤ 4 mm	3 – 4 GHz: ≤ 3 mm 4 – 5 GHz: ≤ 2.5 mm 5 – 6 GHz: ≤ 2 mm
		$\Delta z_{Zoom}(n>1)$: between subsequent points	$\leq 1.5 \cdot \Delta z_{Zoom}(n-1)$	
Minimum zoom scan volume	x, y, z		≥ 30 mm	3 – 4 GHz: ≥ 28 mm 4 – 5 GHz: ≥ 25 mm 5 – 6 GHz: ≥ 22 mm

Note: δ is the penetration depth of a plane-wave at normal incidence to the tissue medium; see draft standard IEEE P1528-2011 for details.

* When zoom scan is required and the *reported* SAR from the *area scan based 1-g SAR estimation* procedures of KDB 447498 is ≤ 1.4 W/kg, ≤ 8 mm, ≤ 7 mm and ≤ 5 mm zoom scan resolution may be applied, respectively, for 2 GHz to 3 GHz, 3 GHz to 4 GHz and 4 GHz to 6 GHz.

Step 4: Power Drift Measurement

The Power Drift Measurement measures the field at the same location as the most recent power reference measurement within the same procedure, and with the same settings. The Power Drift Measurement gives the field difference in dB from the reading conducted within the same settings. This allows a user to monitor the power drift of the device under test within a batch process. The measurement procedure is the same as Step 1.

5. TISSUE SIMULATING LIQUID

For SAR measurement of the field distribution inside the phantom, the phantom must be filled with homogeneous tissue simulating liquid to a depth of at least 15cm. For head SAR testing the liquid height from the ear reference point (ERP) of the phantom to the liquid top surface is larger than 15cm For body SAR testing, the liquid height from the center of the flat phantom to the liquid top surface is larger than 15cm.The nominal dielectric values of the tissue simulating liquids in the phantom and the tolerance of 10% are listed in 6.2

5.1. The composition of the tissue simulating liquid

Ingredient (% Weight) / Frequency (MHz)	Water	Nacl	Sugar	HEC	Bactericide	DGBE	1,2-Propanediol	Triton X-100
450 Head (100%)	38.56	3.95	56.32	0.98	0.19	0.0	0.0	0.0

5.2. Tissue Dielectric Parameters for Head and Body Phantoms

The head tissue dielectric parameters recommended by the IEC 62209-1 have been incorporated in the following table. The body tissue dielectric parameters recommended by the IEC 62209-2 have been incorporated in the following table.

Target Frequency (MHz)	head		body	
	εr	σ (S/m)	εr	σ (S/m)
150	52.3	0.76	52.3	0.76
300	45.3	0.87	45.3	0.87
450	**43.5**	**0.87**	43.5	0.87
835	41.5	0.90	41.5	0.90
900	41.5	0.97	41.5	0.97
915	41.5	0.98	41.5	0.98
1450	40.5	1.20	40.5	1.20
1610	40.3	1.29	40.3	1.29
1800 – 2000	40.0	1.40	40.0	1.40
2450	39.2	1.80	39.2	1.80
3000	38.5	2.40	38.5	2.40

(εr = relative permittivity, σ = conductivity and ρ = 1000 kg/m3)

5.3. Tissue Calibration Result

The dielectric parameters of the liquids were verified prior to the SAR evaluation using SATIMO Dielectric Probe Kit and R&S Network Analyzer ZVL6.

Tissue Stimulant Measurement for 450MHz				
Fr. (MHz)	Dielectric Parameters (±10%)		Tissue Temp [°C]	Test time
	Head			
	εr43.50(39.15 – 47.85)	δ[s/m]0.87(0.783 - 0.957)		
450	42.51	0.85	20.4	May 23,2020
462	41.76	0.87		
467	40.68	0.90		

6. SAR SYSTEM CHECK PROCEDURE

6.1. SAR System Check Procedures

SAR system check is required to confirm measurement accuracy, according to the tissue dielectric media, probe calibration points and other system operating parameters required for measuring the SAR of a test device. The system verification must be performed for each frequency band and within the valid range of each probe calibration point required for testing the device. The same SAR probe(s) and tissue-equivalent media combinations used with each specific SAR system for system verification must be used for device testing. When multiple probe calibration points are required to cover substantially large transmission bands, independent system verifications are required for each probe calibration point. A system verification must be performed before each series of SAR measurements using the same probe calibration point and tissue-equivalent medium. Additional system verification should be considered according to the conditions of the tissue-equivalent medium and measured tissue dielectric parameters, typically every three to four days when the liquid parameters are remeasured or sooner when marginal liquid parameters are used at the beginning of a series of measurements.

Each SATIMO system is equipped with one or more system check kits. These units, together with the predefined measurement procedures within the SATIMO software, enable the user to conduct the system check and system validation. System kit includes a dipole, and dipole device holder.

The system check verifies that the system operates within its specifications. It's performed daily or before every SAR measurement. The system check uses normal SAR measurement in the flat section of the phantom with a matched dipole at a specified distance. The system check setup is shown as below.

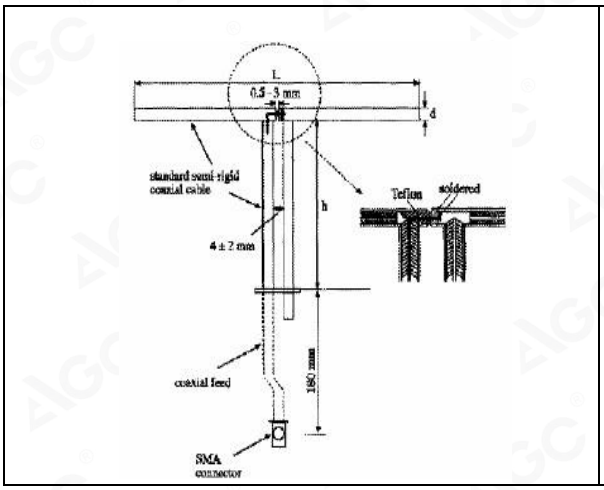

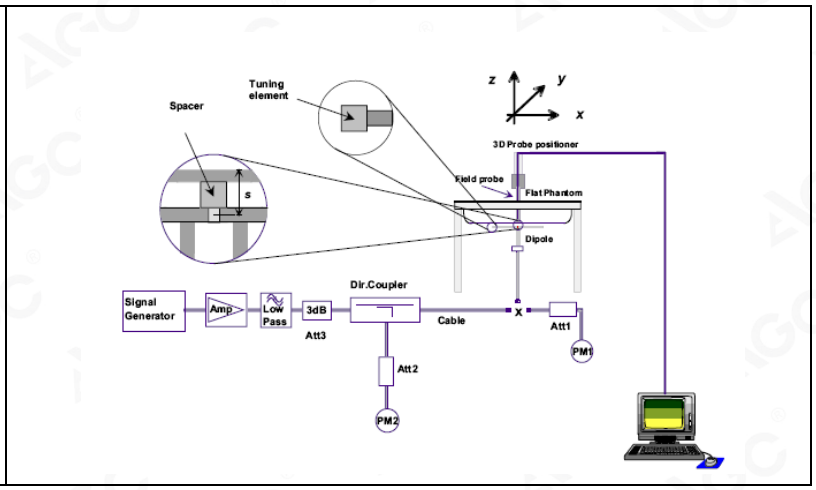

6.2. SAR System Check

6.2.1. Dipoles

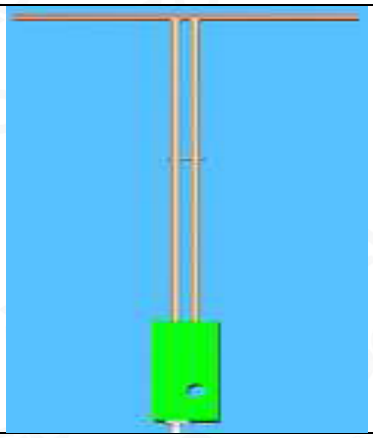	The dipoles used is based on the IEEE-1528 standard, and is complied with mechanical and electrical specifications in line with the requirements of IEEE. the table below provides details for the mechanical and electrical specifications for the dipoles

Frequency	R/L (mm)	R/h (mm)	d (mm)
450MHz	290	166.7	6.35

6.2.2. System Check Result

System Performance Check at 450MHz								
Validation Kit: SN 30/14DIP 0G450-330								
Frequency [MHz]	Target Value(W/Kg)		Reference Result (± 10%)		Normalized to 1W(W/Kg)		Tissue Temp. [°C]	Test time
	1g	10g	1g	10g	1g	10g		
450 head	4.80	3.08	4.320-5.280	2.772-3.388	4.86	3.25	20.4	May 23,2020

Note:
(1) We use a CW signal of 18dBm for system check, and then all SAR value are normalized to 1W forward power. The result must be within ±10% of target value.

7. EUT TEST POSITION

This EUT was tested in **Front Face and Rear Face.**

7.1. Body Worn Position

(1) To position the EUT parallel to the phantom surface.
(2) To adjust the EUT parallel to the flat phantom.
(3) To adjust the distance between the EUT surface and the flat phantom to **25mm** while used in front of face, and body back touch with belt clip.

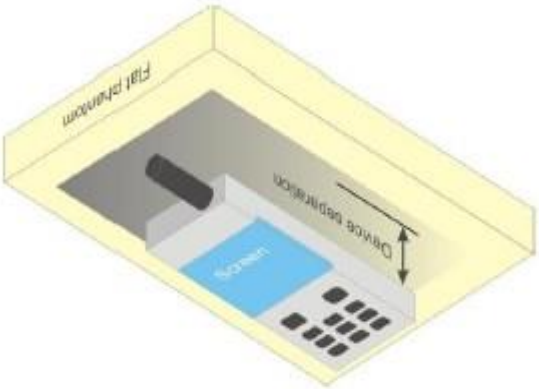

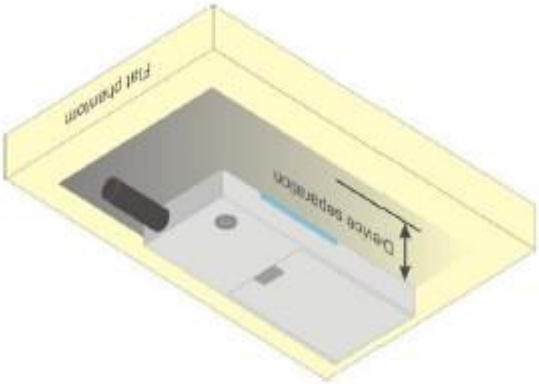

8. SAR EXPOSURE LIMITS

Limits for General population/Uncontrolled exposure Environment

Type Exposure Limits	general population/uncontrolled exposure limits (W/Kg)
Spatial Average SAR (whole body)	1.6

9. TEST FACILITY

Test Site	Attestation of Global Compliance (Shenzhen) Co., Ltd
Location	1-2/F, Building 19, Junfeng Industrial Park, Chongqing Road, Heping Community, Fuhai Street, Bao'an District, Shenzhen, Guangdong, China
Designation Number	CN1259
FCC Test Firm Registration Number	975832
A2LA Cert. No.	5054.02
Description	Attestation of Global Compliance(Shenzhen) Co., Ltd is accredited by A2LA

10. TEST EQUIPMENT LIST

Equipment description	Manufacturer/ Model	Identification No.	Current calibration date	Next calibration date
SAR Probe	MVG	SN 41/18 EPGO334	Jun. 04,2019	Jun. 03,2020
Phantom	SATIMO	SN_4511_SAM90	Validated. No cal required.	Validated. No cal required.
Phantom	SATIMO	SN_2316_ELLI39	Validated. No cal required.	Validated. No cal required.
Liquid	SATIMO	-	N/A	N/A
Multimeter	Keithley 2000	4114939	Sep. 09,2019	Sep. 08,2020
Dipole	SATIMO SID450	SN 30/14 DIP0G450-330	Aug. 15,2017	Aug. 14,2020
Signal Generator	Agilent-E4438C	US41461365	Oct. 08,2019	Oct. 07,2020
Vector Analyzer	Agilent / E4440A	US41421290	Sep. 09,2019	Sep. 08,2020
Network Analyzer	Rhode & Schwarz ZVL6	SN101443	Oct. 08,2019	Oct. 07,2020
Attenuator	Warison /WATT-6SR1211	S/N:WRJ34AYM2F1	June 11,2019	June 10, 2020
Amplifier	AS0104-55_55	1004793	June 12,2019	June 11,2020
Directional Couple	Werlatone/ C5571-10	SN99463	June 12,2019	June 11,2020
Power Sensor	NRP-Z21	1137.6000.02	Sep. 09,2019	Sep. 08,2020
Power Sensor	NRP-Z23	US38261498	Feb. 18,2020	Feb. 17,2021
Power Viewer	R&S	V2.3.1.0	N/A	N/A

Note: Per KDB 865664 Dipole SAR Validation, AGC Lab has adopted 3 years calibration intervals. On annual basis, every measurement dipole has been evaluated and is in compliance with the following criteria:
1. There is no physical damage on the dipole;
2. System validation with specific dipole is within 10% of calibrated value;
3. Return-loss is within 20% of calibrated measurement;
4. Impedance is within 5Ω of calibrated measurement.

11. MEASUREMENT UNCERTAINTY

SATIMO Uncertainty- SN 41/18 EPGO334 Measurement uncertainty for DUT averaged over 1 gram / 10 gram.									
a	b	c	d	e f(d,k)	f	g	h c×f/e	i c×g/e	k
Uncertainty Component	Sec.	Tol (+- %)	Prob. Dist.	Div.	Ci (1g)	Ci (10g)	1g Ui (±%)	10g Ui (±%)	vi
Measurement System									
Probe calibration	E.2.1	5.831	N	1	1	1	5.83	5.83	∞
Axial Isotropy	E.2.2	0.685	R	$\sqrt{3}$	√0.5	√0.5	0.28	0.28	∞
Hemispherical Isotropy	E.2.2	1.14	R	$\sqrt{3}$	√0.5	√0.5	0.47	0.47	∞
Boundary effect	E.2.3	1	R	$\sqrt{3}$	1	1	0.58	0.58	∞
Linearity	E.2.4	0.935	R	$\sqrt{3}$	1	1	0.54	0.54	∞
System detection limits	E.2.4	1.0	R	$\sqrt{3}$	1	1	0.58	0.58	∞
Modulation response	E2.5	3.0	R	$\sqrt{3}$	1	1	1.73	1.73	∞
Readout Electronics	E.2.6	0.021	N	1	1	1	0.021	0.021	∞
Response Time	E.2.7	0	R	$\sqrt{3}$	1	1	0	0	∞
Integration Time	E.2.8	1.4	R	$\sqrt{3}$	1	1	0.81	0.81	∞
RF ambient conditions-Noise	E.6.1	3.0	R	$\sqrt{3}$	1	1	1.73	1.73	∞
RF ambient conditions-reflections	E.6.1	3.0	R	$\sqrt{3}$	1	1	1.73	1.73	∞
Probe positioner mechanical tolerance	E.6.2	1.4	R	$\sqrt{3}$	1	1	0.81	0.81	∞
Probe positioning with respect to phantom shell	E.6.3	1.4	R	$\sqrt{3}$	1	1	0.81	0.81	∞
Extrapolation, interpolation, and integrations algorithms for max. SAR evaluation	E.5	2.3	R	$\sqrt{3}$	1	1	1.33	1.33	∞
Test sample Related									
Test sample positioning	E.4.2	2.6	N	1	1	1	2.6	2.6	∞
Device holder uncertainty	E.4.1	3	N	1	1	1	3	3	∞
Output power variation—SAR drift measurement	E.2.9	5	R	$\sqrt{3}$	1	1	2.89	2.89	∞
SAR scaling	E.6.5	5	R	$\sqrt{3}$	1	1	2.89	2.89	∞
Phantom and tissue parameters									
Phantom shell uncertainty—shape, thickness, and permittivity	E.3.1	4	R	$\sqrt{3}$	1	1	2.31	2.31	∞
Uncertainty in SAR correction for deviations in permittivity and conductivity	E.3.2	1.9	N	1	1	0.84	1.90	1.60	∞
Liquid conductivity measurement	E.3.3	4	N	1	0.78	0.71	3.12	2.84	M
Liquid permittivity measurement	E.3.3	5	N	1	0.23	0.26	1.15	1.30	M
Liquid conductivity—temperature uncertainty	E.3.4	2.5	R	$\sqrt{3}$	0.78	0.71	1.13	1.02	∞
Liquid permittivity—temperature uncertainty	E.3.4	2.5	R	$\sqrt{3}$	0.23	0.26	0.33	0.38	∞
Combined Standard Uncertainty			RSS				9.796	9.597	
Expanded Uncertainty (95% Confidence interval)			K=2				19.593	19.194	

SATIMO Uncertainty- SN 41/18 EPGO334 System Validation uncertainty for DUT averaged over 1 gram / 10 gram.									
a	b	c	d	e f(d,k)	f	g	h c×f/e	i c×g/e	k
Uncertainty Component	Sec.	Tol (±%)	Prob. Dist.	Div.	Ci (1g)	Ci (10g)	1g Ui (±%)	10g Ui (±%)	vi
Measurement System									
Probe calibration	E.2.1	5.831	N	1	1	1	5.831	5.831	∞
Axial Isotropy	E.2.2	0.685	R	$\sqrt{3}$	1	1	0.395	0.395	∞
Hemispherical Isotropy	E.2.2	1.14	R	$\sqrt{3}$	0	0	0.000	0.000	∞
Boundary effect	E.2.3	1	R	$\sqrt{3}$	1	1	0.577	0.577	∞
Linearity	E.2.4	0.935	R	$\sqrt{3}$	1	1	0.540	0.540	∞
System detection limits	E.2.4	1.0	R	$\sqrt{3}$	1	1	0.58	0.58	∞
Modulation response	E2.5	3.0	R	$\sqrt{3}$	0	0	0.00	0.00	∞
Readout Electronics	E.2.6	0.021	N	1	1	1	0.021	0.021	∞
Response Time	E.2.7	0.0	R	$\sqrt{3}$	0	0	0.00	0.00	∞
Integration Time	E.2.8	1.4	R	$\sqrt{3}$	0	0	0.00	0.00	∞
RF ambient conditions-Noise	E.6.1	3.0	R	$\sqrt{3}$	1	1	1.73	1.73	∞
RF ambient conditions-reflections	E.6.1	3.0	R	$\sqrt{3}$	1	1	1.73	1.73	∞
Probe positioner mechanical tolerance	E.6.2	1.4	R	$\sqrt{3}$	1	1	0.81	0.81	∞
Probe positioning with respect to phantom shell	E.6.3	1.4	R	$\sqrt{3}$	1	1	0.81	0.81	∞
Extrapolation, interpolation, and integrations algorithms for max. SAR evaluation	E.5	2.3	R	$\sqrt{3}$	1	1	1.33	1.33	∞
System check source (dipole)									
Deviation of experimental dipole from numerical dipole	E.6.4	5.0	N	1	1	1	5.00	5.00	∞
Input power and SAR drift measurement	8,6.6.4	5.0	R	$\sqrt{3}$	1	1	2.89	2.89	∞
Dipole axis to liquid distance	8,E.6.6	2.0	R	$\sqrt{3}$	1	1	1.15	1.15	∞
Phantom and tissue parameters									
Phantom shell uncertainty—shape, thickness, and permittivity	E.3.1	4.0	R	$\sqrt{3}$	1	1	2.31	2.31	∞
Uncertainty in SAR correction for deviations in permittivity and conductivity	E.3.2	1.9	N	1	1	0.84	1.90	1.60	∞
Liquid conductivity measurement	E.3.3	4.0	N	1	0.78	0.71	3.12	2.84	M
Liquid permittivity measurement	E.3.3	5.0	N	1	0.23	0.26	1.15	1.30	M
Liquid conductivity—temperature uncertainty	E.3.4	2.5	R	$\sqrt{3}$	0.78	0.71	1.13	1.02	∞
Liquid permittivity—temperature uncertainty	E.3.4	2.5	R	$\sqrt{3}$	0.23	0.26	0.33	0.38	∞
Combined Standard Uncertainty			RSS				9.724	9.524	
Expanded Uncertainty (95% Confidence interval)			K=2				19.449	19.048	

SATIMO Uncertainty- SN 41/18 EPGO334 System Check uncertainty for DUT averaged over 1 gram / 10 gram.									
a	b	c	d	e f(d,k)	f	g	h c×f/e	i c×g/e	k
Uncertainty Component	Sec.	Tol (+- %)	Prob. Dist.	Div.	Ci (1g)	Ci (10g)	1g Ui (+-%)	10g Ui (+-%)	vi
Measurement System									
Probe calibration drift	E.2.1.3	5	N	1	1	1	5	5	∞
Axial Isotropy	E.2.2	0.685	R	$\sqrt{3}$	0	0	0	0	∞
Hemispherical Isotropy	E.2.2	1.14	R	$\sqrt{3}$	0	0	0	0	∞
Boundary effect	E.2.3	1	R	$\sqrt{3}$	0	0	0	0	∞
Linearity	E.2.4	0.935	R	$\sqrt{3}$	0	0	0	0	∞
System detection limits	E.2.4	1.0	R	$\sqrt{3}$	0	0	0.00	0.00	∞
Modulation response	E2.5	3.0	R	$\sqrt{3}$	0	0	0.00	0.00	∞
Readout Electronics	E.2.6	0.021	N	1	0	0	0.00	0.00	∞
Response Time	E.2.7	0	R	$\sqrt{3}$	0	0	0.00	0.00	∞
Integration Time	E.2.8	1.4	R	$\sqrt{3}$	0	0	0.00	0.00	∞
RF ambient conditions-Noise	E.6.1	3.0	R	$\sqrt{3}$	0	0	0.00	0.00	∞
RF ambient conditions-reflections	E.6.1	3.0	R	$\sqrt{3}$	0	0	0.00	0.00	∞
Probe positioner mechanical tolerance	E.6.2	1.4	R	$\sqrt{3}$	1	1	0.81	0.81	∞
Probe positioning with respect to phantom shell	E.6.3	1.4	R	$\sqrt{3}$	1	1	0.81	0.81	∞
Extrapolation, interpolation, and integrations algorithms for max. SAR evaluation	E.5	2.3	R	$\sqrt{3}$	0	0	0.00	0.00	∞
System check source (dipole)									
Deviation of experimental dipoles	E.6.4	2	N	1	1	1	2	2	∞
Input power and SAR drift measurement	8,6.6.4	5	R	$\sqrt{3}$	1	1	2.89	2.89	∞
Dipole axis to liquid distance	8,E.6.6	2	R	$\sqrt{3}$	1	1	1.15	1.15	∞
Phantom and tissue parameters									
Phantom shell uncertainty—shape, thickness, and permittivity	E.3.1	4	R	$\sqrt{3}$	1	1	2.31	2.31	∞
Uncertainty in SAR correction for deviations in permittivity and conductivity	E.3.2	1.9	N	1	1	0.84	1.90	1.60	∞
Liquid conductivity measurement	E.3.3	4	N	1	0.78	0.71	3.12	2.84	M
Liquid permittivity measurement	E.3.3	5	N	1	0.23	0.26	1.15	1.30	M
Liquid conductivity—temperature uncertainty	E.3.4	2.5	R	$\sqrt{3}$	0.78	0.71	1.13	1.02	∞
Liquid permittivity—temperature uncertainty	E.3.4	2.5	R	$\sqrt{3}$	0.23	0.26	0.33	0.38	∞
Combined Standard Uncertainty			RSS				7.462	7.199	
Expanded Uncertainty (95% Confidence interval)			K=2				14.925	14.398	

12. POWER MEASUREMENT

Frequency (MHz)	Channel	ERP (dBm)
462.5625-462.7125MHz(5W)		
462.5625	1	36.88
462.6375	4	36.91
462.7125	7	36.85
462.5500-462.7250MHz(5W)		
462.5500	8	36.91
462.6500	12	**36.95**
462.7250	15	36.87
467.6500MHz(5W)		
467.6500	20	36.87

13. TEST RESULTS

13.1. SAR Test Results Summary

13.1.1. Test position and configuration

Face up SAR was performed with the device configured in the positions according to KDB 643646 and Body SAR was performed with the device configured with all accessories close to the Flat Phantom.

13.1.2. Operation Mode

- Set the EUT to maximum output power level and transmit on lower, middle and top channel with 100% duty cycle individually during SAR measurement.
- Per KDB 643646 D01, Passive body-worn and audio accessories generally do not apply to the head SAR of PTT radios. Head SAR is measured with the front surface of the radio positioned at 2.5 cm parallel to a flat phantom.
- Per KDB 643646 D01, Body SAR is measured with the radio placed in a body-worn accessory, positioned against a flat phantom, representative of the normal operating conditions expected by users and typically with a standard default audio accessory supplied with the radio.

  When testing antennas with the default battery: the same test measurement with head part.
- The EUT only contains the Testing antenna, Standard battery and default body-worn accessory specified by customer. The earphone is only for testing

13.1.3. Antenna Location: (back view)

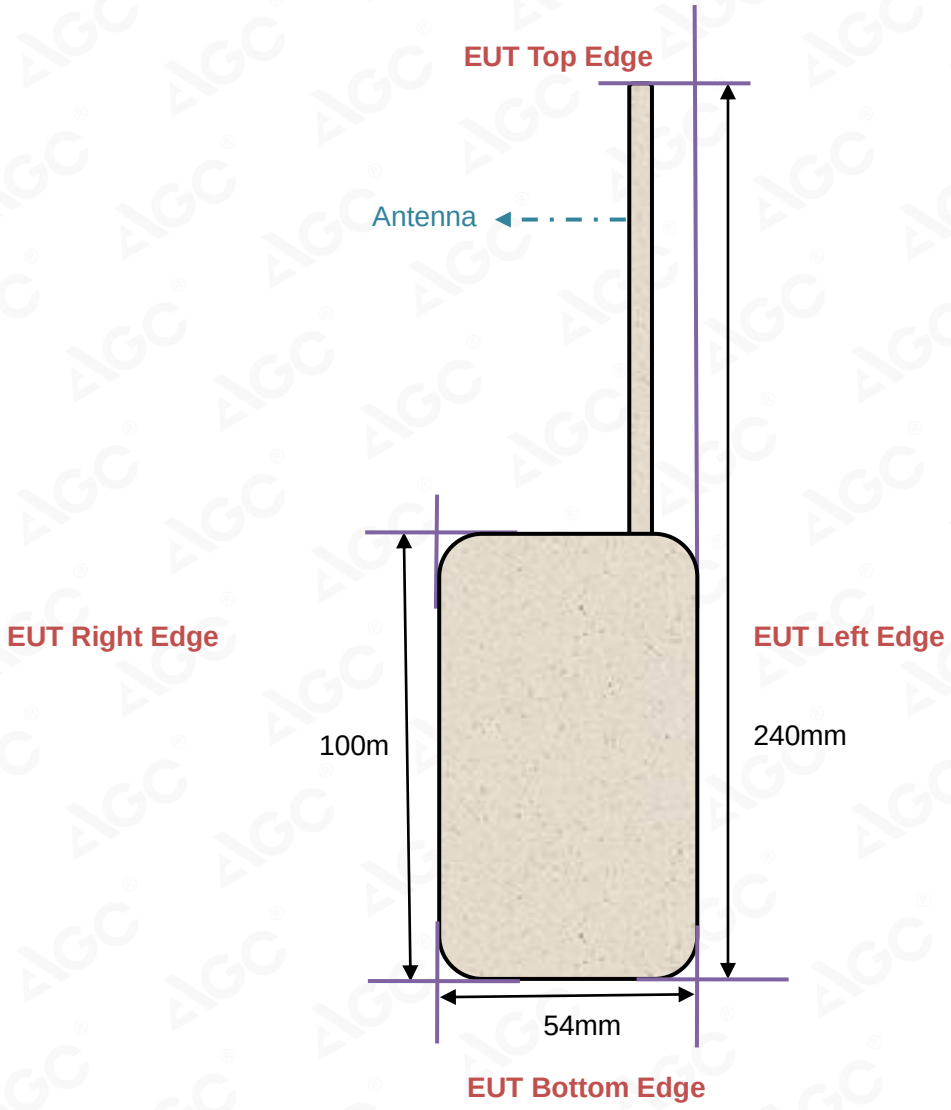

13.1.4. SAR Test Results Summary

UHF

SAR MEASUREMENT									
Depth of Liquid (cm):>15				Relative Humidity (%): 57.2					
Product: TWO WAY RADIO									
Test Mode: Hold to Face with 2.5 cm separation & body back touch with clip									
Position	**Freq. (MHz)**	**Separation (KHz)**	**Power Drift (±0.2dB)**	**SAR 1g with 100% duty Cycle (W/kg)**	**SAR 1g with 50% duty cycle (W/Kg)**	**Max. Tune-up Power (dBm)**	**Meas. output Power (dBm)**	**Scaled SAR (W/Kg)**	**Limit W/kg**
462.5625MHz-462.7125MHz(5W)									
Face Up	462.6375	12.5	-0.12	**0.772**	0.386	36.99	36.91	**0.393**	1.6
Back Touch +Belt Clip + headset	462.6375		0.05	**1.253**	0.6265	36.99	36.91	**0.638**	1.6
462.5500MHz-462.7250MHz(5W)									
Face Up	462.6500	12.5	-0.32	**0.713**	0.3565	36.99	36.95	**0.360**	1.6
Back Touch +Belt Clip + headset	462.6500		0.26	**1.325**	0.6625	36.99	36.95	**0.669**	1.6
467.6500MHz(5W)									
Face Up	467.6500	12.5	0.21	**1.239**	0.6195	36.99	36.87	**0.637**	1.6
Back Touch +Belt Clip + headset	467.6500		-0.07	**1.470**	0.735	36.99	36.87	**0.756**	1.6

Note:

1. During the test, EUT power is 5 W&0.5W with 100% duty cycle;
2. There is just default battery and antenna in this project;

APPENDIX A. SAR SYSTEM CHECK DATA

Test Laboratory: AGC Lab **Test date: May 23,2020**
System Check Head 450MHz
DUT: Dipole 450 MHz Type: SID 450
Communication System: CW; Communication System Band: D450 (450.0 MHz); Duty Cycle: 1:1; Conv.F=1.42
Frequency: 450MHz; Medium parameters used: f = 450MHz; σ= 0.85 mho/m; εr =42.51 ; ρ = 1000 kg/m³ ;
Phantom Type: Flat Section; Input Power=18dBm
Ambient temperature (℃): 20.7, Liquid temperature (℃): 20.4

SATIMO Configuration:
• Probe: SSE2; Calibrated: Jun. 04,2019; Serial No.: SN 41/18 EPGO334
• Sensor-Surface: 4mm (Mechanical Surface Detection)
• Phantom: ELLI39 Phantom
• Measurement SW: OpenSAR V4_02_35

Configuration/System Check CW 450 MHz Head/Area Scan: Measurement grid: dx=8mm,dy=8mm
Configuration/System Check CW 450 MHz Head /Zoom Scan : Measurement grid: dx=8mm, dy=8mm, dz=5mm,

SURFACE SAR	VOLUME SAR
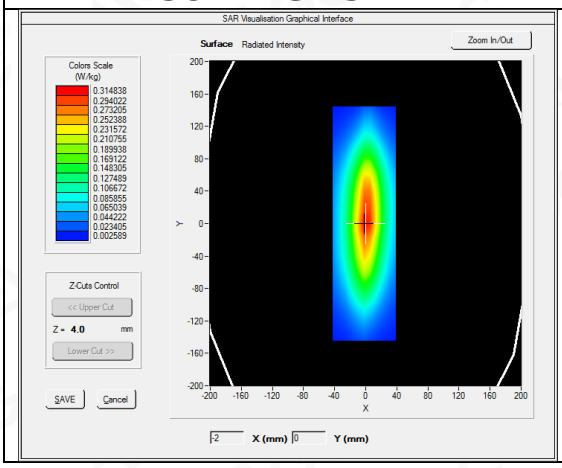	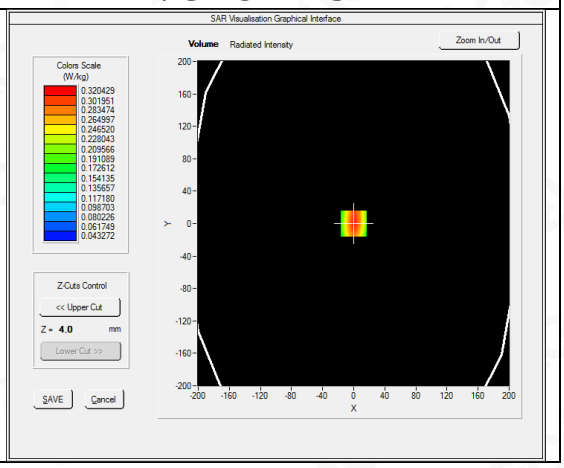

Maximum location: X=0.00, Y=0.00
SAR Peak: 0.44 W/kg

SAR 10g (W/Kg)	0.205334
SAR 1g (W/Kg)	0.306938

Z (mm)	0.00	4.00	9.00	14.00	19.00	24.00	29.00
SAR (W/Kg)	0.4390	0.3204	0.2211	0.1602	0.1176	0.0865	0.0647

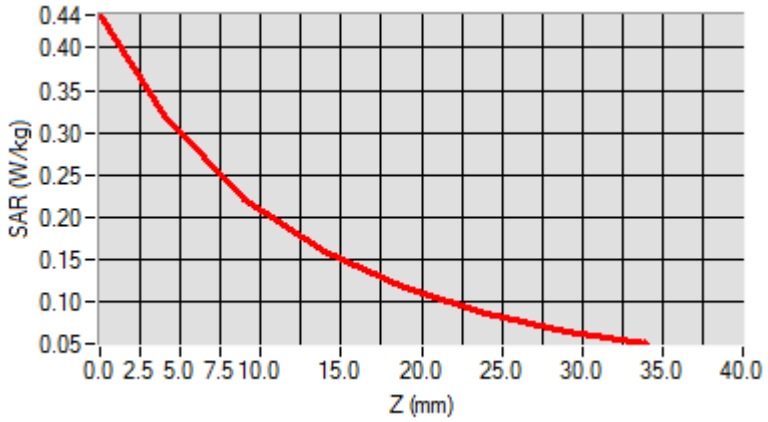

3D screen shot	Hot spot position
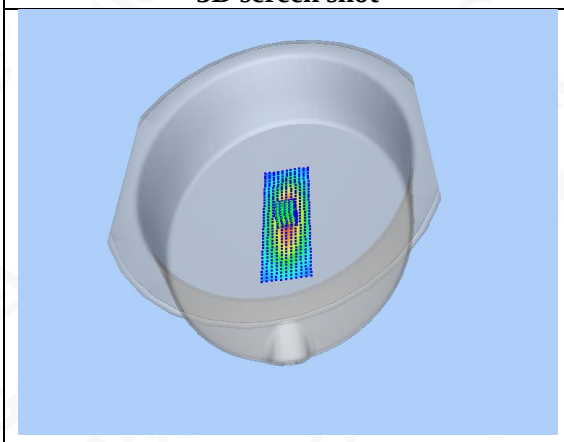	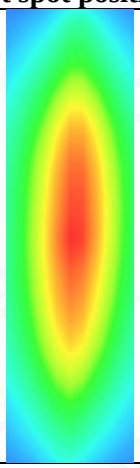

APPENDIX B. SAR MEASUREMENT DATA

462.5625MHz-462.7125MHz(5W)
Test Laboratory: AGC Lab **Date: May 23,2020**
450 Mid- face up 2.5cm (12.5 KHz)
DUT: TWO WAY RADIO; Type: P53U

Communication System: 450; Communication System Band: CW 450 MHz;; Duty Cycle: 1:1; Conv.F=1.42
Frequency: 462.6375 MHz; Medium parameters used: f = 450MHz; σ= 0.87 mho/m; εr =41.76; ρ= 1000 kg/m³ ;
Phantom Type: Flat Section
Ambient temperature (℃): 20.7, Liquid temperature (℃): 20.4

SATIMO Configuration:
• Probe: SSE2; Calibrated: Jun. 04,2019; Serial No.: SN 41/18 EPGO334
• Sensor-Surface: 4mm (Mechanical Surface Detection)
• Phantom: ELLI39 Phantom
• Measurement SW: OpenSAR V4_02_35

Configuration/450 for Mid-Face up/Area Scan: Measurement grid: dx=8mm, dy=8mm
Configuration/450 for Mid-Face up/Zoom Scan: Measurement grid: dx=8mm, dy=8mm, dz=5mm;

Area Scan	dx=8mm dy=8mm, h= 5.00 mm
Zoom Scan	5x5x7,dx=8mm dy=8mm dz=5mm
Phantom	ELLI
Device Position	Face up 2.5 cm separation to Phantom
Band	450
Channels	Middle
Signal	Crest factor: 1

SURFACE SAR	VOLUME SAR
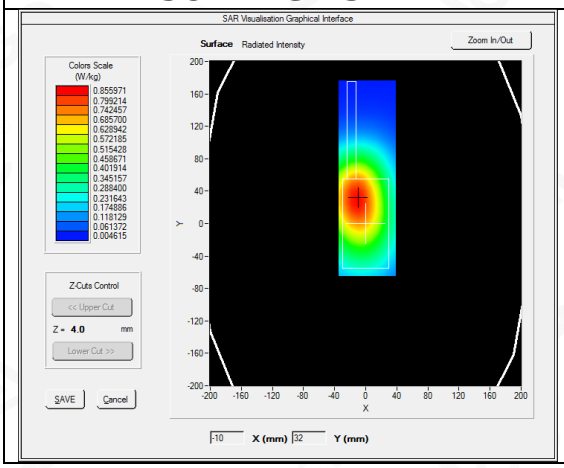	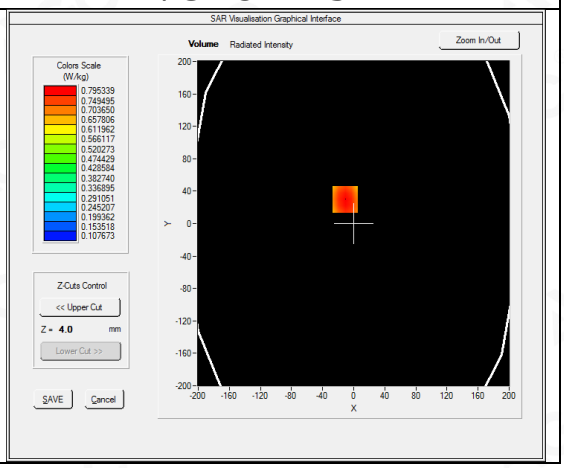

Maximum location: X=-11.00, Y=30.00
SAR Peak: 1.02 W/kg

SAR 10g (W/Kg)	0.554163
SAR 1g (W/Kg)	0.771880

Z (mm)	0.00	4.00	9.00	14.00	19.00	24.00	29.00
SAR (W/Kg)	1.0182	0.7953	0.5854	0.4340	0.3221	0.2385	0.1764

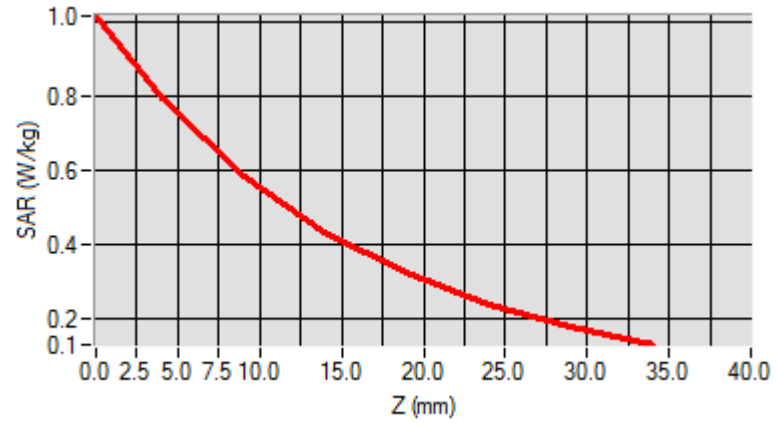

3D screen shot	Hot spot position
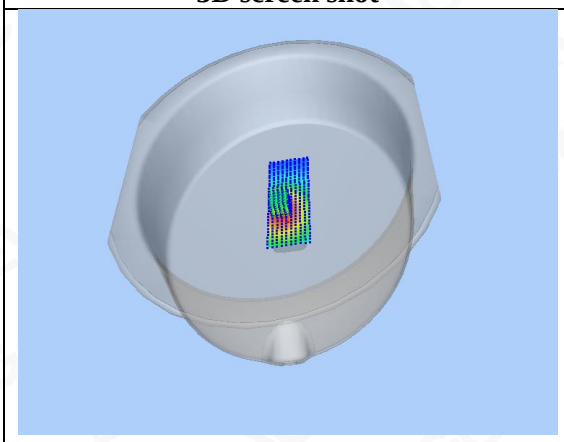	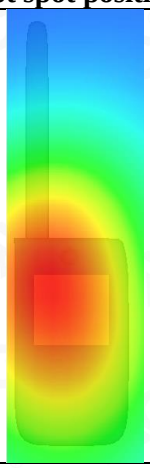

Test Laboratory: AGC Lab **Date: May 23,2020**
450 Mid -Body –Touch (12.5 KHz)
DUT: TWO WAY RADIO; Type: P53U

Communication System: 450; Communication System Band: CW 450 MHz;; Duty Cycle: 1:1; Conv.F=1.42
Frequency: 462.6375 MHz; Medium parameters used: f = 450 MHz; σ= 0.87 mho/m; εr =41.76; ρ= 1000 kg/m ;
Phantom Type: Flat Section
Ambient temperature (℃): 20.7, Liquid temperature (℃): 20.4

SATIMO Configuration:
• Probe: SSE2; Calibrated: Jun. 04,2019; Serial No.: SN 41/18 EPGO334
• Sensor-Surface: 4mm (Mechanical Surface Detection)
• Phantom: ELLI39 Phantom
• Measurement SW: OpenSAR V4_02_35

Configuration/450 for Mid-Body Back /Area Scan: Measurement grid: dx=8mm, dy=8mm
Configuration/450 for Mid-Body Back /Zoom Scan: Measurement grid: dx=8mm, dy=8mm, dz=5mm;

Area Scan	dx=8mm dy=8mm, h= 5.00 mm
Zoom Scan	5x5x7,dx=8mm dy=8mm dz=5mm
Phantom	ELLI
Device Position	Back close to Phantom with Accessories
Band	450
Channels	Middle
Signal	Crest factor: 1

SURFACE SAR	VOLUME SAR
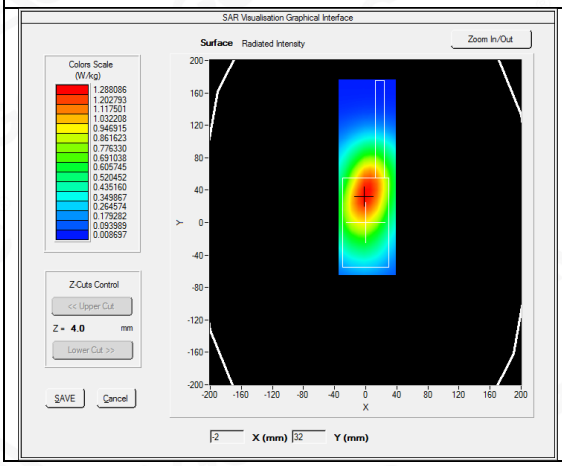	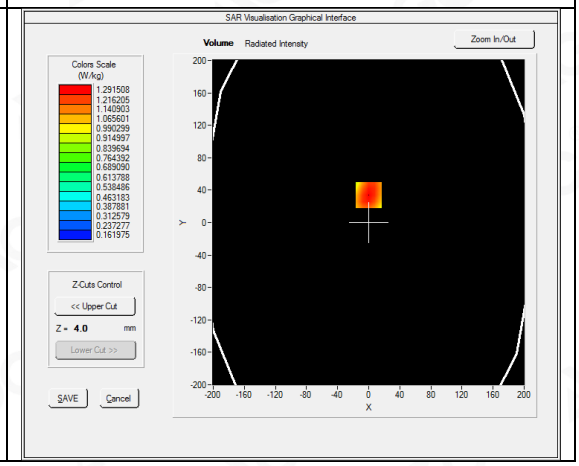

Maximum location: X=0.00, Y=34.00
SAR Peak: 1.67 W/kg

SAR 10g (W/Kg)	0.890162
SAR 1g (W/Kg)	1.252809

Z (mm)	0.00	4.00	9.00	14.00	19.00	24.00	29.00
SAR (W/Kg)	1.6697	1.2915	0.9454	0.7030	0.5263	0.3937	0.2951

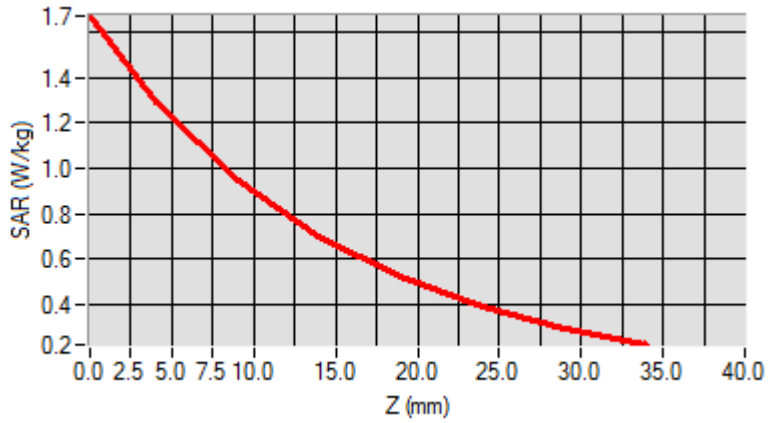

3D screen shot	Hot spot position
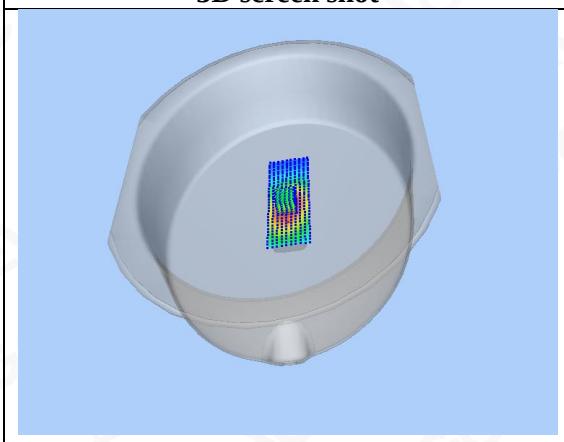	

462.5500MHz -462.7250MHz(5W)
Test Laboratory: AGC Lab **Date: May 23,2020**
450 Mid- face up 2.5cm (12.5 KHz)
DUT: TWO WAY RADIO; Type: P53U

Communication System: 450; Communication System Band: CW 450 MHz;; Duty Cycle: 1:1; Conv.F=1.42
Frequency: 462.6500MHz; Medium parameters used: f = 450MHz; σ= 0.87 mho/m; εr =41.76; ρ= 1000 kg/m³ ;
Phantom Type: Flat Section
Ambient temperature (℃): 20.7, Liquid temperature (℃): 20.4

SATIMO Configuration:
• Probe: SSE2; Calibrated: Jun. 04,2019; Serial No.: SN 41/18 EPGO334
• Sensor-Surface: 4mm (Mechanical Surface Detection)
• Phantom: ELLI39 Phantom
• Measurement SW: OpenSAR V4_02_35

Configuration/450 for Mid-Face up/Area Scan: Measurement grid: dx=8mm, dy=8mm
Configuration/450 for Mid-Face up/Zoom Scan: Measurement grid: dx=8mm, dy=8mm, dz=5mm;

Area Scan	dx=8mm dy=8mm, h= 5.00 mm
Zoom Scan	5x5x7,dx=8mm dy=8mm dz=5mm
Phantom	ELLI
Device Position	Face up 2.5 cm separation to Phantom
Band	450
Channels	Middle
Signal	Crest factor: 1

SURFACE SAR	VOLUME SAR
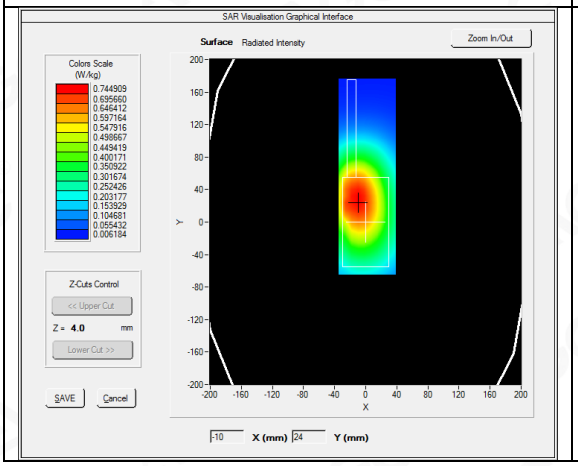	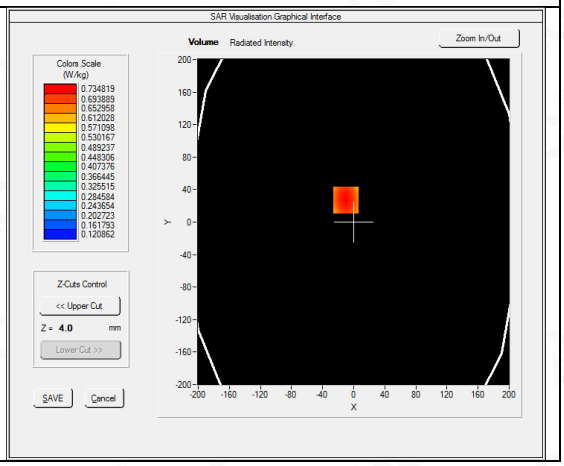

Maximum location: X=-10.00, Y=27.00
SAR Peak: 0.93 W/kg

SAR 10g (W/Kg)	0.522987
SAR 1g (W/Kg)	0.713135

Z (mm)	0.00	4.00	9.00	14.00	19.00	24.00	29.00
SAR (W/Kg)	0.9269	0.7348	0.5522	0.4186	0.3187	0.2425	0.1851

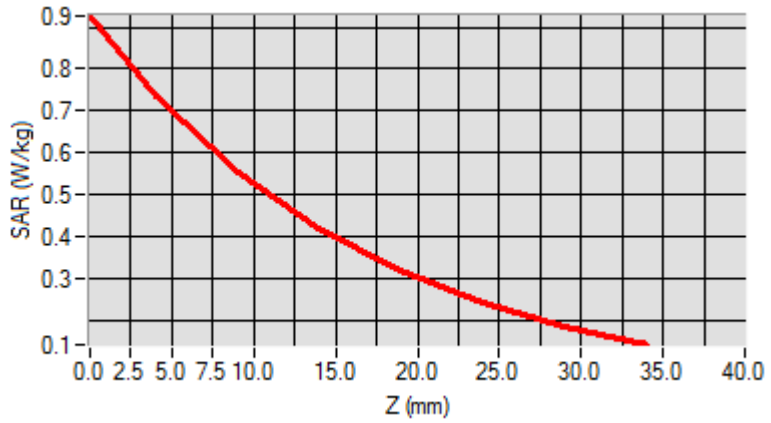

3D screen shot	Hot spot position
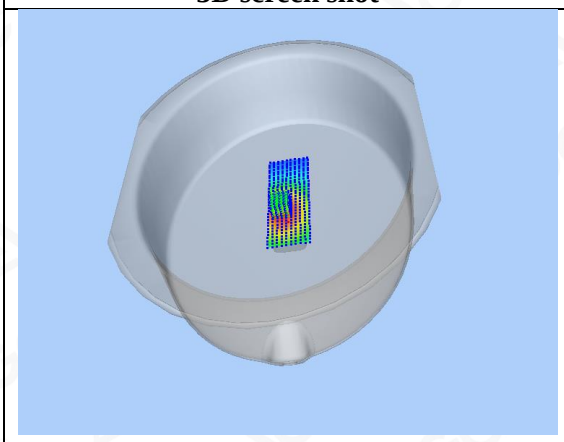	

Test Laboratory: AGC Lab **Date: May 23,2020**
450 Mid -Body –Touch (12.5 KHz)
DUT: TWO WAY RADIO; Type: P53U

Communication System: 450; Communication System Band: CW 450 MHz;; Duty Cycle: 1:1; Conv.F=1.42
Frequency: 462.6500 MHz; Medium parameters used: f = 450 MHz; σ= 0.87 mho/m; εr =41.76; ρ= 1000 kg/m ;
Phantom Type: Flat Section
Ambient temperature (℃): 20.7, Liquid temperature (℃): 20.4

SATIMO Configuration:
• Probe: SSE2; Calibrated: Jun. 04,2019; Serial No.: SN 41/18 EPGO334
• Sensor-Surface: 4mm (Mechanical Surface Detection)
• Phantom: ELLI39 Phantom
• Measurement SW: OpenSAR V4_02_35

Configuration/450 for Mid-Body Back /Area Scan: Measurement grid: dx=8mm, dy=8mm
Configuration/450 for Mid-Body Back /Zoom Scan: Measurement grid: dx=8mm, dy=8mm, dz=5mm;

Area Scan	dx=8mm dy=8mm, h= 5.00 mm
Zoom Scan	5x5x7,dx=8mm dy=8mm dz=5mm
Phantom	ELLI
Device Position	Back close to Phantom with Accessories
Band	450
Channels	Middle
Signal	Crest factor: 1

SURFACE SAR	VOLUME SAR
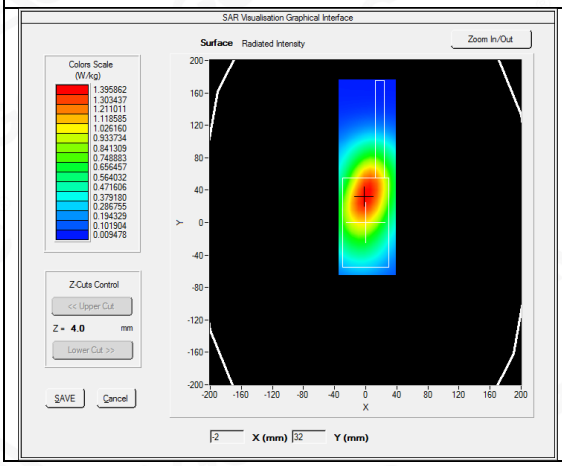	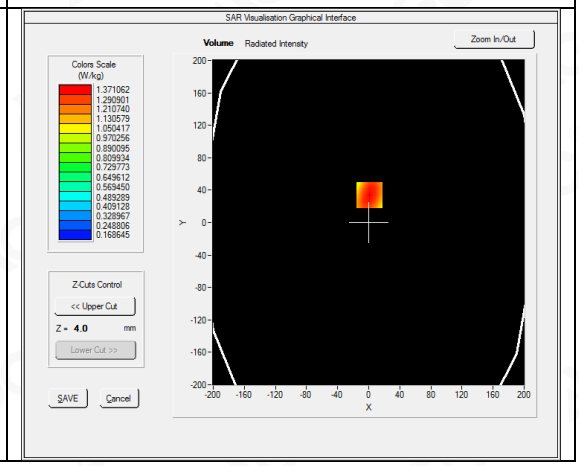

Maximum location: X=1.00, Y=34.00
SAR Peak: 1.75 W/kg

SAR 10g (W/Kg)	0.950057
SAR 1g (W/Kg)	1.325388

Z (mm)	0.00	4.00	9.00	14.00	19.00	24.00	29.00
SAR (W/Kg)	1.7469	1.3711	1.0131	0.7518	0.5598	0.4174	0.3120

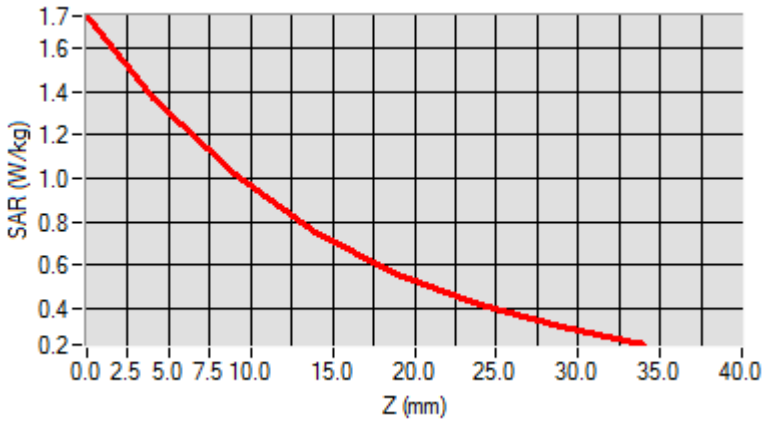

3D screen shot	Hot spot position
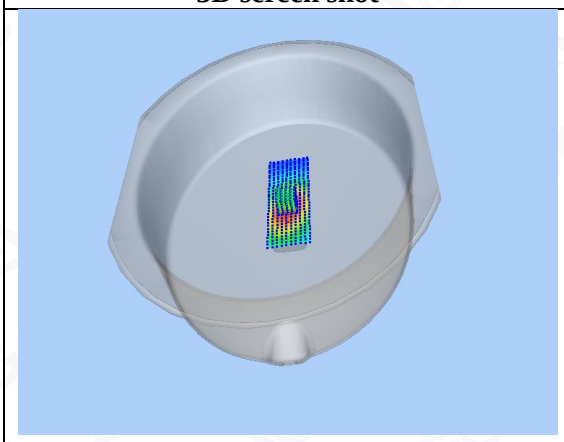	

467.6500MHz (5W)
Test Laboratory: AGC Lab **Date: May 23,2020**
450 Mid- face up 2.5cm (12.5 KHz)
DUT: TWO WAY RADIO; Type: P53U

Communication System: 450; Communication System Band: CW 450 MHz;; Duty Cycle: 1:1; Conv.F=1.42
Frequency: 467.6500 MHz; Medium parameters used: f = 450MHz; σ= 0.90 mho/m; εr =40.68; ρ= 1000 kg/m³ ;
Phantom Type: Flat Section
Ambient temperature (℃): 20.7, Liquid temperature (℃): 20.4

SATIMO Configuration:
• Probe: SSE2; Calibrated: Jun. 04,2019; Serial No.: SN 41/18 EPGO334
• Sensor-Surface: 4mm (Mechanical Surface Detection)
• Phantom: ELLI39 Phantom
• Measurement SW: OpenSAR V4_02_35

Configuration/450 for Mid-Face up/Area Scan: Measurement grid: dx=8mm, dy=8mm
Configuration/450 for Mid-Face up/Zoom Scan: Measurement grid: dx=8mm, dy=8mm, dz=5mm;

Area Scan	dx=8mm dy=8mm, h= 5.00 mm
Zoom Scan	5x5x7,dx=8mm dy=8mm dz=5mm
Phantom	ELLI
Device Position	Face up 2.5 cm separation to Phantom
Band	450
Channels	Middle
Signal	Crest factor: 1

SURFACE SAR	VOLUME SAR
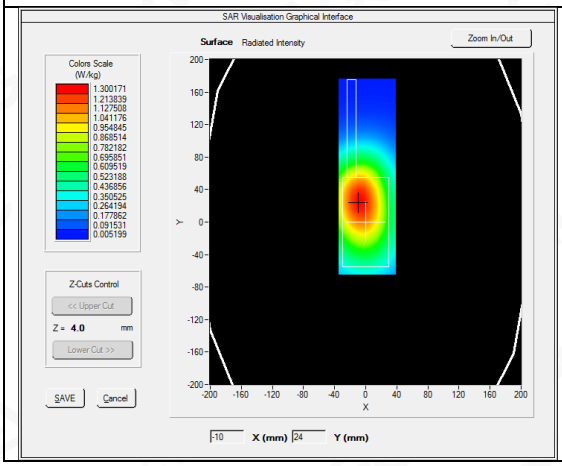	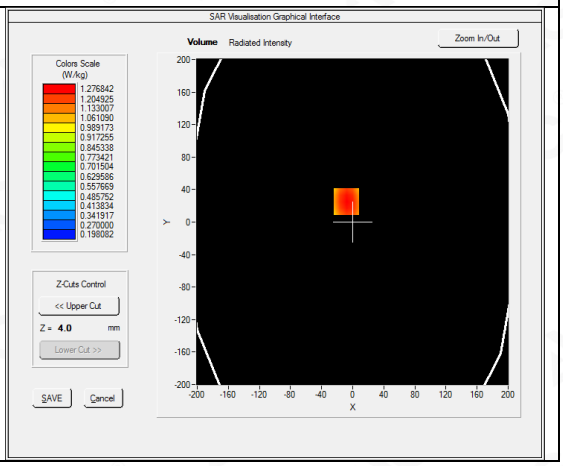

Maximum location: X=-8.00, Y=25.00
SAR Peak: 1.62 W/kg

SAR 10g (W/Kg)	0.899935
SAR 1g (W/Kg)	1.238680

Z (mm)	0.00	4.00	9.00	14.00	19.00	24.00	29.00
SAR (W/Kg)	1.6212	1.2768	0.9515	0.7163	0.5409	0.4088	0.3100

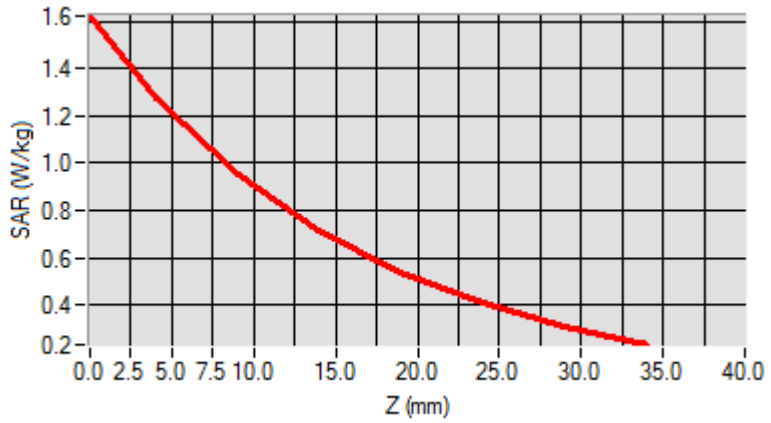

3D screen shot	Hot spot position
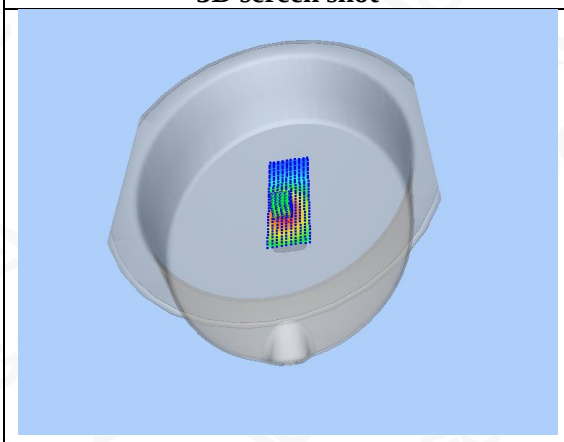	

Test Laboratory: AGC Lab **Date: May 23,2020**
450 Mid -Body –Touch (12.5 KHz)
DUT: TWO WAY RADIO; Type: P53U

Communication System: 450; Communication System Band: CW 450 MHz;; Duty Cycle: 1:1; Conv.F=1.42
Frequency: 467.6500 MHz; Medium parameters used: f = 450 MHz; σ= 0.90 mho/m; εr =40.68; ρ= 1000 kg/m ;
Phantom Type: Flat Section
Ambient temperature (℃): 20.7, Liquid temperature (℃): 20.4

SATIMO Configuration:
• Probe: SSE2; Calibrated: Jun. 04,2019; Serial No.: SN 41/18 EPGO334
• Sensor-Surface: 4mm (Mechanical Surface Detection)
• Phantom: ELLI39 Phantom
• Measurement SW: OpenSAR V4_02_35

Configuration/450 for Mid-Body Back /Area Scan: Measurement grid: dx=8mm, dy=8mm
Configuration/450 for Mid-Body Back /Zoom Scan: Measurement grid: dx=8mm, dy=8mm, dz=5mm;

Area Scan	dx=8mm dy=8mm, h= 5.00 mm
Zoom Scan	5x5x7,dx=8mm dy=8mm dz=5mm
Phantom	ELLI
Device Position	Back close to Phantom with Accessories
Band	450
Channels	Middle
Signal	Crest factor: 1

SURFACE SAR	VOLUME SAR
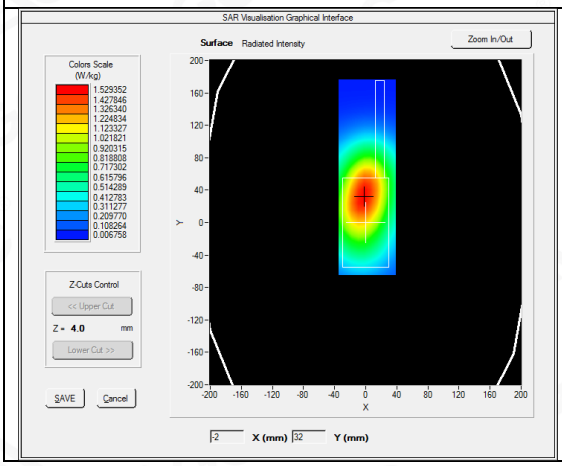	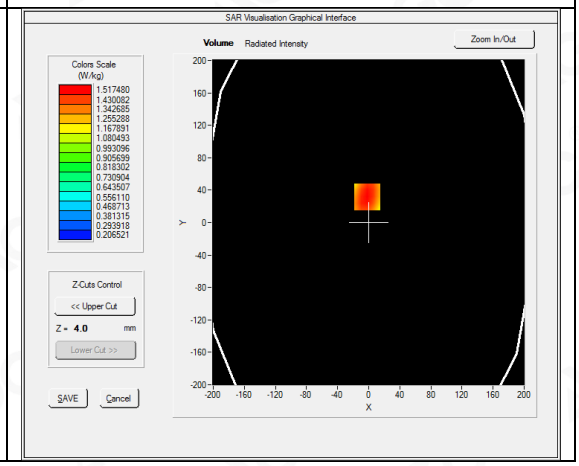

Maximum location: X=-2.00, Y=32.00
SAR Peak: 1.94 W/kg

SAR 10g (W/Kg)	1.055581
SAR 1g (W/Kg)	1.469861

Z (mm)	0.00	4.00	9.00	14.00	19.00	24.00	29.00
SAR (W/Kg)	1.9297	1.5175	1.1270	0.8421	0.6318	0.4732	0.3550

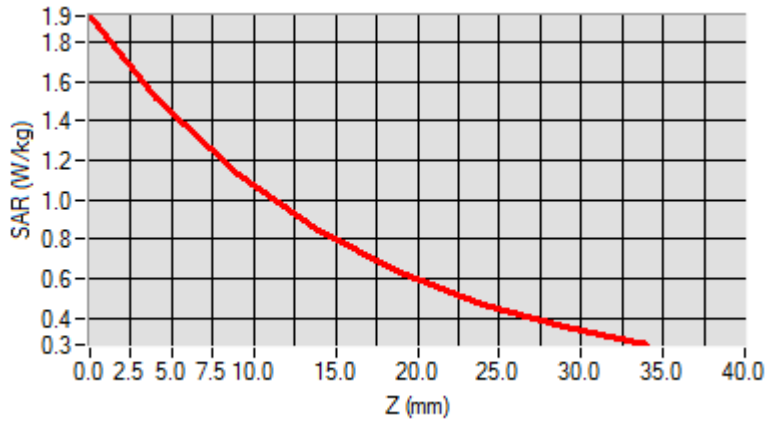

3D screen shot	Hot spot position
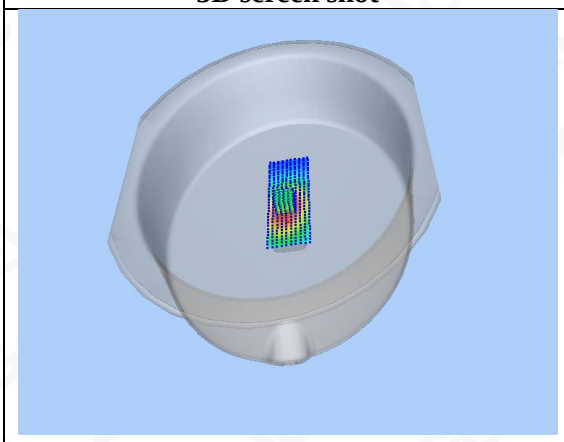	

APPENDIX C. TEST SETUP PHOTOGRAPHS

Face Up with 2.5 cm Separation Distance.

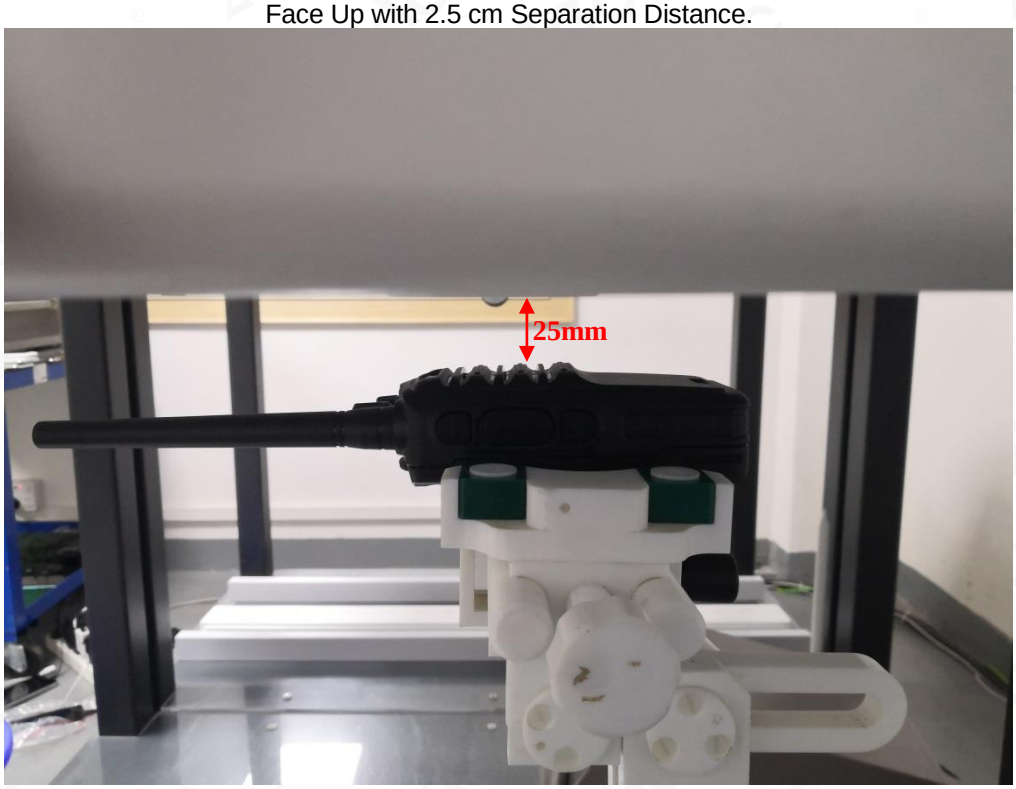

Body Back Touch with all accessories

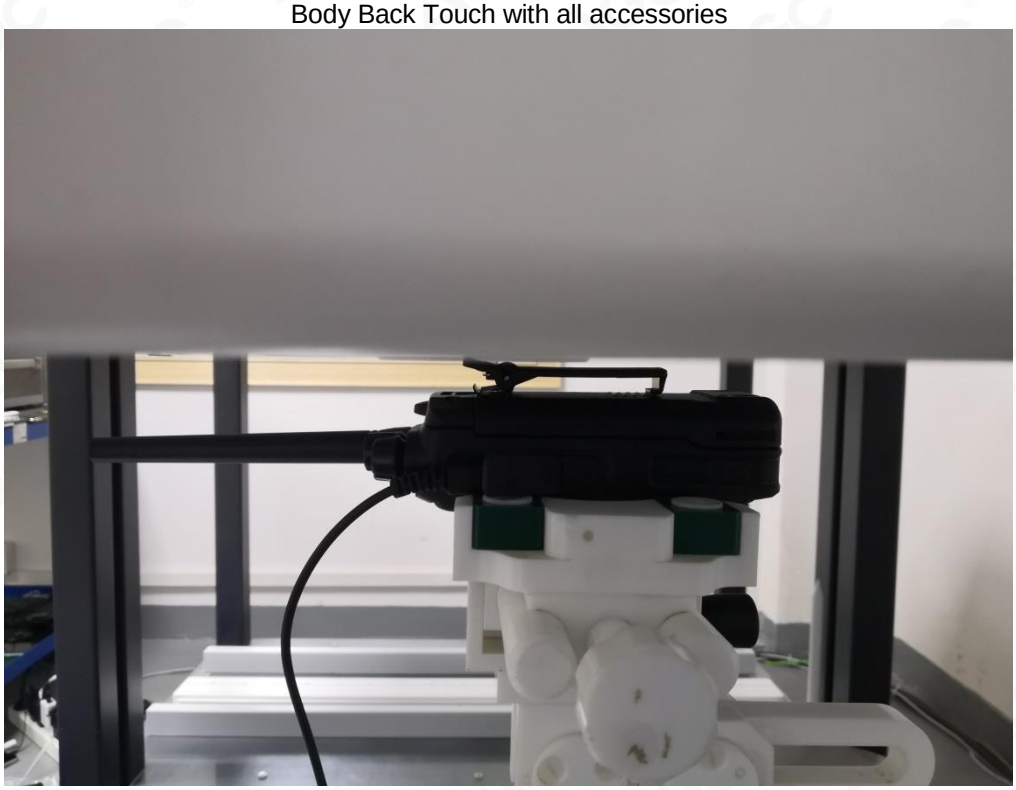

The thickness of EUT is 3.5 cm

Note : The headset is just for testing. This tested and electrically similar headsets may be used.

DEPTH OF THE LIQUID IN THE PHANTOM—ZOOM IN

Note：The position used in the measurement were according to IEEE 1528-2013

450MHz body
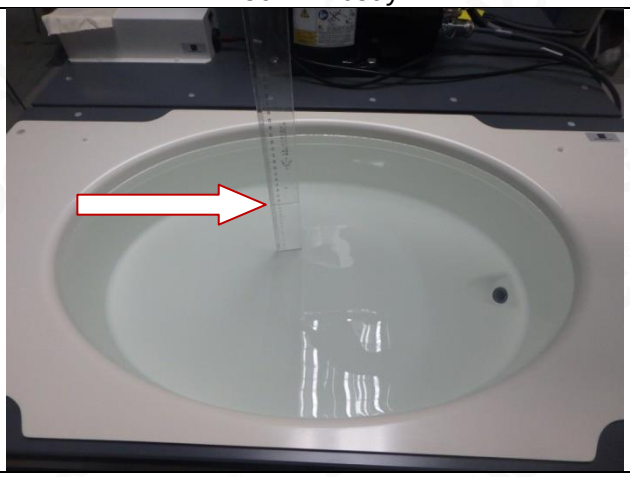

APPENDIX D. CALIBRATION DATA

Refer to Attached files.