8. RADIO OVERVIEW:

8.1.-RADIO OVERVIEW:

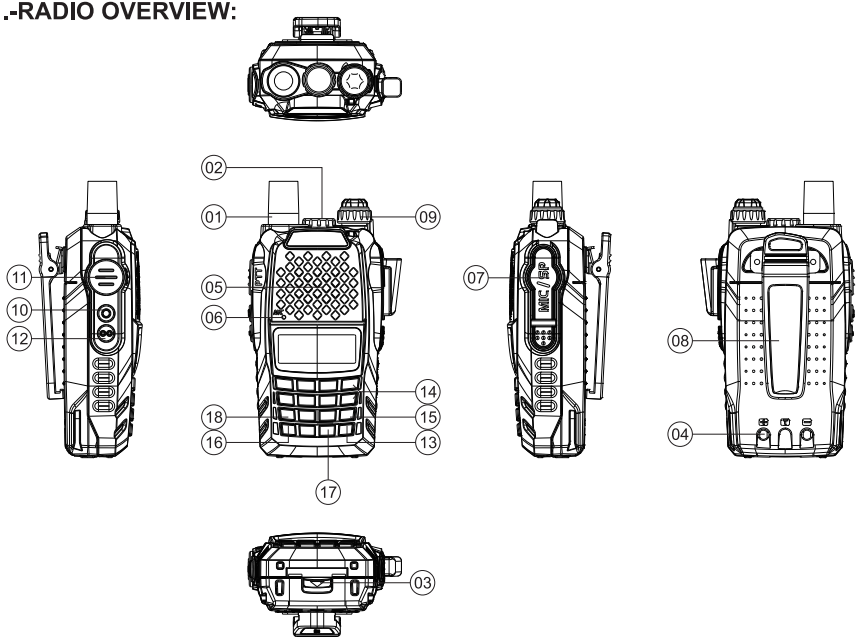

01	Antenna	10	SK-side key1/CALL(radio, alarm)
02	Flashlight	11	PTT key(push-to-talk)
03	Battery remove button	12	SK-side key2/MONI(flashlight, monitor)
04	Battery pack	13	【MENU】key
05	Speaker	14	【▲】【▼】key
06	Microphone	15	【EXIT】Key
07	Accessory jack (SP.&MIC)	16	∗/AB
08	Belt Clip	17	#SCAN
09	Knob (ON/OFF, volume)	18	Numeric Keypad

8.2. COMMAND/KEY DEFINITION:

【PTT】(PUSH-TO-TALK):
Press and hold down the【PTT】button to transmit; release it to receive.

SK-SIDE KEY1/【MONI】:
Press the【MONI】button, to turn on the flashlight; Press it again to turn off. Press and hold on the【MONI】button, to monitor the signal.

SK-SIDE KEY2/【CALL】:
Press the【CALL】button, to activate the FM Radio; Press it again to deactivate the FM Radio. Press and hold on the【CALL】button, to activate the alarm function; Press and hold it again, to deactivate the alarm function.

【V/M 】BUTTON:
Press the【 V/M 】button, to switch the frequency mode and channel mode.

【*A/B 】BUTTON:
Press the【 *A/B 】button, to switch frequency display.
To cancel /clear or exit.

【#SCAN 】KEY:
Press the【 #SCAN 】key to activate the Reverse function, it will exchange a separate reception and transmission frequency.
Press the【 #SCAN 】key for 2 seconds to start scanning(frequency/channel).
While FM radio being activated, press the【 #SCAN 】key to search FM radio station.
While setting the RX CTCSS/DCS, press the key【 #SCAN 】to scan the RX CTCSS/DCS.

FUNCTION KEYPAD:

【 MENU 】key:
To enter the menu of the radio and confirm the setting.
Press【 MENU 】key for 2 seconds to lock/unlock the keypad.

【▲】【▼】key:
Press and hold【 ▲ 】or【 ▼ 】key for frequency up or down fast.
Press 【 ▲ 】or【 ▼ 】key, the scanning will be opposite.

NUMERIC KEYPAD:
Used to enter information for programming the radio’s lists and the non-standard CTCSS
Under transmission mode, press the numeric key to send the signal code (the code should be set by PC software).

9. 'LCD' DISPLAY:

The display icons appear when certain operations or specific features are activated.

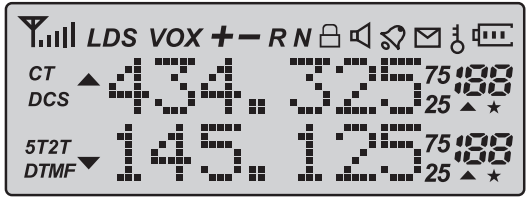

Icon	Description		
CT	'CTCSS' activated	R	Reverse function activated.
DCS	'DCS' activated.	N	Wide Band selected.
+	Frequency Shift +		Battery Level indicator
−	Frequency Shift -		Keypad lock function activated.
+−	Frequency offset direction for accessing repeaters.	L	Low transmit power.
S	Dual Watch/Dual Reception functions activated.	▲▼	Operation frequency.
VOX	Function 'VOX' enabled.		Signal Strength Level.
		88	Operating channel.

10. 1750 Hz TONE FOR ACCESS TO REPEATERS:

The user needs to establish long distance communications through an amateur radio repeater which is activated after receiving a 1750 Hz tone. Press and hold on the【PTT】,then press the【CALL】button to transmit a 1750Hz tone.

11. BASIC OPERATION:

11.1. RADIO ON-OFF/VOLUME CONTROL

Make sure the antenna and battery are installed correctly and the battery charged.
Rotate the knob clockwise to turn the radio on, and rotate the knob fully counter-clockwise until a 'click' is heard to turn the radio off. Turn the knob clockwise to increase the volume, or counter-clockwise to decrease the volume

Caution: The radio will not sound 'click' if you turn off the voice prompt function.
The boot mode display can be set from Function 38

11.2. Transmit and Receive

Choose the correct channel No. or enter the frequency which you need, Then press and hold【PTT】button, the radio is transmitting now, then talk to the microphone, your sound will be transmitted. Release PTT to receive.
When you press PTT, the LCD shows L, it means the radio is in low power
Press【PTT】and then press【CALL】to transmit 1750HZ
Press【PTT】then press DTMF Numbers to transmit DTMF

11.3. FUNCTION "VOX" (VOICE OPERATED TRANSMISSION)

This function is not necessary to push the【PTT】on the transceiver for a transmission. Transmission is activated automatically by detecting the radio voice. When finish speaking, the transmission automatically terminated and the transceiver will automatically receive signal. Be sure to adjust the VOX Gain level to an appropriate sensitivity to allow smooth transmission.

Operate:

1. Press【PTT】to menu setting
2. Press【▲】or【▼】to Function 4, the screen shows VOX OFF
3. Press【MENU】, sound "VOX" then press【▲】or【▼】to choose the level 1-10, 10 is the most sensitive level
4. Press【MENU】to confirm the setting. The LCD screen shows VOX after this function was setting,for example, 435.500
5. You can choose the VOX level to OFF, and press【MENU】then you will off this function

11.4. AUTOLK (keypad Locked Automatically)

The transceiver has two options: auto lock and manual lock

OFF: Turn off auto lock

ON: When you set auto lock the keyboard press【MENU】for more than 2 seconds

Operate:

In standby, press【MENU】+【number key 24】, then the screen will display "AUTOLK"

Press【MENU】enter, then press [up] and [down] to select keyboard lock ON or OFF

Press【MENU】to confirm, then press【*/AB】to return to standby.

11.5. VFO/Channel mode

Press the【V/M】button, to switch the frequency mode and channel mode. the screen shows or the lower right corner of the LCD displays the channel number, which means it*s in the channel mode. In this way, you can also change the channel mode to VFO

11.6. SELECTING A FREQUENCY OR CHANNEL

Press the key【▲】or【▼】to select the desired frequency/channel you want. The display shows the frequency / channel selected.

Press and hold down the key【▲】or【▼】for frequency up or down fast.

When the radio is on VFO mode, the frequency can be input by the keypad directly.

Note:
You cannot select a channel without previously stored.

11.7. TDR (Dual Watch/ Dual Reception)

This feature allows you to operate between frequency A and frequency B. Periodically, the transceiver checks whether a signal is received on another frequency that we have scheduled. If you receive a signal, the unit will remain in the frequency until the received signal disappears.

In standby, press【MENU】+ keyboard【7TDR】and then screen will display‘TDR’. Press*MENU* enter, then press【▲】or【▼】to select *TDR* OFF or ON. Press【MENU】to confirm, then press【*/AB】to return to standby.

11.8. DEL-CH (Delete Channel)

In standby, press【MENU】+【Number key 28】and then screen will display‘DEL-CH’

Press【MENU】enter, press【▲】or【▼】to select the channel you wan to delete.

Press【MENU】to confirm, then press【*/AB】to return to standby.

The transceiver has 128 memory channels from 000 to 127. Operate invalid when you into channel without DH- display, it means this channel not parameter.

11.9. MEM-CH (Stored In Memory Channel)

THE INSTRUCTIONS TO SAVE CHANNEL

A complete memory channel includes RX frequency, TX frequency, CTCSS, DCS, RF Power, Bandwidth, PTT-ID, BCL, ANI, Scan add to, Channel Name, etc. **Except for the setting of Scan add to and Channel Name, other settings could be finished by keypad under VFO mode.**

Example: We want programming all the data into CH106, please do as following:

RX Frequency	440.625MHz
TX Frequency	430.625MHz
RX CTCSS	100.0Hz
TX DCS	250.3Hz
RF Power	High
Bandwidth	Wide
PTT-ID	OFF

1. We have to check whether there are any data in CH106 or not. Come to MENU 28, if there is a 'CH' before '106', that means there are data. So please delete it and you will find there is not a 'CH' before '106' , or else you can' t have new data in this channel.
2. Press and hol【MENU】key, then power on, come to VFO mode. Press【*/AB】key to select frequency A (UP).
3. Enter 440.625MHz

4. Now through the MENU, you can set other parameters. CTCSS,DCS, RF Power, Bandwidth, etc. After you finish all the other settings, press【MENU】key, then come to MENU 27, press【MENU】key two times, you will know all the data have been stored into CH106, however now only RX frequency was stored. At the same time, you press【MENU】key another two times,

When transceiver works in frequency mode or in standby, input the frequency and any kind of parameter you want to store.

In standby, press【MENU】+【Number key 27】and then screen will display "MEM-CH" Press【MENU】enter, press【▲】or【▼】to select the desired channel order. Press【MENU】to confirm then press【*/AB】to return to standby.

12. ADVANCED OPERATION:

You can program your transceiver operating in the setup menu to suit your needs or preferences.

12.1. SET MENU DESCRIPTION:

Menu	Function/Description	Available settings
0	SQL (Squelch level)	0-9
1	STEP(Frequency step)	2.5/5/6.25/10/12.5/25kHz
2	TXP(Transmit power)	HIGH/LOW
3	SAVE(Battery save,1:1/1:2/1:3/1:4)	OFF/1/2/3/4
4	VOX(Voice operated transmission)	OFF/0-10
5	W/N(Wideband/narrowband)	WIDE/NARR
6	ABR(Display illumination)	OFF/1/2/3/4/5s
7	TDR(Dual watch/dual reception)	OFF/ON
8	BEEP(Keypad beep)	OFF/ON
9	TOT(Transmission timer)	15/30/45/60.../585/600seconds
10	R-DCS(Reception digital coded squelch)	OFF/D023N...D754I
11	R-CTS(Reception Continuous Tone Coded Squelch)	67.0Hz...254.1Hz
12	T-DCS(Transmission digital coded squelch)	OFF/D023N...D754I
13	T-CTS(Transmission Continuous Tone Coded Squelch)	67.0Hz...254.1Hz
14	VOICE(Voice prompt)	OFF/ON

15	ANI(Automatic number identification of the radio, only can be set by PC software.	
16	DTMFST(The DTMF tone of transmitting code.)	OFF/DT-ST/ANI-ST/DT+ANI
17	S-CODE(Signal code, only could be set by PC software.)	1,...,15 groups
18	SC-REV(Scan resume method)	TO/CO/SE
19	PTT-ID (press or release the PTT button to transmit the signal code)	OFF/BOT/EOT/BOTH
20	PTT-LT(delay the signal code sending)	0,...,30ms
21	MDF-A(under channel mode, A channel displays. Note: name display only can be set by PC software.	FREQ/CH/NAME
22	MDF-B(under channel mode, B channel displays. Note: name display only can be set by PC software.	FREQ/CH/NAME
23	BCL(busy channel lockout)	OFF/ON
24	AUTOLK(keypad locked automatically)	OFF/ON
25	SFT-D(direction of frequency shift)	OFF/+/-
26	OFFSET(frequency shift)	00.000...69.990
27	MEMCH(stored in memory channels)	000,...127
28	DELCH(delete the memory channels)	000,...127
29	WT-LED(illumination display color of standby)	OFF/BLUE/ORANGE/PURPLE
30	RX-LED(illumination display color of reception)	OFF/BLUE/ORANGE/PURPLE
31	TX-LED(illumination display color of transmitting)	OFF/BLUE/ORANGE/PURPLE

32	AL-MOD(alarm mode)	SITE/TONE/CODE
33	BAND(band selection)	VHF/UHF
34	TCALL(Optional signaling)	OFF/1000,1450,1750,2100
35	STE(Tail Tone Elimination)	OFF/ON
36	RP_STE (Tail tone elimination in communication through repeater)	OFF/1,2,3...10
37	RPT_RL(Delay the tail tone of repeater)	OFF/1,2,3...10
38	PONMGS(Boot display)	FULL/MGS
39	ROGER(tone end of transmission)	ON/OFF
40	RESET (Restore to default setting)	VFO/ALL

12.2. SHORTCUT MENU OPERATION:

1. Press the key【MENU】, then press the key【▲】or【▼】to select the desired menu.
2. Press the key【MENU】again, come to the parameter setting.
3. Press the key【▲】or【▼】to select the desired parameter.
4. Press the key【MENU】to confirm and save, press the key【*/AB】to cancel setting or clear the input.

Note:
Under channel mode, the following menu settings are invalid: CTCSS,DCS,W/N,PTT-ID,BCL,SCAN ADD TO,S-CODE,CHANNEL NAME. Only the H/L power could be changed.

12.3. “SQL” (SQUELCH):

The squelch mute the speaker of the transceiver in the absence of reception. With the squelch level correctly set, you will hear sound only while actually receiving signals and significantly reduces battery current consumption. It is recommended that you set Level 5.

12.4. FUNCTION “VOX” (VOICE OPERATED TRANSMISSION):

This function is not necessary to push the【PTT】on the transceiver for a transmission. Transmission is activated automatically by detecting the radio voice. When finish speaking, the transmission automatically terminated and the transceiver will automatically receive signal. Be sure to adjust the VOX Gain level to an appropriate sensitivity to allow smooth transmission.

12.5. SELECT WIDEBAND OR NARROW BAND “W/N” :

In areas where the RF signals are saturated, you must use the narrow band of transmission to avoid interference in adjacent channels.

12.6. TDR (DUAL WATCH/DUAL RECEPTION):

This feature allows you to operate between frequency A and frequency B. Periodically, the transceiver checks whether a signal is received on another frequency that we have scheduled. If you receive a signal, the unit will remain in the frequency until the received signal disappears.

12.7. TOT(TRANSMISSION TIMER):

This function can automatically control the time we transmit each time you press【PTT】on the transceiver. This feature is very useful to avoid overheating excessive power transistors of the transceiver. The transceiver will be off transmission automatically once the set time.

12.8. CTCSS/DCS:

In some cases only want to establish communications in a closed user group at a particular frequency or channel, for it will use "CTCSS" or code "DCS" for reception.
The "squelch" opens only when receiving a frequency with "CTCSS" or codes "DCS" same as the

programmed in your transceiver. If codes of the received signal differs from those programmed in your transceiver, the "squelch" will not open and the received signal can be heard.

Note:
The use of "CTCSS" or "DCS" in a communication, does not guarantee complete confidentiality communication.

12.9. ANI

ANI(Automatic Number Identification)is also known as PTT ID because an ID is transmitted when the PTT button of the radio is pressed and/or released. This ID tells the dispatcher which field radio was keyed. Only could be set by PC software.

12.10. DTMFST (DTMF TONE OF TRANSMITTING CODE):

First you should set the PTT-ID as BOT/EOT/BOTH
"OFF"—Under transmitting mode, you can't hear the DTMF tone, while you press the key to transmit the code or code automatically transmitted.
"DT-ST"—Under transmitting mode, you can hear the DTMF tone, while you press the key to transmit the code.
"ANI-ST"under transmitting mode, you can hear the DTMF tone, while the code automatically transmitted.
"DT-ANI"—under transmitting mode, you can hear the DTMF tone, while you press the key to transmit the code or the code automatically transmitted.

12.11. SC-REV(SCAN RESUME METHOD):

This transceiver allows you to scan memory channels, all the bands or part of the bands.
When the transceiver detects a communication, the scan will stop automatically.

Notes:
"TO" (Time Operation):
Scanning will stop when it detects an active signal. The scanning will stop on each channel or active frequency for a predetermined time, after that time the scan will resume automatically.

"CO" (Carrier Operation):
The scanning will stop and remain in the frequency or channel, until the active signal disappears.
"SE"(Search Operation):
The scanning will stop and remain in the frequency or channel after it detects an active signal.

12.12. PTT-ID(PTT OR RELEASE PTT TO TRANSMIT THE SIGNAL CODE):

This feature allows you to know who call you.
"OFF"—Don't transmit the code while push the PTT button.
"BOT"-Transmit the code while push the PTT button.(the code only could be set by PC software.)
"EOT"-Transmit the code while release the PTT button.
"BOTH" -Transmit the code while push or release the PTT button.

12.13. BCL(BUSY CHANNEL LOCKOUT):

The BCLO feature prevents the radio' s transmitter from being activated if a signal strong enough to break through the "noise" squelch is present. On a frequency where stations using different CTCSS or DCS codes may be active, BCLO prevents you from disrupting their communications accidentally (because your radio may be muted by its own tone decoder).

12.14. SFT-D(DIRECTION OF FREQUENCY SHIFT):

The "OFFSET" is the difference or offset between the reception frequency and the frequency of transmission for access to amateur radio repeaters. Set the "OFFSET" according to the "OFFSET" amateur radio repeater through which want to communicate.

12.15. OFFSET(FREQUENCY SHIFT):

When communicating via a repeater, the direction of displacement of frequency should be timed to the displacement of the transmission frequency is higher or lower than the receiving frequency.
example:
If we want to make a communication through amateur radio repeater whose frequency input is 145,000 MHz and 145,600 MHz is output, we select the "OFFSET" of the previous section in 0600 and the direction of travel "SHIFT" programmed to [-], so the transceiver will always 145,600 MHz in frequency

and when you press【PTT】to transmit transceiver, the frequency will automatically move to 145,000 MHz

12.16. STE (TAIL TONE ELIMATION):

This function is used to activate or deactivate the transmission end of the transceiver. This final tone transmission only be used in communications between transceivers and not in communications through a repeater, which must be deactivated.

13. RESET(Restore To Default Setting)

The transceiver has a menu which resets VFO and ALL message. When you use RESET VFO, all parameter will be return to factory default. When you use RESET ALL, all transceivers and channel parameter will be return to factory default.

In standby, press【MENU】+【Number Key 40】,and then screen will display "RESET".
Press【MENU】enter, press【▲】or【▼】to select the desired work mode VFO or ALL.
Press【MENU】to confirm, then press【*/AB】to return to standby.

14. COPYING

The following step to copy Radio A to Radio B.

1. Connecting the two radio with special data cable.
2. Turn on the radio B on;
3. Press【MONI】at the meantime, turn on the radio A, the screen showing COPYING , When the copy finished,

   Radio B will power off auto and power on auto.
   Repeat the above 2 and 3 steps to clone more radio, if you cannot clone successful, please turn off both A and B radio, and make sure they were connected correctly with clone cable.

15. CTCSS TABLE:

No	Tone (Hz)	No	Tone (Hz)	No	Tone (Hz)	No	Tone (Hz)	No	Tone (Hz)
1	67.0	11	94.8	21	131.8	31	171.3	41	203.5
2	69.3	12	97.4	22	136.5	32	173.8	42	206.5
3	71.9	13	100.0	23	141.3	33	177.3	43	210.7
4	74.4	14	103.5	24	146.2	34	179.9	44	218.1
5	77.0	15	107.2	25	151.4	35	183.5	45	225.7
6	79.7	16	110.9	26	156.7	36	186.2	46	229.1
7	82.5	17	114.8	27	159.8	37	189.9	47	233.6
8	85.4	18	118.8	28	162.2	38	192.8	48	241.8
9	88.5	19	123.0	29	165.5	39	196.6	49	250.3
10	91.5	20	127.3	30	167.9	40	199.5	50	254.1

16. DCS TABLE:

No	Code	No	Code	No	Code	No	Code	No	Code
1	D023N	22	D131N	43	D251N	64	D371N	85	D532N
2	D025N	23	D132N	44	D252N	65	D411N	86	D546N
3	D026N	24	D134N	45	D255N	66	D412N	87	D565N
4	D031N	25	D143N	46	D261N	67	D413N	88	D606N
5	D032N	26	D145N	47	D263N	68	D423N	89	D612N

6	D036N	27	D152N	48	D265N	69	D431N	90	D624N
7	D043N	28	D155N	49	D266N	70	D432N	91	D627N
8	D047N	29	D156N	50	D271N	71	D445N	92	D631N
9	D051N	30	D162N	51	D274N	72	D446N	93	D632N
10	D053N	31	D165N	52	D306N	73	D452N	94	D645N
11	D054N	32	D172N	53	D311N	74	D454N	95	D654N
12	D065N	33	D174N	54	D315N	75	D455N	96	D662N
13	D071N	34	D205N	55	D325N	76	D462N	97	D664N
14	D072N	35	D212N	56	D331N	77	D464N	98	D703N
15	D073N	36	D223N	57	D332N	78	D465N	99	D712N
16	D074N	37	D225N	58	D343N	79	D466N	100	D723N
17	D114N	38	D226N	59	D346N	80	D503N	101	D731N
18	D115N	39	D243N	60	D351N	81	D506N	102	D732N
19	D116N	40	D244N	61	D356N	82	D516N	103	D734N
20	D122N	41	D245N	62	D364N	83	D523N	104	D743N
21	D125N	42	D246N	63	D365N	84	D526N	105	D754N

17. TECHNICAL SPECIFICATION:

17.1 RECEIVER

Receiver sensitivity	≤0.25uV (12dB SINAD)
Audio output	1W@10%
Audio distortion	＜10%
Signal to noise ratio	≥45dB
Adjacent channel	≥65 dB / ≥60 dB (W/N)
Intermediation	≥65 dB / ≥60 dB (W/N)
Clutter boycott	≥65dB
Consumption in reception	≤380mA

DUAL-BAND TRANSCEIVER

17.2 GENERAL

Frequency range	VHF:136-174MHz UHF:400-520MHz（Rx） VHF:144-148MHz UHF:420-450MHz（Tx）
Memory channels	Up to 128 channels
Frequency step	2.5kHz/5kHz/6.25kHz/10kHz/12.5kHz/25kHz.
Supply voltage	7.4V(Rechargeable Lithium-Ion)
Frequency stability	±2.5ppm
RF power	5W-1W
Operating temperature	－20~＋60℃
Antenna impedance	50Ω
Consumption in transmission	≤1.5A
Emission class	16KΦF3E / 11KΦF3E (W/N)
Maximum deviation	≤±5 kHz/≤±2.5 kHz (W/N)
spurious power	≤7.5uW
Spurious emissions	≤-65 dB/≤-60 dB
Signal to noise ratio	≥-45dB /≥-40dB (W/N)
QT/DQT Frequency offset	0.7±0.1KHz /0.4±0.1KHz (W/N)
Modulation sensitivity	8-12mV
Dimensions	61.5(W) x 123(H) x 36(D)mm
Weight:	227g (approximate)
Note: All specifications shown are subject to change without notice.	

18. TROUBLESHOOTING:

Problem	Possible cause / solution
The radio does not start.	▮ The battery is low, replace the battery with a charged battery or proceed to the battery. ▮ The battery is not installed correctly, remove the battery and reattach it.
The battery runs down quickly.	▮ The battery life has come to an end, replace the battery with a new one. ▮ The battery is fully charged, make sure the battery is made in full.
The receiving indicator LED lights but do not hear the speaker.	▮ Make sure the volume setting is too low. ▮ Make sure the undertones "CTCSS" or code "DCS" are the same as those programmed in the transceiver of the other members of your group.
When transmitting, the other members of his group do not receive the communication.	▮ Make sure the undertones "CTCSS" or code "DCS" programmed in your transceiver are the same as those programmed in the transceiver of the other members of your group. ▮ Your partner or you, are too far. ▮ You or your partner are in a bad area of RF signal propagation.

In "standby" mode, the transceiver transmits without pressing the "PTT".	Check the level adjustment function "VOX" is not set too sensitive.
Receive communications from other user groups while communicating with your group.	▮ Change frequency or channel. ▮ Change the undertones "CTCSS" or code "DCS" in your group.
Communication with other members of your group is poor or low quality.	You or your partner is too far away or in an area of poor radio signal propagation, such as inside a tunnel, inside an underground car park, in a mountainous area, including large metal structures, etc.

Once these checks, if you still have problems with the transceiver, check with your distributor, dealer or service center.

19. WARRANTY: (Better buy the radios from local dealer).

WARRANTY CERTIFICATE		
Brand:	Model No.:	Serial No.:
Name of purchaser:		
Address:		Seal and name of the dealer:
City:	Zip code:	
Province/State:	Tel No.:	
Date of purchase:		
WARNING: Warranty is valid provided it is complete and properly filled in legibly and clearly present the seal and name of the dealer and have attached the bill proof of purchase of equipment.		

The device described in this Certificate is guaranteed for a period of TWO YEARS from the date of sale to the final user. This Warranty Certificate is unique and not transferable and may not be reissued for new or original or copy. Substitution of product failure or any part thereof shall not involve extension of the guarantee.

The warranty covers the replacement and free replacement of all parts that are defective in materials and components used in manufacturing and / or assembly of the apparatus.
The warranty does not cover any faults caused by accident, improper installation and use, electric shock (eg storms), connect a power other than that specified, reverse polarity in the diet, or claims due to deterioration in the external appearance of normal use, nor the amount or condition of the accessories.

Checking the accessories is the responsibility of the purchaser at the time of purchasing the device. The warranty does not cover rechargeable batteries even if they are part of the equipment purchased as they are considered consumables, the impairment must be reported within a period of fifteen days from the date of purchase.

The warranty is void on the following assumptions:

1. Devices that have been manipulated by another or by anyone other than authorized service provider.
2. Equipment and accessories in which the serial number has been altered, deleted or filed unreadable.
3. Use of the product than as intended.

To make use of the guarantee is necessary to give the dealer or any of the Authorized Service the defective device with its accessories and the following documentation:

1. Warranty Certificate duly completed and sealed.

2. Original invoice which clearly identifies the device and the date of purchase.

3. Description of the faults.

The warranty terms contained in this Certificate of Guarantee do not exclude, modify or restrict the statutory rights of the buyer by virtue of the laws in force at the time of purchase, but are added to them.

NOTE: This equipment has been tested and found to comply with the limits for a Class B digital device, pursuant to part 15 of the FCC Rules. These limits are designed to provide reasonable protection against harmful interference in a residential installation. This equipment generates uses and can radiate radio frequency energy and, if not installed and used in accordance with the instructions, may cause harmful interference to radio communications. However, there is no guarantee that interference will not occur in a particular installation. If this equipment does cause harmful interference to radio or television reception, which can be determined by turning the equipment off and on, the user is encouraged to try to correct the interference by one or more of the following measures:

- Reorient or relocate the receiving antenna.
- Increase the separation between the equipment and receiver.
-Connect the equipment into an outlet on a circuit different from that to which the receiver is connected.
-Consult the dealer or an experienced radio/TV technician for help

Changes or modifications not expressly approved by the party responsible for compliance could void the user's authority to operate the equipment. This device complies with Part 15 of the FCC Rules. Operation is subject to the following two conditions:
(1) this device may not cause harmful interference, and
(2) this device must accept any interference received, including interference that may cause undesired operation.