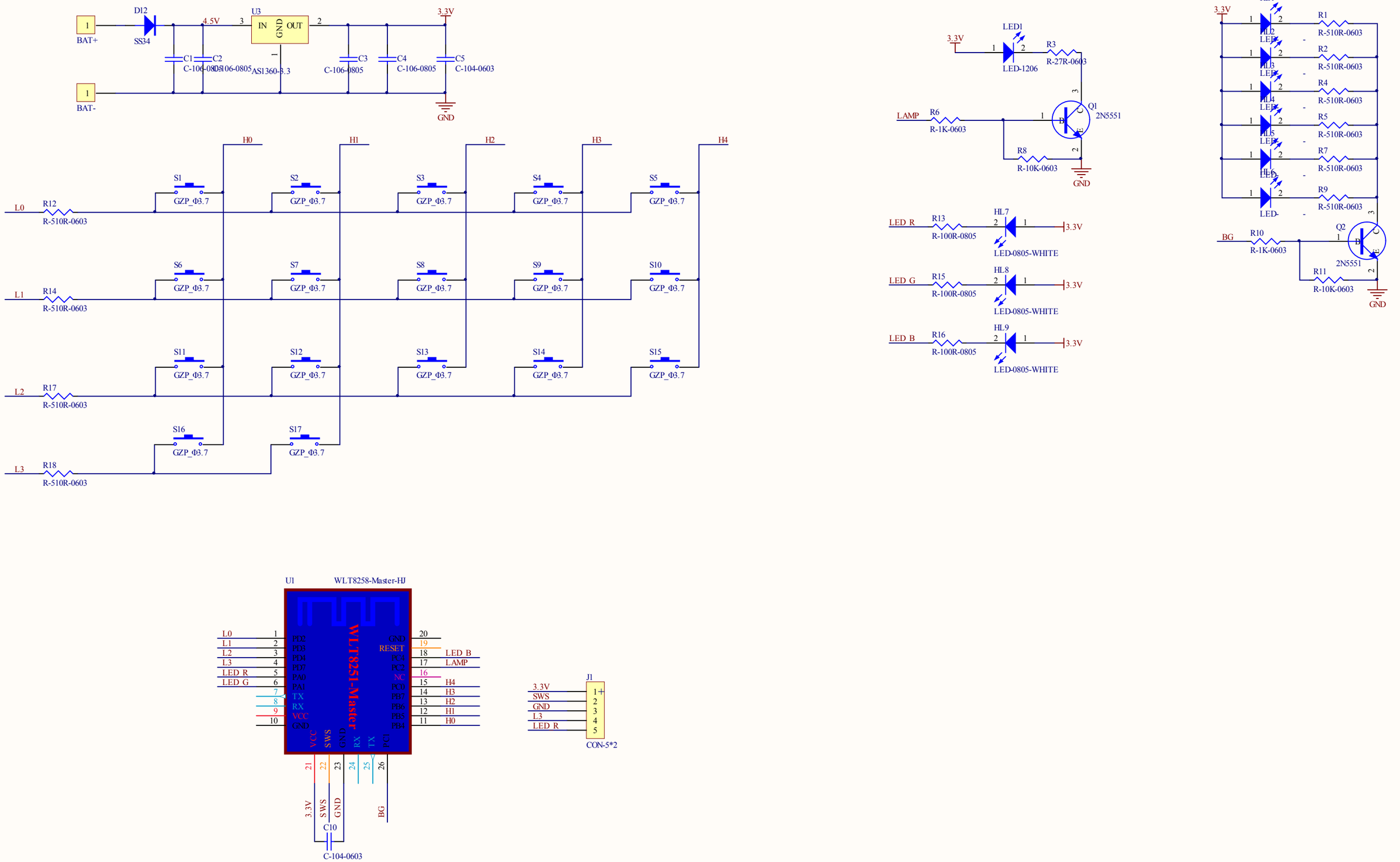
BAT+
BAT-
D12
SS34
4.5V
U3
IN
GND
OUT
AS1360-3.3
3.3V
C1
C-106-0805
C2
C-106-0805
C3
C-106-0805
C4
C-106-0805
C5
C-104-0603
GND
H0
H1
H2
H3
H4
L0
L1
L2
L3
R12
R14
R17
R18
R-510R-0603
S1
S2
S3
S4
S5
S6
S7
S8
S9
S10
S11
S12
S13
S14
S15
S16
S17
GZP_Ф3.7
LED1
LED-1206
R3
R-27R-0603
LAMP
R6
R-1K-0603
Q1
2N5551
R8
R-10K-0603
LED R
R13
R-100R-0805
HL7
LED-0805-WHITE
LED G
R15
HL8
LED B
R16
HL9
HL1
HL2
HL3
HL4
HL5
HL6
LED-
R1
R2
R4
R5
R7
R9
BG
R10
Q2
R11
U1
WLT8258-Master-HJ
WLT8251-Master
PD2
PD3
PD4
PD7
PA0
PA1
TX
RX
VCC
GND
RESET
PC4
PC2
NC
PC0
PB7
PB6
PB5
PB4
PC1
LED B
LAMP
H4
H3
H2
H1
H0
C10
C-104-0603
J1
CON-5*2