TEST REPORT

Module Product Name	:	Single mode Bluetooth(5.0) Module
Module Model Number	:	HJ8258C
Host Product Name	:	Control box
Host Model Number	:	C26M-B-A131-1R-310-LH1-01
FCC ID	:	2AJJGHJ8258C

Prepared for	:	Qingdao Richmat Intelligence Technology inc
Address	:	NO.78 Kongquehe 4th Rd Qingdao Clothing Industry Park,Jimo, Qingdao, China

Prepared by	:	EMTEK (NINGBO) CO., LTD.
Address	:	No. 8, Building 8, Lane 216, Qingyi Road, Ningbo High-Tech Zone, Ningbo, Zhejiang, China Tel: +86-574-27907998 Fax: +86-574-27721538

Report Number	:	ENB2604200247W00401R
Date(s) of Tests	:	April 20, 2026 to June 10, 2026
Date of issue	:	June 10, 2026

Table of Contents

1 TEST RESULT CERTIFICATION 3

2 EUT TECHNICAL DESCRIPTION 5

3 SUMMARY OF TEST RESULT 6

4 TEST METHODOLOGY 7

4.1 GENERAL DESCRIPTION OF APPLIED STANDARDS 7
4.2 MEASUREMENT EQUIPMENT USED 7
4.3 DESCRIPTION OF TEST MODES 8

5 FACILITIES AND ACCREDITATIONS 9

5.1 FACILITIES 9
5.2 EQUIPMENT 9
5.3 LABORATORY ACCREDITATIONS AND LISTINGS 10

6 TEST SYSTEM UNCERTAINTY 11

7 SETUP OF EQUIPMENT UNDER TEST 12

7.1 RADIO FREQUENCY TEST SETUP 1 12
7.2 RADIO FREQUENCY TEST SETUP 2 12
7.3 CONDUCTED EMISSION TEST SETUP 16
7.4 BLOCK DIAGRAM CONFIGURATION OF TEST SYSTEM 17
7.5 SUPPORT EQUIPMENT 17

8 TEST REQUIREMENTS 18

8.1 DTS 6DB BANDWIDTH 18
8.2 DTS 99%BANDWIDTH 19
8.3 MAXIMUM PEAK CONDUCTED OUTPUT POWER 20
8.4 MAXIMUM POWER SPECTRAL DENSITY 21
8.5 UNWANTED EMISSIONS IN NON-RESTRICTED FREQUENCY BANDS 22
8.6 RADIATED SPURIOUS EMISSION 25
8.7 CONDUCTED EMISSIONS TEST 43
8.8 ANTENNA APPLICATION 44

1 TEST RESULT CERTIFICATION

Applicant	:	Qingdao Richmat Intelligence Technology inc
Address	:	NO.78 Kongquehe 4th Rd Qingdao Clothing Industry Park,Jimo, Qingdao, China
Manufacturer	:	Qingdao Richmat Intelligence Technology inc
Address	:	NO.78 Kongquehe 4th Rd Qingdao Clothing Industry Park,Jimo, Qingdao, China
EUT	:	Control box
Model Name	:	C26M-B-A131-1R-310-LH1-01
Trademark	:	N/A

Measurement Procedure Used:

APPLICABLE STANDARDS	
STANDARD	**TEST RESULT**
FCC 47 CFR Part 2, Subpart J FCC 47 CFR Part 15, Subpart C	**PASS**

The above equipment was tested by EMTEK(NINGBO) CO., LTD. The test data, data evaluation, test procedures, and equipment configurations shown in this report were made in accordance with the procedures given in ANSI C63.10 (2020) and the energy emitted by the sample EUT tested as described in this report is in compliance with the requirements of FCC Rules Part 2, Part 15.247.

The test results of this report relate only to the tested sample identified in this report.

Date of Test :	April 20, 2026 to June 10, 2026
Prepared by :	WK Luo
	WK Luo /Engineer
Reviewer :	June Gao
	June Gao /Supervisor
Approved & Authorized Signer :	Tony Wei
	Tony Wei /Manager

Modified History

Version	Report No.	Revision Date	Summary
/	ENB2604200247W00401R	/	Original Report

Note: The wireless module model applied for this certification is HJ8258C. This model module has already passed the certification and its FCC ID is 2AJJGHJ8258C. This application has conducted verification tests on the reported terminal devices.

2 EUT TECHNICAL DESCRIPTION

Characteristics	Description
Module Product Name:	Single mode Bluetooth(5.0) Module
Module Model Number:	HJ8258C
Host Product:	Control box
Host Model Number:	C26M-X-XXXX-XX-XXX-XXX-XX, C26M-B-A131-1R-310-LH1-01 The "X" in the series model represents different meanings respectively, but the schematic diagram, PCB layout, appearance color, etc. are all the same. The specific differences can be found on the next page - Model Specification Code. The entire machine covered by this certification is based on the module ID and has undergone tests related to radiation emission and radiation emission interference for the entire machine. The selected test model for the entire machine is C26M-B-A131-1R-310-LH1-01.
Test Sample S/N:	ENB2604200247W004-1-1
Data Rate :	1Mbps
Modulation:	GFSK
Operating Frequency Range:	2402-2480MHz
Number of Channels:	40 Channels
Antenna Type:	PCB Antenna
Antenna Gain:	3.25 dBi
Test Voltage:	DC 29V
Temperature Range:	-40 ℃ ~ +85 ℃

Note: for more details, please refer to the User's manual of the EUT.

3 SUMMARY OF TEST RESULT

FCC PartClause	Test Parameter	Verdict	Remark
15.247(a)(2)	EmissionBandwidth	PASS	
15.247(b)(3)	Maximum Peak Conducted Output Power	PASS	
15.247(e)	Maximum Power Spectral Density Level	PASS	
15.247(d)	Unwanted Emission Into Non-Restricted Frequency Bands	PASS	
15.247(d)	Unwanted Emission Into Restricted Frequency Bands (conducted)	PASS	
15.247(d) 15.209 15.205	Radiated Spurious Emission	PASS	
15.207	Conducted EmissionTest	N/A	
15.203 15.247(b)	Antenna Application	PASS	
NOTE1:N/A (Not Applicable) NOTE2:According to FCC OET KDB 558074, the report use radiated measurements in the restricted frequency bands. In addition, the radiated test is also performed to ensure the emissions emanating from the device cabinet also comply with the applicable limits.			

RELATED SUBMITTAL(S) / GRANT(S):
This submittal(s) (test report) is intended for **FCC ID: 2AJJGHJ8258C** filing to comply with Section 15.247 of the FCC Part 15, Subpart C Rules.

4 TEST METHODOLOGY

4.1 GENERAL DESCRIPTION OF APPLIED STANDARDS

According to its specifications, the EUT must comply with the requirements of the following standards:

FCC 47 CFR Part 2, Subpart J

FCC 47 CFR Part 15, Subpart C

FCC KDB 558074 D01 15.247 Meas Guidance v05r02

4.2 MEASUREMENT EQUIPMENT USED

For Spurious Emissions Test

Equ. No.	Equipment	Manufacturer	Model No.	Serial No.	Last Cal.	Cal. Interval
ENE-185	EMI Test Receiver	R&S	ESR7	102480	March 02, 2026	1 Year
ENE-188	Low Frequency Field Antenna	Schwarzbeck	FMZB 1513-60	00026	June 26, 2025	3 Year
ENE-190	Antenna Multiple	Schwarzbeck	VULB 9163	01499	March 09, 2025	3 Year
ENE-195	Pre-Amplifier	JS Denki	PA09K03-40	JSPA21019	March 02, 2026	1 Year
ENE-204	Low Frequency Notch Filter RF Switching	JS Denki	JSDSW-F	JSDSW2211 D02	March 02, 2026	1 Year
ENE-251	6dB Attenuator	Mini-Circuits	UNAT-6+	11542	June 18, 2025	1 Year
ENE-144	3-Meter Anechoic Chamber2#	SKET	9*6*6m	/	June 21, 2025	3 Year
ENE-171	EXA Signal Analyzer	KEYSIGHT	N9010B	MY60242467	Oct. 24, 2025	1 Year
ENE-191	Horn Antenna	Schwarzbeck	BBHA 9120 D	02588	March 09, 2025	3 Year
ENE-198	Pre-Amplifier	JS Denki	PA0118-50	JSPA21022	March 02, 2026	1 Year
ENE-206	High Frequency Notch FilterRf Switching	JS Denki	JSDSW-F	202083582	March 02, 2026	1 Year

4.3 DESCRIPTION OF TEST MODES

The EUT has been tested under its typical operating condition.
The EUT configuration for testing is installed on RF field strength measurement to meet the Commissions requirement and operating in a manner which intends to maximize its emission characteristics in a continuous normal application.

The Transmitter was operated in the normal operating mode. The TX frequency was fixed which was for the purpose of the measurements.

Test of channel included the lowest and middle and highest frequency to perform the test, then record on this report.

Those data rates (GFSK) were used for all test.

Pre-defined engineering program for regulatory testing used to control the EUT for staying in continuous transmitting and receiving mode is programmed.

Frequency and Channel list for GFSK:

Channel	Frequency (MHz)	Channel	Frequency (MHz)	Channel	Frequency (MHz)
0	2402	19	2440	…	…
1	2404	20	2442	37	2476
2	2406	21	2444	38	2478
…	…	…	…	39	2480
Note: fc=2402MHz+k×1MHz k=1 to 39					

Test Frequency and channel for GFSK:

Lowest Frequency		Middle Frequency		Highest Frequency	
Channel	Frequency (MHz)	Channel	Frequency (MHz)	Channel	Frequency (MHz)
0	2402	19	2440	39	2480

5 FACILITIES AND ACCREDITATIONS

5.1 FACILITIES

All measurement facilities used to collect the measurement data are located at:
EMTEK (NINGBO) CO., LTD.
No. 8, Building 8, Lane 216, Qingyi Road, Ningbo High-Tech Zone, Ningbo, Zhejiang, China
The sites are constructed in conformance with the requirements of ANSI C63.7, ANSI C63.4 and CISPR Publication 22.

5.2 EQUIPMENT

Radiated emissions are measured with one or more of the following types of linearly polarized antennas: tuned dipole, biconical, log periodic, bi-log, and/or ridged waveguide, horn. Spectrum analyzers with preselectors and quasi-peak detectors are used to perform radiated measurements.

Conducted emissions are measured with Line Impedance Stabilization Networks and EMI Test Receivers.

Calibrated wideband preamplifiers, coaxial cables, and coaxial attenuators are also used for making measurements.

All receiving equipment conforms to CISPR Publication 16-1, “Radio Interference Measuring Apparatus and Measurement Methods.”

5.3 LABORATORY ACCREDITATIONS AND LISTINGS

Site Description

EMC Lab. : **Accredited by CNAS**

The Certificate Registration Number is L6666.

The Laboratory has been assessed and proved to be in compliance with CNAS-CL01:2018 (identical to ISO/IEC 17025:2017)

Designation by FCC

Designation Number: CN1354

Test Firm Registration Number: 427606

Accredited by A2LA

The Certificate Number is 4321.03.

Accredited by ISED

The Conformity Assessment Body Identifier is CN0114

Name of Firm : EMTEK (NINGBO) CO., LTD.

Site Location : No. 8, Building 8, Lane 216, Qingyi Road, Ningbo High-Tech Zone, Ningbo, Zhejiang, China

6 TEST SYSTEM UNCERTAINTY

The following measurement uncertainty levels have been estimated for tests performed on the apparatus:

Test Parameter	Measurement Uncertainty
Frequency error	±20Hz
Occupied Bandwidth	±0.5KHz
Transmitter output power	±0.6dB
Conducted spurious emissions	±3.2dB
Radiated spurious emissions	±4.5dB
Temperature	±1.2℃
Humidity	±3%
DC voltages	±0.25V
Time	±1%

Measurement Uncertainty for a level of Confidence of 95%

7 SETUP OF EQUIPMENT UNDER TEST

7.1 RADIO FREQUENCY TEST SETUP 1

The Bluetoothcomponent's antenna ports(s) of the EUT are connected to the measurement instrument per an appropriate attenuator. The EUT is controlled by PC/software to emit the specified signals for the purpose of measurements.

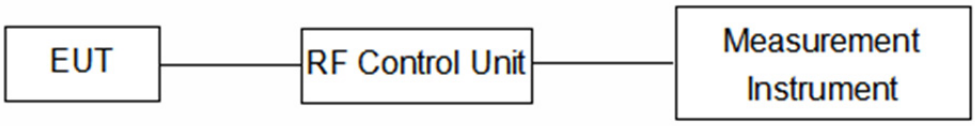

7.2 RADIO FREQUENCY TEST SETUP 2

The test site semi-anechoic chamber has met the requirement of NSA tolerance 4 dB according to the standards: ANSI C63.10. The test distance is 3m.The setup is according to the requirements in Section 13.1.4.1 of ANSI C63.10-2020 and CAN/CSA-CEI/IEC CISPR 22.
The maximal emission value is acquired by adjusting the antenna height, polarisation and turntable azimuth. Normally, the height range of antenna is 1 m to 4 m, the azimuth range of turntable is 0° to 360°, and the receive antenna has two polarizations Vertical (V) and Horizontal (H).

Below 30MHz：
The EUT is placed on a turntable 0.8 meters above the ground in the chamber, 3 meter away from the antenna (loop antenna). The Antenna should be positioned with its plane vertical at the specified distance from the EUT and rotated about its vertical axis for maximum response at each azimuth about the EUT. The center of the loop shall be 1 m above the ground. For certain applications, the loop antenna plane may also need to be positioned horizontally at the specified distance from the EUT.

Above 30MHz：
The EUT is placed on a turntable 0.8 meters above the ground in the chamber, 3 meter away from the antenna. The maximal emission value is acquired by adjusting the antenna height, polarisation and turntable azimuth. Normally, the height range of antenna is 1 m to 4 m, the azimuth range of turntable is 0° to 360°, and the receive antenna has two polarizations Vertical (V) and Horizontal (H).

Above 1GHz:
The EUT is placed on a turntable 1.5 meters above the ground in the chamber, 3 meter away from the antenna. The maximal emission value is acquired by adjusting the antenna height, polarisation and turntable azimuth. Normally, the height range of antenna is 1 m to 4 m, the azimuth range of turntable is 0° to 360°, and the receive antenna has two polarizations Vertical (V) and Horizontal (H).

Measurements shall be taken, using the following steps, at a test site that has been validated using the procedures of ANSI C63.4 or the latest CISPR 16-1-4 for measurements above 1 GHz, so as to simulate a near free-space environment (see RSS-Gen for applicable versions of ANSI and CISPR standards).
(1) Line the ground plane with absorbers between the transmitter and the receive antenna to minimize reflections. The absorbers used should have a minimum-rated attenuation of 20 dB

through the measurement frequency range of interest. The absorbers shall be positioned to replicate the layout used when compliance with the applicable acceptability criterion was achieved, as set forth in the aforementioned standards on site validation.

(2) Set the height of the receive antenna to 1.5 m. The receive antenna must be one that was designed and fabricated to operate over the entire frequency range of interest, for example, an appropriate standard gain horn.

(3) The distance between the receive antenna and the radiating source shall be sufficient in order to ensure far-field conditions.

(4) Mount the transmitter at a height of 1.5 m.

(5) Configure the device under test (DUT) to produce the maximum power spectral density as measured while assessing compliance with Section 6.2.2 (i.e. channel frequency, modulation type and data rate). If the DUT is equipped with a detachable antenna and the antenna is intended for remote installation (i.e. tower-mounted), the DUT may be substituted with a suitable signal generator. The level and frequency settings on the generator shall be set so as to reproduce the maximum power spectral density, measured within a 1 MHz bandwidth, obtained while assessing compliance to Section 6.2.2.

(6) Position the transmitter or the radiating antenna so that elevation pattern measurements can be taken.

(7) Find the 0° reference point in the horizontal plane.

(8) Care should be taken when positioning the receive antenna to avoid cross-polarization. Antennas of known mounting polarization should be assessed with the receive antenna oriented in the same polarity. If the polarization of the transmit antenna is unknown or the transmit antenna can be mounted in either polarization, e.i.r.p. measurements should be performed to find which mounting polarity provides the highest e.i.r.p. value. Testing shall be carried out with the receive antenna and the DUT mounted in each polarity.

(9) The emission shall be centred on the display of the spectrum analyzer with the following settings:

i. If the power spectral density of the DUT was assessed with a peak detector and the antenna cannot be detached from the DUT, the spectrum analyzer shall be set to a peak detector with a resolution bandwidth and video bandwidth of 1 MHz.

ii. If the power spectral density of the DUT was assessed using a sample detector with power averaging and the antenna cannot be detached from the DUT, the spectrum analyzer shall be set to a sample detector, configured to produce 100 power averages and set with a resolution bandwidth, as well as a video bandwidth of 1 MHz.

iii. If the antenna can be detached from the DUT, a continuous wave (CW) signal equal to that of the power spectral density measurement may be used, the spectrum analyzer shall be set to peak detector with a resolution bandwidth and video bandwidth of 1 MHz.

(10) Rotate the turntable 360° recording the field strength at each step. Throughout the main beam of the antenna, the step size shall be kept to a maximum of 1°.

Once outside the main beam of the antenna, the maximum step size shall be as follows, when compared to the requirements of Section 6.2.2:

i. Between 0° and 8°, maximum step size of 2°;

ii. Between 8° and 40°, maximum step size of 4°;

iii. Between 40° and 45°, maximum step size of 1°;

iv. Between 45° and 90°, maximum step size of 5°.

Once the mask reaches 90°, the mask will be inverted and the step size will follow in the same

manner as above.

For the purpose of this procedure, the main beam of the antenna is defined as the 3 dB beamwidth.

(11) Convert the measured field strength values in terms of e.i.r.p. density (dBW/1 MHz) using the following equation:

$$\text{e.i.r.p density(dBW/MHz)}=10\log((E*r)^2/30)$$

E = field strength in V/m

r = measurement distance in metres

(12) Plot the results against the emission mask with reference to the horizontal plane.

(13) Using the plot, the 0° can be rotated to determine the worst-case installation tilt angle.

(14) Testing shall be performed using the highest gain antenna for every antenna type, if applicable.

(15) Antenna type(s), antenna model number(s), and worst-case tilt angle(s) necessary to remain compliant with the elevation mask requirement set forth in Section 6.2.2(3) of RSS-247 shall be clearly indicated in the user manual.

The following figure is an example of a polar elevation mask measured using the Method 1 reference to dBμV/m at 3 m.

(a) Radiated Emission Test Set-Up, Frequency Below 30MHz

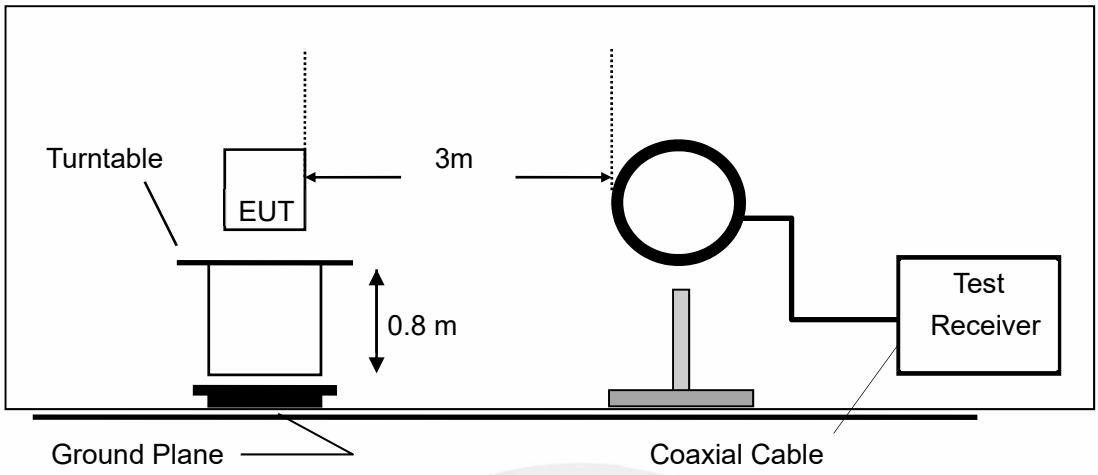

(b) Radiated Emission Test Set-Up, Frequency Below 1000MHz

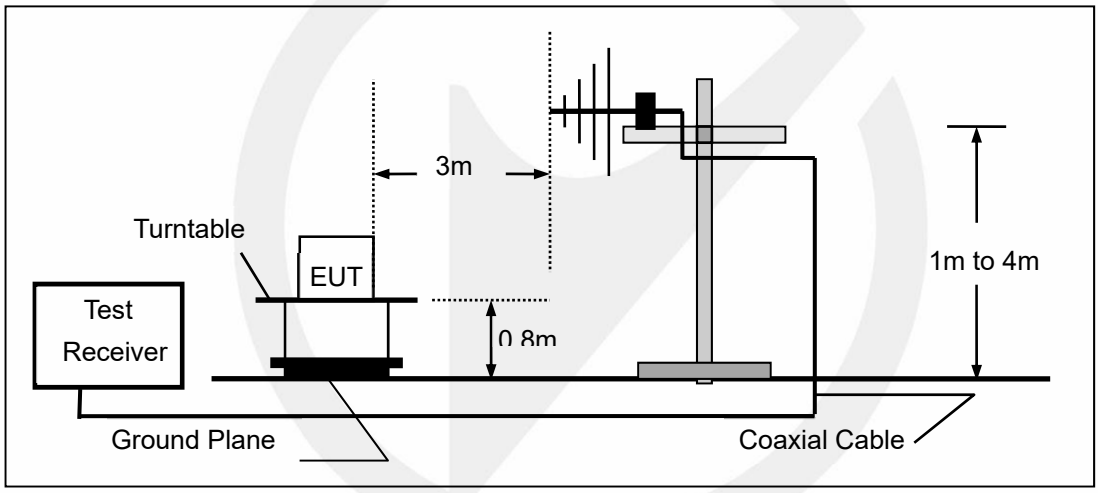

(c) Radiated Emission Test Set-Up, Frequency above 1000MHz

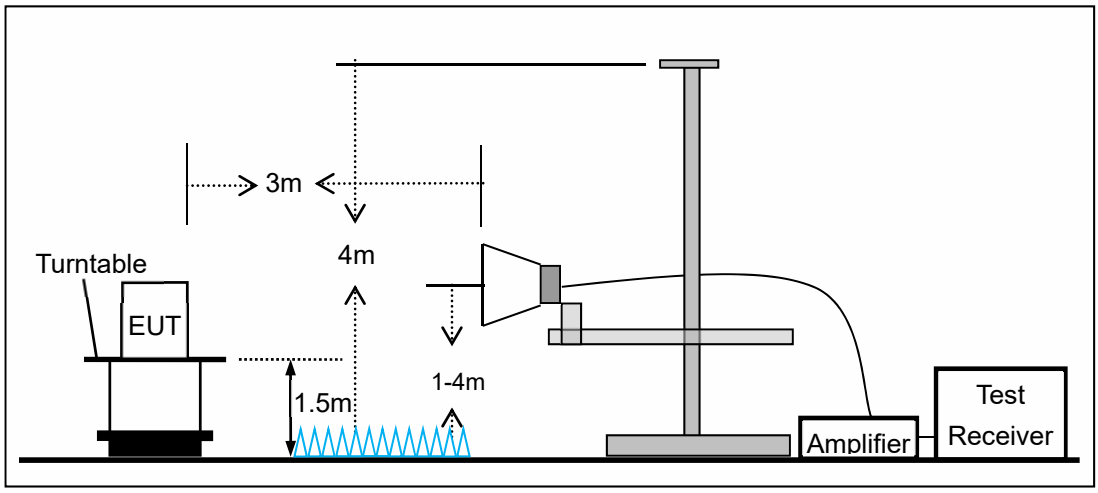

7.3 CONDUCTED EMISSION TEST SETUP

The mains cable of the EUT (maybe per AC/DC Adapter) must be connected to LISN. The LISN shall be placed 0.8 m from the boundary of EUT and bonded to a ground reference plane for LISN mounted on top of the ground reference plane. This distance is between the closest points of the LISN and the EUT. All other units of the EUT and associated equipment shall be at least 0.8m from the LISN.

Ground connections, where required for safety purposes, shall be connected to the reference ground point of the LISN and, where not otherwise provided or specified by the manufacturer, shall be of same length as the mains cable and run parallel to the mains connection at a separation distance of not more than 0.8 m.

According to the requirements in Section 13.1.4.1 of ANSI C63.10-2020 Conducted emissions from the EUT measured in the frequency range between 0.15 MHz and 30 MHz using CISPR Quasi-Peak and average detector mode.

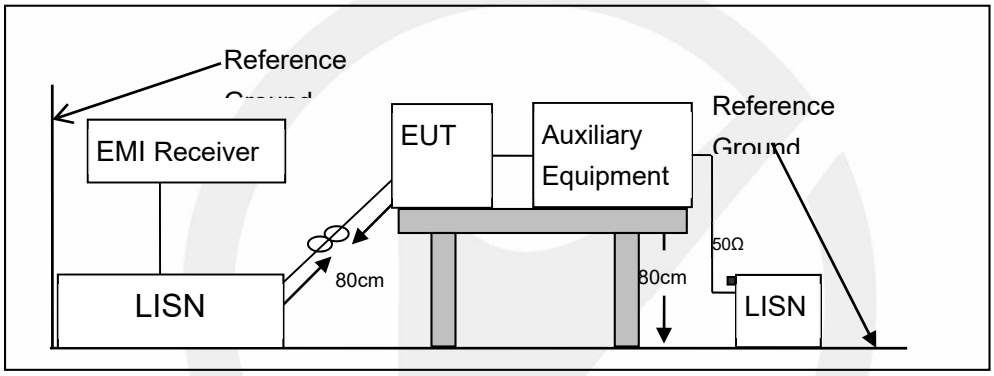

7.4 BLOCK DIAGRAM CONFIGURATION OF TEST SYSTEM

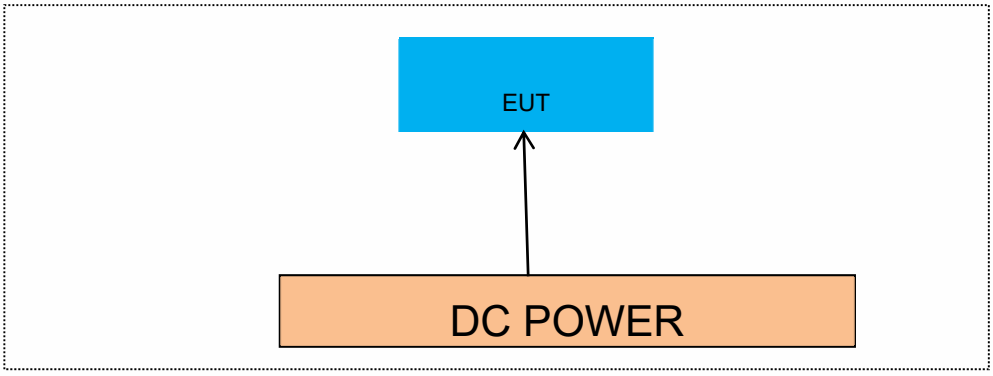

7.5 SUPPORT EQUIPMENT

EUT Cable List and Details			
Cable Description	Length (m)	Shielded/Unshielded	With / Without Ferrite
/	/	/	/

Auxiliary Cable List and Details			
Cable Description	Length (m)	Shielded/Unshielded	With / Without Ferrite
/	/	/	/

Auxiliary Equipment List and Details			
Description	Manufacturer	Model	Serial Number
/	/	/	/

Notes:

1. *All the equipment/cables were placed in the worst-case configuration to maximize the emission during the test.*
2. *Grounding was established in accordance with the manufacturer's requirements and conditions for the intended use.*

8 TEST REQUIREMENTS

8.1 DTS 6DB BANDWIDTH

8.1.1 Applicable Standard

According to FCC Part 15.247(a)(2) and KDB 558074 D01 15.247 Meas Guidance v05r02

8.1.2 Conformance Limit

The minimum -6 dB bandwidth shall be at least 500 kHz.

8.1.3 Test Configuration

Test according to clause 7.1 radio frequency test setup 1

8.1.4 Test Procedure

The EUT was operating in Bluetooth mode and controlled its channel. Printed out the test result from the spectrum by hard copy function.
The RF output of EUT was connected to the spectrum analyzer by RF cable and attenuator. The path loss was compensated to the results for each measurement.
Set to the maximum power setting and enable the EUT transmit continuously
Set RBW = 100 kHz.
Set the video bandwidth (VBW) =300kHz.
Set Span=2 times OBW
Set Detector = Peak.
Set Trace mode = max hold.
Set Sweep = auto couple.
Allow the trace to stabilize.
Measure the maximum width of the emission that is constrained by the frequencies associated with the two outermost amplitude points (upper and lower frequencies) that are attenuated by 6 dB relative to the maximum level measured in the fundamental emission.
Measure and record the results in the test report.

Test Results

Temperature:	26˚C
Relative Humidity:	48%
ATM Pressure:	1011 mbar

Note: N/A

For the relevant data, please refer to report ENB2604200247W00101R.

8.2 DTS 99%BANDWIDTH

8.2.1 Applicable Standard

According to KDB 558074 D01 DTS Meas Guidance v05r02

8.2.2 Test Configuration

Test according to clause 7.1 radio frequency test setup 1

8.2.3 Test Procedure

The EUT was operating inBluetooth mode and controlled its channel. Printed out the test result from the spectrum by hard copy function.
The RF output of EUT was connected to the spectrum analyzer by RF cable and attenuator. The path loss was compensated to the results for each measurement.
Set to the maximum power setting and enable the EUT transmit continuously
Set RBW = 1%-5% OBW(43KHz).
Set the video bandwidth (VBW) =130kHz.
Set Span=4MHz
Set Detector = Peak.
Set Trace mode = max hold.
Set Sweep = auto couple.
Allow the trace to stabilize.
Use the 99 % power bandwidth function of the instrument
Measure the maximum width of the emission.
Measure and record the results in the test report.

8.2.4 Test Results

Temperature:	26˚C
Relative Humidity:	48%
ATM Pressure:	1011 mbar

For the relevant data, please refer to report ENB2604200247W00101R.

8.3 MAXIMUM PEAK CONDUCTED OUTPUT POWER

8.3.1 Applicable Standard

According to FCC Part 15.247(b)(3) and KDB 558074 D01 15.247 Meas Guidance v05r02

8.3.2 Conformance Limit

The maximum peak conducted output power of the intentional radiator for systems using digital modulation in the 2400 - 2483.5 MHz bands shall not exceed: 1 Watt (30dBm).

8.3.3 Test Configuration

Test according to clause 7.1 radio frequency test setup 1

8.3.4 Test Procedure

As an alternative to a peak power measurement, compliance with the one Watt limit can be based on a measurement of the maximum conducted output power. For smart system, Maximum Conducted Output Power is defined as the total transmit power delivered to all antennas and antenna elements averaged across all symbols in the signaling alphabet when the transmitter is operating at its maximum power control level. Power must be summed across all antennas and antenna elements. If multiple modes of operation are possible (e.g., alternative modulation methods), the maximum conducted output power is the highest total transmit power occurring in any mode.
Set the RBW ≧DTS bandwidth(about 2MHz).
Set VBW =3*RBW(about 6MHz)
Set the span ≧3*RBW
Set Sweep time = auto couple.
Set Detector = peak.
Set Trace mode = max hold.
Allow trace to fully stabilize. Use peak marker function to determine the peak amplitude level.

Conducted output power limit specified in paragraph (b) of this section is based on the use of antennas with directional gains that do not exceed 6 dBi. If transmitting antennas of directional gain greater than 6 dBi are used, the conducted output power from the intentional radiator shall be reduced below the stated values in paragraphs (b)(3) of this section, as appropriate, by the amount in dB that the directional gain of the antenna exceeds 6 dBi.

8.3.5 Test Results

Temperature:	26˚C
Relative Humidity:	48%
ATM Pressure:	1011 mbar

For the relevant data, please refer to report ENB2604200247W00101R.

8.4 MAXIMUM POWER SPECTRAL DENSITY

8.4.1 Applicable Standard

According to FCC Part 15.247(e) and KDB 558074 D01 15.247 Meas Guidance v05r02

8.4.2 Conformance Limit

The transmitter power spectral density conducted from the transmitter to the antenna shall not be greater than 8 dBm in any 3 kHz band during any time interval of continuous transmission.

8.4.3 Test Configuration

Test according to clause 7.1 radio frequency test setup 1

8.4.4 Test Procedure

This procedure shall be used if maximum peak conducted output power was used to demonstrate compliance
The transmitter output (antenna port) was connected to the spectrum analyzer
Set analyzer center frequency to DTS channel center frequency.
Set the span to 1.5 times the DTS bandwidth.
Set the RBW to: 3 kHz
Set the VBW to:10 kHz.
Set Detector = peak.
Set Sweep time = auto couple.
Set Trace mode = max hold.
Allow trace to fully stabilize.
Use the peak marker function to determine the maximum amplitude level within the RBW.

8.4.5 Test Results

Temperature:	26˚C
Relative Humidity:	48%
ATM Pressure:	1011 mbar

For the relevant data, please refer to report ENB2604200247W00101R.

8.5 UNWANTED EMISSIONS IN NON-RESTRICTED FREQUENCY BANDS

8.5.1 Applicable Standard

According to FCC Part 15.247(d) and KDB 558074 D01 15.247 Meas Guidance v05r02

8.5.2 Conformance Limit

In any 100 kHz bandwidth outside the frequency band in which the spread spectrum or digitally modulated intentional radiator is operating, the radio frequency power that is produced by the intentional radiator shall be at least 20 dB below that in the 100 kHz bandwidth within the band that contains the highest level of the desired power, based on either an RF conducted or a radiated measurement, provided the transmitter demonstrates compliance with the peak conducted power limits. If the transmitter complies with the conducted power limits based on the use of RMS averaging over a time interval, as permitted under paragraph (b)(3) of this section, the attenuation required under this paragraph shall be 30 dB instead of 20 dB.

8.5.3 Test Configuration

Test according to clause 7.1 radio frequency test setup 1

8.5.4 Test Procedure

The transmitter output (antenna port) was connected to the spectrum analyzer

- **Reference level measurement**

Establish a reference level by using the following procedure:
Set instrument center frequency to DTS channel center frequency.
Set the span to = 1.5 times the DTS bandwidth.
Set the RBW = 100 kHz.
Set the VBW ≥ 3 x RBW.
Set Detector = peak.
Set Sweep time = auto couple.
Set Trace mode = max hold.
Allow trace to fully stabilize.
Use the peak marker function to determine the maximum PSD level.
Note that the channel found to contain the maximum PSD level can be used to establish the reference level.

- **Band-edge measurement**

Use the following spectrum analyzer settings:
Span = wide enough to capture the peak level of the emission operating on the channel closest to the band-edge, as well as any modulation products which fall outside of the authorized band of operation
Set RBW ≥ 1% of the span=100kHz Set VBW ≥3 x RBW
Set Sweep = autoSet Detector function = peakSet Trace = max hold
Allow the trace to stabilize. Set the marker on the emission at the bandedge, or on the highest modulation product outside of the band, if this level is greater than that at the bandedge. Enable the marker-delta function, then use the marker-to-peak function to move the marker to the peak of the in-band emission. The marker-delta value now displayed must comply with the limit specified in this Section.

■ **Emission level measurement**

Set the center frequency and span to encompass frequency range to be measured.
Set the RBW = 100 kHz.
Set the VBW =300 kHz.
Set Detector = peak
Sweep time = auto couple.
Trace mode = max hold.
Allow trace to fully stabilize.
Use the peak marker function to determine the maximum amplitude level.
Ensure that the amplitude of all unwanted emissions outside of the authorized frequency band (excluding restricted frequency bands) are attenuated by at least the minimum requirements . Report the three highest emissions relative to the limit.

8.5.5 Test Results

Temperature:	26 ˚C
Relative Humidity:	48%
ATM Pressure:	1011 mbar

Note: N/A

■ **Reference level measurement**

For the relevant data, please refer to report ENB2604200247W00101R.

■ **Band-edge measurement**

For the relevant data, please refer to report ENB2604200247W00101R.

■ **Emission level measurement**

For the relevant data, please refer to report ENB2604200247W00101R.

■ **Reference level measurement**

For the relevant data, please refer to report ENB2604200247W00101R.

■ **Band-edge measurement**

For the relevant data, please refer to report ENB2604200247W00101R.

■ **Emission level measurement**

For the relevant data, please refer to report ENB2604200247W00101R.

8.6 RADIATED SPURIOUS EMISSION

8.6.1 Applicable Standard

According to FCC Part 15.247(d),15.205, 15.209 and KDB 558074 D01 15.247 Meas Guidancev05r02

8.6.2 Conformance Limit

According to FCC Part 15.247(d): radiated emissions which fall in the restricted bands, as defined in §15.205(a), must also comply with the radiated emission limits specified in §15.209(a) (see §15.205(c)).

According to FCC Part15.205, Restricted bands

MHz	MHz	MHz	GHz
0.090-0.110	16.42-16.423	399.9-410	4.5-5.15
10.495-0.505	16.69475-16.69525	608-614	5.35-5.46
2.1735-2.1905	16.80425-16.80475	960-1240	7.25-7.75
4.125-4.128	25.5-25.67	1300-1427	8.025-8.5
4.17725-4.17775	37.5-38.25	1435-1626.5	9.0-9.2
4.20725-4.20775	73-74.6	1645.5-1646.5	9.3-9.5
6.215-6.218	74.8-75.2	1660-1710	10.6-12.7
6.26775-6.26825	123-138	2200-2300	14.47-14.5
8.291-8.294	149.9-150.05	2310-2390	15.35-16.2
8.362-8.366	156.52475-156.52525	2483.5-2500	17.7-21.4
8.37625-8.38675	156.7-156.9	2690-2900	22.01-23.12
8.41425-8.41475	162.0125-167.17	3260-3267	23.6-24.0
12.29-12.293	167.72-173.2	3332-3339	31.2-31.8
12.51975-12.52025	240-285	3345.8-3358	36.43-36.5
12.57675-12.57725	322-335.4	3600-4400	(2)
13.36-13.41			

According to FCC Part15.205,the level of any transmitter spurious emission in Restricted bands shall not exceed the level of the emission specified in the following table

Restricted Frequency(MHz)	Field Strength (μV/m)	Field Strength (dBμV/m)	Measurement Distance
0.009-0.490	2400/F(KHz)	20 log (uV/m)	300
0.490-1.705	24000/F(KHz)	20 log (uV/m)	30
1.705-30	30	29.5	30
30-88	100	40	3
88-216	150	43.5	3
216-960	200	46	3
Above 960	500	54	3

8.6.3 Test Configuration

Test according to clause 7.2 radio frequency test setup 2

8.6.4 Test Procedure

This test is required for any spurious emission that falls in a Restricted Band, as defined in Section 15.205. It must be performed with the highest gain of each type of antenna proposed for use with the EUT. Use the following spectrum analyzer settings:
The EUT was placed on a turn table which is 0.8m above ground plane.
Maximum procedure was performed on the highest emissions to ensure EUT compliance.
Span = wide enough to fully capture the emission being measured
RBW = 1 MHz for f ≥ 1 GHz(1GHz to 25GHz), 100 kHz for f < 1 GHz(30MHz to 1GHz)
VBW ≥ RBW
Sweep = auto
Detector function = peak
Trace = max hold
Follow the guidelines in ANSI C63.10-2020 with respect to maximizing the emission by rotating the EUT, measuring the emission while the EUT is situated in three orthogonal planes (if appropriate), adjusting the measurement antenna height and polarization, etc. A pre-amp and a high pass filter are required for this test, in order to provide the measuring system with sufficient sensitivity. Allow the trace to stabilize. The peak reading of the emission, after being corrected by the antenna factor, cable loss, pre-amp gain, etc., is the peak field strength, which must comply with the limit specified in Section 15.35(b). Submit this data.
Now set the VBW to 10 Hz, while maintaining all of the other instrument settings. This peak level, once corrected, must comply with the limit specified in Section 15.209. If the dwell time per channel of the hopping signal is less than 100 ms, then the reading obtained with the 10 Hz VBW may be further adjusted by a “duty cycle correction factor”, derived from 20log(dwell time/100 ms), in an effort to demonstrate compliance with the 15.209 limit. Submit this data.
Repeat above procedures until all frequency measured was complete.

8.6.5 Test Results

Temperature:	22° C
Relative Humidity:	57%
ATM Pressure:	1011 mbar

■ Spurious Emission below 30MHz(9KHz to 30MHz)

Freq. (MHz)	Ant.Pol.	Emission Level(dBuV/m)		Limit 3m(dBuV/m)		Over(dB)	
	H/V	PK	AV	PK	AV	PK	AV
--	--	--	--	--	--	--	--

Note: the amplitude of spurious emission that is attenuated by more than 20dB below the permissible
limit has no need to be reported.
Distance extrapolation factor =40log(Specific distance/ test distance)(dB);
Limit line=Specific limits(dBuV) + distance extrapolation factor

■ Spurious Emission Above 1GHz(1GHz to 25GHz)

All the antenna(Antenna 1) and modes(GFSK) mode have been tested, and the result recorded was report as below:

Project No. :	ENB2604200247W004	Customer :	Qingdao Richmat
Sample No :	ENB2604200247W004	EUT :	Control box
Model :	C26M-B-A131-1R-310-LH 1-01	Mode :	TX2402
Voltage :	DC 29V	Engineer :	WK Luo
Temp :	16℃	Humi :	50%

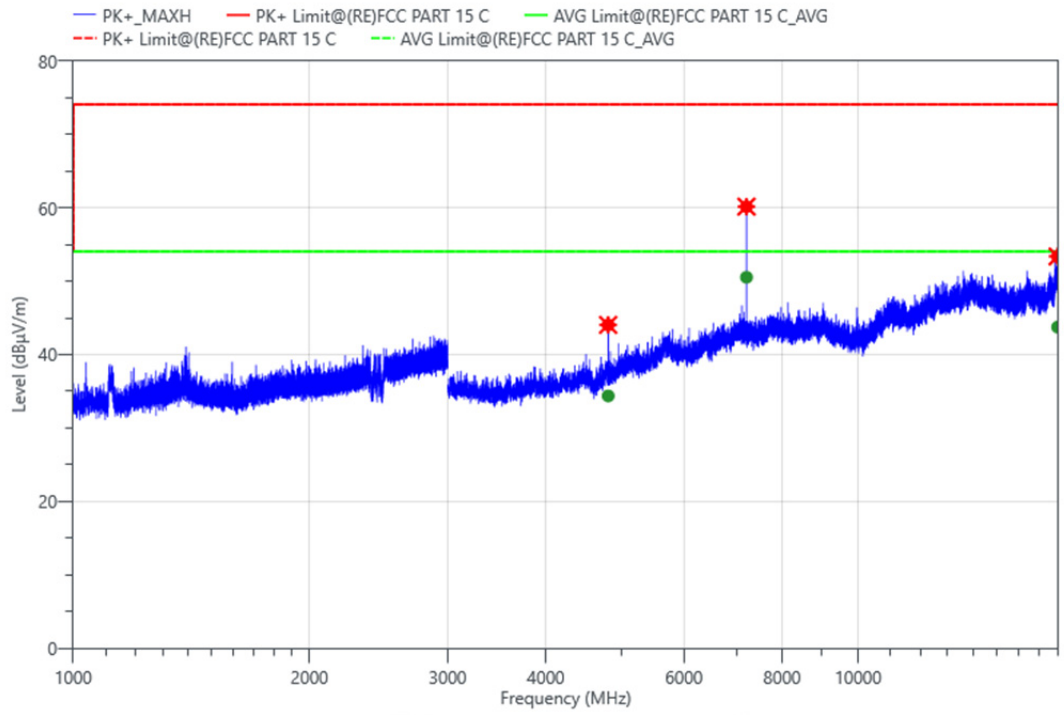

Final_Result (Margin=Limit-Meas.(Reading +Corr.))

No.	Freq. (MHz)	Reading (dBµV/m)	Corr. (dB)	Meas. (dBµV/m)	Limit (dBµV/m)	Margin (dB)	Det.	Pol.	Verdict
1	4803.500	52.85	-8.8	44.05	74.00	29.95	PK+	H	PASS
2	4803.500	43.17	-8.8	34.37	54.00	19.63	AVG	H	PASS
3	7206.500	60.73	-0.56	60.17	74.00	13.83	PK+	H	PASS
4	7206.500	51.10	-0.56	50.54	54.00	3.46	AVG	H	PASS
5	17955.000	40.27	13.11	53.38	74.00	20.62	PK+	H	PASS
6	17955.000	30.64	13.11	43.75	54.00	10.25	AVG	H	PASS

Project No. :	ENB2604200247W004	Customer :	Qingdao Richmat
Sample No :	ENB2604200247W004	EUT :	Control box
Model :	C26M-B-A131-1R-310-LH 1-01	Mode :	TX2402
Voltage :	DC 29V	Engineer :	WK Luo
Temp :	16℃	Humi :	50%

DateTime:2026-05-09 19:03:50

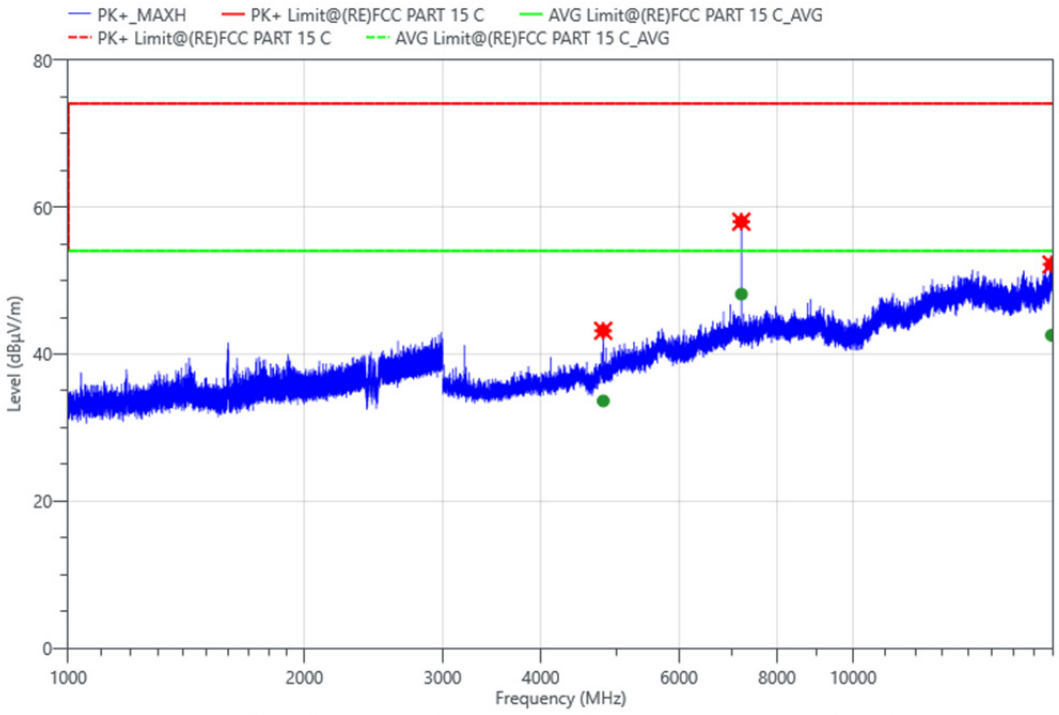

Final_Result (Margin=Limit-Meas.(Reading +Corr.))

No.	Freq. (MHz)	Reading (dBµV/m)	Corr. (dB)	Meas. (dBµV/m)	Limit (dBµV/m)	Margin (dB)	Det.	Pol.	Verdict
1	4804.000	51.98	-8.8	43.18	74.00	30.82	PK+	V	PASS
2	4804.000	42.43	-8.8	33.63	54.00	20.37	AVG	V	PASS
3	7205.000	58.58	-0.56	58.02	74.00	15.98	PK+	V	PASS
4	7205.000	48.72	-0.56	48.16	54.00	5.84	AVG	V	PASS
5	17898.500	39.77	12.43	52.20	74.00	21.80	PK+	V	PASS
6	17898.500	30.14	12.43	42.57	54.00	11.43	AVG	V	PASS

Project No. :	ENB2604200247W004	Customer :	Qingdao Richmat
Sample No :	ENB2604200247W004	EUT :	Control box
Model :	C26M-B-A131-1R-310-LH 1-01	Mode :	TX2440
Voltage :	DC 29V	Engineer :	WK Luo
Temp :	16℃	Humi :	50%

DateTime:2026-05-09 19:13:18

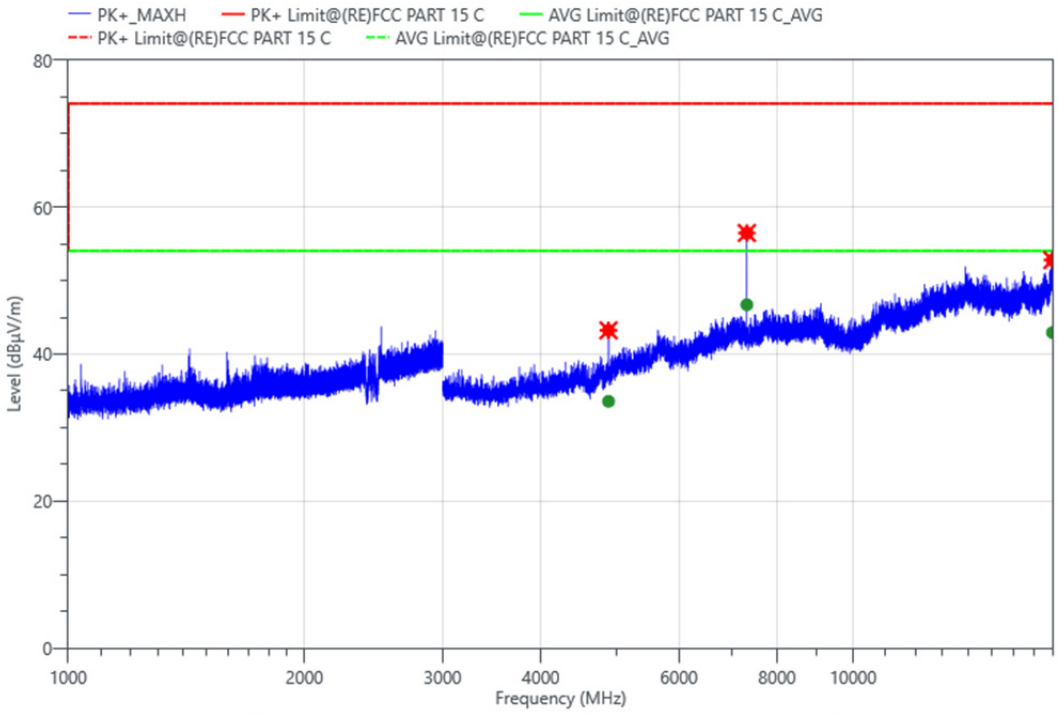

Final_Result (Margin=Limit-Meas.(Reading +Corr.))

No.	Freq. (MHz)	Reading (dBµV/m)	Corr. (dB)	Meas. (dBµV/m)	Limit (dBµV/m)	Margin (dB)	Det.	Pol.	Verdict
1	4879.500	51.46	-8.23	43.23	74.00	30.77	PK+	V	PASS
2	4879.500	41.81	-8.23	33.58	54.00	20.42	AVG	V	PASS
3	7320.500	56.86	-0.38	56.48	74.00	17.52	PK+	V	PASS
4	7320.500	47.10	-0.38	46.72	54.00	7.28	AVG	V	PASS
5	17944.000	39.81	12.98	52.79	74.00	21.21	PK+	V	PASS
6	17944.000	29.95	12.98	42.93	54.00	11.07	AVG	V	PASS

Project No. :	ENB2604200247W004	Customer :	Qingdao Richmat
Sample No :	ENB2604200247W004	EUT :	Control box
Model :	C26M-B-A131-1R-310-LH 1-01	Mode :	TX2440
Voltage :	DC 29V	Engineer :	WK Luo
Temp :	16℃	Humi :	50%

DateTime:2026-05-09 19:15:43

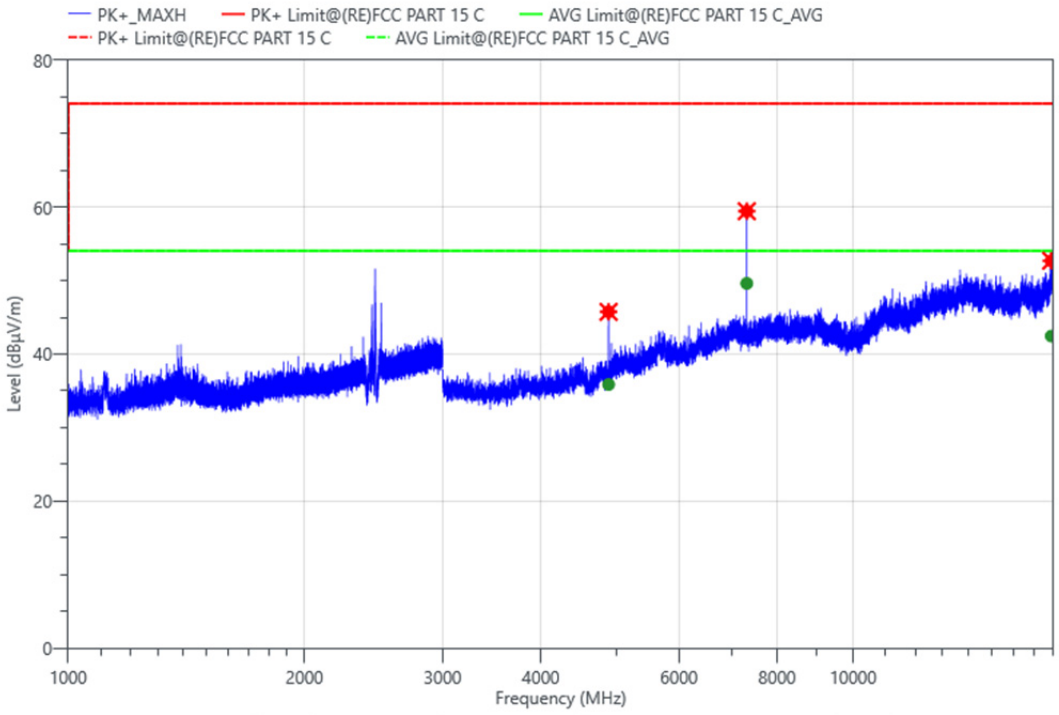

Final_Result (Margin=Limit-Meas.(Reading +Corr.))

No.	Freq. (MHz)	Reading (dBµV/m)	Corr. (dB)	Meas. (dBµV/m)	Limit (dBµV/m)	Margin (dB)	Det.	Pol.	Verdict
1	4880.500	53.97	-8.22	45.75	74.00	28.25	PK+	H	PASS
2	4880.500	44.09	-8.22	35.87	54.00	18.13	AVG	H	PASS
3	7319.000	59.83	-0.38	59.45	74.00	14.55	PK+	H	PASS
4	7319.000	50.01	-0.38	49.63	54.00	4.37	AVG	H	PASS
5	17886.000	40.35	12.35	52.70	74.00	21.30	PK+	H	PASS
6	17886.000	30.11	12.35	42.46	54.00	11.54	AVG	H	PASS

Project No. :	ENB2604200247W004	Customer :	Qingdao Richmat
Sample No :	ENB2604200247W004	EUT :	Control box
Model :	C26M-B-A131-1R-310-LH 1-01	Mode :	TX2480
Voltage :	DC 29V	Engineer :	WK Luo
Temp :	16℃	Humi :	50%

DateTime:2026-05-09 19:20:10

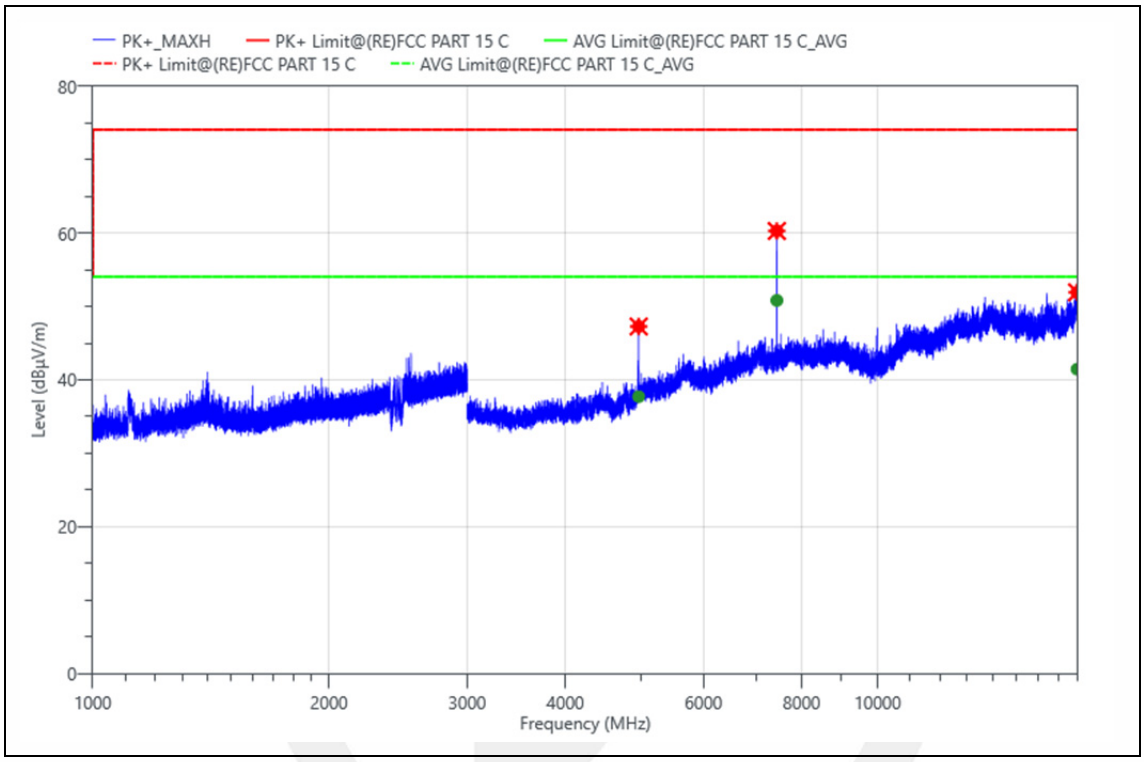

Final_Result (Margin=Limit-Meas.(Reading +Corr.))

No.	Freq. (MHz)	Reading (dBµV/m)	Corr. (dB)	Meas. (dBµV/m)	Limit (dBµV/m)	Margin (dB)	Det.	Pol.	Verdict
1	4960.500	54.68	-7.4	47.28	74.00	26.72	PK+	H	PASS
2	4960.500	45.12	-7.4	37.72	54.00	16.28	AVG	H	PASS
3	7439.000	60.43	-0.14	60.29	74.00	13.71	PK+	H	PASS
4	7439.000	50.97	-0.14	50.83	54.00	3.17	AVG	H	PASS
5	17952.000	38.86	13.08	51.94	74.00	22.06	PK+	H	PASS
6	17952.000	28.38	13.08	41.46	54.00	12.54	AVG	H	PASS

Project No. :	ENB2604200247W004	Customer :	Qingdao Richmat
Sample No :	ENB2604200247W004	EUT :	Control box
Model :	C26M-B-A131-1R-310-LH 1-01	Mode :	TX2480
Voltage :	DC 29V	Engineer :	WK Luo
Temp :	16℃	Humi :	50%

DateTime:2026-05-09 19:24:16

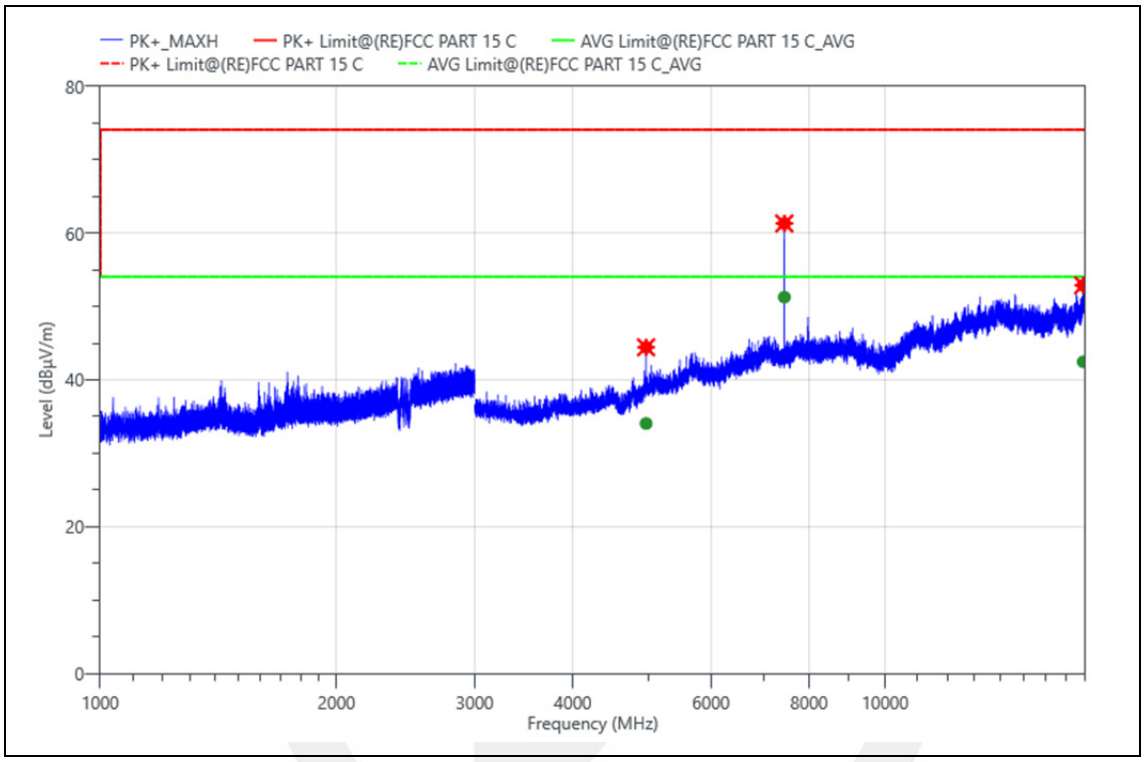

Final_Result (Margin=Limit-Meas.(Reading +Corr.))

No.	Freq. (MHz)	Reading (dBµV/m)	Corr. (dB)	Meas. (dBµV/m)	Limit (dBµV/m)	Margin (dB)	Det.	Pol.	Verdict
1	4959.500	51.86	-7.42	44.44	74.00	29.56	PK+	V	PASS
2	4959.500	41.48	-7.42	34.06	54.00	19.94	AVG	V	PASS
3	7440.500	61.45	-0.13	61.32	74.00	12.68	PK+	V	PASS
4	7440.500	51.40	-0.13	51.27	54.00	2.73	AVG	V	PASS
5	17882.500	40.56	12.33	52.89	74.00	21.11	PK+	V	PASS
6	17882.500	30.14	12.33	42.47	54.00	11.53	AVG	V	PASS

Note: (1) All Readings are Peak Value (VBW=3MHz) and Average Value (VBW=1kHz).
(2) Emission Level= Reading Level+Correct Factor.
(3) Correct Factor= Ant_F + Cab_L– Preamp
(4) The reading of emissions are attenuated more than 20dB below the permissible limits or the field strength is too small to be measured.
(5)The test frequency range, 18GHz~25GHz test result on peak is lower than average limit, all is the noise base, therefore no data appear in the report.

Spurious Emission in Restricted Band 2310-2390MHz and 2483.5-2500MHz

Project No. :	ENB2604200247W004	Customer :	Qingdao Richmat
Sample No :	ENB2604200247W004-1-1	EUT :	Control box
Model :	C26M-B-A131-1R-310-LH 1-01	Mode :	TX2402
Voltage :	DC 29V	Engineer :	WK Luo
Temp :	16℃	Humi :	50%

DateTime:2026-06-07 16:21:14

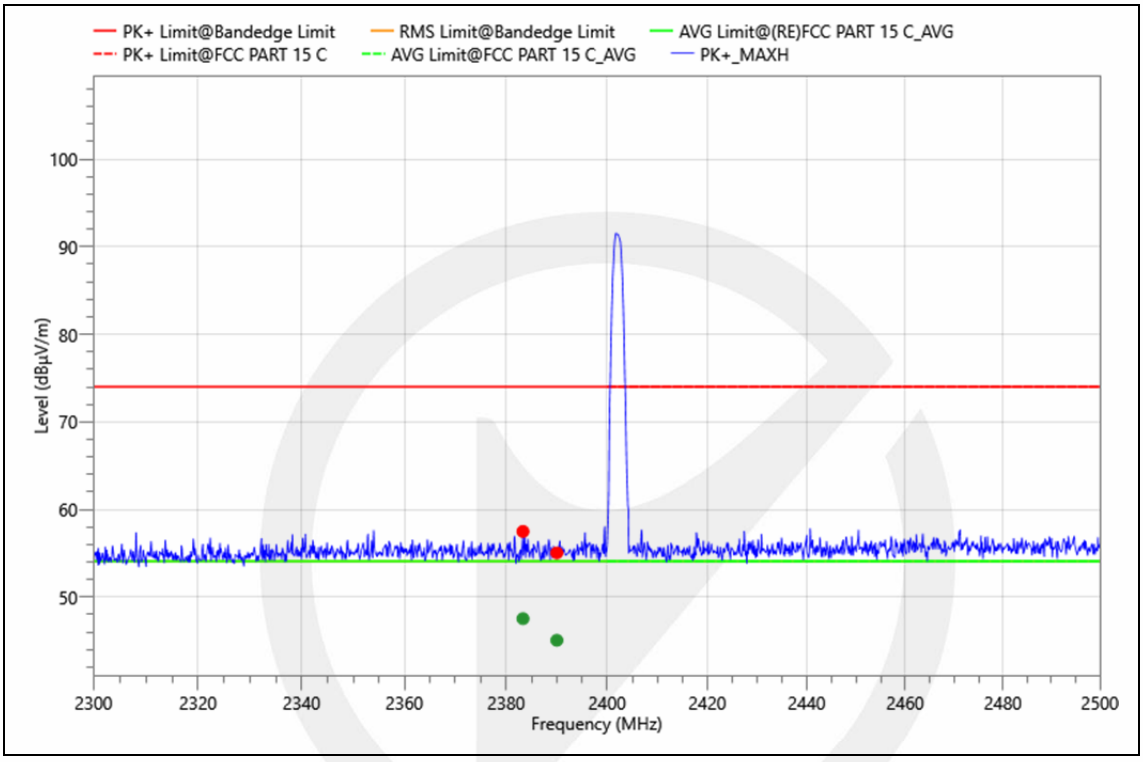

Final_Result

(Margin=Limit-Meas.(Reading +Corr.))

No.	Freq. (MHz)	Reading (dBµV/m)	Corr. (dB)	Meas. (dBµV/m)	Limit (dBµV/m)	Margin (dB)	Det.	Pol.	Verdict
1	2383.300	27.44	30.05	57.49	74.00	16.51	PK+	V	PASS
2	2383.300	17.48	30.05	47.53	54.00	6.47	AVG	V	PASS
3	2390.000	24.98	30.06	55.04	74.00	18.96	PK+	V	PASS
4	2390.000	15.00	30.06	45.06	54.00	8.94	AVG	V	PASS

Project No. :	ENB2604200247W004	Customer :	Qingdao Richmat
Sample No :	ENB2604200247W004	EUT :	Control box
Model :	C26M-B-A131-1R-310-LH 1-01	Mode :	TX2402
Voltage :	DC 29V	Engineer :	WK Luo
Temp :	16℃	Humi :	50%

DateTime:2026-06-07 16:18:16

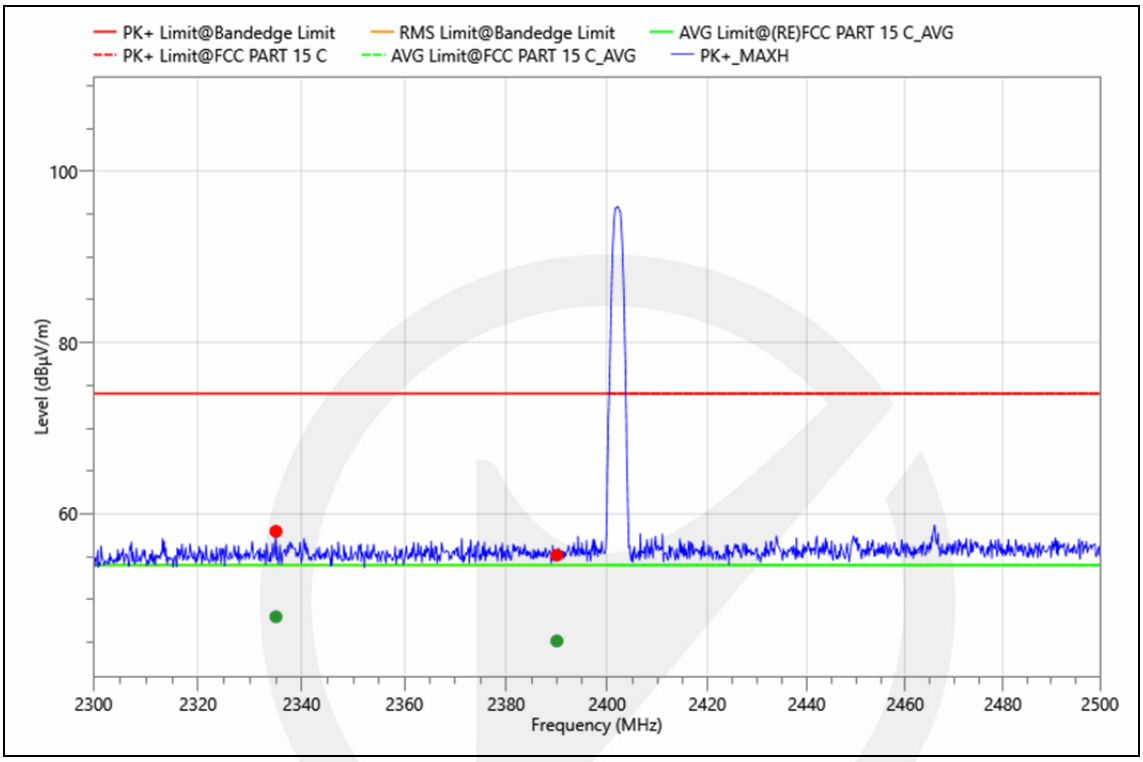

Final_Result (Margin=Limit-Meas.(Reading +Corr.))

No.	Freq. (MHz)	Reading (dBµV/m)	Corr. (dB)	Meas. (dBµV/m)	Limit (dBµV/m)	Margin (dB)	Det.	Pol.	Verdict
1	2335.000	28.03	29.94	57.97	74.00	16.03	PK+	H	PASS
2	2335.000	18.07	29.94	48.01	54.00	5.99	AVG	H	PASS
3	2390.000	25.14	30.06	55.20	74.00	18.80	PK+	H	PASS
4	2390.000	15.12	30.06	45.18	54.00	8.82	AVG	H	PASS

Project No. :	ENB2604200247W004	Customer :	Qingdao Richmat
Sample No :	ENB2604200247W004	EUT :	Control box
Model :	C26M-B-A131-1R-310-LH 1-01	Mode :	TX2480
Voltage :	DC 29V	Engineer :	WK Luo
Temp :	16℃	Humi :	50%

DateTime:2026-06-07 16:24:43

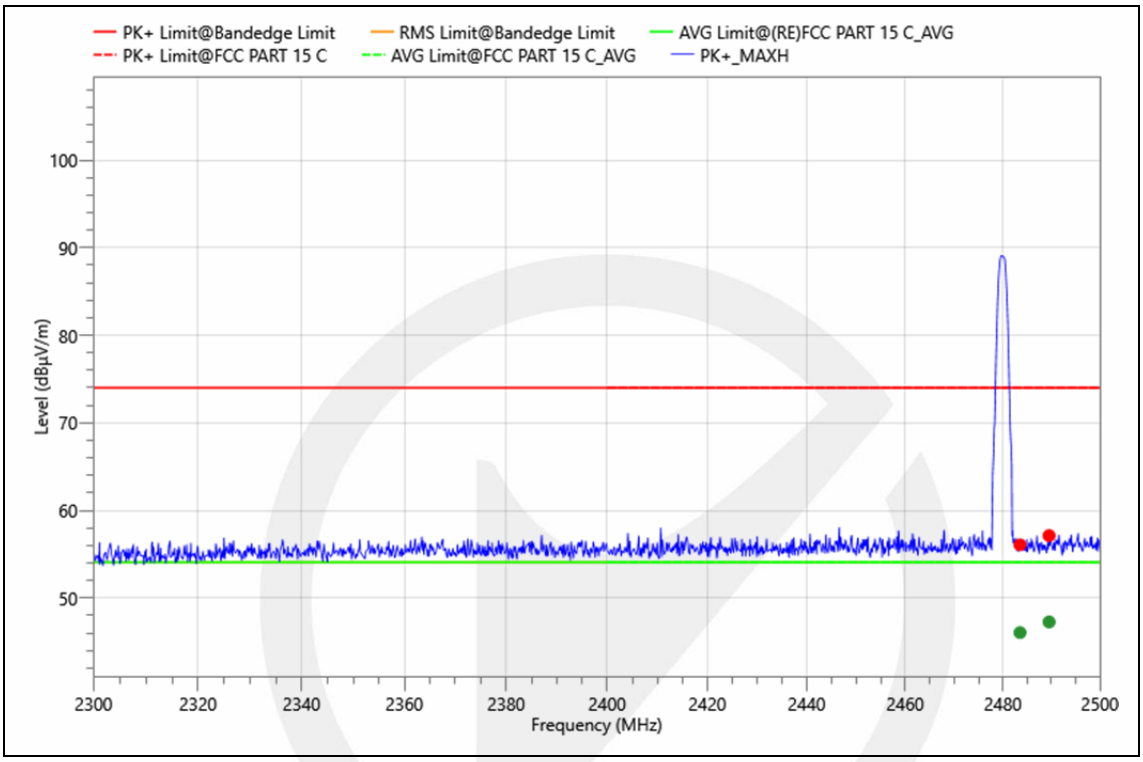

Final_Result

(Margin=Limit-Meas.(Reading +Corr.))

No.	Freq. (MHz)	Reading (dBµV/m)	Corr. (dB)	Meas. (dBµV/m)	Limit (dBµV/m)	Margin (dB)	Det.	Pol.	Verdict
1	2483.500	25.73	30.34	56.07	74.00	17.93	PK+	V	PASS
2	2483.500	15.70	30.34	46.04	54.00	7.96	AVG	V	PASS
3	2489.500	26.76	30.36	57.12	74.00	16.88	PK+	V	PASS
4	2489.500	16.90	30.36	47.26	54.00	6.74	AVG	V	PASS

Project No. :	ENB2604200247W004	Customer :	Qingdao Richmat
Sample No :	ENB2604200247W004	EUT :	Control box
Model :	C26M-B-A131-1R-310-LH 1-01	Mode :	TX2480
Voltage :	DC 29V	Engineer :	WK Luo
Temp :	16℃	Humi :	50%

DateTime:2026-06-07 16:26:45

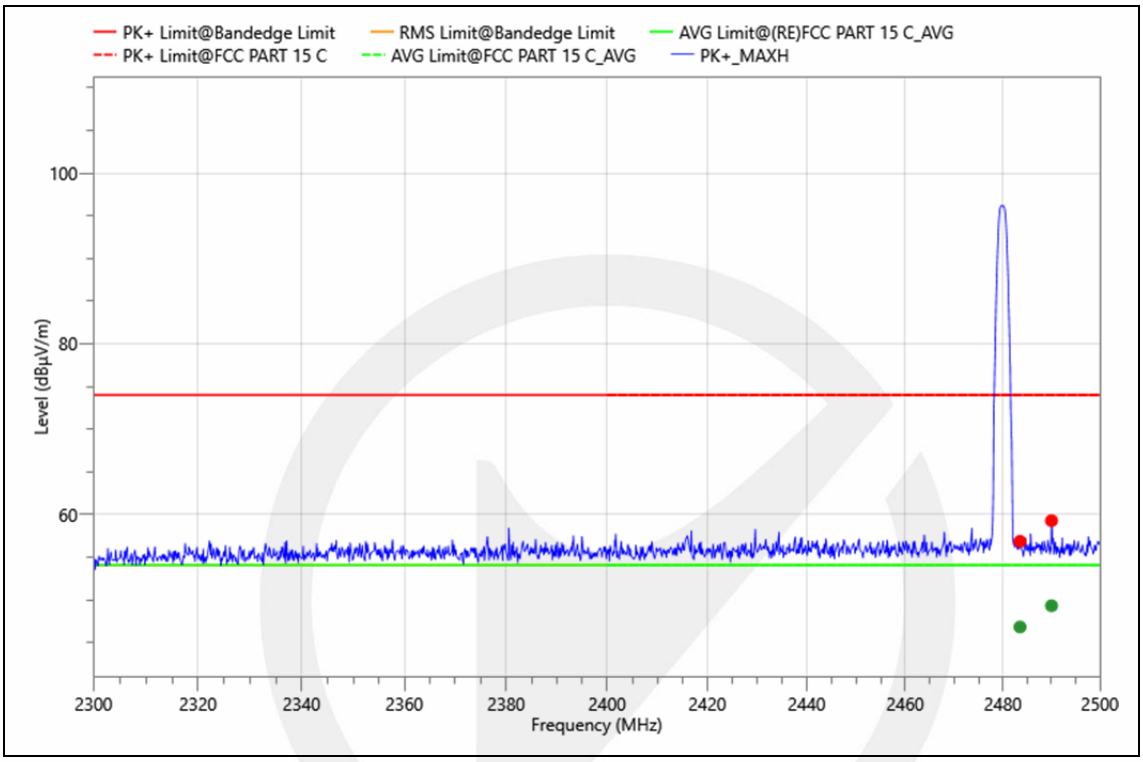

Final_Result (Margin=Limit-Meas.(Reading +Corr.))

No.	Freq. (MHz)	Reading (dBµV/m)	Corr. (dB)	Meas. (dBµV/m)	Limit (dBµV/m)	Margin (dB)	Det.	Pol.	Verdict
1	2483.500	26.52	30.34	56.86	74.00	17.14	PK+	H	PASS
2	2483.500	16.49	30.34	46.83	54.00	7.17	AVG	H	PASS
3	2490.000	28.93	30.36	59.29	74.00	14.71	PK+	H	PASS
4	2490.000	18.96	30.36	49.32	54.00	4.68	AVG	H	PASS

Note: (1) All Readings are Peak Value (VBW=3MHz) and Average Value (VBW=1kHz).
(2) Emission Level= Reading Level+Correct Factor.
(3) Correct Factor= Ant_F + Cab_L - Preamp
(4) The reading of emissions are attenuated more than 20dB below the permissible limits or the field strength is too small to be measured.

■ Spurious Emission below 1GHz(30MHz to 1GHz)

Project No. :	ENB2604200247W004	Customer :	Qingdao Richmat Intelligence Technology inc
Sample No :	ENB2604200247W004-3-3	EUT :	Control box
Model :	C26M-B-A131-1R-310-LH 1-01	Mode :	TX 2402
Voltage :	DC 29V/0.5A	Engineer :	Matteus
Temp :	21℃	Humi :	69%

DateTime:2026-05-07 01:04:43

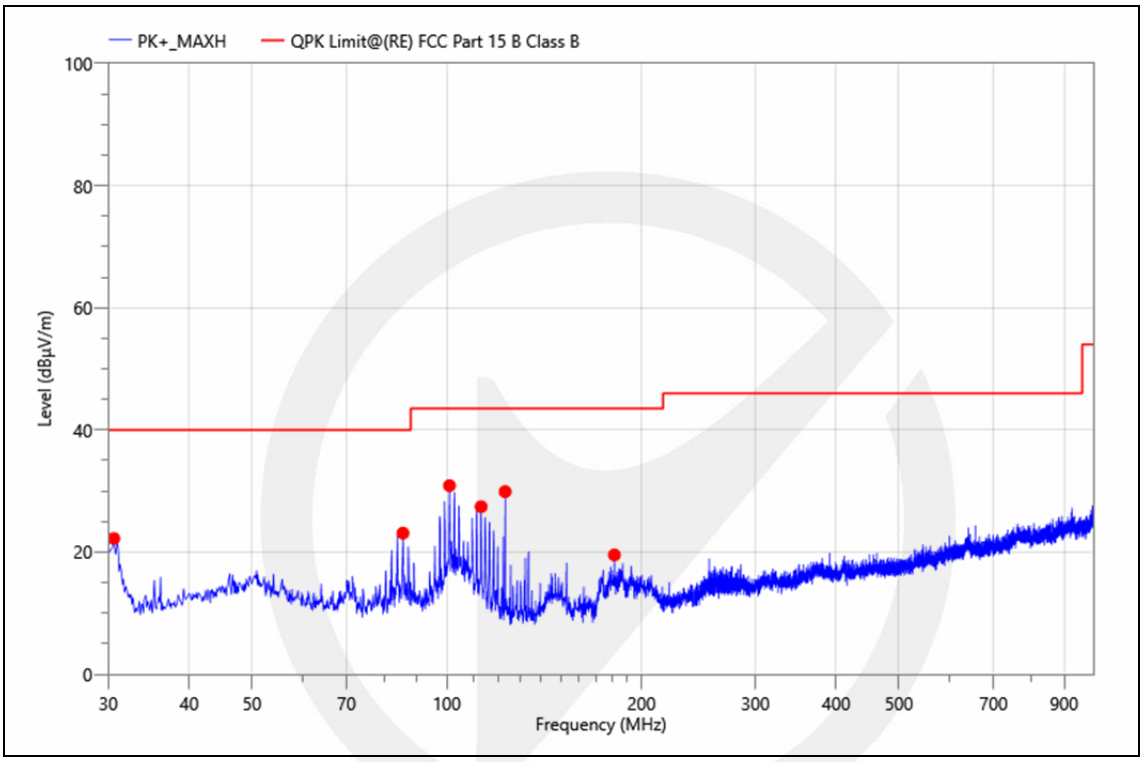

Final_Result (Margin=Limit-Meas.(Reading +Corr.))

No.	Freq. (MHz)	Reading (dBµV)	Corr. (dB)	Meas. (dBµV/m)	Limit (dBµV/m)	Margin (dB)	Det.	Height (cm)	Pol.	Azimuth (deg)	Verdict
1	30.582	49.06	-26.83	22.23	40.00	17.77	QPK	100	V	188.7	PASS
2	85.581	51.93	-28.82	23.11	40.00	16.89	QPK	100	V	312.6	PASS
3	101.004	55.90	-25.01	30.89	43.50	12.61	QPK	100	V	275.8	PASS
4	113.032	53.03	-25.59	27.44	43.50	16.06	QPK	100	V	212.6	PASS
5	123.120	56.89	-26.99	29.90	43.50	13.60	QPK	100	V	239.6	PASS
6	181.611	46.16	-26.61	19.55	43.50	23.95	QPK	100	V	352.2	PASS

Project No. :	ENB2604200247W004	Customer :	Qingdao Richmat Intelligence Technology inc
Sample No :	ENB2604200247W004-3-3	EUT :	Control box
Model :	C26M-B-A131-1R-310-LH 1-01	Mode :	TX 2402
Voltage :	DC 29V/0.5A	Engineer :	Matteus
Temp :	21℃	Humi :	69%

DateTime:2026-05-07 01:07:51

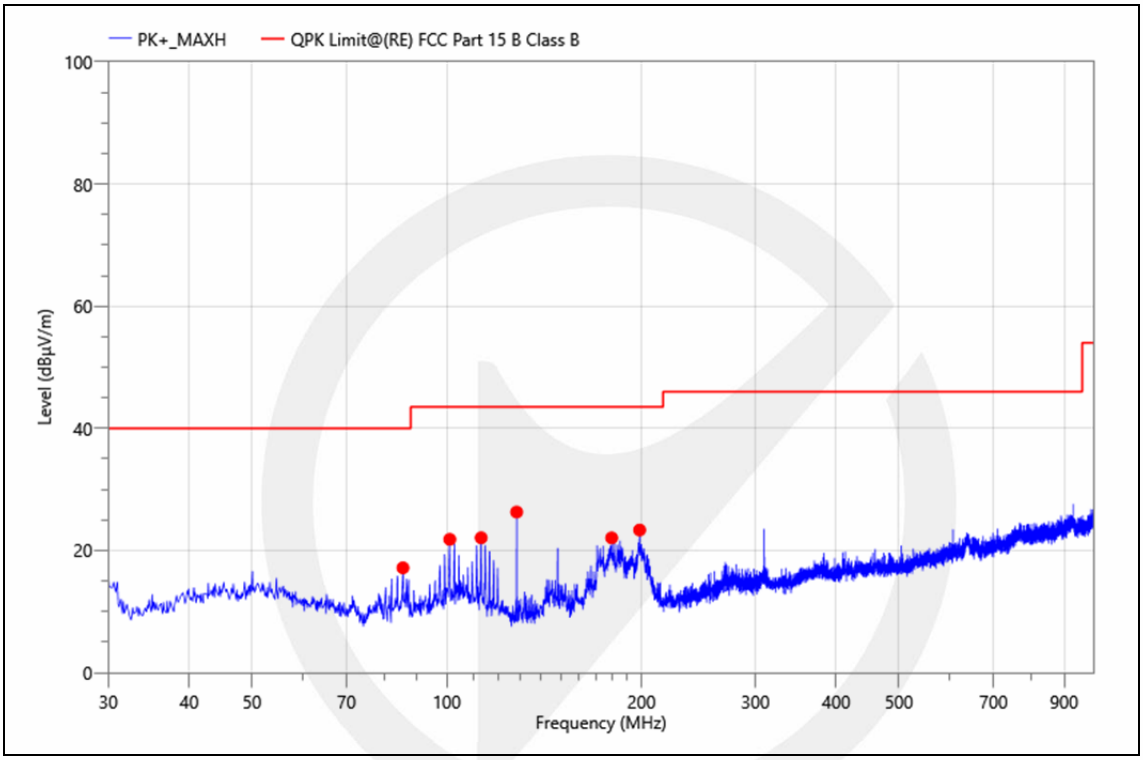

Final_Result

(Margin=Limit-Meas.(Reading +Corr.))

No.	Freq. (MHz)	Reading (dBµV)	Corr. (dB)	Meas. (dBµV/m)	Limit (dBµV/m)	Margin (dB)	Det.	Height (cm)	Pol.	Azimuth (deg)	Verdict
1	85.581	45.99	-28.82	17.17	40.00	22.83	QPK	100	H	189.8	PASS
2	101.101	46.88	-25.05	21.83	43.50	21.67	QPK	100	H	67.6	PASS
3	113.032	47.68	-25.59	22.09	43.50	21.41	QPK	100	H	40.5	PASS
4	128.261	54.13	-27.83	26.30	43.50	17.20	QPK	200	H	349.7	PASS
5	179.865	49.45	-27.38	22.07	43.50	21.43	QPK	100	H	83.8	PASS
6	198.683	48.75	-25.39	23.36	43.50	20.14	QPK	200	H	75.8	PASS

Project No. :	ENB2604200247W004	Customer :	Qingdao Richmat Intelligence Technology inc
Sample No :	ENB2604200247W004-3-3	EUT :	Control box
Model :	C26M-B-A131-1R-310-LH 1-01	Mode :	TX 2440
Voltage :	DC 29V/0.5A	Engineer :	Matteus
Temp :	21℃	Humi :	69%

DateTime:2026-05-07 01:09:59

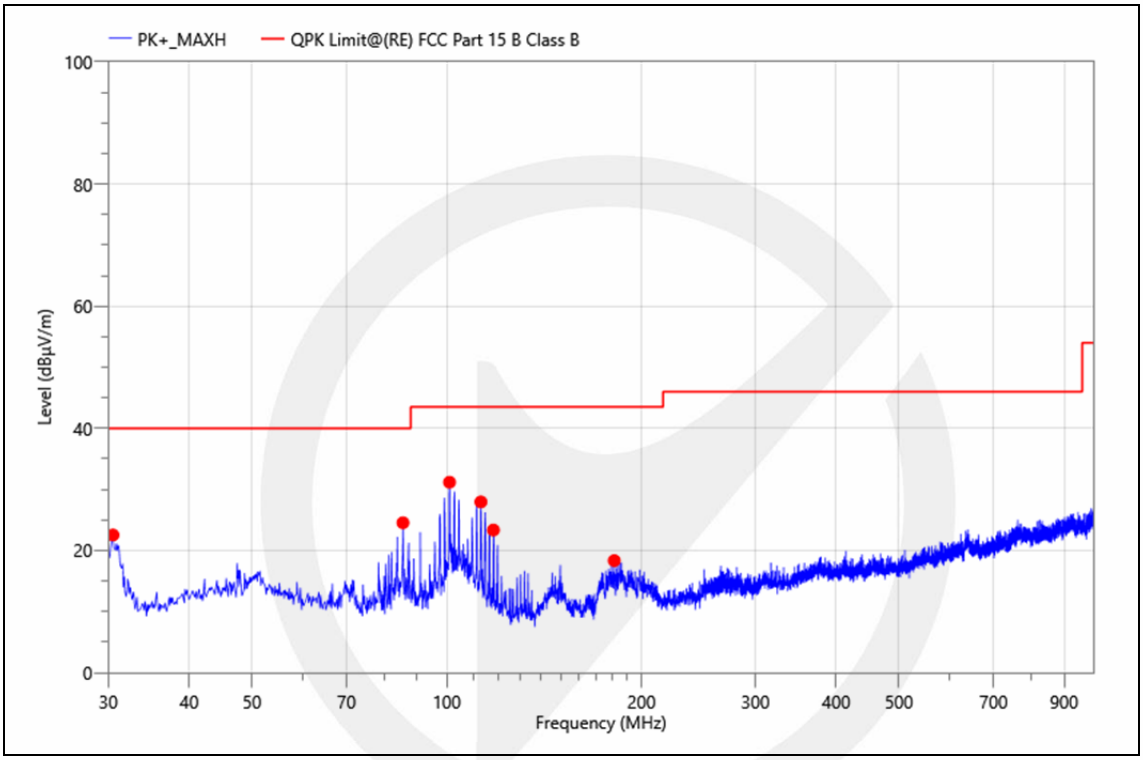

Final_Result (Margin=Limit-Meas.(Reading +Corr.))

No.	Freq. (MHz)	Reading (dBµV)	Corr. (dB)	Meas. (dBµV/m)	Limit (dBµV/m)	Margin (dB)	Det.	Height (cm)	Pol.	Azimuth (deg)	Verdict
1	30.485	49.35	-26.8	22.55	40.00	17.45	QPK	100	V	254.1	PASS
2	85.581	53.37	-28.82	24.55	40.00	15.45	QPK	100	V	301.5	PASS
3	101.004	56.20	-25.01	31.19	43.50	12.31	QPK	100	V	281.1	PASS
4	112.935	53.56	-25.6	27.96	43.50	15.54	QPK	100	V	250.4	PASS
5	118.076	50.15	-26.79	23.36	43.50	20.14	QPK	100	V	171.2	PASS
6	181.514	44.96	-26.61	18.35	43.50	25.15	QPK	100	V	319.9	PASS

Project No. :	ENB2604200247W004	Customer :	Qingdao Richmat Intelligence Technology inc
Sample No :	ENB2604200247W004-3-3	EUT :	Control box
Model :	C26M-B-A131-1R-310-LH 1-01	Mode :	TX 2440
Voltage :	DC 29V/0.5A	Engineer :	Matteus
Temp :	21℃	Humi :	69%

DateTime:2026-05-07 01:11:52

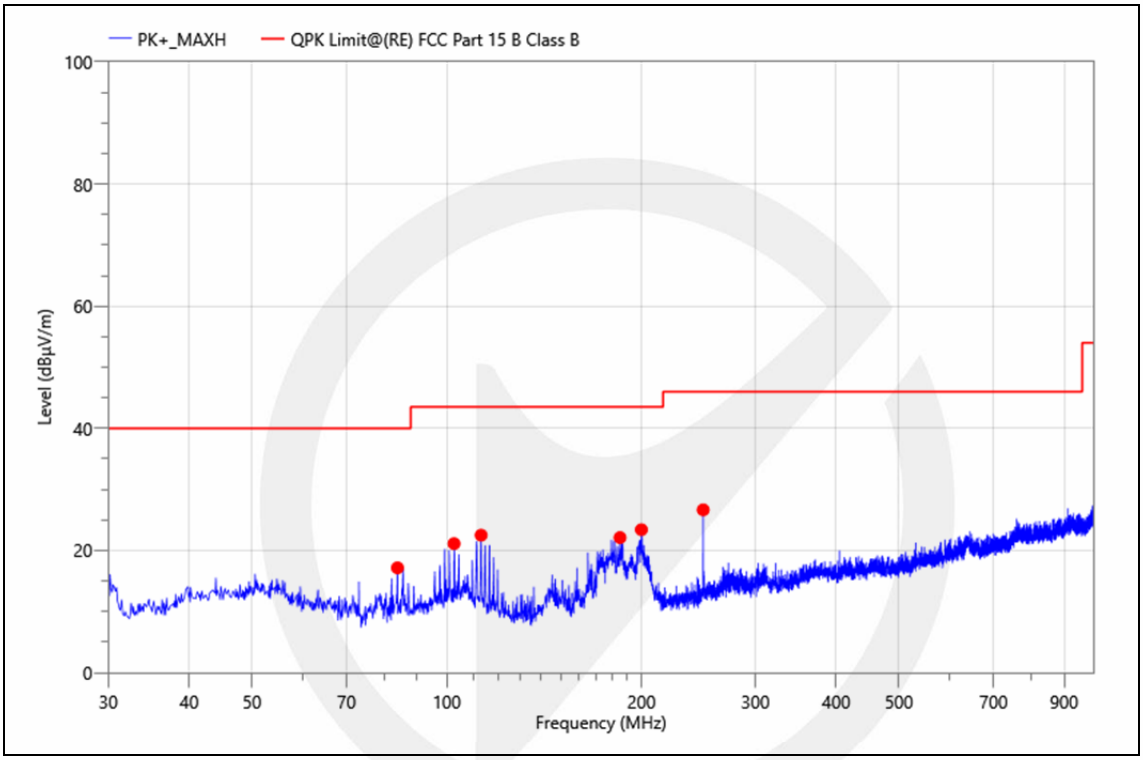

Final_Result (Margin=Limit-Meas.(Reading +Corr.))

No.	Freq. (MHz)	Reading (dBµV)	Corr. (dB)	Meas. (dBµV/m)	Limit (dBµV/m)	Margin (dB)	Det.	Height (cm)	Pol.	Azimuth (deg)	Verdict
1	83.932	46.39	-29.22	17.17	40.00	22.83	QPK	100	H	227.6	PASS
2	102.653	46.39	-25.26	21.13	43.50	22.37	QPK	100	H	179.5	PASS
3	113.032	48.10	-25.59	22.51	43.50	20.99	QPK	100	H	51.5	PASS
4	185.297	48.88	-26.76	22.12	43.50	21.38	QPK	100	H	102.0	PASS
5	199.944	49.14	-25.73	23.41	43.50	20.09	QPK	200	H	85.9	PASS
6	249.123	51.10	-24.43	26.67	46.00	19.33	QPK	200	H	348.2	PASS

Project No. :	ENB2604200247W004	Customer :	Qingdao Richmat Intelligence Technology inc
Sample No :	ENB2604200247W004-3-3	EUT :	Control box
Model :	C26M-B-A131-1R-310-LH 1-01	Mode :	TX 2480
Voltage :	DC 29V/0.5A	Engineer :	Matteus
Temp :	21℃	Humi :	69%

DateTime:2026-05-07 01:13:39

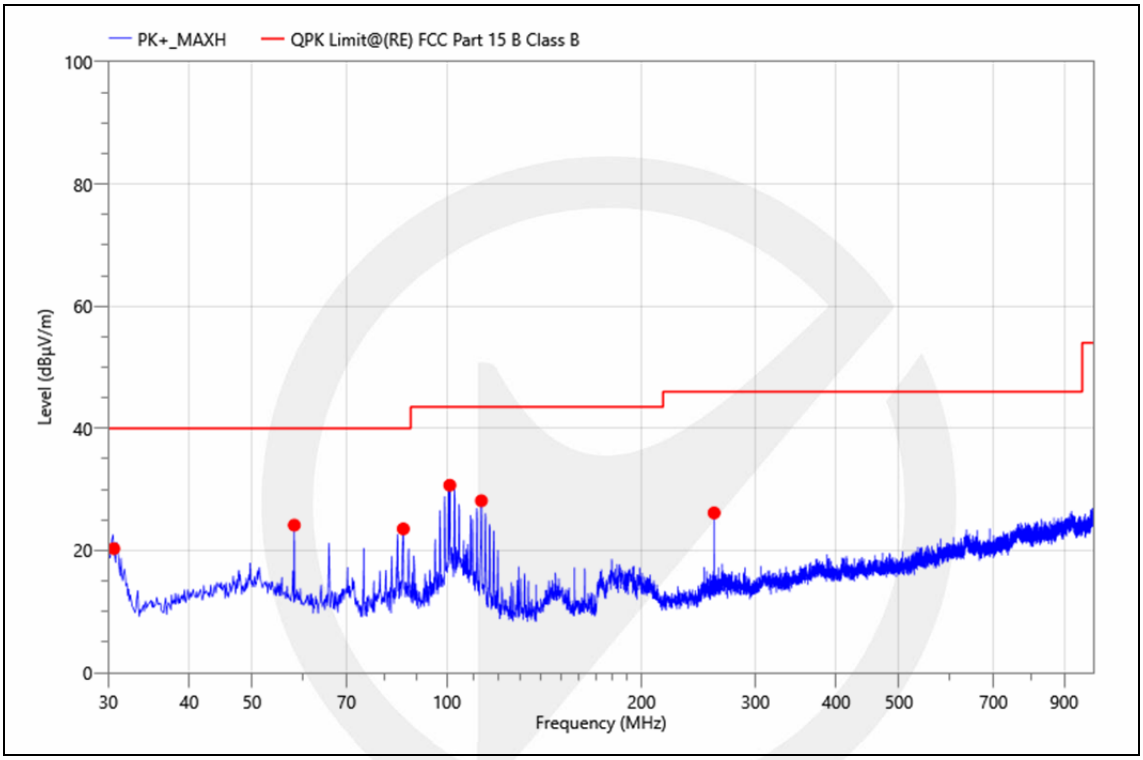

Final_Result (Margin=Limit-Meas.(Reading +Corr.))

No.	Freq. (MHz)	Reading (dBµV)	Corr. (dB)	Meas. (dBµV/m)	Limit (dBµV/m)	Margin (dB)	Det.	Height (cm)	Pol.	Azimuth (deg)	Verdict
1	30.582	47.15	-26.83	20.32	40.00	19.68	QPK	100	V	28.7	PASS
2	58.130	48.82	-24.66	24.16	40.00	15.84	QPK	100	V	354.4	PASS
3	85.678	52.29	-28.74	23.55	40.00	16.45	QPK	100	V	288.8	PASS
4	101.101	55.74	-25.05	30.69	43.50	12.81	QPK	100	V	262.1	PASS
5	113.129	53.77	-25.62	28.15	43.50	15.35	QPK	100	V	185.7	PASS
6	259.017	50.69	-24.53	26.16	46.00	19.84	QPK	100	V	188.5	PASS

Project No. :	ENB2604200247W004	Customer :	Qingdao Richmat Intelligence Technology inc
Sample No :	ENB2604200247W004-3-3	EUT :	Control box
Model :	C26M-B-A131-1R-310-LH 1-01	Mode :	TX 2480
Voltage :	DC 29V/0.5A	Engineer :	Matteus
Temp :	21°C	Humi :	69%

DateTime:2026-05-07 01:15:21

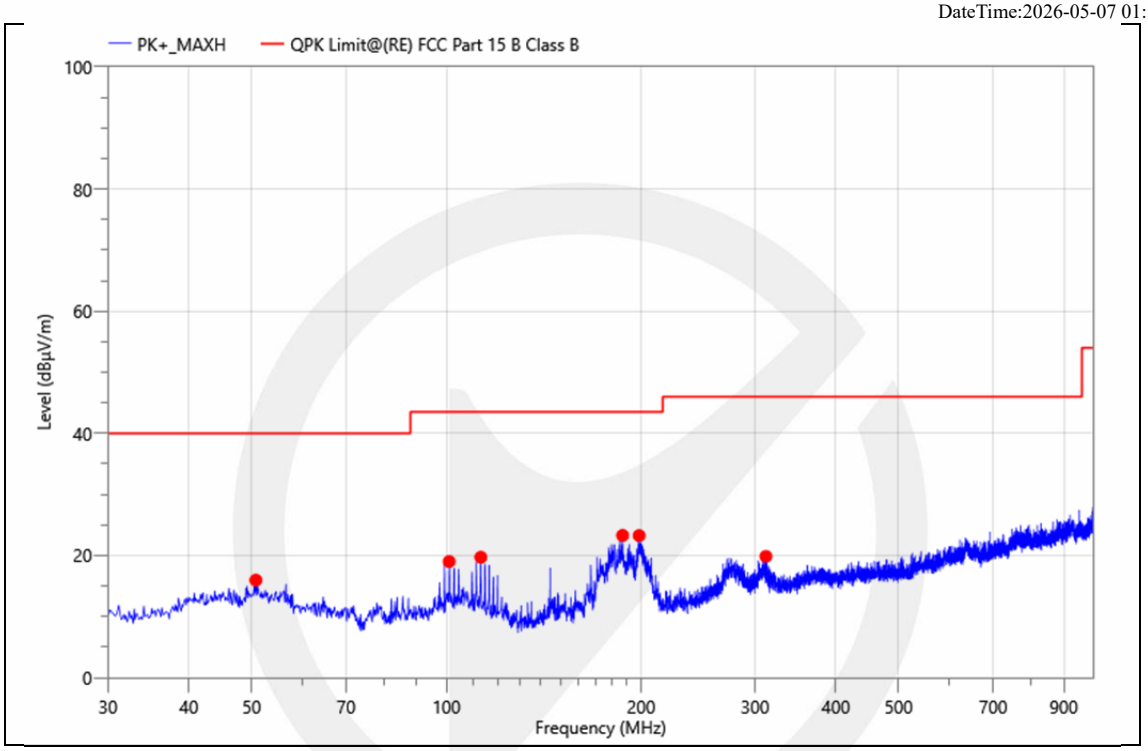

Final_Result (Margin=Limit-Meas.(Reading +Corr.))

No.	Freq. (MHz)	Reading (dBµV)	Corr. (dB)	Meas. (dBµV/m)	Limit (dBµV/m)	Margin (dB)	Det.	Height (cm)	Pol.	Azimuth (deg)	Verdict
1	50.758	39.19	-23.22	15.97	40.00	24.03	QPK	100	H	257.5	PASS
2	101.004	44.03	-25.01	19.02	43.50	24.48	QPK	100	H	86.1	PASS
3	113.032	45.31	-25.59	19.72	43.50	23.78	QPK	100	H	33.3	PASS
4	187.237	49.38	-26.09	23.29	43.50	20.21	QPK	100	H	83.5	PASS
5	198.586	48.65	-25.38	23.27	43.50	20.23	QPK	100	H	91.6	PASS
6	311.785	42.46	-22.59	19.87	46.00	26.13	QPK	100	H	126.0	PASS

8.7 CONDUCTED EMISSIONS TEST

8.7.1 Applicable Standard

According to FCC Part 15.207(a)

8.7.2 Conformance Limit

Conducted Emission Limit		
Frequency(MHz)	Quasi-peak	Average
0.15-0.5	66-56	56-46
0.5-5.0	56	46
5.0-30.0	60	50

Note: 1. The lower limit shall apply at the transition frequencies
2. The limit decreases in line with the logarithm of the frequency in the range of 0.15 to 0.50MHz.

8.7.3 Test Configuration

Test according to clause 7.3 conducted emission test setup

8.7.4 Test Procedure

The EUT was placed on a table which is 0.8m above ground plane.
Maximum procedure was performed on the highest emissions to ensure EUT compliance.
Repeat above procedures until all frequency measured were complete.

8.7.5 Test Results

N/A

Note: This device is only compatible with DC power supply.

8.8 ANTENNA APPLICATION

8.8.1 Antenna Requirement

Standard	Requirement
FCC CRF Part15.203	An intentional radiator shall be designed to ensure that no antenna other than that furnished by the responsible party shall be used with the device. The use of a permanently attached antenna or of an antenna that uses a unique coupling to the intentional radiator shall be considered sufficient to comply with the provisions of this section. The manufacturer may design the unit so that a broken antenna can be replaced by the user, but the use of a standard antenna jack or electrical connector is prohibited.
FCC 47 CFR Part 15.247 (b)	If transmitting antennas of directional gain greater than 6dBi are used, the power shall be reduced by the amount in dB that the directional gain of the antenna exceeds 6dBi.

8.8.2 Result

PASS.

Note:
- ☑ Antenna use a permanently attached antenna which is not replaceable.
- ☐ Not using a standard antenna jack or electrical connector for antenna replacement
- ☐ The antenna has to be professionally installed (please provide method of installation)

Please refer to the attached document Internal Photos to show the antenna connector.

--------- END OF REPORT --------