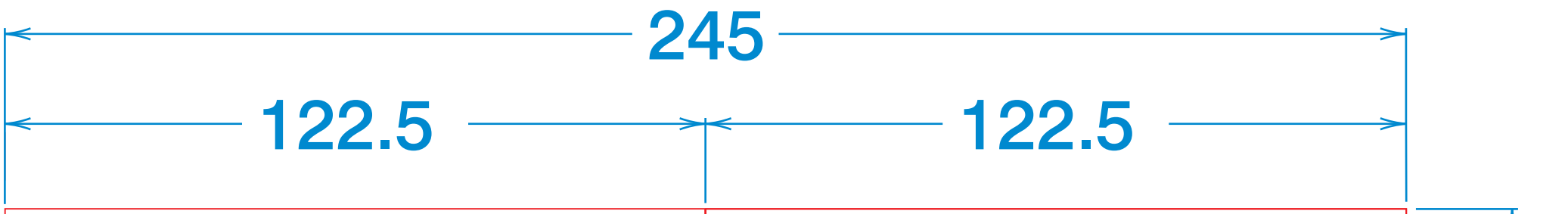

USER MANUAL

Waterproof Light Projector with Remote Controller
(LBS-211)

Voltage:	110-265v 50-60HZ
Wattage:	pre-heat 14W; regular 3W
Light source:	**green laser 30mw + red laser 100mw**
Maximum Laser Power (Single Beam):	**Less than 1mw**
Working temperature:	-25 degree to 32 degree (please allow 2-15 mins for preheating to start in low temperature)
External color:	black
Adaptor:	European standard
Cable:	3 meter (AC+DC)
Product waterproof grade:	IP65
Product dimension:	∅99mm*90mmH
Weight:	0.85 kg
Package dimension:	**24cm*14cm*16cm**
Control range:	<5m

Installation:

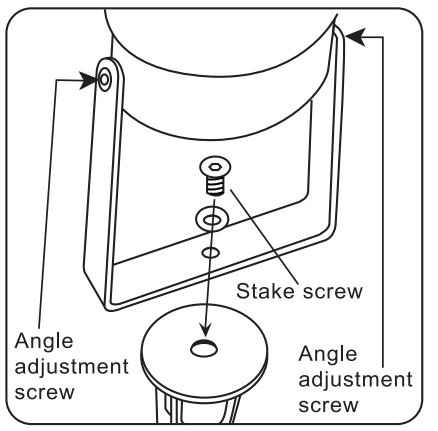

Assembly diagram 1

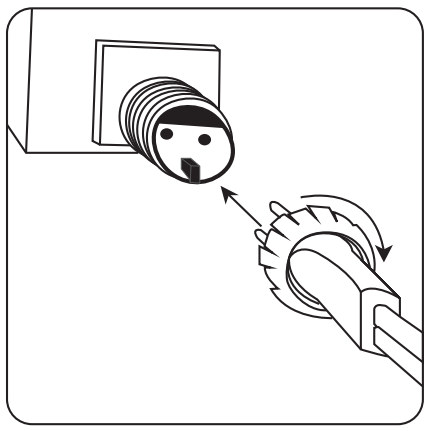

Assembly diagram

First, install a 23A battery in the remote controller. Then press any button, the LED illuminates for 1 second if installed correctly. If the LED fails to illuminate, check to make sure you have installed the battery to the correct polarity.

Controller Panel Instruction

1 . On-Off Button
2 . Green Only button
3 . motor pause key
4 . Red and green button
5 . Red Only button
6 . Auto shutdown button

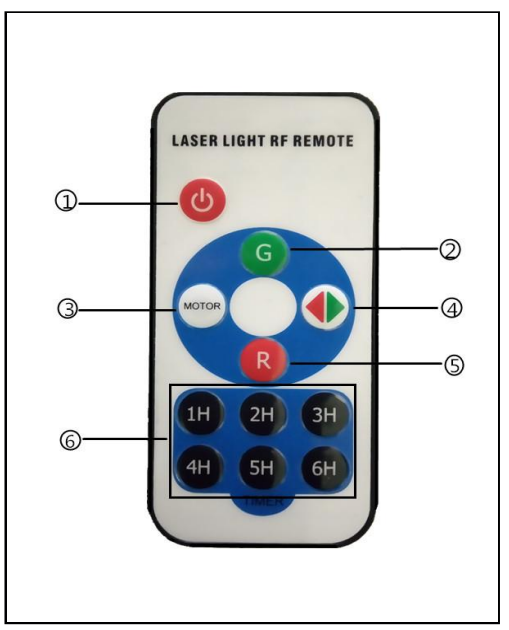

FCC Statement
This device complies with Part 15 of the FCC rules. Operation is subject to the following two conditions: 1) this device may not cause harmful interference, and 2) this device must accept any interference received, including interference that may cause undesired operation.
Note: This equipment has been tested and found to comply with the limits for a Class B digital device, pursuant to part 15 of the FCC Rules. These limits are designed to provide reasonable protection against harmful interference in a residential installation. This equipment generates uses and can radiate radio frequency energy and, if not installed and used in accordance with the instructions, may cause harmful interference to radio communications. However, there is no guarantee that interference will not occur in particular installation. If this equipment does cause harmful interference to radio or television reception, which can be determined by turning the equipment off and on, the user is encouraged to try to correct the interference by one or more of the following measures:
--Reorient or relocate the receiving antenna.
--Increase the separation between the equipment and receiver.
--Connect the equipment into an outlet on a circuit different from that to which the receiver is connected.
--Consult the dealer or an experienced radio/TV technician for help.
Changes or modifications not expressly approved by the party responsible for compliance could void the user's authority to operate the equipment.

This device is measured RF output power is less than the SAR exclusion threshold value for human head and body. Therefore, SAR test is not necessary.