intertek
Total Quality. Assured.

ITEL MOBILE LIMITED

TEST REPORT

SCOPE OF WORK
FCC TESTING– A675L

REPORT NUMBER
251205047SZN-006

ISSUE DATE	**[REVISED DATE]**
Dec. 22, 2025	[----------]

PAGES
101

DOCUMENT CONTROL NUMBER
FCC SAR_b
© 2017 INTERTEK

101, 201, Building B, No. 308 Wuhe Avenue, Zhangkengjing Community,
GuanHu Subdistrict, LongHua District, Shenzhen, P.R. China.

Tel: (86 755) 8601 6288
Fax: (86 755) 8601 6751
www.intertek.com

Total Quality. Assured.
TEST REPORT

Intertek Report No.: 251205047SZN-006

SAR TEST REPORT

Applicant:	ITEL MOBILE LIMITED
Address of Applicant:	FLAT N 16/F BLOCK B UNIVERSAL INDUSTRIAL CENTRE 19-25 SHAN MEI STREET FOTAN NT HONGKONG
Equipment Under Test (EUT)	
Product Name:	Mobile Phone
Model No.:	A675L
Trademark	itel
FCC ID:	2AJMN-A675L
Applicable standards:	FCC 47 CFR Part 2.1093
Date of Test:	Dec. 05, 2025 ~ Dec. 22, 2025
Test Result:	PASS

Prepared and Checked by:

Bruce

Bruce Zheng
Project Engineer

Approved by:

Damon

Damon Wang
Team Leader
Date: Dec. 22, 2025

- This report is for the exclusive use of Intertek's Client and is provided pursuant to the agreement between Intertek and its Client. Intertek's responsibility and liability are limited to the terms and conditions of the agreement. Intertek assumes no liability to any party, other than to the Client in accordance with the agreement, for any loss, expense or damage occasioned by the use of this report. Only the Client is authorized to copy or distribute this report. Any use of the Intertek name or one of its marks for the sale or advertisement of the tested material, product or service must first be approved in writing by Intertek. The observations and test results referenced from this report are relevant only to the sample tested. This report by itself does not imply that the material, product, or service is or has ever been under an Intertek certification program.
- The test report only allows to be revised only within the report defined retention period unless further standard or the requirement was noticed

1. VERSION

Report No.	Version No.	Description	Issued Date
251205047SZN-006	*01*	*Original*	*Dec. 22, 2025*

2. CONTENTS

1. VERSION 2
2. CONTENTS 3
3. SAR RESULTS SUMMARY 4
4. GENERAL INFORMATION 7
5. TEST FACILITY 8
6. GUIDANCE STANDARD 9
7. EXPOSURE POSITIONS CONSIDERATION 10
8. RF EXPOSURE 11
9. SPECIFIC ABSORPTION RATE (SAR) 12
10. SAR MEASUREMENTS SYSTEM CONFIGURATION 13
11. MEASUREMENT PROCEDURES 27
12. TEST RESULTS 36
13. MEASUREMENT UNCERTAINTY 98
14. TEST EQUIPMENT LIST 100
ANNEX A: TEST LAYOUT AND SETUP 101
ANNEX B: SYSTEM CHECK RESULTS 101
ANNEX C: MAXIMUM GRAPH RESULTS 101
ANNEX D: SYSTEM VALIDATION 101
ANNEX E: EUT PHOTO 101
ANNEX F: PROBE CALIBRATION CERTIFICATE 101
ANNEX G: DIPOLE CALIBRATION CERTIFICATE 101
ANNEX H: DAE CALIBRATION CERTIFICATE 101

3. SAR RESULTS SUMMARY

The maximum results of Specific Absorption Rate (SAR) found during test as below:
<Highest Reported standalone SAR Summary>

Exposure Position	Frequency Band	Reported 1-g SAR (W/kg)	Equipment Class	Highest Reported 1-g SAR (W/kg)
Head	GSM 850	0.660	PCE	1.164
	PCS 1900	1.164		
	WCDMA Band II	0.859		
	WCDMA Band IV	0.652		
	WCDMA Band V	0.704		
	LTE Band 2	0.925		
	LTE Band 4	0.837		
	LTE Band 5	0.698		
	LTE Band 7	0.729		
	LTE Band 12	0.410		
	LTE Band 17	0.465		
	LTE Band 26	0.733		
	LTE Band 38	0.513		
	LTE Band 41	0.413		
	LTE Band 66	0.528		
	WLAN 2.4 GHz	0.333	DTS	
	WLAN 5.2 GHz	0.320	NII	
	WLAN 5.3 GHz	0.352		
	WLAN 5.6 GHz	0.440		
	WLAN 5.8 GHz	0.422		
Body (10 mm Gap)	GSM 850	0.420	PCE	0.557
	PCS 1900	0.428		
	WCDMA Band II	0.200		
	WCDMA Band IV	0.131		
	WCDMA Band V	0.195		
	LTE Band 2	0.252		
	LTE Band 4	0.181		
	LTE Band 5	0.182		
	LTE Band 7	0.097		
	LTE Band 12	0.171		
	LTE Band 17	0.184		
	LTE Band 26	0.200		
	LTE Band 38	0.361		
	LTE Band 41	0.385		
	LTE Band 66	0.147		
	WLAN 2.4 GHz	0.112	DTS	
	WLAN 5.2 GHz	0.248	NII	
	WLAN 5.3 GHz	0.393		
	WLAN 5.6 GHz	0.557		
	WLAN 5.8 GHz	0.494		
Hotspot (10 mm Gap)	GSM 850	0.420	PCE	0.800
	PCS 1900	0.800		
	WCDMA Band II	0.307		
	WCDMA Band IV	0.202		
	WCDMA Band V	0.206		
	LTE Band 2	0.395		

	LTE Band 4	0.295		
	LTE Band 5	0.182		
	LTE Band 7	0.569		
	LTE Band 12	0.171		
	LTE Band 17	0.184		
	LTE Band 26	0.229		
	LTE Band 38	0.361		
	LTE Band 41	0.385		
	LTE Band 66	0.198		
	WLAN 2.4 GHz	0.112	DTS	
	WLAN 5.2 GHz	0.248	NII	
	WLAN 5.8 GHz	0.494		

<Highest Reported simultaneous SAR Summary>

Exposure Position	Frequency Band	Reported 1-g SAR (W/kg)	Equipment Class	Highest Reported Simultaneous Transmission 1-g SAR (W/kg)
Right Tilted	PSC1900	1.164	PCE	1.49
	WLAN 5.2 GHz	0.261	NII	
	Bluetooth	0.066	DSS	

Note:

1. The highest simultaneous transmission is scalar summation of Reported standalone SAR per FCC KDB 690783 D01 v01r03, and scalar SAR summation of all possible simultaneous transmission scenarios are < 1.6W/kg.
2. This device is compliance with Specific Absorption Rate (SAR) for general population/uncontrolled exposure limits (1.6 W/kg) specified in FCC 47 CFR part 2 (2.1093) and ANSI/IEEE C95.1-2005 and had been tested in accordance with the measurement methods and procedures specified in IEEE Std 1528: 2013.
3. For DFS operation type is slaver device without radar detection function, 5.3GHz WLAN and 5.6GHz WLAN do not support hotspot mode.

4. GENERAL INFORMATION

4.1 Client Information

Applicant:	ITEL MOBILE LIMITED
Address of Applicant:	FLAT N 16/F BLOCK B UNIVERSAL INDUSTRIAL CENTRE 19-25 SHAN MEI STREET FOTAN NT HONGKONG
Manufacturer:	ITEL MOBILE LIMITED
Address of Manufacturer:	FLAT N 16/F BLOCK B UNIVERSAL INDUSTRIAL CENTRE 19-25 SHAN MEI STREET FOTAN NT HONGKONG

4.2 General Description of EUT

Product Name:	Mobile Phone			
Model No.:	A675L			
Category of device	Portable device			
Operation Frequency:	GSM:	GSM850: 824.2~848.8 MHz	PCS 1900: 1850.2~1909.8 MHz	
	WCDMA:	Band II: 1852.4~1907.6 MHz	Band V: 826.4~846.6 MHz	
		Band IV: 1712.4~1752.6 MHz		
	LTE:	Band 2:1850MHz~1910MHz	Band 4:1710MHz~1755MHz	
		Band 5:824MHz~849MHz	Band 7: 2500MHz~2570MHz	
		Band 12: 699MHz~716MHz	Band 17: 704MHz~716MHz	
		Band 26:814MHz~849MHz	Band 38: 2570MHz~2620MHz	
		Band 41: 2535MHz~2655MHz	Band 66:1710MHz~1780MHz	
	Wi-Fi:	2412MHz~2462MHz	5150MHz-5250MHz	
		5250MHz-5350MHz	5470MHz-5725MHz	
		5725MHz-5850MHz		
	Bluetooth: 2402 MHz ~ 2480 MHz			
Modulation technology:	GSM:	☒Voice(GMSK)	☒GPRS(GMSK)	☐EGPRS(GMSK, 8PSK)
	WCDMA:	☒RMC(QPSK)	☒HSUPA(QPSK)	☒HSDPA(QPSK,16QAM)
	LTE:	☒QPSK	☒16QAM	☒64QAM
	Wi-Fi:	☒802.11b(DSSS)	☒802.11a/g/n/ac (OFDM)	
	Bluetooth:	☒BR(GFSK)	☒EDR(π/4-DQPSK, 8DPSK)	☒LE(GFSK)
Antenna Type:	Internal Antenna			
Antenna Gain:	GSM 850: -3.93 dBi (declare by Applicant) PCS 1900: -1.05 dBi (declare by Applicant) WCDMA850: -3.93 dBi (declare by Applicant) WCDMA1900: -1.05 dBi (declare by Applicant) WCDMA1700: -2.36 dBi (declare by Applicant) LTE Band 2: -1.05 dBi (declare by Applicant) LTE Band 4: -2.36 dBi (declare by Applicant) LTE Band 5: -3.93 dBi (declare by Applicant) LTE Band 7: -1.09 dBi (declare by Applicant) LTE Band 12: -4.78 dBi (declare by Applicant)			

	LTE Band 17: -4.78 dBi (declare by Applicant) LTE Band 26: -3.93 dBi (declare by Applicant) LTE Band 38: -0.95 dBi (declare by Applicant) LTE Band 41: -0.95 dBi (declare by Applicant) LTE Band 66: -2.08 dBi (declare by Applicant) Bluetooth: -0.58 dBi (declare by Applicant) 2.4G Wi-Fi: -0.58 dBi (declare by Applicant) 5G Wi-Fi: 2.74 dBi (declare by Applicant)	
GPRS Class:	GPRS Class: 12	
DFS Operation Type:	☐ Master Device ☐ Slaver Device with Radar detection function ☒ Slaver Device without Radar detection function	
Dimensions (L*W*H):	168 mm (L)× 78 mm (W)× 10 mm (H)	
Accessories information:	Adapter: Model: U100ISB Input: AC100-240V, 50/60Hz, 0.3A Output: DC 5.0V, 2.0A 10.0W	Battery: Rechargeable Li-ion Battery DC3.85V, 4900mAh Headset: Support headset (shipped without)

4.3 Disclaimer

Disclaimer:
For the information or data provided by the client in this report, the relevant results or conclusions of this report are only made for these data or information. The testing laboratory is not responsible for the authenticity and accuracy of these data or information.

5. TEST FACILITY

Site Description	
EMC Lab.	The Laboratory has been assessed and proved to be in compliance with CNAS/CL01: 2006(identical to ISO/IEC17025: 2005) The Certificate Registration Number is L0327
	Accredited by FCC FCC Designation No.: CN1188 FCC Registration No.: 435976
Name of Firm	Intertek Testing Services Shenzhen Ltd. Longhua Branch
Site Location	101, 201, Building B, No. 308 Wuhe Avenue, Zhangkengjing Community, GuanHu Subdistrict, LongHua District, ShenZhen, P.R. China

6. GUIDANCE STANDARD

The Specific Absorption Rate (SAR) testing specification, method, and procedure for this device is in accordance with the following standards:

☒FCC 47CFR §2.1093 Radiofrequency Radiation Exposure Evaluation: Portable Devices

☒ANSI/IEEE Std. C95.1-1992, "IEEE Standard for Safety Levels with Respect to Human Exposure to Radio Frequency Electromagnetic Fields, 3 kHz to 300 GHz", September 1992

☒IEEE Std 1528™-2013: IEEE Recommended Practice for Determining the Peak Spatial-Average Specific Absorption Rate (SAR) in the Human Head from Wireless Communications Devices: Measurement Techniques.

☒KDB248227 D01 802.11 Wi-Fi SAR v02r02

☒KDB 447498 D01 General RF Exposure Guidance v06

☒KDB 648474 D04 Handset SAR v01r03

☒KDB 865664 D01 SAR measurement 100 MHz to 6 GHz v01r04

☒KDB 865664 D02 RF Exposure Reporting v01r02

☒KDB 941225 D01 SAR test for 3G Devices v03r01

☒KDB 941225 D05 SAR for LTE Devices v02r05

7. EXPOSURE POSITIONS CONSIDERATION

EUT Antenna Locations

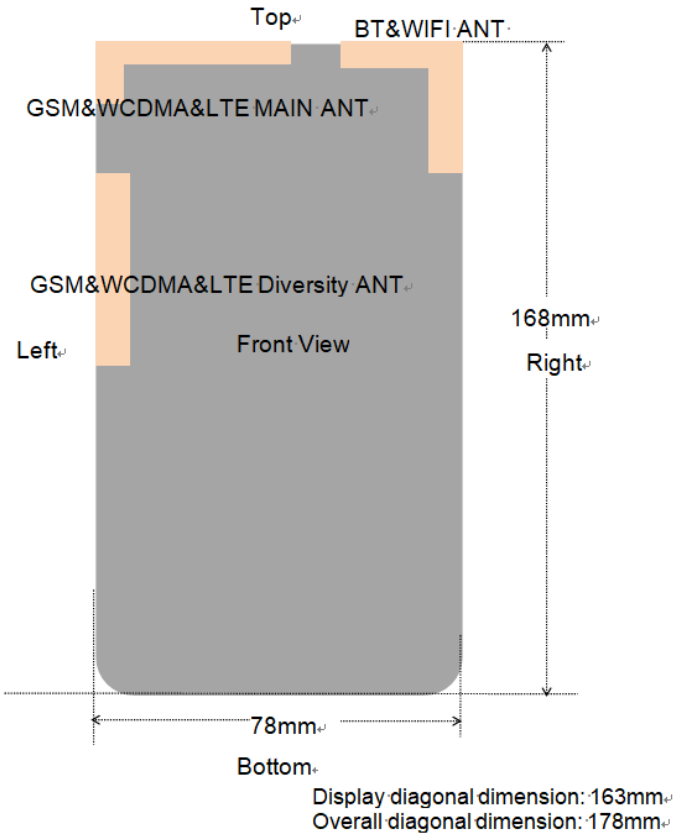

Test position consideration:

Distance of EUT antenna-to-edge/surface(mm), Test distance:10mm						
Antennas	**Back**	**Front**	**Top Side**	**Bottom Side**	**Right Side**	**Left Side**
GSM&WCDMA&LTE MAIN ANT	<25mm	<25mm	<25mm	148mm	31mm	<25mm
BT&WIFI ANT	<25mm	<25mm	<25mm	130mm	<25mm	48mm
SAR Test Requirement (Antenna-to-edge/surface distance ≤25mm)						
Antennas	**Back**	**Front**	**Top Side**	**Bottom Side**	**Right Side**	**Left Side**
GSM&WCDMA&LTE MAIN ANT	Yes	Yes	Yes	No	No	Yes
BT&WIFI ANT	Yes	Yes	Yes	No	Yes	No

Note:

1. Head/Body-worn/Hotspot mode SAR assessments are required.
2. Referring to KDB 941225 D06 v02r01, when the overall device length and width are ≥ 9cm * 5cm, the test distance is 10mm. SAR must be measured for all sides and surfaces with a transmitting antenna located within 25mm from that surface or edge.
3. Per KDB 447498 D01v06, for handsets the test separation distance is determined by the smallest distance between the outer surface of the device and the user, which is 0 mm for head SAR, 10 mm for hotspot SAR, and 10 mm for body-worn SAR.
4. Per KDB 648474 D04 v01r03, when hotspot mode applies, 10-g extremity SAR is required only for the surfaces and edges with hotspot mode 1-g reported SAR > 1.2 W/kg

8. RF EXPOSURE

8.1 Uncontrolled Environment

Uncontrolled Environments are defined as locations where there is the exposure of individuals who have no knowledge or control of their exposure. The general population/uncontrolled exposure limits are applicable to situations in which the general public may be exposed or in which persons who are exposed as a consequence of their employment may not be made fully aware of the potential for exposure or cannot exercise control over their exposure. Members of the general public would come under this category when exposure is not employment-related; for example, in the case of a wireless transmitter that exposes persons in its vicinity.

8.2 Controlled Environment

Controlled Environments are defined as locations where there is exposure that may be incurred by persons who are aware of the potential for exposure, (i.e. as a result of employment or occupation). In general, occupational/controlled exposure limits are applicable to situations in which persons are exposed as a consequence of their employment, who have been made fully aware of the potential for exposure and can exercise control over their exposure. This exposure category is also applicable when the exposure is of a transient nature due to incidental passage through a location where the exposure levels may be higher than the general population/uncontrolled limits, but the exposed person is fully aware of the potential for exposure and can exercise control over his or her exposure by leaving the area or by some other appropriate means.

8.3 RF Exposure Limits

SAR Human Exposure Specified in ANSI/IEEE C95.1-1992 and Health Canada Safety Code 6

HUMAN EXPOSURE LIMITS		
	UNCONTROLLED ENVIRONMENT *General Population* (W/kg) or (mW/g)	CONTROLLED ENVIRONMENT *Occupational* (W/kg) or (mW/g)
SPATIAL PEAK SAR Brain	1.6	8.0
SPATIAL AVERAGE SAR Whole Body	0.08	0.4
SPATIAL PEAK SAR Hands, Feet, Ankles, Wrists	4.0	20

Note:

1. The Spatial Peak value of the SAR averaged over any 1 gram of tissue (defined as a tissue volume in the shape of a cube) and over the appropriate averaging time.
2. The Spatial Average value of the SAR averaged over the whole body.
3. The Spatial Peak value of the SAR averaged over any 10 grams of tissue (defined as a tissue volume in the shape of a cube) and over the appropriate averaging time.

9. SPECIFIC ABSORPTION RATE (SAR)

9.1 INTRODUCTION

SAR is related to the rate at which energy is absorbed per unit mass in an object exposed to a radio field. The SAR distribution in a biological body is complicated and is usually carried out by experimental techniques or numerical modeling. The standard recommends limits for two tiers of groups, occupational/controlled and general population/uncontrolled, based on a person's awareness and ability to exercise control over his or her exposure. In general, occupational/controlled exposure limits are higher than the limits for general population/uncontrolled.

9.2 SAR DEFINITION

The SAR definition is the time derivative (rate) of the incremental energy (dW) absorbed by (dissipated in) an incremental mass (dm) contained in a volume element (dv) of a given density (ρ). The equation description is as below:

$$SAR = \frac{d}{dt}\left(\frac{dW}{dm}\right) = \frac{d}{dt}\left(\frac{dW}{\rho dv}\right)$$

SAR is expressed in units of Watts per kilogram (W/kg)
SAR measurement can be either related to the temperature elevation in tissue by

$$SAR = c\left(\frac{\delta T}{\delta t}\right)$$

Where: C is the specific head capacity, δT is the temperature rise and δt is the exposure duration, or related to the electrical field in the tissue by

$$SAR = \frac{\sigma |E|^2}{\rho}$$

Where: σ is the conductivity of the tissue ρ is the mass density of tissue and E is the RMS electrical field strength.

However for evaluating SAR of low power transmitter, electrical field measurement is typically applied.

10. SAR MEASUREMENTS SYSTEM CONFIGURATION

10.1 SAR MEASUREMENT SYSTEM

The DASY5 system for performing compliance tests consists of the following items:

- A standard high precision 6-axis robot (Stäubli TX=RX family) with controller, teach pendant and software. An arm extension for accommodating the data acquisition electronics (DAE).
- An isotropic field probe optimized and calibrated for the targeted measurement.
- A data acquisition electronics (DAE) which performs the signal amplification, signal multiplexing, AD-conversion, offset measurements, mechanical surface detection, collision detection, etc. The unit is battery powered with standard or rechargeable batteries. The signal is optically transmitted to the EOC.
- The Electro-optical converter (EOC) performs the conversion from optical to electrical signals for the digital communication to the DAE. To use optical surface detection, a special version of the EOC is required. The EOC signal is transmitted to the measurement server.
- The function of the measurement server is to perform the time critical tasks such as signal filtering, control of the robot operation and fast movement interrupts.
- The Light Beam used is for probe alignment. This improves the (absolute) accuracy of the probe positioning.
- A computer running Win 7 profesional operating system and the DASY5 software.
- Remote control and teach pendant as well as additional circuitry for robot safety such as warning lamps, etc.
- The phantom, the device holder and other accessories according to the targeted measurement.

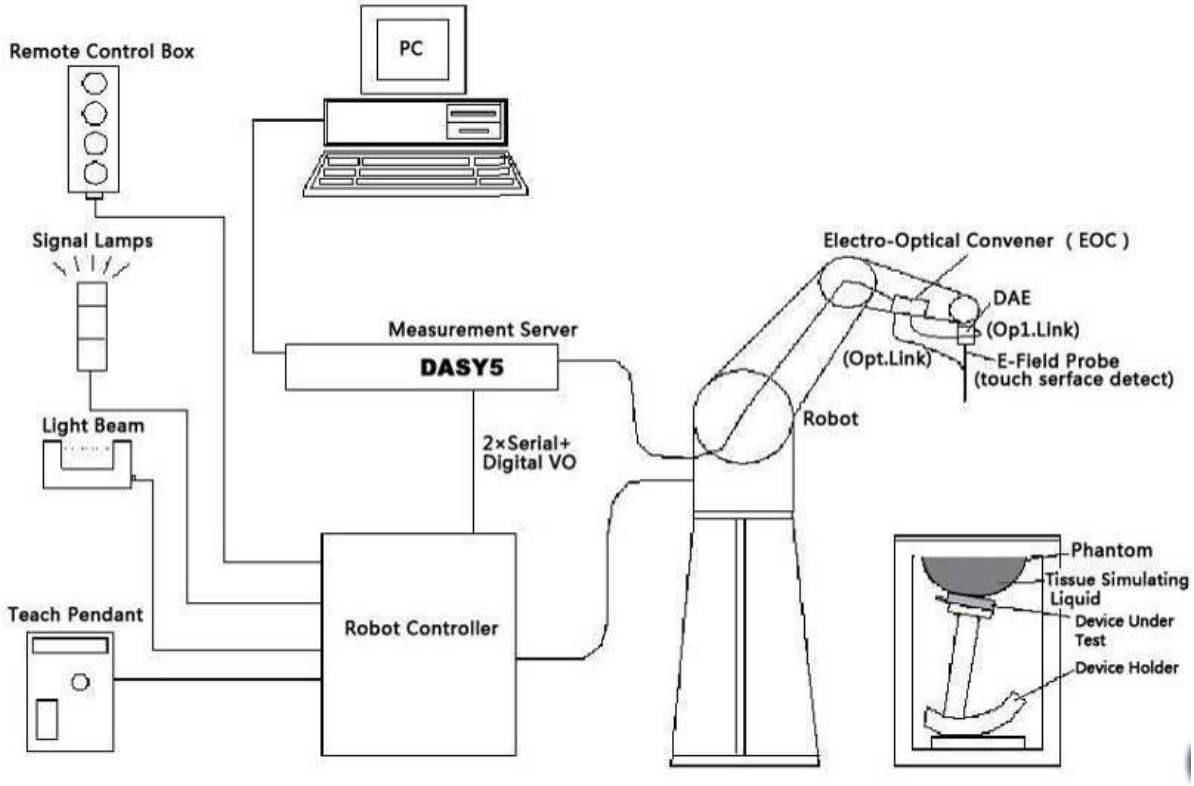

Picture 1. SAR Lab Test Measurement Set-up

10.2 DASY5 E-FIELD PROBE SYSTEM

The SAR measurements were conducted with the dosimetric probe designed in the classical triangular configuration and optimized for dosimetric evaluation. The probe is constructed using the thick film technique; with printed resistive lines on ceramic substrates. The probe is equipped with an optical multifiber line ending at the front of the probe tip. It is connected to the EOC box on the robot arm and provides an automatic detection of the phantom surface. Half of the fibers are connected to a pulsed infrared transmitter, the other half to a synchronized receiver. As the probe approaches the surface, the reflection from the surface produces a coupling from the transmitting to the receiving fibers. This reflection increases first during the approach, reaches maximum and then decreases. If the probe is flatly touching the surface, the coupling is zero. The distance of the coupling maximum to the surface is independent of the surface reflectivity and largely independent of the surface to probe angle. The DASY5 software reads the reflection turning a software approach and looks for the maximum using 2nd ord curve fitting. The approach is stopped at reaching the maximum.

Probe Specifications:

Model:	EX3DV4
Calibration:	ISO/IEC 17025 calibration service available
Probe Length:	337 mm
Probe Tip Length:	9 mm
Body Diameter:	10 mm
Tip Diameter:	2.5 mm
Application:	High Precision dosimetric measurements in any exposure scenario (e.g., very strong Picture 2 E-field Probe gradient fields).

Picture 2 E-field Probe

10.3 E-FIELD PROBE CALIBRATION

Each E-Probe/Probe Amplifier combination has unique calibration parameters. A TEM cell calibration procedure is conducted to determine the proper amplifier settings to enter in the probe parameters. The amplifier settings are determined for a given frequency by subjecting the probe to a known E-field density (1 mW/cm^2) using an RF Signal generator, TEM cell, and RF Power Meter.

The free space E-field from amplified probe outputs is determined in a test chamber. This calibration can be performed in a TEM cell if the frequency is below 1 GHz and inn a waveguide or other methodologies above 1 GHz for free space. For the free space calibration, the probe is placed in the volumetric center of the cavity and at the proper orientation with the field. The probe is then rotated 360 degrees until the three channels show the maximum reading. The power density readings equate to 1 mw/ cm^2.

E-field temperature correlation calibration is performed in a flat phantom filled with the appropriate simulated brain tissue. The E-field in the medium correlates with the temperature rise in the dielectric medium. For temperature correlation calibration a RF transparent thermistor-based temperature probe is used in conjunction with the E-field probe.

$$SAR = C\frac{\Delta T}{\Delta t}$$

Where:
Δt = Exposure time (30 seconds),
C = Heat capacity of tissue (brain or muscle),
ΔT = Temperature increase due to RF exposure.

$$SAR = \frac{|E|^2 \cdot \sigma}{\rho}$$

Where:
σ = Simulated tissue conductivity,
ρ = Tissue density (kg/m^3).

10.4 OTHER TEST EQUIPMENT

10.4.1 Data Acquisition Electronics (DAE)

The data acquisition electronics consist of a highly sensitive electrometer-grade preamplifier with auto-zeroing, a channel and gain-switching multiplexer, a fast 16 bit AD-converter and a command decoder with a control logic unit. Transmission to the measurement server is accomplished through an optical downlink for data and status information, as well as an optical uplink for commands and the clock.

The mechanical probe mounting device includes two different sensor systems for frontal and sideways probe contacts. They are used for mechanical surface detection and probe collision detection.

The input impedance of the DAE is 200 MOhm; the inputs are symmetrical and floating. Common mode rejection is above 80 dB.

Picture 3: DAE

10.4.2 Robot

The SPEAG DASY system uses the high precision robots (DASY5: TX90XL) type from Stäubli SA (France). For the 6-axis controller system, the robot controller version from Stäubli is used. The Stäubli robot series have many features that are important for our application:

- High precision (repeatability 0.02mm)
- High reliability (industrial design)
- Low maintenance costs (virtually maintenance free due to direct drive gears; no belt drives)
- Jerk-free straight movements (brushless synchron motors; no stepper motors)
- Low ELF interference (motor control fields shielded via the closed metallic construction shields)

Picture 4 DASY 5

10.4.3 Measurement Server

The Measurement server is based on a PC/104 CPU broad with CPU (DASY5: 400 MHz, Intel Celeron), chip disk (DASY5: 128MB), RAM (DASY5: 128MB). The necessary circuits for communication with the DAE electronic box, as well as the 16 bit AD converter system for optical detection and digital I/O interface are contained on the DASY I/O broad, which is directly connected to the PC/104 bus of the CPU broad.

Picture 5 Server for DASY 5

The measurement server performs all real-time data evaluation of field measurements and surface detection, controls robot movements and handles safety operation. The PC operating system cannot interfere with these time critical processes. All connections are supervised by a watchdog, and disconnection of any of the cables to the measurement server will automatically disarm the robot and disable all program-controlled robot movements. Furthermore, the measurement server is equipped with an expansion port which is reserved for future applications. Please note that this expansion port does not have a standardized pinout, and therefore only devices provided by SPEAG can be connected. Devices from any other supplier could seriously damage the measurement server.

10.4.4 Device Holder for Phantom

The SAR in the phantom is approximately inversely proportional to the square of the distance between the source and the liquid surface. For a source at 5mm distance, a positioning uncertainty of ±0.5mm would produce a SAR uncertainty of ±20%. Accurate device positioning is therefore crucial for accurate and repeatable measurements. The positions in which the devices must be measured are defined by the standards.

The DASY device holder is designed to cope with the different positions given in the standard. It has two scales for device rotation (with respect to the body axis) and device inclination (with respect to the line between the ear reference points). The rotation centers for both scales are the ear reference point (ERP). Thus the device needs no repositioning when changing the angles.

The DASY device holder is constructed of low-loss POM material having the following dielectric parameters: relative permittivity ε =3 and loss tangent δ =0.02. The amount of dielectric material has been reduced in the closest vicinity of the device, since measurements have suggested that the influence of the clamp on the test results could thus be lowered.

<Laptop Extension Kit>

The extension is lightweight and made of POM, acrylic glass and foam. It fits easily on the upper part of the Mounting Device in place of the phone positioner. The extension is fully compatible with the Twin-SAM and ELI phantoms.

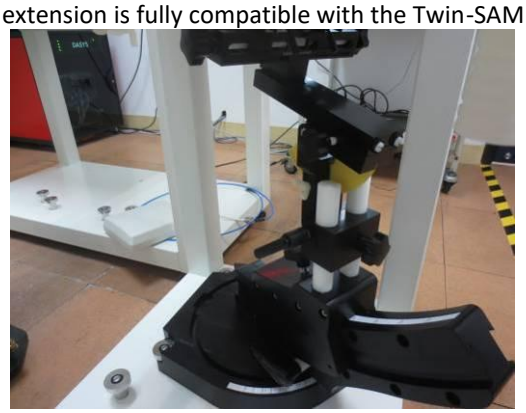

Picture 6: Device Holder

10.4.5 Phantom

The SAM Twin Phantom V4.0 is constructed of a fiberglass shell integrated in a table. The shape of the shell is based on data from an anatomical study designed to Represent the 90th percentile of the population. The phantom enables the dissymmetric evaluation of SAR for both left and right handed handset usage, as well as body-worn usage using the flat phantom region. Reference markings on the Phantom allow the complete setup of all predefined phantom positions and measurement grids by manually teaching three points in the robot. The shell phantom has a 2mm shell thickness (except the ear region where shell thickness increases to 6 mm).

Shell Thickness: 2 ± 0. 2 mm
Filling Volume: Approx. 25 liters
Dimensions: 810 x l000 x 500 mm (H x L x W)
Available: Special

Picture 7: SAM Twin Phantom

Phantom for compliance testing of handheld and body-mounted wireless devices in the frequency range of 30 MHz to 6 GHz. ELI is fully compatible with the IEC 62209-2 standard and all known tissue simulating liquids. ELI has been optimized regarding its performance and can be integrated into our standard phantom tables. A cover prevents evaporation of the liquid. Reference markings on the phantom allow installation of the complete setup, including all predefined phantom positions and measurement grids, by teaching three points. The phantom is compatible with all SPEAG dosimetric probes and dipoles.

Shell Thickness: 2±0.2 mm
Filling Volume: Approx. 30 liters
Dimensions: 190×600×0 mm (H x L x W)

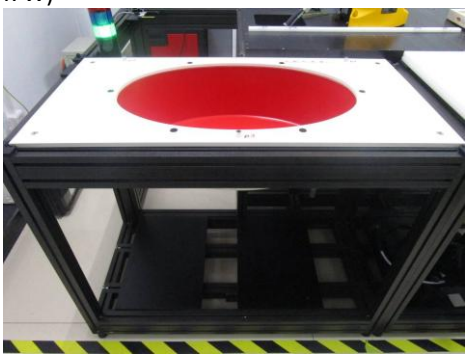

Picture 8.ELI Phantom

10.5 SCANNING PROCEDURE

The DASY5 installation includes predefined files with recommended procedures for measurements and validation. They are read-only document files and destined as fully defined but unmeasured masks. All test positions (head or body-worn) are tested with the same configuration of test steps differing only in the grid definition for the different test positions.

The “reference” and “drift” measurements are located at the beginning and end of the batch process. They measure the field drift at one single point in the liquid over the complete procedure. The indicated drift is mainly the variation of the DUT’s output power and should vary max. ± 5 %.

The “surface check” measurement tests the optical surface detection system of the DASY5 system by repeatedly detecting the surface with the optical and mechanical surface detector and comparing the results. The output gives the detecting heights of both systems, the difference between the two systems and the standard deviation of the detection repeatability. Air bubbles or refraction in the liquid due to separation of the sugar-water mixture gives poor repeatability (above ± 0.1mm). To prevent wrong results tests are only executed when the liquid is free of air bubbles. The difference between the optical surface detection and the actual surface depends on the probe and is specified with each probe. (It does not depend on the surface reflectivity or the probe angle to the surface within ± 30°.)

Area Scan

The Area Scan is used as a fast scan in two dimensions to find the area of high field values before running a detailed measurement around the hot spot. Before starting the area scan a grid spacing is set according to FCC KDB Publication 865664. During scan the distance of the probe to the phantom remains unchanged. After finishing area scan, the field maxima within a range of 2 dB will be ascertained.

Zoom Scan

After the maximum interpolated values were calculated between the points in the cube, the SAR was averaged over the spatial volume (1g or 10g) using a 3D-Spline interpolation algorithm. The 3D-spline is composed of three one-dimensional splines with the “Not a knot” condition (in x, y, and z directions). The volume was then integrated with the trapezoidal algorithm.

Spatial Peak Detection

The procedure for spatial peak SAR evaluation has been implemented and can determine values of masses of 1g and 10g, as well as for user-specific masses. The DASY5 system allows evaluations that combine measured data and robot positions, such as:

- maximum search
- extrapolation
- boundary correction
- peak search for averaged SAR

During a maximum search, global and local maxima searches are automatically performed in 2-D after each Area Scan measurement with at least 6 measurement points. It is based on the evaluation of the local SAR gradient calculated by the Quadratic Shepard’s method. The algorithm will find the global maximum and all local maxima within -2 dB of the global maxima for all SAR distributions.

Extrapolation routines are used to obtain SAR values between the lowest measurement points and the inner phantom surface. The extrapolation distance is determined by the surface detection distance and the probe sensor offset. Several measurements at different distances are necessary for the extrapolation. Extrapolation routines require at least 10 measurement points in 3-D space.

They are used in the Zoom Scan to obtain SAR values between the lowest measurement points and the inner phantom surface. The routine uses the modified Quadratic Shepard's method for extrapolation.

A Z-axis scan measures the total SAR value at the x-and y-position of the maximum SAR value found during the cube scan. The probe is moved away in z-direction from the bottom of the SAM phantom in 5mm steps.

Table 1: Area and Zoom Scan Resolutions per FCC KDB Publication 865664 D01

Frequency	Maximum Area Scan Resolution (mm) (Δxarea, Δyarea)	Maximum Zoom Scan Resolution (mm) (Δxzoom, Δyzoom)	Maximum Zoom Scan Spatial Resolution (mm) Δzzoom(n)	Minimum Zoom Scan Volume (mm) (x,y,z)
≤2 GHz	≤15	≤8	≤5	≥30
2-3 GHz	≤12	≤5	≤5	≥30
3-4 GHz	≤12	≤5	≤4	≥28
4-5 GHz	≤10	≤4	≤3	≥25
5-6 GHz	≤10	≤4	≤2	≥22

10.6 DATA STORAGE AND EVALUATION

10.6.1 Data Storage

The DASY5 software stores the acquired data from the data acquisition electronics as raw data (in microvolt readings from the probe sensors), together with all necessary software parameters for the data evaluation (probe calibration data, liquid parameters and device frequency and modulation data) in measurement files with the extension ".DAE4". The software evaluates the desired unit and format for output each time the data is visualized or exported. This allows verification of the complete software setup even after the measurement and allows correction of incorrect parameter settings. For example, if a measurement has been performed with a wrong crest factor parameter in the device set up, the parameter can be corrected afterwards and the data can be re-evaluated.

The measured data can be visualized or exported in different units or formats, depending on the selected probe type ([V/m], [A/m], [°C], [mW/g], [mW/cm²], [dBrel], etc.). Some of these units are not available in certain situations or show meaningless results, e.g., a SAR output in a loss less media will always be zero. Raw data can also be exported to perform the evaluation with other software packages.

10.6.2 Data Evaluation by SEMCAD

The SEMCAD software automatically executes the following procedures to calculate the field units from the microvolt readings at the probe connector. The parameters used in the evaluation are stored in the configuration modules of the software:

Probe parameters:
- Sensitivity $Norm_i$, a_{i0}, a_{i1}, a_{i2}
- Conversion factor $ConvF_i$
- Diode compression point Dcp_i

Device parameters:
- Frequency f
- Crest factor cf

Media parameters:
- Conductivity
- Density

These parameters must be set correctly in the software. They can be found in the component documents or they can be imported into the software from the configuration files issued for the DASY5 components. In the direct measuring mode of the multimeter option, the parameters of the actual system setup are used. In the scan visualization and export modes, the parameters stored in the corresponding document files are used.

The first step of the evaluation is a linearization of the filtered input signal to account for the compression characteristics of the detector diode. The compensation depends on the input signal, the diode type and the DC-transmission factor from the diode to the evaluation electronics.

If the exciting field is pulsed, the crest factor of the signal must be known to correctly compensate for peak power. The formula for each channel can be given as:

$$\mathbf{V_i = U_i + U_i^2 \cdot c\,f / dcp_i}$$

With $\mathbf{V_i}$ = compensated signal of channel i (i = x, y, z)
$\mathbf{U_i}$ = input signal of channel i (i = x, y, z)
cf = crest factor of exciting field (DASY parameter)
$\mathbf{dcp_i}$ = diode compression point (DASY parameter)

From the compensated input signals the primary field data for each channel can be evaluated:

E-field probes: $\mathbf{E_i = (V_i / Norm_i \cdot ConvF)^{1/2}}$

H-field probes: $\mathbf{H_i = (V_i)^{1/2} \cdot (a_{i0} + a_{i1} f + a_{i2} f^2) / f}$

With $\mathbf{V_i}$ = compensated signal of channel i (i = x, y, z)
$\mathbf{Norm_i}$ = sensor sensitivity of channel i (i = x, y, z)
[mV/(V/m)2] for E-field Probes
ConvF = sensitivity enhancement in solution
$\mathbf{a_{ij}}$ **=** sensor sensitivity factors for H-field probes
f = carrier frequency [GHz]
$\mathbf{E_i}$ = electric field strength of channel i in V/m
$\mathbf{H_i}$ = magnetic field strength of channel i in A/m

The RSS value of the field components gives the total field strength (Hermitian magnitude):
$\mathbf{E_{tot} = (E_x^2 + E_Y^2 + E_z^2)^{1/2}}$

The primary field data are used to calculate the derived field units.
$\mathbf{SAR = (E_{tot})\ 2 \cdot \sigma / (\rho \cdot 1000)}$
with **SAR** = local specific absorption rate in mW/g
$\mathbf{E_{tot}}$ = total field strength in V/m
σ = conductivity in [mho/m] or [Siemens/m]
ρ = equivalent tissue density in g/cm^3

Note that the density is normally set to 1 (or 1.06), to account for actual brain density rather than the density of the simulation liquid. The power flow density is calculated assuming the excitation field to be a free space field.
$\mathbf{P_{pwe} = E_{tot}^2 / 3770}$ **or** $\mathbf{P_{pwe} = H_{tot}^2 \cdot 37.7}$
with $\mathbf{P_{pwe}}$ = equivalent power density of a plane wave in mW/cm^2
$\mathbf{E_{tot}}$ = total electric field strength in V/m ; $\mathbf{H_{tot}}$ = total magnetic field strength in A/m

10.7 TISSUE-EQUIVALENT LIQUID

10.7.1 Tissue-equivalent Liquid Ingredients

The liquid is consisted of water, salt and Glycol etc. The liquid has previously been proven to be suited for worst-case. The Table 2 & 3 shows the detail solution. It's satisfying the latest tissue dielectric parameters requirements proposed by the KDB 865664 D01.

Table 2: The following recipe(s) were used for Head (H) and Body (B) Tissue-equivalent liquid(s)

Tissue Type	Bactericide	DGBE	HEC	NaCl	Sucrose	Triton X-100	Water	Diethylene Glycol Mono-hexylether
H750	0.2	-	0.2	1.4	57.0	-	41.1	-
H835	0.1	-	1.0	1.4	57.0	-	40.5	-
H900	0.1	-	1.0	1.5	56.5	-	40.9	-
H1450	-	45.5	-	0.7	-	-	53.8	-
H1640	-	45.8	-	0.5	-	-	53.7	-
H1750	-	44.5	-	0.3	-	-	55.2	-
H1800	-	44.9	-	0.2	-	-	54.9	-
H1900	-	44.9	-	0.2	-	-	54.9	-
H2000	-	50	-	-	-	-	50	-
H2300	-	44.9	-	0.1	-	-	55.0	-
H2450	-	45.0	-	0.1	-	-	54.9	-
H2600	-	45.1	-	0.1	-	-	54.8	-
H3500	-	8.0	-	0.2	-	20.0	71.8	-
H5G	-	-	-	-	-	17.2	65.52	17.3
B750	0.2	-	0.2	0.8	48.8	-	50.0	-
B835	0.2	-	0.2	0.9	48.5	-	50.2	-
B900	0.2	-	0.2	0.9	48.2	-	50.5	-
B1450	-	34.0	-	0.3	-	-	65.7	-
B1640	-	32.5	-	0.3	-	-	67.2	-
B1750	-	29.4	-	0.4	-	-	70.2	-
B1800	-	29.5	-	0.4	-	-	70.1	-
B1900	-	29.5	-	0.3	-	-	70.2	-
B2000	-	30.0	-	0.2	-	-	69.8	-
B2300	-	31.0	-	0.1	-	-	68.9	-
B2450	-	31.4	-	0.1	-	-	68.5	-
B2600	-	31.8	-	0.1	-	-	68.1	-
B3500	-	28.8	-	0.1	-	-	71.1	-
B5G	-	-	-	-	-	10.7	78.6	10.7

Table 3: Targets of Tissue Simulating Liquid

Frequency (MHz)	Relative permittivity ε_r	Conductivity (σ) S/m
750	41.9	0.89
835	41.5	0.90
900	41.5	0.97
1750	40.1	1.37
1800	40.0	1.40
1900	40.0	1.40
2000	40.0	1.40
2300	39.5	1.67
2450	39.2	1.80
2600	39.0	1.96
5200	36.0	4.66
5300	35.9	4.76
5500	35.6	4.96
5600	35.5	5.07
5800	35.3	5.27

10.7.2 Tissue-equivalent Liquid Properties

Table 4: Dielectric Performance of Head Tissue Simulating Liquid

Tissue Verification								
Tissue Type	Frequency (MHz)	Conductivity (σ)	Permittivity (εr)	Targeted Conductivity (σ)	Targeted Permittivity (εr)	Tolerance Limit (±5%)		Date
						Deviation Conductivity (σ)	Deviation Permittivity (εr)	
Head	750	0.893	42.34	0.89	41.90	0.34	1.05	12/12/2025
Head	835	0.898	42.225	0.90	41.50	-0.22	1.75	12/15/2025
Head	1750	1.401	40.563	1.37	40.10	2.26	1.15	12/15/2025
Head	1900	1.388	40.386	1.40	40.00	2.26	1.15	12/15/2025
Head	2450	1.888	38.2	1.80	39.20	-0.86	0.97	12/16/2025
Head	2600	2.052	37.629	1.96	39.00	4.89	-2.55	12/17/2025
Head	5200	4.562	34.802	4.66	36.00	4.69	-3.52	12/18/2025
Head	5300	4.645	34.736	4.76	35.90	-2.10	-3.33	12/19/2025
Head	5600	4.93	34.279	5.07	35.50	-2.42	-3.24	12/19/2025
Head	5800	5.124	33.938	5.27	35.30	-2.76	-3.44	12/19/2025

Note:

1. The dielectric properties have been measured using the contact probe method at 22±2°C.
2. Deviation Calculation: The values under "Deviation Conductivity (σ)" and "Deviation Permittivity (εr)" represent the relative percentage difference between the measured and targeted values, calculated as:
   Deviation σ (%) = [(Measured_σ - Targeted_σ) / Targeted_σ] × 100%
   Deviation εr (%) = [(Measured_εr - Targeted_εr) / Targeted_εr] × 100%
3. Tolerance Criteria: The "Tolerance Limit (±5%)" requires that the absolute value of both calculated deviations must be ≤ 5% for the tissue simulating liquid to be considered valid.

10.8 SYSTEM CHECK

10.8.1 Description of System Check

The manufacturer calibrates the probes annually. Dielectric parameters of the tissue simulants were measured every day using the dielectric probe kit and the network analyzer. A system check measurement was made following the determination of the dielectric parameters of the simulant, using the dipole validation kit. A power level of 250 mW was supplied to the dipole antenna, which was placed under the flat section of the twin SAM phantom. The system check results (dielectric parameters and SAR values) are given in the table 5. System check results have to be equal or near the values determined during dipole calibration with the relevant liquids and test system (±10 %). System check is performed regularly on all frequency bands where tests are performed with the DASY5 system.

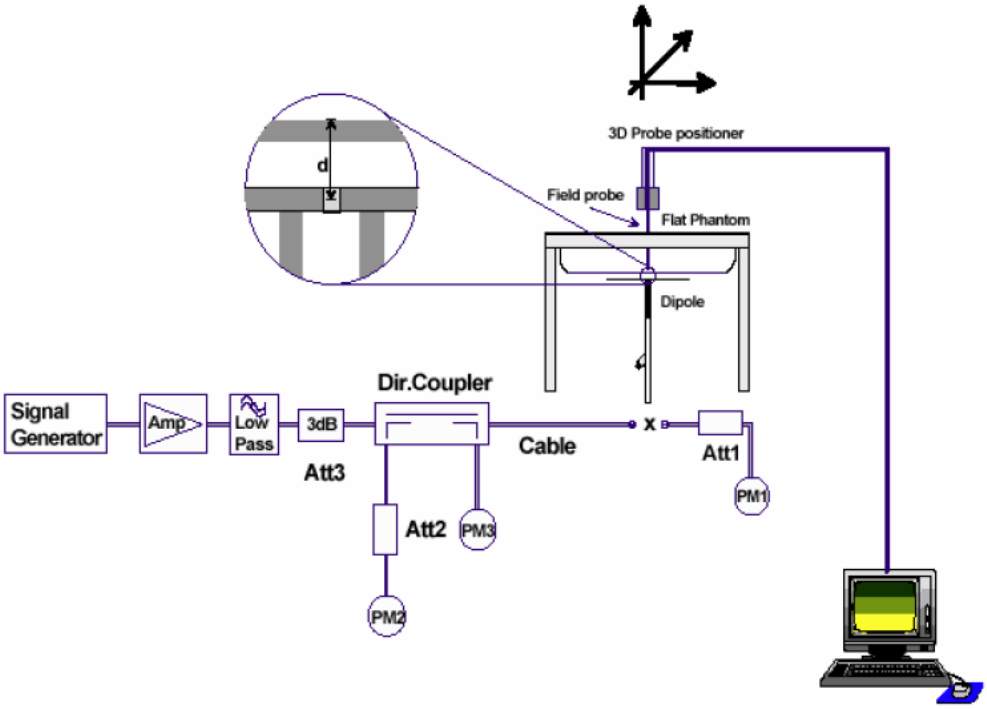

Picture 10. System Check Set-up

Justification for Extended SAR Dipole Calibrations
Usage of SAR dipoles calibrated less than 3 years ago but more than 1 year ago were confirmed in maintaining return loss (< - 20 dB, within 20% of prior calibration) and impedance (within 5 ohm from prior calibration) requirements per extended calibrations in KDB 865664 D01

10.8.2 System Check Results

Table 5: System Check for Simulating Liquid

Frequency (MHz)	Targeted SAR 1g (W/kg)	Measured SAR 1g (W/kg)	Normalized SAR 1g (W/kg)	Tolerance Limit (± 10%) Deviation SAR 1g (%)	Date
750	8.47	2.11	8.44	-0.35	12/12/2025
835	9.56	2.45	9.80	2.51	12/15/2025
1750	36.2	9.11	36.44	0.66	12/15/2025
1900	39.5	9.84	39.36	-0.35	12/15/2025
2450	52.5	12.9	51.60	-1.71	12/16/2025
2600	55.3	13.92	55.68	0.69	12/17/2025
5200	77.6	7.78	77.80	0.26	12/18/2025
5300	78.0	7.8	78.00	0.00	12/19/2025
5600	81.2	8.12	81.20	0.00	12/19/2025
5800	78.7	7.89	78.90	0.25	12/19/2025

Note: Below 5GHz system check input power: 250mW, above 5GHz system check input power: 100mW

11. MEASUREMENT PROCEDURES

11.1 GENERAL DESCRIPTION OF TEST PROCEDURES

A communication link is set up with a System Simulator (SS) by air link, and a call is established. Then EUT is commanded to operate at maximum transmitting power.

Connection to the EUT is established via air interface with CMW500, and the EUT is set to maximum output power. The EUT battery must be fully charged and checked periodically during the test to as certain uniform power output. The antenna connected to the output of the base station simulator shall be placed at least 50 cm away from the EUT. The signal transmitted by the simulator to the antenna feeding point shall be lower than the output power level of the EUT by at least 30 dB.

11.2 MEASUREMENT VARIABILITY

Per FCC KDB Publication 865664 D01, SAR measurement variability was assessed for each frequency band, which was determined by the SAR probe calibration point and tissue-equivalent medium used for the device measurements. When both head and body tissue-equivalent media were required for SAR measurements in a frequency band, the variability measurement procedures were applied to the tissue medium with the highest measured SAR, using the highest measured SAR configuration for that tissue-equivalent medium. These additional measurements were repeated after the completion of all measurements requiring the same head or body tissue-equivalent medium in a frequency band. The test device was returned to ambient conditions (normal room temperature) with the battery fully charged before it was re-mounted on the device holder for the repeated measurement(s) to minimize any unexpected variations in the repeated results.

SAR Measurement Variability was assessed using the following procedures for each frequency band:

1. Repeated measurement is not required when the original highest measured SAR is < 0.80 W/kg; steps 2) through 4) do not apply.
2. When the original highest measured SAR is ≥ 0.80 W/kg, repeat that measurement once.
3. Perform a second repeated measurement only if the ratio of largest to smallest SAR for the original and first repeated measurements is > 1.20 or when the original or repeated measurement is ≥ 1.45 W/kg (~ 10% from the 1-g SAR limit).
4. Perform a third repeated measurement only if the original, first or second repeated measurement is ≥ 1.5 W/kg and the ratio of largest to smallest SAR for the original, first and second repeated measurements is > 1.20.

11.3 Test Positions Requirements

11.3.1 Ear and handset reference point

Picture11 shows the front, back, and side views of the SAM phantom. The center-of-mouth reference point is labeled “M,” the left ear reference point (ERP) is marked “LE,” and the right ERP is marked “RE.” Each ERP is 15 mm along the B-M (back-mouth) line behind the entrance-to-ear-canal (EEC) point, as shown in Picture12.The Reference Plane is defined as passing through the two ear reference points and point M. The line N-F (neck-front), also called the reference pivoting line, is normal to the Reference Plane and perpendicular to both a line passing through RE and LE and the B-M line (see Picture13). Both N-F and B-M lines should be marked on the exterior of the phantom shell to facilitate handset positioning. Posterior to the N-F line the ear shape is a flat surface with 6 mm thickness at each ERP, and forward of the N-F line the ear is truncated, as illustrated in Picture12. The ear truncation is introduced to preclude the ear lobe from interfering with handset tilt, which could lead to unstable positioning at the cheek.

Picture11 Front, back, and side views of SAM twin phantom

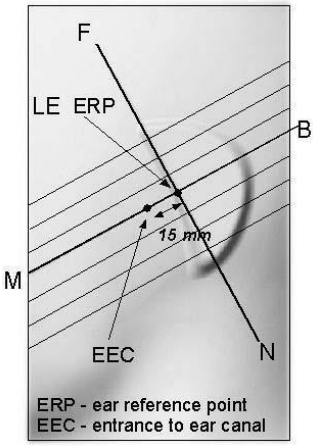

Picture12 Close-up side view of phantom showing the ear region.

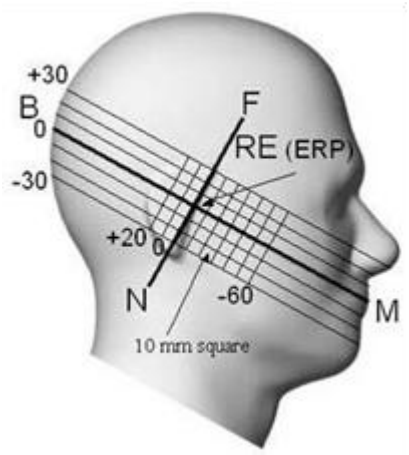

Picture13 Side view of the phantom showing relevant markings and seven cross-sectional plane locations

11.3.2 Definition of the cheek position

1. Ready the handset for talk operation, if necessary. For example, for handsets with a cover piece (flip cover), open the cover. If the handset can transmit with the cover closed, both configurations must be tested.
2. Define two imaginary lines on the handset—the vertical centerline and the horizontal line. The vertical centerline passes through two points on the Phantom Side of the handset—the midpoint of the width wt of the handset at the level of the acoustic output (point A in Picture 14 and Picture 15), and the midpoint of the width wb of the bottom of the handset (point B). The horizontal line is perpendicular to the vertical centerline and passes through the center of the acoustic output (see Picture 14). The two lines intersect at point A. Note that for many handsets, point A coincides with the center of the acoustic output; however, the acoustic output may be located elsewhere on the horizontal line. Also note that the vertical centerline is not necessarily parallel to the front face of the handset (see Picture 15), especially for clamshell handsets, handsets with flip covers, and other irregularly-shaped handsets.
3. Position the handset close to the surface of the phantom such that point A is on the (virtual) extension of the line passing through points RE and LE on the phantom (see Picture 16), such that the plane defined by the vertical centerline and the horizontal line of the handset is approximately parallel to the sagittal plane of the phantom.
4. Translate the handset towards the phantom along the line passing through RE and LE until handset point A touches the pinna at the ERP.
5. While maintaining the handset in this plane, rotate it around the LE-RE line until the vertical centerline is in the plane normal to the plane containing B-M and N-F lines, i.e., the Reference Plane.
6. Rotate the handset around the vertical centerline until the handset (horizontal line) is parallel to the N-F line.
7. While maintaining the vertical centerline in the Reference Plane, keeping point A on the line passing through RE and LE, and maintaining the handset contact with the pinna, rotate the handset about the N-F line until any point on the handset is in contact with a phantom point below the pinna on the cheek. See Picture 16. The actual rotation angles should be documented in the test report.

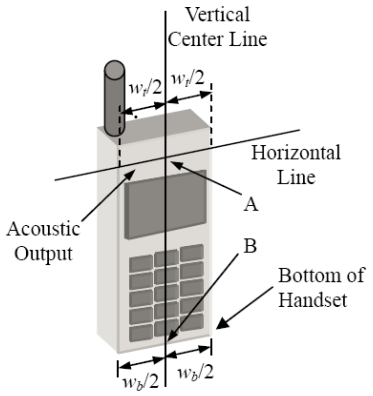

Picture14 Handset vertical and horizontal reference lines—“fixed case

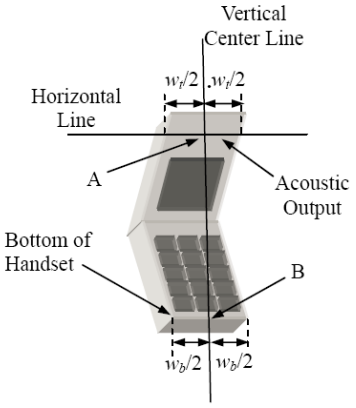

Picture15 Handset vertical and horizontal reference lines—“clam-shell case”

Picture16 cheek or touch position. The reference points for the right ear (RE), left ear (LE), and mouth (M), which establish the Reference Plane for handset positioning, are indicated.

11.3.3 Definition of the tilt position

1. Ready the handset for talk operation, if necessary. For example, for handsets with a cover piece (flip cover), open the cover. If the handset can transmit with the cover closed, both configurations must be tested.
2. While maintaining the orientation of the handset, move the handset away from the pinna along the line passing through RE and LE far enough to allow a rotation of the handset away from the cheek by 15°.
3. Rotate the handset around the horizontal line by 15°.
4. While maintaining the orientation of the handset, move the handset towards the phantom on the line passing through RE and LE until any part of the handset touches the ear. The tilt position is obtained when the contact point is on the pinna. See Picture 17. If contact occurs at any location other than the pinna, e.g., the antenna at the back of the phantom head, the angle of the handset should be reduced. In this case, the tilt position is obtained if any point on the handset is in contact with the pinna and a second point

Picture17 Tilt position. The reference points for the right ear (RE), left ear (LE), and mouth (M), which define the Reference Plane for handset positioning, are indicated.

11.3.4 Body Worn Accessory

Body-worn operating configurations are tested with the belt-clips and holsters attached to the device and positioned against a flat phantom in a normal use configuration (see Picture 18). Per KDB 648474 D04v01r02, body-worn accessory exposure is typically related to voice mode operations when handsets are carried in body-worn accessories. The body-worn accessory procedures in FCC KDB 447498 D01v05r02 should be used to test for body-worn accessory SAR compliance, without a headset connected to it. This enables the test results for such configuration to be compatible with that required for hotspot mode when the body-worn accessory test separation distance is greater than or equal to that required for hotspot mode, when applicable. When the reported SAR for body-worn accessory, measured without a headset connected to the handset is < 1.2 W/kg, the highest reported SAR configuration for that wireless mode and frequency band should be repeated for that body-worn accessory with a handset attached to the handset.

Accessories for body-worn operation configurations are divided into two categories: those that do not contain metallic components and those that do contain metallic components and those that do contain metallic components. When multiple accessories that do not contain metallic components are supplied with the device, the device is tested with only the accessory that dictates the closest spacing to the body. Then multiple accessories that contain metallic components are test with the device with each accessory. If multiple accessories share an identical metallic component (i.e. the same metallic belt-chip used with different holsters with no other metallic components) only the accessory that dictates the closest spacing to the body is tested.

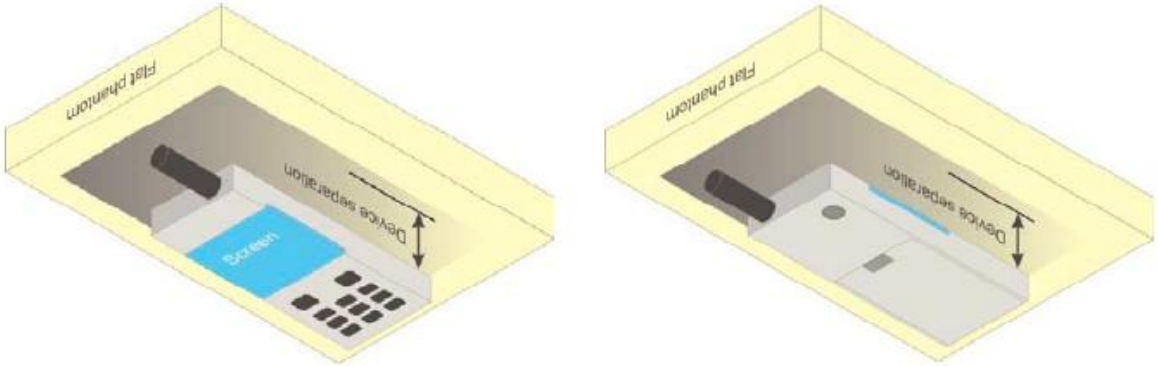

Picture18 Body Worn Position

11.3.5 Wireless Router

Some battery-operated handsets have the capability to transmit and receive user through simultaneous transmission of WIFI simultaneously with a separate licensed transmitter. The FCC has provided guidance in FCC KDB Publication 941225 D06v01r01 where SAR test considerations for handsets (L x W ≥ 9 cm x 5 cm) are based on a composite test separation distance of 10mm from the front, back and edges of the device containing transmitting antennas within 2.5cm of their edges, determined form general mixed use conditions for this type of devices. Since the hotspot SAR results may overlap with the body-worn accessory SAR requirements, the more conservative configurations can be considered, thus excluding some body-worn accessory SAR tests.

When the user enables the personal wireless router functions for the handset, actual operations include simultaneous transmission of both the WIFI transmitter and another licensed transmitter. Both transmitters often do not transmit at the same transmitting frequency and thus cannot be evaluated for SAR under actual use conditions due to the limitations of the SAR assessment probes. Therefore, SAR must be evaluated for each frequency transmission and mode separately and spatially summed with the WIFI transmitter according to FCC KDB Publication 447498 D01v05r02 publication procedures. The “Portable Hotspot” feature on the handset was NOT activated during SAR assessments, to ensure the SAR measurements were evaluated for a single transmission frequency RF signal at a time.

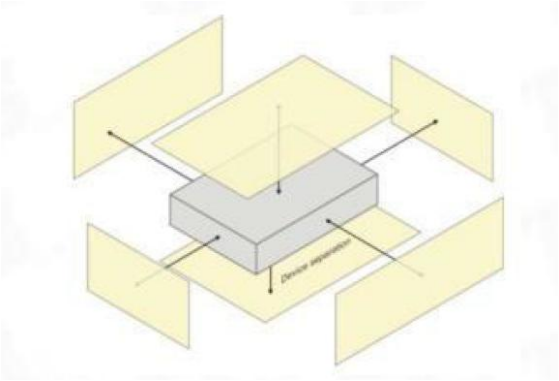

11.4 TEST COFIGURATION

11.4.1 GSM Test Configuration

SAR tests for GSM 850 and GSM 1900, a communication link is set up with a System Simulator (SS) by air link. Using CMW500 the power level is set to “5” for GSM 850, set to “0” for GSM 1900. Since the GPRS class is 12 for this EUT, it has at most 4 timeslots in uplink and at most 4 timeslots in downlink, the maximum total timeslots is 5.

11.4.2 UMTS Test Configuration

11.4.2.1 3G SAR Test Reduction Procedure

In the following procedures, the mode tested for SAR is referred to as the primary mode. The equivalent modes considered for SAR test reduction are denoted as secondary modes. Both primary and secondary modes must be in the same frequency band. When the maximum output power and tune-up tolerance specified for production units in a secondary mode is ≤ ¼ dB higher than the primary mode or when the highest reported SAR of the primary mode is scaled by the ratio of specified maximum output power and tune-up tolerance of secondary to primary mode and the adjusted SAR is ≤ 1.2 W/kg, SAR measurement is not required for the secondary mode.3 This is referred to as the 3G SAR test reduction procedure in the following SAR test guidance, where the primary mode is identified in the applicable wireless mode test procedures and the secondary mode is wireless mode being considered for SAR test reduction by that procedure. When the 3G SAR test reduction procedure is not satisfied, it is identified as “otherwise” in the applicable procedures; SAR measurement is required for the secondary mode.

11.4.2.2 Output power Verification

Maximum output power is verified on the high, middle and low channels according to procedures described in section 5.2 of 3GPP TS 34.121, using the appropriate RMC or AMR with TPC (transmit power control) set to all "1's" for WCDMA/HSDPA or by applying the required inner loop power control procedures to maintain maximum output power while HSUPA is active. Results for all applicable physical channel configurations (DPCCH, DPDCHn and spreading codes, HSDPA, HSPA) are required in the SAR report. All configurations that are not supported by the handset or cannot be measured due to technical or equipment limitations must be clearly identified.

11.4.2.3 Head SAR

SAR for next to the ear head exposure is measured using a 12.2 kbps RMC with TPC bits configured to all "1's". The 3G SAR test reduction procedure is applied to AMR configurations with 12.2 kbps RMC as the primary mode. Otherwise, SAR is measured for 12.2 kbps AMR in 3.4 kbps SRB (signaling radio bearer) using the highest reported SAR configuration in 12.2 kbps RMC for head exposure.

11.4.2.4 Body-Worn Accessory SAR

SAR for body-worn accessory configurations is measured using a 12.2 kbps RMC with TPC bits configured to all "1's". The 3G SAR test reduction procedure is applied to other spreading codes and multiple DPDCHn configurations supported by the handset with 12.2 kbps RMC as the primary mode.

Otherwise, SAR is measured using an applicable RMC configuration with the corresponding spreaing code or DPDCHn, for the highest reported body-worn accessory exposure SAR configuration in 12.2 kbps RMC. When more than 2 DPDCHn are supported by the handset, it may be necessary to configure additional DPDCHn using FTM (Factory Test Mode) or other chipset based test approaches with parameters similar to those used in 384 kbps and 768 kbps RMC.

11.4.3 LTE Test Configuration

This device contains LTE transmitter which follows 3GPP standards, is category 3, supports both QPSK and 16QAM modulations. The output power was tested per 3GPP TS 36.521-1 maximum transmit procedures for both QPSK and 16QAM modulation.

During LTE SAR testing, the related parameters of operating band, channel bandwidth, uplink channel number, modulation type, and RB was set in base station simulator. When the EUT has registered and communicated to base station simulator, the simulator set to make EUT transmitting the maximum radiated power.

11.4.3.1 General

The general test requirements of VoIP support for handsets are described in KDB Publication 648474 D04. The head, body, body-worn accessories and other required test considerations in KDB Publication 447498 D01 and other published RF exposure KDB procedures should be applied to configure LTE devices for standalone and simultaneous transmission in voice and data modes for the required exposure conditions.
Based on the design specifications and other information available from the device manufacturer, typically through measurement and analysis during product development, when the maximum output power specifications for the different RB allocations and RB offset conditions within a channel bandwidth, modulation, or across the channels in a frequency band varies by more than 1 dB, a KDB inquiry is required to determine whether the required test channels are acceptable for SAR testing or if a different set of required test channels should be used. The maximum average conducted output power measured according to the following configurations, for the required test channels, channel bandwidthsand uplink modulations, in each frequency band, are used to support the SAR test reduction and exclusion.
a) 100% RB allocation
b) 1 RB, and also 50% RB allocation, offset to the upper edge, middle, and lower edge of the channel bandwidth of each required test channel
Based on the power measurements, the SAR test reduction and exclusion provisions in KDB Publication 447498 D01 should be applied to determine SAR measurement requirements. SAR is evaluated separately according to the following procedures for the different test positions in each exposure condition – head, body, body-worn accessories, and other use conditions. The configurations and conditions that qualify for SAR test exclusion or require testing must be clearly explained

in the SAR report. The procedures in the following subsections are applied separately to test each LTE frequency band. SAR must be measured with the maximum TTI (transmit time interval) supported by the device in each LTE configuration. The TTI configurations supported and tested must be described in the SAR report.

11.4.3.2 Largest channel bandwidth standalone SAR test requirements

1. QPSK with 1 RB allocation

Start with the largest channel bandwidth then measure SAR for QPSK with 1 RB allocation, using the RB offset and required test channel combination with the highest maximum output power among RB offsets at the upper edge, middle, and lower edge of each required test channel. When the reported SAR is ≤ 0.8 W/kg, testing of the remaining RB offset configurations and required test channels is not required for 1 RB allocation; otherwise, SAR is required for the remaining required test channels and only for the RB offset configuration with the highest output power for that channel.6 When the reported SAR of a required test channel is > 1.45 W/kg, SAR is required for all three RB offset configurations for that required test channel.

2. QPSK with 50% RB allocation

The procedures required for 1 RB allocation in 5.2.1 are applied to measure the SAR for QPSK with 50% RB allocation.

3. QPSK with 100% RB allocation

For QPSK with 100% RB allocation, SAR is not required when the highest maximum output power for 100 % RB allocation is less than the highest maximum output power in 50% and 1 RB allocations, and the highest reported SAR for 1 RB and 50% RB allocation in 5.2.1 and 5.2.2 are ≤ 0.8 W/kg. Otherwise, SAR is measured for the highest output power channel; and if the reported SAR is > 1.45 W/kg, the remaining required test channels must also be tested.

4. Higher order modulations

For each modulation besides QPSK; e.g., 16-QAM, 64-QAM, apply the QPSK procedures in 5.2.1, 5.2.2, and 5.2.3 to determine the QAM configurations that may need SAR measurement. For each configuration identified as required for testing, SAR is required only when the highest maximum output power for the configuration in the higher order modulation is > ½ dB higher than the same configuration in QPSK or when the reported SAR for the QPSK configuration is > 1.45 W/kg.

11.4.3.3 TDD-LTE test configurations

According to KDB 941225 D05, SAR testing for TDD-LTE device must be tested using a fixed periodic duty factoraccording to the highest transmission duty factor implemented for the device and supported by the defined 3GPP TDD-LTE configurations. The TDD-LTE of this device supports frame structure type 2 defined in 3GPP TS 36.211 section 4.2, and the frame structure configuration can be referred to below.

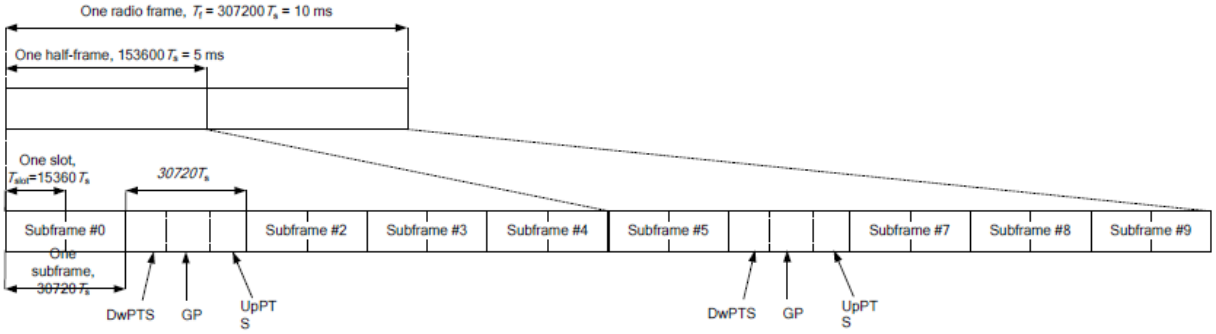

3GPP TS 36.211 Figure 4.2-1: Frame Structure Type 2

Special Subframe Configuration	Normal Cyclic Prefix in Downlink			Extended Cyclic Prefix in Downlink		
	DwPTS	UpPTS		DwPTS	UpPTS	
		Normal Cyclic Prefix in Uplink	Extended Cyclic Prefix in Uplink		Normal Cyclic Prefix in Uplink	Extended Cyclic Prefix in Uplink
0	6592 • Ts	2192 • Ts	2560 • Ts	7680 • Ts	2192 • Ts	2560 • Ts
1	19760 • Ts			20480 • Ts		
2	21952 • Ts			23040 • Ts		
3	24144 • Ts			25600 • Ts		
4	26336 • Ts			7680 • Ts	4384 • Ts	5120 • Ts
5	6592 • Ts	4384 • Ts	5120 • Ts	20480 • Ts		
6	19760 • Ts			23040 • Ts		
7	21952 • Ts			12800 • Ts		
8	24144 • Ts			-	-	-
9	13168 • Ts			-	-	-

3GPP TS 36.211 Table 4.2-1: Configuration of Special Subframe

Uplink-Downlink Configuration	Downlink-to-Uplink Switch-Point Periodicity	Subframe Number									
		0	1	2	3	4	5	6	7	8	9
0	5 ms	D	S	U	U	U	D	S	U	U	U
1	5 ms	D	S	U	U	D	D	S	U	U	D
2	5 ms	D	S	U	D	D	D	S	U	D	D
3	10 ms	D	S	U	U	U	D	D	D	D	D
4	10 ms	D	S	U	U	D	D	D	D	D	D
5	10 ms	D	S	U	D	D	D	D	D	D	D
6	5 ms	D	S	U	U	U	D	S	U	U	D

3GPP TS 36.211 Table 4.2-2: Uplink-Downlink Configurations

The variety of different TD-LTE uplink-downlink configurations allows a network operator to allocate the network's capacity between uplink and downlink traffic to meet the needs of the network. The uplink duty cycle of these seven configurations can readily be computed and shown in below.

UL-DL Configuration	0	1	2	3	4	5	6
Highest Duty-Cycle	63.33%	43.33%	23.33%	31.67%	21.67%	11.67%	53.33%

Considering the highest transmission duty cycle, TDD-LTE was tested using Uplink-Downlink Configuration 0 with 6 uplink subframe and 2 special subframe. The special subframe was set to special subframe configuration 7 using extended cyclic prefix uplink. Therefore, SAR testing for TDD-LTE was performed at the maximum output power with highest transmission duty cycle of 63.33%.

12. TEST RESULTS

12.1 Conducted Power Results

Test Condition:

1. Conducted Measurement
   EUT was set for low, mid, high channel with modulated mode and highest RF output power.
   The base station simulator was connected to the antenna terminal.

2 Conducted Emissions Measurement Uncertainty
All test measurements carried out are traceable to national standards. The uncertainty of the measurement at a confidence level of approximately 95% (in the case where distributions are normal), with a coverage factor of 2, in the range 30MHz – 40GHz is ±1.5dB.

3	Environmental Conditions	Temperature	22°C
		Relative Humidity	55%
		Atmospheric Pressure	1009mbar

Test Procedures:

Mobile Phone radio output power measurement

1. The transmitter output port was connected to base station emulator.
2. Establish communication link between emulator and EUT and set EUT to operate at maximum output power all the time.
3. Select lowest, middle, and highest channels for each band and different possible test mode.
4. Measure the conducted peak burst power and conducted average burst power from EUT antenna port.

Source-based Time Averaged Burst Power Calculation:

For TDMA, the following duty cycle factor was used to calculate the source-based time average power

Number of Time slot	1	2	3	4
Duty Cycle	1:8	1:4	1:2.66	1:2
Duty cycle factor	-9.03 dB	-6.02 dB	-4.26 dB	-3.01 dB
Crest Factor	8	4	2.66	2

Remark: Time slot duty cycle factor = 10 * log (Time Slot Duty Cycle)
Source based time averaged power = Maximum burst averaged power (1 Uplink) – 9.03 dB
Source based time averaged power = Maximum burst averaged power (2 Uplink) – 6.02 dB
Source based time averaged power = Maximum burst averaged power (3 Uplink) – 4.26 dB
Source based time averaged power = Maximum burst averaged power (4 Uplink) – 3.01 dB

12.1.1 GSM

Per KDB 941225 D01 3G SAR Procedures:
SAR test reduction for GPRS and EDGE modes is determined by the source-based time-averaged output power specified for production units, including tune-up tolerance. The data mode with highest specified time-averaged output power should be tested for SAR compliance in the applicable exposure conditions. For modes with the same specified maximum output power and tolerance, the higher number time-slot configuration should be tested.

When different maximum output power applies to GSM voice or GPRS/EDGE time slots, GSM voice and GPRS/EDGE time slots should be tested separately to determine compliance by summing the corresponding reported SAR.

The GMSK EDGE configurations are grouped with GPRS and considered with respect to time-averaged maximum output power to determine compliance

Maximum Output Power for GSM

Band: GSM 850	Burst Conducted Power (dBm)			Frame- Conducted Power(dBm)		
Channel	128	190	251	128	190	251
Frequency (MHz)	824.2	836.6	848.8	824.2	836.6	848.8
GSM (GMSK, Voice)	32.13	**32.37**	32.19	23.10	23.34	23.16
GPRS (GMSK, 1 TX slot)	32.10	32.33	32.15	23.07	23.30	23.12
GPRS (GMSK, 2 TX slots)	30.08	30.36	30.13	24.06	24.34	24.11
GPRS (GMSK, 3 TX slots)	28.41	**28.69**	28.50	24.15	**24.43**	24.24
GPRS (GMSK, 4 TX slots)	26.39	26.67	26.47	23.38	23.66	23.46

Remark:
1. The frame-averaged power is linearly reported the maximum burst averaged power over 8 time slots. The calculated method are shown as below:
   The duty cycle "x" of different time slots as below:
   1 TX slot is 1/8, 2 TX slots is 2/8, 3 TX slots is 3/8 and 4 TX slots is 4/8
   Based on the calculation formula:
   Frame-averaged power = Burst averaged power + 10 1og (x)
   So,
   Frame-averaged power (1 TX slot) = Burst averaged power (1 TX slot)– 9.03
   Frame-averaged power (2 TX slots) = Burst averaged power (2 TX slots)– 6.02
   Frame-averaged power (3 TX slots) = Burst averaged power (3 TX slots)– 4.26
   Frame-averaged power (4 TX slots) = Burst averaged power (4 TX slots) – 3.01
2. CS1 coding scheme was used in GPRS conducted power measurements and SAR testing.

Band: PCS 1900	Burst Conducted Power (dBm)			Frame- Conducted Power(dBm)		
Channel	512	661	810	512	661	810
Frequency (MHz)	1850.2	1880.0	1909.8	1850.2	1880.0	1909.8
GSM (GMSK, Voice)	28.89	**29.11**	28.97	19.86	20.08	19.94
GPRS (GMSK, 1 TX slot)	28.86	29.04	28.91	19.83	20.01	19.88
GPRS (GMSK, 2 TX slots)	26.50	26.92	26.92	20.48	20.90	20.90
GPRS (GMSK, 3 TX slots)	24.95	25.41	**25.45**	20.69	21.15	**21.19**
GPRS (GMSK, 4 TX slots)	22.86	23.39	23.46	19.85	20.38	20.45

Remark:
1. The frame-averaged power is linearly reported the maximum burst averaged power over 8 time slots. The calculated method are shown as below:
   The duty cycle "x" of different time slots as below:
   1 TX slot is 1/8, 2 TX slots is 2/8, 3 TX slots is 3/8 and 4 TX slots is 4/8
   Based on the calculation formula:
   Frame-averaged power = Burst averaged power + 10 1og (x)
   So,
   Frame-averaged power (1 TX slot) = Burst averaged power (1 TX slot)– 9.03
   Frame-averaged power (2 TX slots) = Burst averaged power (2 TX slots)– 6.02

	Frame-averaged power (3 TX slots) = Burst averaged power (3 TX slots)– 4.26 Frame-averaged power (4 TX slots) = Burst averaged power (4 TX slots) – 3.01
2.	CS1 coding scheme was used in GPRS conducted power measurements and SAR testing, MCS5 coding scheme was used in EGPRS conducted power measurements and SAR testing (if necessary).

Note:

1. For Head SAR testing, GSM Voice mode should be evaluated, therefore the EUT was set in PCS 1900 Voice mode.
2. For Body worn SAR testing and Hotspot mode SAR testing, GPRS and EGPRS mode should be evaluated, therefore the EUT was set in GPRS 2 TX slots mode due to the highest frame-averaged power.
3. Per KDB447498 D01v06, the maximum output power channel is used for SAR testing and for further SAR test reduction.

12.1.2 WCDMA Conducted Power

The following tests were conducted according to the test requirements outlines in 3GPP TS 34.121 specification.
A summary of these settings are illustrated below:

HSDPA Setup Configuration:

a. The EUT was connected to Base Station Rohde & Schwarz CMU200 referred to the Setup Configuration.
b. The RF path losses were compensated into the measurements.
c. A call was established between EUT and Base Station with following setting:
   i. Set Gain Factors (β_c and β_d) and parameters were set according to each
   ii. Specific sub-test in the following table, C10.1.4, quoted from the TS 34.121
   iii. Set RMC 12.2kbps + HSDPA mode.
   iv. Set Cell Power = -86 dBm
   v. Set HS-DSCH Configuration Type to FRC (H-set 1, QPSK)
   vi. Select HSDPA Uplink Parameters
   vii. Set Delta ACK, Delta NACK and Delta CQI = 8
   viii. Set Ack-Nack Repetition Factor to 3
   ix. Set CQI Feedback Cycle (k) to 4 ms
   x. Set CQI Repetition Factor to 2
   xi. Power Ctrl Mode = All Up bits
d. The transmitted maximum output power was recorded.

Table 1

Sub-test	β_c	β_d	β_d *(SF)*	β_c/β_d	β_{hs} (1)	CM (dB)(2)
1	2/15	15/15	64	2/15	4/15	0.0
2	12/15(3)	15/15(3)	64	12/15(3)	24/15	1.0
3	15/15	8/15	64	15/8	30/15	1.5
4	15/15	4/15	64	15/4	30/15	1.5

Note 1: Δ_{ACK}, Δ_{NACK} and Δ_{CQI} = 8 ⇔ $A_{hs} = \beta_{hs}/\beta_c = 30/15$ ⇔ $\beta_{hs} = 30/15 * \beta_c$
Note 2: CM = 1 for β_c/β_d =12/15, β_{hs}/β_c=24/15.
Note 3: For subtest 2 the β_c/β_d ratio of 12/15 for the TFC during the measurement period (TF1, TF0) is achieved by setting the signaled gain factors for the reference TFC (TF1, TF1) to β_c = 11/15 and β_d = 15/15.

HSDPA Sub-test setup configuration

HSUPA Setup Configuration:

a. The EUT was connected to Base Station Rohde & Schwarz CMU200 referred to the Setup Configuration.
b. The RF path losses were compensated into the measurements.
c. A call was established between EUT and Base Station with following setting * :
   i. Call Configs = 5.2B, 5.9B, 5.10B, and 5.13.2B with QPSK
   ii. Set the Gain Factors (β_c and β_d) and parameters (AG Index) were set according to each specific sub-test in the following table, C11.1.3, quoted from the TS 34.121
   iii. Set Cell Power = -86 dBm
   iv. Set Channel Type = 12.2k + HSPA
   v. Set UE Target Power
   vi. Power Ctrl Mode= Alternating bits
   vii. Set and observe the E-TFCI
   viii. Confirm that E-TFCI is equal to the target E-TFCI of 75 for sub-test 1, and other subtest's E-TFCI
d. The transmitted maximum output power was recorded.

Table 2

Sub-test	β_c	β_d	β_d (SF)	β_c/β_d	β_{hs} (1)	β_{ec}	β_{ed}	β_{ed} (SF)	β_{ed} (codes)	CM (2) (dB)	MPR (dB)	AG (4) Index	E-TFCI
1	11/15 (3)	15/15 (3)	64	11/15 (3)	22/15	209/225	1039/225	4	1	1.0	0.0	20	75
2	6/15	15/15	64	6/15	12/15	12/15	94/75	4	1	3.0	2.0	12	67
3	15/15	9/15	64	15/9	30/15	30/15	β_{ed1}: 47/15 β_{ed2}: 47/15	4	2	2.0	1.0	15	92
4	2/15	15/15	64	2/15	4/15	2/15	56/75	4	1	3.0	2.0	17	71
5	15/15 (4)	15/15 (4)	64	15/15 (4)	30/15	24/15	134/15	4	1	1.0	0.0	21	81

Note 1: Δ_{ACK}, Δ_{NACK} and Δ_{CQI} = 8 $\Leftrightarrow$ $A_{hs} = \beta_{hs}/\beta_c$ = 30/15 $\Leftrightarrow$ β_{hs}= 30/15 *β_c.
Note 2: CM = 1 for β_c/β_d =12/15, β_{hs}/β_c=24/15. For all other combinations of DPDCH, DPCCH, HS- DPCCH, E-DPDCH and E-DPCCH the MPR is based on the relative CM difference.
Note 3: For subtest 1 the β_c/β_d ratio of 11/15 for the TFC during the measurement period (TF1, TF0) is achieved by setting the signaled gain factors for the reference TFC (TF1, TF1) to β_c = 10/15 and β_d = 15/15.
Note 4: For subtest 5 the β_c/β_d ratio of 15/15 for the TFC during the measurement period (TF1, TF0) is achieved by setting the signaled gain factors for the reference TFC (TF1, TF1) to β_c = 14/15 and β_d = 15/15.
Note 5: Testing UE using E-DPDCH Physical Layer category 1 Sub-test 3 is not required according to TS 25.306 Table 5.1g.
Note 6: β_{ed} cannot be set directly; it is set by Absolute Grant Value.

HSUPA Sub-test setup configuration

WCDMA Conducted Power:

WCDMA Conducted power (dBm)			
Band	WCDMA Band II		
Channel	9262	9400	9538
Frequency (MHz)	1852.4	1880.0	1907.6
AMR 12.2 kbps	21.83	21.91	21.90
RMC 12.2 kbps	21.85	21.92	**21.94**
HSDPA Sub-test 1	21.71	21.91	21.45
HSDPA Sub-test 2	21.44	21.62	21.10
HSDPA Sub-test 3	21.22	21.42	20.84
HSDPA Sub-test 4	21.25	21.46	20.95
HSUPA Sub-test 1	19.49	19.69	19.40
HSUPA Sub-test 2	19.96	20.17	19.87
HSUPA Sub-test 3	19.92	20.03	19.58
HSUPA Sub-test 4	20.02	20.25	19.93
HSUPA Sub-test 5	21.76	21.97	21.45

WCDMA Conducted power (dBm)			
Band	WCDMA Band IV		
Channel	1312	1413	1513
Frequency (MHz)	1712.4	1732.6	1752.6
AMR 12.2 kbps	21.88	21.83	21.76
RMC 12.2 kbps	**21.97**	21.94	21.83
HSDPA Sub-test 1	21.88	21.70	21.67
HSDPA Sub-test 2	21.98	21.80	21.64
HSDPA Sub-test 3	21.90	21.74	21.60
HSDPA Sub-test 4	21.94	21.75	21.62
HSUPA Sub-test 1	21.81	21.68	21.58
HSUPA Sub-test 2	21.90	21.71	21.70
HSUPA Sub-test 3	21.63	21.51	21.45
HSUPA Sub-test 4	21.94	21.72	21.76
HSUPA Sub-test 5	21.96	21.79	21.72

WCDMA Conducted power (dBm)			
Band	WCDMA Band V		
Channel	4132	4183	4233
Frequency (MHz)	826.4	836.6	846.6
AMR 12.2 kbps	22.67	22.77	22.76
RMC 12.2 kbps	22.70	**22.77**	22.76
HSDPA Sub-test 1	22.13	22.09	21.98
HSDPA Sub-test 2	21.84	21.99	21.79
HSDPA Sub-test 3	21.42	21.52	21.27
HSDPA Sub-test 4	21.47	21.57	21.28
HSUPA Sub-test 1	20.30	20.36	20.24
HSUPA Sub-test 2	20.47	20.54	20.33
HSUPA Sub-test 3	20.18	20.27	20.84
HSUPA Sub-test 4	20.03	20.10	19.93
HSUPA Sub-test 5	22.36	22.36	22.33

Note:

1. Applying the subtest setup in Table C.11.1.3 of 3GPP TS 34.121-1
2. Per KDB 941225 D01, RMC 12.2kbps mode is used to evaluate SAR due the highest output power. If AMR 12.2 kbps power is < 0.25dB higher than RMC 12.2kbps, SAR tests with AMR 12.2 kbps can be excluded.
3. AMR, HSDPA RF power will not be larger than RMC 12.2kbps, detailed information is included in Tune-up Procure exhibit.

12.1.3 LTE

LTE QPSK configuration has the highest maximum average output power per 3GPP standard.
SAR measurement is not required for the 16QAM and 64QAM. When the highest maximum output power for 16QAM and 64QAM is ≤ ½ dB higher than the QPSK or when the reported SAR for the QPSK configuration is ≤ 1.45 W/kg.
Please refer to section 3. for LTE detail test channels.

LTE Band 2 part:

LTE Band	Bandwidth (MHz)	Modulation	RB Size	RB Offset	Average Power (dBm)		
					18607	18900	19193
					1850.7MHz	1880.0MHz	1909.3MHz
Band 2	1.4	QPSK	1	0	22.66	22.71	22.73
			1	2	22.64	22.60	22.72
			1	5	22.58	22.67	22.71
			3	0	22.68	22.75	22.54
			3	1	22.63	22.75	22.66
			3	2	22.68	22.72	22.63
			6	0	21.69	21.71	21.66
		16QAM	1	0	22.07	22.50	22.37
			1	2	22.06	22.47	22.28
			1	5	22.03	22.57	22.27
			3	0	21.48	21.73	21.65
			3	1	21.42	21.82	21.66
			3	2	21.42	21.79	21.71
			6	0	20.53	20.89	20.86
		64QAM	1	0	21.46	21.18	21.28
			1	2	21.44	21.22	21.20
			1	5	21.47	21.26	21.27
			3	0	21.88	21.60	21.54
			3	1	21.78	21.62	21.51
			3	2	21.81	21.59	21.58
			6	0	20.41	20.44	20.21
LTE Band	Bandwidth (MHz)	Modulation	RB Size	RB Offset	Average Power (dBm)		
					18615	18900	19185
					1851.5MHz	1880.0MHz	1908.5MHz
Band 2	3	QPSK	1	0	22.57	22.63	22.55
			1	7	22.55	22.66	22.46
			1	14	22.62	22.66	22.45
			8	0	21.80	21.71	21.58
			8	4	21.75	21.74	21.57
			8	7	21.67	21.80	21.66
			15	0	21.80	21.68	21.61
		16QAM	1	0	22.48	22.21	22.34
			1	7	22.46	22.31	22.42

			1	14	22.39	22.33	22.38
			8	0	21.07	21.01	20.83
			8	4	20.92	20.89	20.87
			8	7	21.01	21.08	20.84
			15	0	20.78	20.85	20.66
		64QAM	1	0	22.16	21.66	22.01
			1	7	22.20	21.69	22.04
			1	14	22.14	21.73	22.03
			8	0	20.45	20.40	20.35
			8	4	20.47	20.41	20.34
			8	7	20.42	20.47	20.32
			15	0	20.55	20.79	20.44
LTE Band	Bandwidth (MHz)	Modulation	RB Size	RB Offset	Average Power (dBm)		
					18625	18900	19175
					1852.5MHz	1880.0MHz	1907.5MHz
Band 2	5	QPSK	1	0	22.68	22.71	22.63
			1	12	22.77	22.70	22.58
			1	24	22.82	22.72	22.39
			12	0	21.78	21.79	21.63
			12	6	21.77	21.81	21.73
			12	11	21.83	21.81	21.62
			25	0	21.79	21.61	21.73
		16QAM	1	0	22.44	21.86	22.69
			1	12	22.46	21.91	22.68
			1	24	22.49	21.86	22.46
			12	0	20.80	20.84	20.78
			12	6	20.83	20.78	20.85
			12	11	20.84	20.78	20.86
			25	0	20.76	20.98	20.78
		64QAM	1	0	21.39	21.44	21.56
			1	12	21.29	21.45	21.49
			1	24	21.47	21.50	21.41
			12	0	20.53	20.55	20.39
			12	6	20.51	20.56	20.42
			12	11	20.44	20.56	20.43
			25	0	20.43	20.81	20.52

LTE Band	Bandwidth (MHz)	Modulation	RB Size	RB Offset	Average Power (dBm)		
					18650	18900	19150
					1855.0MHz	1880.0MHz	1905.0MHz
Band 2	10	QPSK	1	0	22.64	22.58	22.76
			1	24	22.75	22.60	22.66
			1	49	22.70	22.65	22.62
			25	0	21.64	21.74	21.79
			25	12	21.75	21.76	21.84
			25	24	21.76	21.77	21.88
			50	0	21.64	21.76	21.82
		16QAM	1	0	22.14	22.27	22.08
			1	24	22.13	22.37	22.13
			1	49	22.10	22.46	22.08
			25	0	20.87	20.81	21.01
			25	12	20.87	20.82	20.98
			25	24	20.89	20.83	21.01
			50	0	20.86	20.86	20.88
		64QAM	1	0	21.54	22.14	21.62
			1	24	21.50	22.05	21.55
			1	49	21.52	22.21	21.45
			25	0	20.55	20.72	20.66
			25	12	20.56	20.74	20.68
			25	24	20.58	20.74	20.62
			50	0	20.62	20.70	20.74

LTE Band	Bandwidth (MHz)	Modulation	RB Size	RB Offset	Average Power (dBm)		
					18675	18900	19125
					1857.5MHz	1880.0MHz	1902.5MHz
Band 2	15	QPSK	1	0	22.65	22.72	22.77
			1	37	22.62	22.66	22.69
			1	74	22.62	22.77	22.63
			36	0	21.65	21.81	21.85
			36	16	21.71	21.82	21.88
			36	35	21.72	21.83	21.92
			75	0	21.71	21.83	21.84
		16QAM	1	0	22.75	22.21	22.85
			1	37	22.73	22.29	22.81
			1	74	22.70	22.40	22.74
			36	0	20.94	20.96	21.00
			36	16	20.90	20.98	21.06
			36	35	20.86	20.89	21.05
			75	0	20.91	20.89	20.91
		64QAM	1	0	21.74	22.05	21.94

			1	37	21.78	22.07	21.89
			1	74	21.83	22.13	21.75
			36	0	20.58	20.81	20.75
			36	16	20.57	20.79	20.69
			36	35	20.58	20.76	20.71
			75	0	20.66	20.65	20.65
LTE Band	Bandwidth (MHz)	Modulation	RB Size	RB Offset	Average Power (dBm)		
					18700	18900	19100
					1860.0MHz	1880.0MHz	1900.0MHz
Band 2	20	QPSK	1	0	22.88	22.79	23.02
			1	49	22.90	22.82	23.08
			1	99	22.81	23.00	22.92
			50	0	21.74	21.77	21.98
			50	24	21.71	21.76	21.91
			50	49	21.73	21.89	21.86
			100	0	21.74	21.82	21.90
		16QAM	1	0	22.98	22.46	23.10
			1	49	22.98	22.46	23.08
			1	99	22.93	22.56	23.08
			50	0	20.88	20.95	20.98
			50	24	20.80	20.95	20.94
			50	49	20.83	20.95	20.97
			100	0	20.91	20.92	21.08
		64QAM	1	0	22.53	21.93	22.63
			1	49	22.57	21.88	22.59
			1	99	22.49	22.08	22.56
			50	0	20.61	20.84	20.72
			50	24	20.58	20.86	20.76
			50	49	20.59	20.85	20.78
			100	0	20.59	20.67	20.74

LTE Band 4 part:

LTE Band	Bandwidth (MHz)	Modulation	RB Size	RB Offset	Average Power (dBm)		
					19957	20175	20393
					1710.7	1732.5	1754.3
Band 4	1.4	QPSK	1	0	22.65	22.52	22.30
			1	2	22.62	22.51	22.19
			1	5	22.57	22.64	22.28
			3	0	22.75	22.51	22.29
			3	1	22.72	22.52	22.36
			3	2	22.81	22.52	22.33
			6	0	21.79	21.57	21.30
		16QAM	1	0	22.43	22.74	22.13
			1	2	22.46	22.20	22.12
			1	5	22.42	22.20	22.10
			3	0	21.76	21.26	20.97
			3	1	21.78	21.24	20.95
			3	2	21.77	21.20	20.93
			6	0	20.83	20.65	20.49
		64QAM	1	0	22.07	21.65	20.72
			1	2	22.04	21.10	20.64
			1	5	22.02	21.12	20.62
			3	0	21.68	21.79	21.27
			3	1	21.49	21.78	21.22
			3	2	21.46	21.83	21.24
			6	0	20.49	20.19	19.94

LTE Band	Bandwidth (MHz)	Modulation	RB Size	RB Offset	Average Power (dBm)		
					19965	20175	20385
					1711.5	1732.5	1753.5
Band 4	3	QPSK	1	0	22.57	22.39	22.22
			1	7	22.59	22.55	22.27
			1	14	22.52	22.52	22.23
			8	0	21.60	21.53	21.32
			8	4	21.72	21.45	21.39
			8	7	21.63	21.47	21.26
			15	0	21.72	21.48	21.41
		16QAM	1	0	22.44	22.74	21.78
			1	7	22.43	22.84	21.81
			1	14	22.30	22.82	21.77
			8	0	20.94	20.75	20.56
			8	4	20.93	20.77	20.52
			8	7	20.78	20.80	20.61
			15	0	20.68	20.66	20.38
		64QAM	1	0	22.08	21.70	21.82
			1	7	22.14	21.73	21.84

			1	14	21.97	21.77	21.81
			8	0	20.39	20.36	20.07
			8	4	20.38	20.36	20.10
			8	7	20.30	20.39	19.97
			15	0	20.51	20.29	20.31
LTE Band	Bandwidth (MHz)	Modulation	RB Size	RB Offset	Average Power (dBm)		
					19975	20175	20375
					1712.5	1732.5	1752.5
Band 4	5	QPSK	1	0	22.77	22.62	22.39
			1	12	22.64	22.70	22.47
			1	24	22.61	22.73	22.31
			12	0	21.77	21.43	21.38
			12	6	21.78	21.47	21.47
			12	11	21.80	21.49	21.45
			25	0	21.68	21.53	21.44
		16QAM	1	0	22.50	22.22	21.67
			1	12	22.39	22.29	21.62
			1	24	22.39	22.35	21.55
			12	0	20.75	20.53	20.48
			12	6	20.73	20.56	20.40
			12	11	20.77	20.55	20.42
			25	0	20.59	20.64	20.53
		64QAM	1	0	21.39	22.09	21.09
			1	12	21.35	22.10	21.20
			1	24	21.35	22.11	21.05
			12	0	20.50	20.56	20.18
			12	6	20.48	20.52	20.31
			12	11	20.43	20.69	20.22
			25	0	20.33	20.37	20.39
LTE Band	Bandwidth (MHz)	Modulation	RB Size	RB Offset	Average Power (dBm)		
					20000	20175	20350
					1715	1732.5	1750
Band 4	10	QPSK	1	0	22.63	22.57	22.42
			1	24	22.54	22.55	22.34
			1	49	22.47	22.70	22.29
			25	0	21.70	21.47	21.42
			25	12	21.72	21.38	21.58
			25	24	21.63	21.48	21.48
			50	0	21.64	21.55	21.40
		16QAM	1	0	22.09	22.18	22.13
			1	24	22.04	22.22	22.05
			1	49	21.86	22.39	21.96
			25	0	20.81	20.71	20.59
			25	12	20.79	20.69	20.52

			25	24	20.86	20.69	20.52
			50	0	20.68	20.60	20.57
		64QAM	1	0	21.52	21.06	21.74
			1	24	21.40	21.21	21.72
			1	49	21.19	21.30	21.58
			25	0	20.51	20.37	20.40
			25	12	20.53	20.40	20.47
			25	24	20.53	20.39	20.37
			50	0	20.45	20.45	20.45
LTE Band	Bandwidth (MHz)	Modulation	RB Size	RB Offset	Average Power (dBm)		
					20025	20175	20325
					1717.5	1732.5	1747.5
Band 4	15	QPSK	1	0	22.58	22.51	22.51
			1	37	22.42	22.60	22.41
			1	74	22.43	22.73	22.32
			36	0	21.54	21.47	21.49
			36	16	21.48	21.54	21.56
			36	35	21.49	21.55	21.58
			75	0	21.56	21.53	21.49
		16QAM	1	0	22.73	22.20	22.22
			1	37	22.49	22.23	22.15
			1	74	22.48	22.34	22.04
			36	0	20.70	20.67	20.73
			36	16	20.72	20.63	20.73
			36	35	20.73	20.56	20.67
			75	0	20.65	20.63	20.67
		64QAM	1	0	21.76	21.18	21.82
			1	37	21.51	21.21	21.81
			1	74	21.52	21.22	21.64
			36	0	20.38	20.42	20.46
			36	16	20.40	20.47	20.51
			36	35	20.40	20.40	20.47
			75	0	20.36	20.36	20.35
LTE Band	Bandwidth (MHz)	Modulation	RB Size	RB Offset	Average Power (dBm)		
					20050	20175	20300
					1720	1732.5	1745
Band 4	20	QPSK	1	0	22.92	22.22	22.92
			1	49	22.62	22.32	22.86
			1	99	22.69	22.49	22.71
			50	0	21.51	21.40	21.65
			50	24	21.54	21.54	21.57
			50	49	21.55	21.50	21.57
			100	0	21.49	21.55	21.58

		16QAM	1	0	22.85	22.31	21.62
			1	49	22.64	22.41	21.65
			1	99	22.71	22.56	21.41
			50	0	20.59	20.69	20.71
			50	24	20.61	20.67	20.77
			50	49	20.62	20.70	20.68
			100	0	20.62	20.59	20.56
		64QAM	1	0	22.42	22.00	21.77
			1	49	22.17	22.11	21.78
			1	99	22.26	22.12	21.72
			50	0	20.39	20.37	20.42
			50	24	20.40	20.32	20.34
			50	49	20.41	20.30	20.37
			100	0	20.37	20.36	20.36

LTE Band 5 part:

LTE Band	Bandwidth (MHz)	Modulation	RB Size	RB Offset	Average Power (dBm)		
					20407	20525	20643
					824.7MHz	836.5MHz	848.3MHz
Band 5	1.4	QPSK	1	0	23.12	23.26	23.18
			1	2	23.13	23.22	23.16
			1	5	23.12	23.27	23.13
			3	0	23.14	23.10	23.11
			3	1	23.10	23.07	23.03
			3	2	23.10	23.09	23.13
			6	0	22.01	22.17	22.10
		16QAM	1	0	23.51	23.47	23.17
			1	2	23.16	22.72	23.55
			1	5	23.15	22.77	23.48
			3	0	21.77	21.77	21.67
			3	1	21.83	21.77	21.75
			3	2	21.82	21.76	21.67
			6	0	21.22	21.24	21.08
		64QAM	1	0	22.78	22.43	21.59
			1	2	22.07	21.71	22.41
			1	5	22.04	21.72	22.32
			3	0	21.83	22.34	22.15
			3	1	21.86	22.22	22.16
			3	2	21.79	22.33	22.15
			6	0	20.67	20.59	20.67

LTE Band	Bandwidth (MHz)	Modulation	RB Size	RB Offset	Average Power (dBm)		
					20415	20525	20635
					825.5MHz	836.5MHz	847.5MHz
Band 5	3	QPSK	1	0	23.04	23.26	23.04
			1	7	23.09	23.13	23.07
			1	14	23.12	23.15	23.07
			8	0	22.13	22.25	22.15
			8	4	22.18	22.12	22.19
			8	7	22.15	22.16	22.13
			15	0	22.12	22.08	22.11
		16QAM	1	0	22.83	23.50	22.81
			1	7	22.83	23.48	22.74
			1	14	22.73	23.36	22.89
			8	0	21.23	21.34	21.35
			8	4	21.26	21.32	21.38
			8	7	21.38	21.21	21.34
			15	0	21.09	21.18	21.06

		64QAM	1	0	22.42	22.37	22.26
			1	7	22.40	22.33	22.26
			1	14	22.35	22.20	22.28
			8	0	20.79	21.00	20.83
			8	4	20.90	20.88	20.77
			8	7	21.12	20.86	20.81
			15	0	20.80	20.88	20.99
LTE Band	Bandwidth (MHz)	Modulation	RB Size	RB Offset	Average Power (dBm)		
					20425	20525	20625
					826.5MHz	836.5MHz	846.5MHz
Band 5	5	QPSK	1	0	23.05	23.29	23.11
			1	12	23.14	23.23	23.11
			1	24	23.08	23.27	23.04
			12	0	22.07	22.14	22.20
			12	6	22.09	22.17	22.29
			12	11	22.11	22.18	22.31
			25	0	22.17	22.09	22.24
		16QAM	1	0	22.79	22.98	22.32
			1	12	22.76	22.86	22.19
			1	24	22.80	22.92	22.25
			12	0	21.08	21.23	21.21
			12	6	21.07	21.24	21.31
			12	11	21.07	21.16	21.27
			25	0	20.89	21.16	21.28
		64QAM	1	0	21.74	22.65	21.91
			1	12	21.68	22.68	21.74
			1	24	21.77	22.74	21.76
			12	0	20.72	21.14	20.83
			12	6	20.74	21.15	20.89
			12	11	20.74	21.31	20.93
			25	0	21.05	20.84	21.09
LTE Band	Bandwidth (MHz)	Modulation	RB Size	RB Offset	Average Power (dBm)		
					20450	20525	20600
					829MHz	836.5MHz	844MHz
Band 5	10	QPSK	1	0	23.11	23.27	23.12
			1	24	23.08	23.34	22.99
			1	49	23.09	23.38	23.07
			25	0	22.14	22.26	22.08
			25	12	22.19	22.26	22.10
			25	24	22.20	22.28	22.03
			50	0	22.02	22.11	22.14
		16QAM	1	0	22.49	22.81	22.73
			1	24	22.52	22.82	22.64
			1	49	22.44	22.85	22.76

			25	0	21.25	21.42	20.97
			25	12	21.24	21.36	21.02
			25	24	21.16	21.42	21.04
			50	0	21.15	21.25	21.12
		64QAM	1	0	21.73	21.80	22.33
			1	24	21.86	21.77	22.36
			1	49	22.11	21.73	22.40
			25	0	21.23	21.03	21.28
			25	12	21.24	21.02	21.34
			25	24	21.24	21.08	21.33
			50	0	20.95	20.98	21.00

LTE Band 7 part:

LTE Band	Bandwidth (MHz)	Modulation	RB Size	RB Offset	Average Power (dBm)		
					20775	21100	21425
					2502.5MHz	2535MHz	2567.5MHz
Band 7	5	QPSK	1	0	22.42	22.17	22.15
			1	12	22.51	22.19	22.23
			1	24	22.52	22.31	22.18
			12	0	21.48	21.50	21.15
			12	6	21.59	21.44	21.10
			12	11	21.58	21.44	21.12
			25	0	21.45	21.53	21.09
		16QAM	1	0	21.49	22.08	21.22
			1	12	21.55	22.08	21.27
			1	24	21.60	22.15	21.28
			12	0	20.48	20.59	20.09
			12	6	20.50	20.57	20.01
			12	11	20.52	20.57	20.02
			25	0	20.70	20.59	20.13
		64QAM	1	0	20.85	20.96	20.95
			1	12	21.01	21.18	21.09
			1	24	21.12	21.09	20.95
			12	0	19.91	19.37	19.31
			12	6	19.90	19.40	19.20
			12	11	19.89	19.40	19.20
			25	0	19.85	19.52	19.28

LTE Band	Bandwidth (MHz)	Modulation	RB Size	RB Offset	Average Power (dBm)		
					20800	21100	21400
					2505MHz	2535MHz	2565MHz
Band 7	10	QPSK	1	0	22.51	22.32	21.96
			1	24	22.56	22.44	21.97
			1	49	22.58	22.40	21.92
			25	0	21.64	21.28	21.09
			25	12	21.59	21.36	21.16
			25	24	21.58	21.38	21.04
			50	0	21.70	21.45	20.99
		16QAM	1	0	22.00	22.41	21.61
			1	24	22.08	22.48	21.62
			1	49	21.96	22.42	21.60
			25	0	20.79	20.54	20.18
			25	12	20.81	20.49	20.15
			25	24	20.82	20.59	20.18
			50	0	20.80	20.61	20.15

		64QAM	1	0	21.55	21.31	21.08
			1	24	21.75	21.37	21.09
			1	49	21.64	21.44	20.92
			25	0	19.77	19.43	19.12
			25	12	19.73	19.37	19.11
			25	24	19.73	19.40	19.14
			50	0	19.76	19.31	19.08
LTE Band	Bandwidth (MHz)	Modulation	RB Size	RB Offset	Average Power (dBm)		
					20825	21100	21375
					2507.5MHz	2535MHz	2562.5MHz
Band 7	15	QPSK	1	0	22.33	22.23	21.98
			1	37	22.41	22.28	21.96
			1	74	22.44	22.30	21.93
			36	0	21.66	21.22	21.20
			36	16	21.64	21.31	21.07
			36	35	21.65	21.33	21.11
			75	0	21.58	21.39	21.10
		16QAM	1	0	22.16	22.46	21.69
			1	37	22.30	22.45	21.69
			1	74	22.20	22.54	21.54
			36	0	20.77	20.35	20.19
			36	16	20.75	20.39	20.27
			36	35	20.80	20.35	20.15
			75	0	20.66	20.43	20.14
		64QAM	1	0	21.69	21.26	21.02
			1	37	21.80	21.39	21.07
			1	74	21.65	21.38	20.86
			36	0	19.75	19.40	19.20
			36	16	19.76	19.44	19.14
			36	35	19.77	19.47	19.16
			75	0	19.73	19.41	19.06
LTE Band	Bandwidth (MHz)	Modulation	RB Size	RB Offset	Average Power (dBm)		
					20850	21100	21350
					2510MHz	2535MHz	2560MHz
Band 7	20	QPSK	1	0	22.39	22.29	22.20
			1	49	22.43	22.31	22.20
			1	99	22.36	22.35	22.21
			50	0	21.41	21.14	21.21
			50	24	21.39	21.26	21.10
			50	49	21.40	21.28	21.08
			100	0	21.56	21.25	21.16
		16QAM	1	0	21.77	22.17	21.72
			1	49	21.82	22.25	21.74
			1	99	21.71	22.26	21.65

			50	0	20.60	20.37	20.26
			50	24	20.65	20.30	20.34
			50	49	20.57	20.32	20.30
			100	0	20.49	20.42	20.18
		64QAM	1	0	21.46	22.12	21.33
			1	49	21.49	22.14	21.24
			1	99	21.50	22.10	21.21
			50	0	19.64	19.42	19.17
			50	24	19.62	19.34	19.07
			50	49	19.61	19.35	19.09
			100	0	19.49	19.27	19.22

LTE Band 12 part:

LTE Band	Bandwidth (MHz)	Modulation	RB Size	RB Offset	Average Power (dBm)		
					23017	23095	23175
					699.7MHz	707.5MHz	715.3MHz
Band 12	1.4	QPSK	1	0	23.06	23.09	23.21
			1	2	23.06	23.05	23.11
			1	5	23.09	23.16	23.18
			3	0	23.17	23.16	23.14
			3	1	23.15	23.14	23.11
			3	2	23.15	23.17	23.26
			6	0	22.02	22.06	22.30
		16QAM	1	0	23.49	22.71	22.63
			1	2	23.20	22.75	22.67
			1	5	23.10	22.78	22.53
			3	0	21.78	22.06	21.79
			3	1	21.81	22.08	21.80
			3	2	21.79	22.03	21.79
			6	0	21.35	21.26	21.09
		64QAM	1	0	22.64	22.35	21.96
			1	2	21.97	22.44	21.90
			1	5	21.99	22.36	21.91
			3	0	21.74	21.97	22.25
			3	1	21.75	21.89	22.28
			3	2	21.78	21.95	22.32
			6	0	20.67	21.22	21.12

LTE Band	Bandwidth (MHz)	Modulation	RB Size	RB Offset	Average Power (dBm)		
					23025	23095	23165
					700.5MHz	707.5MHz	714.5MHz
Band 12	3	QPSK	1	0	23.13	23.03	23.05
			1	7	23.07	23.10	23.03
			1	14	23.14	23.14	23.06
			8	0	21.98	22.00	22.08
			8	4	22.05	22.03	22.12
			8	7	22.14	22.02	22.08
			15	0	22.09	22.09	22.21
		16QAM	1	0	22.58	23.36	22.75
			1	7	22.49	23.30	22.75
			1	14	22.53	22.60	22.67
			8	0	21.14	21.07	21.39
			8	4	21.21	21.08	21.23
			8	7	21.17	21.07	21.18
			15	0	20.89	20.98	21.17
		64QAM	1	0	22.20	22.15	22.14

			1	7	22.33	21.60	22.17
			1	14	22.30	21.61	22.10
			8	0	20.73	20.63	20.66
			8	4	20.77	20.82	20.57
			8	7	20.74	21.37	21.00
			15	0	20.73	21.07	21.04
LTE Band	Bandwidth (MHz)	Modulation	RB Size	RB Offset	Average Power (dBm)		
					23035	23095	23155
					701.5MHz	707.5MHz	713.5MHz
Band 12	5	QPSK	1	0	23.08	23.10	23.09
			1	12	23.07	23.08	23.12
			1	24	23.07	23.12	23.04
			12	0	22.16	22.02	22.16
			12	6	22.10	21.93	22.23
			12	11	22.16	21.94	22.07
			25	0	22.12	22.00	22.15
		16QAM	1	0	22.66	22.64	22.15
			1	12	22.67	22.62	22.22
			1	24	22.87	22.63	22.18
			12	0	21.01	21.12	21.51
			12	6	21.02	21.11	21.46
			12	11	21.02	21.06	21.43
			25	0	21.01	21.08	21.22
		64QAM	1	0	21.62	22.58	22.03
			1	12	21.62	22.49	21.70
			1	24	21.70	22.91	21.66
			12	0	20.64	21.02	21.16
			12	6	20.64	21.03	21.15
			12	11	20.65	21.05	21.18
			25	0	20.65	21.25	21.07
LTE Band	Bandwidth (MHz)	Modulation	RB Size	RB Offset	Average Power (dBm)		
					23060	23095	23130
					704MHz	707.5MHz	711MHz
Band 12	10	QPSK	1	0	22.98	23.19	22.90
			1	24	23.08	23.19	23.01
			1	49	23.03	23.31	23.03
			25	0	22.13	22.04	22.00
			25	12	22.10	22.07	22.06
			25	24	22.03	22.09	22.07
			50	0	22.09	22.14	22.01
		16QAM	1	0	22.46	22.60	22.41
			1	24	22.39	22.62	22.47
			1	49	22.46	22.69	22.59
			25	0	21.10	21.18	20.86

			25	12	21.24	21.18	20.93
			25	24	21.24	21.16	20.97
			50	0	21.19	21.05	21.43
		64QAM	1	0	21.62	21.61	22.17
			1	24	21.68	21.69	22.58
			1	49	21.63	22.08	22.26
			25	0	20.87	20.88	21.26
			25	12	20.76	20.90	21.30
			25	24	20.85	20.77	21.20
			50	0	21.31	21.34	21.27

LTE Band 17 part:

LTE Band	Bandwidth (MHz)	Modulation	RB Size	RB Offset	Average Power (dBm)		
					23755	23790	23825
					706.5MHz	710.0MHz	713.5MHz
Band 17	5	QPSK	1	0	23.15	23.03	23.24
			1	12	23.13	23.05	23.12
			1	24	23.16	23.08	23.06
			12	0	22.16	22.01	22.10
			12	6	22.16	21.93	22.12
			12	11	22.16	22.10	22.23
			25	0	22.16	22.04	22.22
		16QAM	1	0	22.38	22.60	22.83
			1	12	22.33	22.68	22.86
			1	24	22.33	22.66	22.80
			12	0	21.00	20.99	21.57
			12	6	21.00	20.98	21.34
			12	11	21.03	20.91	21.31
			25	0	21.17	21.38	21.04
		64QAM	1	0	21.67	21.52	22.90
			1	12	21.59	22.02	22.74
			1	24	21.65	22.04	22.60
			12	0	20.77	21.05	21.48
			12	6	20.77	21.10	21.33
			12	11	20.76	21.04	21.30
			25	0	21.02	21.14	21.03

LTE Band	Bandwidth (MHz)	Modulation	RB Size	RB Offset	Average Power (dBm)		
					23780	23790	23800
					709.0MHz	710.0MHz	711.0MHz
Band 17	10	QPSK	1	0	22.96	23.20	23.00
			1	24	22.92	23.06	23.00
			1	49	23.04	23.15	23.04
			25	0	22.15	22.09	21.93
			25	12	22.04	21.99	22.00
			25	24	22.05	22.01	22.01
			50	0	22.07	22.14	22.04
		16QAM	1	0	22.64	23.28	22.50
			1	24	22.66	23.29	22.76
			1	49	22.71	23.40	22.78
			25	0	21.23	21.08	20.86
			25	12	21.25	21.06	20.77
			25	24	21.26	21.14	20.87
			50	0	21.11	21.62	21.54
		64QAM	1	0	22.32	22.20	22.24
			1	24	22.38	22.68	22.73

			1	49	22.46	22.40	22.26
			25	0	20.81	21.16	21.31
			25	12	20.82	21.21	21.32
			25	24	20.87	21.22	21.36
			50	0	21.33	21.16	21.38

LTE Band 26 part:

LTE Band	Bandwidth (MHz)	Modulation	RB Size	RB Offset	Average Power (dBm)		
					26697	26865	27033
					814.7MHz	831.5MHz	848.3MHz
Band 26	1.4	QPSK	1	0	23.17	23.13	23.11
			1	2	23.12	23.13	23.14
			1	5	23.22	23.18	23.13
			3	0	23.09	23.03	22.98
			3	1	23.03	23.01	22.97
			3	2	23.17	23.09	23.08
			6	0	22.09	22.08	22.07
		16QAM	1	0	22.98	23.18	23.49
			1	2	23.02	23.25	23.52
			1	5	23.03	23.41	23.56
			3	0	21.74	21.71	21.88
			3	1	21.86	21.86	21.87
			3	2	21.85	21.81	21.75
			6	0	21.18	21.09	21.00
		64QAM	1	0	21.67	21.88	22.40
			1	2	21.58	21.63	22.31
			1	5	21.54	21.68	22.36
			3	0	21.89	21.79	21.76
			3	1	21.90	22.03	22.27
			3	2	21.98	22.01	22.13
			6	0	20.51	20.53	20.64

LTE Band	Bandwidth (MHz)	Modulation	RB Size	RB Offset	Average Power (dBm)		
					26705	26865	27025
					815.5MHz	831.5MHz	847.5MHz
Band 26	3	QPSK	1	0	23.08	23.08	23.08
			1	7	23.13	23.11	23.09
			1	14	23.14	23.12	23.08
			8	0	22.10	22.14	22.23
			8	4	22.17	22.17	22.18
			8	7	22.17	22.15	22.12
			15	0	22.20	22.15	22.12
		16QAM	1	0	22.81	22.77	22.75
			1	7	22.81	22.76	22.74
			1	14	22.77	22.77	22.77
			8	0	21.25	21.31	21.35
			8	4	21.29	21.33	21.37
			8	7	21.35	21.23	21.15
			15	0	21.02	21.08	21.16
		64QAM	1	0	22.53	22.25	22.12
			1	7	22.55	22.36	22.27

			1	14	22.53	22.51	22.06
			8	0	20.88	20.88	20.88
			8	4	20.87	20.79	20.75
			8	7	20.80	20.79	20.77
			15	0	20.91	20.95	20.99
LTE Band	Bandwidth (MHz)	Modulation	RB Size	RB Offset	Average Power (dBm)		
					26715	26865	27015
					816.5MHz	831.5MHz	846.6MHz
Band 26	5	QPSK	1	0	23.09	23.13	23.20
			1	12	23.02	23.03	23.11
			1	24	23.04	23.08	23.16
			12	0	22.19	22.14	22.11
			12	6	22.07	22.11	22.18
			12	11	22.13	22.12	22.12
			25	0	22.25	22.16	22.09
		16QAM	1	0	22.73	22.53	22.34
			1	12	23.04	22.36	22.25
			1	24	23.11	22.96	22.27
			12	0	21.20	21.15	21.03
			12	6	21.22	21.12	21.07
			12	11	21.19	21.18	21.17
			25	0	21.05	21.22	21.38
		64QAM	1	0	21.65	21.69	21.78
			1	12	22.12	21.98	21.91
			1	24	22.14	22.03	21.76
			12	0	20.74	20.75	20.78
			12	6	20.75	20.77	20.80
			12	11	20.75	20.88	20.90
			25	0	21.11	21.14	21.18
LTE Band	Bandwidth (MHz)	Modulation	RB Size	RB Offset	Average Power (dBm)		
					26740	26865	26990
					819MHz	831.5MHz	844MHz
Band 26	10	QPSK	1	0	23.04	23.03	23.03
			1	24	23.12	22.98	22.97
			1	49	23.14	23.11	22.99
			25	0	22.28	22.15	22.06
			25	12	22.29	22.14	21.97
			25	24	22.29	22.23	22.14
			50	0	22.11	22.11	22.11
		16QAM	1	0	22.55	22.56	22.69
			1	24	22.60	22.63	22.72
			1	49	22.54	22.69	22.82
			25	0	21.26	21.15	21.10
			25	12	21.30	21.26	21.02

			25	24	21.30	21.23	21.13
			50	0	21.31	21.26	21.14
		64QAM	1	0	21.75	21.86	22.32
			1	24	21.80	21.96	22.33
			1	49	21.76	21.99	22.32
			25	0	20.87	20.98	21.42
			25	12	20.96	21.26	21.40
			25	24	21.05	21.12	21.15
			50	0	21.06	20.89	20.85

LTE Band	Bandwidth (MHz)	Modulation	RB Size	RB Offset	Average Power (dBm)		
					26765	26865	26965
					821.5MHz	831.5MHz	841.5MHz
Band 26	15	QPSK	1	0	23.01	23.02	22.99
			1	37	23.02	23.17	23.01
			1	74	23.06	23.11	23.03
			36	0	22.14	22.11	22.38
			36	16	22.36	22.47	22.31
			36	35	22.31	22.44	22.28
			75	0	22.15	22.14	22.19
		16QAM	1	0	23.01	23.03	22.69
			1	37	23.03	23.14	22.75
			1	74	23.11	23.16	22.83
			36	0	22.32	22.12	22.37
			36	16	22.39	22.42	22.37
			36	35	22.36	22.44	22.34
			75	0	21.13	21.15	21.10
		64QAM	1	0	21.99	21.98	22.35
			1	37	22.16	22.11	22.35
			1	74	22.28	22.10	22.34
			36	0	22.26	22.12	22.37
			36	16	22.36	22.42	22.31
			36	35	22.43	22.44	22.42
			75	0	21.24	21.23	21.25

LTE Band 38 part:

LTE Band	Bandwidth (MHz)	Modulation	RB Size	RB Offset	Average Power (dBm)		
					37775	38000	38225
					2572.5MHz	2595MHz	2617.5MHz
Band 38	5	QPSK	1	0	22.16	22.27	22.14
			1	12	22.33	22.31	22.11
			1	24	22.24	22.32	22.12
			12	0	21.82	21.84	21.65
			12	6	21.72	21.85	21.68
			12	11	21.75	21.86	21.69
			25	0	21.77	21.83	21.62
		16QAM	1	0	22.91	22.43	22.75
			1	12	22.89	22.32	22.68
			1	24	22.92	22.45	22.71
			12	0	20.21	20.24	20.22
			12	6	20.13	20.25	20.14
			12	11	20.14	20.26	20.09
			25	0	20.40	20.56	20.13
		64QAM	1	0	21.11	20.64	20.51
			1	12	21.38	20.32	20.54
			1	24	21.16	20.75	20.41
			12	0	19.36	19.72	19.35
			12	6	19.27	19.67	19.36
			12	11	19.28	19.67	19.37
			25	0	19.59	19.70	19.41

LTE Band	Bandwidth (MHz)	Modulation	RB Size	RB Offset	Average Power (dBm)		
					37800	38000	38200
					2575MHz	2595MHz	2615MHz
Band 38	10	QPSK	1	0	22.13	22.43	22.24
			1	24	22.19	22.42	22.24
			1	49	22.22	22.52	22.29
			25	0	21.65	21.76	21.76
			25	12	21.65	21.77	21.77
			25	24	21.66	21.77	21.74
			50	0	21.68	21.78	21.68
		16QAM	1	0	22.15	22.60	22.25
			1	24	22.24	22.74	22.14
			1	49	22.19	22.67	22.17
			25	0	20.47	20.43	20.56
			25	12	20.47	20.44	20.47
			25	24	20.54	20.29	20.54
			50	0	20.17	20.44	20.19
		64QAM	1	0	20.40	21.19	20.44
			1	24	20.43	21.04	20.39

			1	49	20.44	21.16	20.36
			25	0	19.62	19.63	19.69
			25	12	19.63	19.63	19.66
			25	24	19.63	19.62	19.72
			50	0	19.55	19.65	19.50
LTE Band	Bandwidth (MHz)	Modulation	RB Size	RB Offset	Average Power (dBm)		
					37825	38000	38175
					2577.5MHz	2595MHz	2612.5MHz
Band 38	15	QPSK	1	0	22.07	22.36	22.25
			1	37	22.16	22.31	22.28
			1	74	22.28	22.26	22.34
			36	0	21.60	21.77	21.73
			36	16	21.60	21.78	21.76
			36	35	21.60	21.75	21.78
			75	0	21.67	21.75	21.72
		16QAM	1	0	21.53	23.09	21.88
			1	37	21.95	23.19	21.84
			1	74	21.59	23.13	21.75
			36	0	20.28	20.32	20.34
			36	16	20.27	20.31	20.35
			36	35	20.27	20.28	20.37
			75	0	20.29	20.45	20.31
		64QAM	1	0	20.64	22.03	20.57
			1	37	20.81	22.20	20.66
			1	74	21.01	22.27	20.58
			36	0	19.44	19.45	19.59
			36	16	19.44	19.56	19.60
			36	35	19.43	19.59	19.61
			75	0	19.41	19.75	19.45
LTE Band	Bandwidth (MHz)	Modulation	RB Size	RB Offset	Average Power (dBm)		
					37850	38000	38150
					2580MHz	2595MHz	2610MHz
Band 38	20	QPSK	1	0	22.24	22.12	22.09
			1	49	22.34	22.14	22.17
			1	99	22.48	22.09	22.20
			50	0	21.75	21.83	21.71
			50	24	21.76	21.86	21.58
			50	49	21.77	21.86	21.60
			100	0	21.73	21.78	21.73
		16QAM	1	0	22.65	22.01	22.19
			1	49	22.73	21.92	22.87
			1	99	22.88	21.87	22.91
			50	0	20.38	20.45	20.28
			50	24	20.39	20.47	20.27

			50	49	20.40	20.46	20.28
			100	0	20.42	20.31	20.19
		64QAM	1	0	21.50	21.71	20.99
			1	49	21.57	21.73	21.02
			1	99	21.69	21.59	21.23
			50	0	19.64	19.49	19.56
			50	24	19.65	19.50	19.45
			50	49	19.65	19.49	19.50
			100	0	19.56	19.46	19.37

LTE Band 41 part:

LTE Band	Band-width (MHz)	Modu-lation	RB Size	RB Offset	Average Power (dBm)				
					40065	40355	40640	40750	41215
					2537.5MHz	2566.5MHz	2595.0MHz	2624.0MHz	2652.5MHz
Band 41	5	QPSK	1	0	21.92	20.02	22.43	20.82	18.12
			1	12	22.02	22.09	22.41	22.19	22.15
			1	24	21.97	22.04	22.48	22.18	22.10
			12	0	21.77	21.71	21.98	21.80	21.65
			12	6	21.73	21.70	21.99	21.79	21.66
			12	11	21.75	21.71	21.87	21.76	21.66
			25	0	21.76	21.78	21.97	21.84	21.80
		16QAM	1	0	22.41	22.60	22.84	22.68	22.79
			1	12	22.51	22.63	22.86	22.71	22.75
			1	24	22.51	22.61	23.15	22.79	22.70
			12	0	20.27	20.26	20.48	20.33	20.24
			12	6	20.28	20.26	20.49	20.33	20.23
			12	11	20.26	20.25	20.46	20.32	20.23
			25	0	20.22	20.27	20.60	20.38	20.32
		64QAM	1	0	20.79	20.74	21.21	20.90	20.69
			1	12	20.94	20.79	21.24	20.94	20.63
			1	24	20.84	20.69	21.25	20.88	20.54
			12	0	19.61	19.51	19.71	19.58	19.41
			12	6	19.59	19.50	19.81	19.60	19.41
			12	11	19.57	19.49	19.77	19.58	19.40
			25	0	19.54	19.49	19.81	19.60	19.44

LTE Band	Band-width (MHz)	Modu-lation	RB Size	RB Offset	Average Power (dBm)				
					40090	40365	40640	40915	41190
					2540.0MHz	2567.5MHz	2595.0MHz	2622.5MHz	2650.0MHz
Band 41	10	QPSK	1	0	22.23	11.77	22.21	15.25	1.30
			1	24	22.35	22.38	22.18	22.31	22.40
			1	49	22.37	22.38	22.27	22.34	22.39
			25	0	21.72	21.83	21.80	21.82	21.93
			25	12	21.76	21.83	21.78	21.81	21.90
			25	24	21.72	21.83	21.84	21.83	21.94
			50	0	21.77	21.90	21.89	21.89	22.02
		16QAM	1	0	22.78	22.58	22.67	22.61	22.37
			1	24	22.91	22.66	22.72	22.68	22.40
			1	49	22.88	22.69	22.65	22.67	22.49
			25	0	20.43	20.52	20.37	20.47	20.61
			25	12	20.44	20.53	20.44	20.50	20.61
			25	24	20.43	20.52	20.42	20.49	20.61
			50	0	20.37	20.45	20.45	20.45	20.52
		64QAM	1	0	21.03	20.82	22.43	21.36	20.61

			1	24	21.09	20.91	22.45	21.42	20.72
			1	49	21.34	21.07	22.50	21.55	20.80
			25	0	19.55	19.66	19.62	19.65	19.77
			25	12	19.55	19.71	19.56	19.66	19.86
			25	24	19.54	19.73	19.57	19.67	19.91
			50	0	19.41	19.65	19.78	19.69	19.89
LTE Band	Band-width (MHz)	Modu-lation	RB Size	RB Offset	Average Power (dBm)				
					40115	40375	40640	40900	41165
					2542.5MHz	2568.5MHz	2595.0MHz	2673.5MHz	2647.5MHz
Band 41	15	QPSK	1	0	22.16	22.30	22.55	22.38	22.44
			1	37	22.17	22.32	22.55	22.40	22.47
			1	74	22.20	22.32	22.47	22.37	22.44
			36	0	21.73	21.80	21.90	21.83	21.86
			36	16	21.59	21.73	21.93	21.80	21.87
			36	35	21.59	21.82	21.93	21.85	22.04
			75	0	21.67	21.83	21.93	21.86	21.98
		16QAM	1	0	21.68	21.70	22.85	22.08	21.71
			1	37	21.73	21.75	22.86	22.12	21.77
			1	74	21.66	21.79	22.86	22.14	21.91
			36	0	20.30	20.51	20.42	20.48	20.72
			36	16	20.30	20.43	20.43	20.43	20.56
			36	35	20.30	20.43	20.43	20.43	20.56
			75	0	20.27	20.39	20.48	20.42	20.51
		64QAM	1	0	20.42	20.84	21.22	20.97	21.26
			1	37	20.60	20.89	21.27	21.01	21.17
			1	74	20.55	20.82	21.24	20.96	21.09
			36	0	19.47	19.69	19.59	19.66	19.91
			36	16	19.46	19.69	19.60	19.66	19.91
			36	35	19.47	19.69	19.60	19.66	19.91
			75	0	19.45	19.55	19.85	19.65	19.64
LTE Band	Band-width (MHz)	Modu-lation	RB Size	RB Offset	Average Power (dBm)				
					40140	40390	40640	40890	41140
					2545.0MHz	2570.0MHz	2595.0MHz	2620.0MHz	2645.0MHz
Band 41	20	QPSK	1	0	22.22	21.02	22.32	21.45	19.81
			1	49	22.27	22.34	22.39	22.36	22.41
			1	99	22.30	22.38	22.36	22.37	22.45
			50	0	21.68	21.79	21.91	21.83	21.90
			50	24	21.66	21.73	21.94	21.80	21.79
			50	49	21.66	21.74	21.80	21.76	21.81
			100	0	21.76	21.80	21.95	21.85	21.83
		16QAM	1	0	22.12	22.47	22.94	22.63	22.82
			1	49	22.14	22.52	23.04	22.69	22.89
			1	99	22.16	22.53	22.98	22.68	22.89
			50	0	20.13	20.30	20.60	20.40	20.47

			50	24	20.13	20.32	20.63	20.42	20.51
			50	49	20.13	20.33	20.65	20.44	20.53
			100	0	20.41	20.49	20.45	20.47	20.56
		64QAM	1	0	21.06	21.41	21.41	21.41	21.75
			1	49	20.96	21.36	21.41	21.37	21.75
			1	99	20.83	21.33	21.33	21.33	21.83
			50	0	19.39	19.56	19.74	19.62	19.73
			50	24	19.39	19.57	19.76	19.63	19.75
			50	49	19.39	19.58	19.65	19.60	19.77
			100	0	19.50	19.58	19.63	19.60	19.66

Note:

1. Per KDB 447498 D01v06 section 4.1., the required test channels number is 5 for LTE Band 41.

LTE Band 66 part:

LTE Band	Bandwidth (MHz)	Modulation	RB Size	RB Offset	Average Power (dBm)		
					131979	132322	132665
					1710.70MHz	1745.00MHz	1779.3MHz
Band 66	1.4	QPSK	1	0	22.80	22.83	22.72
			1	2	22.69	22.78	22.70
			1	5	22.67	22.77	22.71
			3	0	22.76	22.74	22.63
			3	1	22.80	22.74	22.73
			3	2	22.78	22.72	22.73
			6	0	21.75	21.78	21.71
		16QAM	1	0	22.85	22.50	22.41
			1	2	22.85	22.65	22.38
			1	5	22.74	22.59	22.35
			3	0	21.42	21.44	21.42
			3	1	21.35	21.45	21.70
			3	2	21.42	21.53	21.78
			6	0	20.82	20.91	20.89
		64QAM	1	0	21.88	22.42	21.29
			1	2	21.93	22.33	21.24
			1	5	21.85	22.43	21.27
			3	0	21.50	21.53	21.93
			3	1	21.48	21.50	21.60
			3	2	21.47	21.49	21.59
			6	0	20.68	20.62	20.28

LTE Band	Bandwidth (MHz)	Modulation	RB Size	RB Offset	Average Power (dBm)		
					131987	132322	132657
					1711.50MHz	1745.00MHz	1778.50MHz
Band 66	3	QPSK	1	0	22.66	22.73	22.59
			1	7	22.72	22.70	22.64
			1	14	22.59	22.66	22.67
			8	0	21.76	21.77	21.62
			8	4	21.79	21.70	21.70
			8	7	21.67	21.69	21.68
			15	0	21.84	21.72	21.66
		16QAM	1	0	22.46	23.06	22.42
			1	7	22.43	23.02	22.50
			1	14	22.45	23.01	22.51
			8	0	21.03	20.88	20.99
			8	4	21.05	20.96	20.94
			8	7	20.98	20.90	21.02
			15	0	20.76	20.81	20.88
		64QAM	1	0	22.25	21.64	21.88
			1	7	22.22	21.60	21.90

			1	14	22.17	21.58	21.87
			8	0	20.57	20.62	20.65
			8	4	20.59	20.63	20.65
			8	7	20.48	20.62	20.41
			15	0	20.64	20.54	20.69
LTE Band	Bandwidth (MHz)	Modulation	RB Size	RB Offset	Average Power (dBm)		
					131997	132322	132647
					1712.50MHz	1745.00MHz	1777.50MHz
Band 66	5	QPSK	1	0	22.77	22.88	22.52
			1	12	22.74	22.84	22.60
			1	24	22.68	22.87	22.65
			12	0	21.79	21.67	21.54
			12	6	21.80	21.73	21.58
			12	11	21.76	21.75	21.60
			25	0	21.75	21.66	21.69
		16QAM	1	0	22.47	22.51	21.75
			1	12	22.41	22.52	21.76
			1	24	22.49	22.46	21.82
			12	0	20.85	20.79	20.66
			12	6	20.81	20.82	20.66
			12	11	20.84	20.71	20.70
			25	0	20.71	20.83	20.82
		64QAM	1	0	21.44	22.40	20.86
			1	12	21.40	22.36	20.93
			1	24	21.40	22.33	20.98
			12	0	20.47	20.78	20.83
			12	6	20.48	20.80	20.74
			12	11	20.48	20.68	20.75
			25	0	20.43	20.61	21.02
LTE Band	Bandwidth (MHz)	Modulation	RB Size	RB Offset	Average Power (dBm)		
					132022	132322	132622
					1715.00MHz	1745.00MHz	1775.00MHz
Band 66	10	QPSK	1	0	22.71	22.81	22.47
			1	24	22.66	22.83	22.52
			1	49	22.62	22.76	22.66
			25	0	21.73	21.80	21.58
			25	12	21.75	21.73	21.64
			25	24	21.75	21.63	21.53
			50	0	21.65	21.72	21.59
		16QAM	1	0	22.10	22.61	22.12
			1	24	22.06	22.67	22.23
			1	49	22.37	22.60	22.38
			25	0	20.89	20.88	20.70
			25	12	20.89	20.85	20.68

			25	24	20.90	20.86	20.62
			50	0	20.85	20.86	20.67
		64QAM	1	0	21.49	21.25	21.81
			1	24	21.41	21.27	22.00
			1	49	22.06	21.19	22.07
			25	0	20.60	20.64	20.48
			25	12	20.60	20.61	20.47
			25	24	20.64	20.62	20.47
			50	0	20.61	20.64	20.54
LTE Band	Bandwidth (MHz)	Modulation	RB Size	RB Offset	Average Power (dBm)		
					132047	132322	132597
					1717.50MHz	1745.00MHz	1772.50MHz
Band 66	15	QPSK	1	0	22.62	22.76	22.34
			1	37	22.55	22.81	22.50
			1	74	22.42	22.68	22.62
			36	0	21.61	21.79	21.45
			36	16	21.73	21.60	21.48
			36	35	21.73	21.62	21.48
			75	0	21.61	21.69	21.57
		16QAM	1	0	22.73	22.67	22.01
			1	37	22.44	22.74	22.22
			1	74	22.46	23.10	22.38
			36	0	20.84	20.77	20.66
			36	16	20.85	20.63	20.67
			36	35	20.85	20.59	20.67
			75	0	20.77	20.78	20.75
		64QAM	1	0	21.81	21.23	21.76
			1	37	21.85	22.00	22.02
			1	74	21.88	21.92	22.02
			36	0	20.65	20.95	20.56
			36	16	20.68	20.95	20.52
			36	35	20.62	20.87	20.48
			75	0	20.53	20.52	20.54
LTE Band	Bandwidth (MHz)	Modulation	RB Size	RB Offset	Average Power (dBm)		
					132072	132322	132572
					1720.00MHz	1745.00MHz	1770.00MHz
Band 66	20	QPSK	1	0	22.91	22.57	22.45
			1	49	22.75	22.66	22.63
			1	99	22.84	22.58	22.83
			50	0	21.64	21.79	21.41
			50	24	21.55	21.75	21.39
			50	49	21.55	21.77	21.37
			100	0	21.62	21.61	21.48

		16QAM	1	0	22.93	22.58	21.89
			1	49	22.73	22.63	22.00
			1	99	22.82	22.00	22.28
			50	0	20.78	20.73	20.49
			50	24	20.76	20.77	20.61
			50	49	20.76	20.78	20.58
			100	0	20.70	20.73	20.61
		64QAM	1	0	22.53	21.78	21.57
			1	49	22.33	21.76	21.76
			1	99	22.39	21.79	21.92
			50	0	20.49	20.86	20.66
			50	24	20.55	20.76	20.74
			50	49	20.54	20.76	20.61
			100	0	20.51	20.56	20.35

12.1.4 Wi-Fi

12.1.4.1 WLAN 2.4 GHz Band Conducted Power

Conducted Power (dBm)				
Channel	Frequency (MHz)	802.11 b	802.11 g	802.11n (HT20)
CH 01	2412	16.49	13.54	12.55
CH 06	2437	**17.52**	14.52	13.56
CH 11	2462	15.32	12.71	11.82

Note:

1. Per KDB 248227 D01v02r02, choose the highest output power channel to test SAR and determine further SAR exclusion.
2. Per KDB 248227 D01v02r02, In the 2.4 GHz band, separate SAR procedures are applied to DSSS and OFDM configurations to simplify DSSS test requirements.SAR is not required for the following 2.4 GHz OFDM conditions:
   1) When KDB Publication 447498 SAR test exclusion applies to the OFDM configuration.
   2) When the highest reported SAR for DSSS is adjusted by the ratio of OFDM to DSSS specified maximum output power and the adjusted SAR is ≤ 1.2 W/kg.
3. The output power of all data rate were pre-scan, just the worst case (the lowest data rate) of all mode were shown in report.
4. Per KDB 248227 D01V02r02 section 2.2, when the EUT in continuously transmitting mode, the actual duty cycle is 97.93%, so the duty cycle factor is 1.021.

12.1.4.2 WLAN 5.2GHz Band Conducted Power

Conducted Power (dBm)				
Channel	Frequency (MHz)	802.11 a	802.11 n20	802.11 ac20
CH 36	5180	16.16	13.77	13.84
CH 40	5200	16.14	14.05	13.96
CH 48	5240	**16.25**	14.00	13.95

Conducted Power (dBm)			
Channel	Frequency (MHz)	802.11 ac40	802.11 n40
CH 38	5190	14.47	14.38
CH 46	5230	14.50	14.43

Conducted Power (dBm)		
Channel	Frequency (MHz)	802.11 ac80
CH 42	5210	14.66

Note:

1. Per KDB 248227 D01v02r02, choose the highest output power channel to test SAR and determine further SAR exclusion.
2. The output power of all data rate were pre-scan, just the worst case (the lowest data rate) of all mode were shown in report.
3. Per KDB 248227 D01V02r02 section 2.2, when the EUT in continuously transmitting mode, the actual duty cycle is 88.09%, so the duty cycle factor is 1.135.

12.1.4.3 WLAN 5.3GHz Band Conducted Power

Conducted Power (dBm)				
Channel	Frequency (MHz)	802.11 a	802.11 ac20	802.11 n20
CH 52	5260	**15.15**	13.98	14.08
CH 56	5280	14.56	13.52	13.60
CH 64	5320	15.05	14.02	14.04

Conducted Power (dBm)			
Channel	Frequency (MHz)	802.11 ac40	802.11 n40
CH 54	5270	13.97	14.03
CH 62	5310	14.24	14.25

Conducted Power (dBm)		
Channel	Frequency (MHz)	802.11 ac80
CH 58	5290	14.26

Note:
1. Per KDB 248227 D01v02r02, choose the highest output power channel to test SAR and determine further SAR exclusion.
2. The output power of all data rate were pre-scan, just the worst case (the lowest data rate) of all mode were shown in report.
3. Per KDB 248227 D01V02r02 section 2.2, when the EUT in continuously transmitting mode, the actual duty cycle is 88.55%, so the duty cycle factor is 1.129.

12.1.4.4 WLAN 5.6GHz Band Conducted Power

Conducted Power (dBm)				
Channel	Frequency (MHz)	802.11 a	802.11 ac20	802.11 n20
CH 100	5500	**15.95**	14.74	14.36
CH 120	5600	14.24	12.74	12.74
CH 140	5700	11.96	11.21	11.27

Conducted Power (dBm)			
Channel	Frequency (MHz)	802.11 ac40	802.11 n40
CH 102	5510	14.04	14.81
CH 108	5590	13.64	14.34
CH 134	5670	11.77	12.49

Conducted Power (dBm)		
Channel	Frequency (MHz)	802.11 ac80
CH 106	5530	14.35
CH 122	5610	12.31

Note:
1. Per KDB 248227 D01v02r02, choose the highest output power channel to test SAR and determine further SAR exclusion.
2. The output power of all data rate were pre-scan, just the worst case (the lowest data rate) of all mode were shown in report.
3. Per KDB 248227 D01V02r02 section 2.2, when the EUT in continuously transmitting mode, the actual duty cycle is 88.83%, so the duty cycle factor is 1.126.

12.1.4.5 WLAN 5.8GHz Band Conducted Power

Conducted Power (dBm)				
Channel	Frequency (MHz)	802.11 a	802.11 ac20	802.11 n20
CH 149	5745	14.99	14.31	14.31
CH 157	5785	**15.18**	14.53	14.57
CH 165	5825	13.96	13.20	13.25

Conducted Power (dBm)			
Channel	Frequency (MHz)	802.11 ac40	802.11 n40
CH 151	5755	14.47	14.41
CH 159	5795	14.11	14.10

Conducted Power (dBm)		
Channel	Frequency (MHz)	802.11 ac80
CH 155	5775	14.77

Note:

1. Per KDB 248227 D01v02r02, choose the highest output power channel to test SAR and determine further SAR exclusion.
2. The output power of all data rate were pre-scan, just the worst case (the lowest data rate) of all mode were shown in report.
3. Per KDB 248227 D01V02r02 section 2.2, when the EUT in continuously transmitting mode, the actual duty cycle is 88.93%, so the duty cycle factor is 1.124.

12.1.5 Bluetooth

Bluetooth Conducted Power

Conducted Power (dBm)				
Channel	Frequency (MHz)	GFSK	π/4-DQPSK	8DPSK
CH 00	2402	3.44	5.85	3.28
CH 39	2441	3.52	5.82	3.36
CH 78	2480	2.57	4.54	2.37

Conducted Power (dBm)					
Channel	Frequency (MHz)	LE 1M PHY	LE 2M PHY	LE Coded PHY, S=2	LE Coded PHY, S=8
CH 00	2402	0.77	0.55	0.66	0.55
CH 19	2440	0.16	-0.10	-0.02	-0.15
CH 39	2480	-1.09	-1.24	-1.15	-1.35

Note:

1. Per KDB 447498 D01v06, the 1-g SAR test exclusion thresholds for 100 MHz to 6 GHz at *test separation distances* ≤50 mm are determined by:
   [(*max. power of channel, including tune-up tolerance, mW*)/ (*min. test separation distance, mm*)] · [√f(GHz)] ≤ 3.0 for1-g SAR, where
   - f(GHz) is the RF channel transmit frequency in GHz
   - Power and distance are rounded to the nearest mW and mm before calculation
   - The result is rounded to one decimal place for comparison

Channel	Frequency (GHz)	Max. tune-up Power (dBm)	Max. Power (mW)	Test distance (mm)	Result	exclusion thresholds for 1-g SAR
CH 00	2.402	6.0	3.98	5	1.23	3.0

2. The max. tune-uppower wasprovided by manufacturer,base on the result of note 1, RF exposure evaluation is not required.
3. The output power of all data rate were pre-scan, just the worst case of all mode were shown in report.
4. When the minimum *test separation distance* is < 5 mm, a distance of 5 mm according is applied to determine SAR test exclusion.

12.2 SAR TEST RESULTS

12.2.1 Standalone Head SAR Data

➢ GSM Head SAR

Plot No.	Band/Mode	Test Position	CH.	Freq. (MHz)	Output Power (dBm)	Power Drift (dB)	Tune-Up Limit (dBm)	Meas. SAR_{1g} (W/kg)	Scaling Factor	Reported SAR_{1g} (W/kg)
	GSM850/Voice	Right Cheek	190	836.6	32.37	0.15	32.5	0.592	1.03	0.610
1	GSM850/Voice	Right Tilted	190	836.6	32.37	0.11	32.5	**0.641**	1.03	0.660
	GSM850/Voice	Left Cheek	190	836.6	32.37	-0.12	32.5	0.457	1.03	0.471
	GSM850/Voice	Left Tilted	190	836.6	32.37	-0.06	32.5	0.417	1.03	0.430
	PCS1900/Voice	Right Cheek	661	1880	29.11	0.09	29.5	0.861	1.094	0.942
	PCS1900/Voice	Right Tilted	661	1880	29.11	0.05	29.5	0.990	1.094	1.083
	PCS1900/Voice	Left Cheek	661	1880	29.11	0.13	29.5	0.487	1.094	0.533
	PCS1900/Voice	Left Tilted	661	1880	29.11	0.13	29.5	0.530	1.094	0.580
	PCS1900/Voice	Right Tilted	512	1850.2	28.89	-0.06	29.5	0.765	1.151	0.881
2	PCS1900/Voice	Right Tilted	810	1909.8	28.97	0.10	29.5	**1.030**	1.13	1.164
	PCS1900/Voice	**Right Tilted**	**810**	**1909.8**	**28.97**	**0.05**	**29.5**	**0.989**	**1.13**	**1.118**
	PCS1900/Voice	Right Cheek	512	1850.2	28.89	0.02	29.5	0.663	1.151	0.763
	PCS1900/Voice	Right Cheek	810	1909.8	28.97	0.07	29.5	0.958	1.13	1.083
ANSI / IEEE C95.1 – SAFETY LIMIT Spatial Peak Uncontrolled Exposure/General Population					**1.6 W/kg (mW/g) Averaged over 1g**					

➢ WCDMA Head SAR

Plot No.	Band/Mode	Test Position	CH.	Freq. (MHz)	Output Power (dBm)	Power Drift (dB)	Tune-Up Limit (dBm)	Meas. SAR_{1g} (W/kg)	Scaling Factor	Reported SAR_{1g} (W/kg)
	Band II/RMC	Right Cheek	9538	1907.6	21.94	0.18	22.5	0.640	1.138	0.728
3	Band II/RMC	Right Tilted	9538	1907.6	21.94	0.06	22.5	**0.755**	1.138	0.859
	Band II/RMC	Left Cheek	9538	1907.6	21.94	0.06	22.5	0.361	1.138	0.411
	Band II/RMC	Left Tilted	9538	1907.6	21.94	-0.08	22.5	0.421	1.138	0.479
	Band II/RMC	Right Tilted	9262	1852.4	21.85	0.04	22.5	0.503	1.161	0.584
	Band II/RMC	Right Tilted	9400	1880	21.92	0.03	22.5	0.566	1.143	0.647
	Band IV/RMC	Right Cheek	1312	1712.4	21.97	0.05	22.5	0.544	1.13	0.615
4	Band IV/RMC	Right Tilted	1312	1712.4	21.97	0.00	22.5	**0.577**	1.13	0.652
	Band IV/RMC	Left Cheek	1312	1712.4	21.97	-0.03	22.5	0.309	1.13	0.349
	Band IV/RMC	Left Tilted	1312	1712.4	21.97	0.03	22.5	0.328	1.13	0.371
5	Band V/RMC	Right Cheek	4183	836.6	22.77	0.08	23.0	**0.668**	1.054	0.704
	Band V/RMC	Right Tilted	4183	836.6	22.77	0.03	23.0	0.599	1.054	0.631
	Band V/RMC	Left Cheek	4183	836.6	22.77	0.00	23.0	0.431	1.054	0.454
	Band V/RMC	Left Tilted	4183	836.6	22.77	-0.04	23.0	0.371	1.054	0.391
ANSI / IEEE C95.1 – SAFETY LIMIT Spatial Peak Uncontrolled Exposure/General Population					**1.6 W/kg (mW/g) Averaged over 1g**					

➢ FDD-LTE Band 2(20MHz) QPSK Head SAR

Plot No.	Band/Mode	Test Position	CH.	Freq. (MHz)	Output Power (dBm)	Power Drift (dB)	Tune-Up Limit (dBm)	Meas. SAR_{1g} (W/kg)	Scaling Factor	Reported SAR_{1g} (W/kg)
	Band2/1RB#49	Right Cheek	19100	1900	23.08	0.14	23.5	0.513	1.102	0.565
	Band2/1RB#49	Right Tilted	19100	1900	23.08	0.08	23.5	0.568	1.102	0.626
	Band2/1RB#49	Left Cheek	19100	1900	23.08	-0.13	23.5	0.481	1.102	0.530
	Band2/1RB#49	Left Tilted	19100	1900	23.08	0.11	23.5	0.545	1.102	0.601
	Band2/50%RB#0	Right Cheek	19100	1900	21.98	0.09	22.5	0.654	1.127	0.737
6	Band2/50%RB#0	Right Tilted	19100	1900	21.98	0.09	22.5	**0.821**	1.127	0.925
	Band2/50%RB#0	**Right Tilted**	**19100**	**1900**	**21.98**	**-0.16**	**22.5**	**0.799**	**1.127**	**0.900**
	Band2/50%RB#0	Left Cheek	19100	1900	21.98	-0.01	22.5	0.357	1.127	0.402
	Band2/50%RB#0	Left Tilted	19100	1900	21.98	-0.02	22.5	0.516	1.127	0.582
	Band2/50%RB#0	Right Tilted	18700	1860	21.74	-0.11	22.5	0.662	1.191	0.788
	Band2/50%RB#49	Right Tilted	18900	1880	21.89	-0.07	22.5	0.576	1.151	0.663
	Band2/100%RB#0	Right Tilted	19100	1900	21.90	-0.11	22.5	0.726	1.148	0.833
ANSI / IEEE C95.1 – SAFETY LIMIT Spatial Peak Uncontrolled Exposure/General Population					**1.6 W/kg (mW/g) Averaged over 1g**					

➢ FDD-LTE Band 4(20MHz) QPSK Head SAR

Plot No.	Band/Mode	Test Position	CH.	Freq. (MHz)	Output Power (dBm)	Power Drift (dB)	Tune-Up Limit (dBm)	Meas. SAR_{1g} (W/kg)	Scaling Factor	Reported SAR_{1g} (W/kg)
	Band4/1RB#0	Right Cheek	20300	1745	22.92	0.05	23.5	0.525	1.143	0.600
	Band4/1RB#0	Right Tilted	20300	1745	22.92	0.00	23.5	0.712	1.143	0.814
	Band4/1RB#0	Left Cheek	20300	1745	22.92	-0.16	23.5	0.422	1.143	0.482
	Band4/1RB#0	Left Tilted	20300	1745	22.92	-0.15	23.5	0.601	1.143	0.687
	Band4/1RB#0	Right Tilted	20050	1720	22.92	0.15	23.5	0.500	1.143	0.572
7	Band4/1RB#99	Right Tilted	20175	1732.5	22.49	-0.05	23.5	**0.663**	1.262	0.837
	Band4/50%RB#0	Right Cheek	20300	1745	21.65	0.10	22.0	0.495	1.084	0.537
	Band4/50%RB#0	Right Tilted	20300	1745	21.65	0.19	22.0	0.689	1.084	0.747
	Band4/50%RB#0	Left Cheek	20300	1745	21.65	0.08	22.0	0.356	1.084	0.386
	Band4/50%RB#0	Left Tilted	20300	1745	21.65	0.03	22.0	0.571	1.084	0.619
	Band4/100%RB#0	Right Tilted	20300	1745	21.58	-0.05	22.0	0.658	1.102	0.725
ANSI / IEEE C95.1 – SAFETY LIMIT Spatial Peak Uncontrolled Exposure/General Population					**1.6 W/kg (mW/g) Averaged over 1g**					

➢ FDD-LTE Band 5(10MHz) QPSK Head SAR

Plot No.	Band/Mode	Test Position	CH.	Freq. (MHz)	Output Power (dBm)	Power Drift (dB)	Tune-Up Limit (dBm)	Meas. SAR_{1g} (W/kg)	Scaling Factor	Reported SAR_{1g} (W/kg)
	Band5/1RB#49	Right Cheek	20525	836.5	23.38	-0.04	24.0	0.576	1.153	0.664
8	Band5/1RB#49	Right Tilted	20525	836.5	23.38	0.07	24.0	**0.605**	1.153	0.698
	Band5/1RB#49	Left Cheek	20525	836.5	23.38	0.02	24.0	0.510	1.153	0.588
	Band5/1RB#49	Left Tilted	20525	836.5	23.38	-0.04	24.0	0.500	1.153	0.577
	Band5/50%RB#24	Right Cheek	20525	836.5	22.28	0.09	22.5	0.565	1.052	0.594
	Band5/50%RB#24	Right Tilted	20525	836.5	22.28	0.05	22.5	0.484	1.052	0.509
	Band5/50%RB#24	Left Cheek	20525	836.5	22.28	-0.04	22.5	0.485	1.052	0.510
	Band5/50%RB#24	Left Tilted	20525	836.5	22.28	0.02	22.5	0.421	1.052	0.443
ANSI / IEEE C95.1 – SAFETY LIMIT Spatial Peak Uncontrolled Exposure/General Population					**1.6 W/kg (mW/g) Averaged over 1g**					

➢ FDD-LTE Band 7(20MHz) QPSK Head SAR

Plot No.	Band/Mode	Test Position	CH.	Freq. (MHz)	Output Power (dBm)	Power Drift (dB)	Tune-Up Limit (dBm)	Meas. SAR_{1g} (W/kg)	Scaling Factor	Reported SAR_{1g} (W/kg)
	Band7/1RB#49	Right Cheek	20850	2510	22.43	-0.13	23.0	0.324	1.14	0.369
	Band7/1RB#49	Right Tilted	20850	2510	22.43	0.11	23.0	0.628	1.14	0.716
	Band7/1RB#49	Left Cheek	20850	2510	22.43	-0.08	23.0	0.388	1.14	0.442
	Band7/1RB#49	Left Tilted	20850	2510	22.43	-0.08	23.0	0.513	1.14	0.585
	Band7/50%RB#0	Right Cheek	20850	2510	21.41	0.09	21.5	0.300	1.021	0.306
9	Band7/50%RB#0	Right Tilted	20850	2510	21.41	0.05	21.5	**0.714**	1.021	0.729
	Band7/50%RB#0	Left Cheek	20850	2510	21.41	0.03	21.5	0.222	1.021	0.227
	Band7/50%RB#0	Left Tilted	20850	2510	21.41	-0.11	21.5	0.571	1.021	0.583
ANSI / IEEE C95.1 – SAFETY LIMIT Spatial Peak Uncontrolled Exposure/General Population					**1.6 W/kg (mW/g) Averaged over 1g**					

➢ FDD-LTE Band 12(10MHz) QPSK Head SAR

Plot No.	Band/Mode	Test Position	CH.	Freq. (MHz)	Output Power (dBm)	Power Drift (dB)	Tune-Up Limit (dBm)	Meas. SAR_{1g} (W/kg)	Scaling Factor	Reported SAR_{1g} (W/kg)
	Band12/1RB#49	Right Cheek	23095	707.5	23.31	-0.04	23.5	0.336	1.045	0.351
10	Band12/1RB#49	Right Tilted	23095	707.5	23.31	-0.02	23.5	**0.392**	1.045	0.410
	Band12/1RB#49	Left Cheek	23095	707.5	23.31	-0.12	23.5	0.275	1.045	0.287
	Band12/1RB#49	Left Tilted	23095	707.5	23.31	-0.01	23.5	0.292	1.045	0.305
	Band12/50%RB#0	Right Cheek	23060	704	22.12	-0.03	22.5	0.269	1.091	0.293
	Band12/50%RB#0	Right Tilted	23060	704	22.12	0.06	22.5	0.280	1.091	0.305
	Band12/50%RB#0	Left Cheek	23060	704	22.12	-0.04	22.5	0.228	1.091	0.249
	Band12/50%RB#0	Left Tilted	23060	704	22.12	0.20	22.5	0.241	1.091	0.263
ANSI / IEEE C95.1 – SAFETY LIMIT Spatial Peak Uncontrolled Exposure/General Population					**1.6 W/kg (mW/g) Averaged over 1g**					

➢ FDD-LTE Band 17(10MHz) QPSK Head SAR

Plot No.	Band/Mode	Test Position	CH.	Freq. (MHz)	Output Power (dBm)	Power Drift (dB)	Tune-Up Limit (dBm)	Meas. SAR_{1g} (W/kg)	Scaling Factor	Reported SAR_{1g} (W/kg)
	Band17/1RB#0	Right Cheek	23790	710	23.20	0.03	23.5	0.335	1.072	0.359
11	Band17/1RB#0	Right Tilted	23790	710	23.20	0.01	23.5	**0.434**	1.072	0.465
	Band17/1RB#0	Left Cheek	23790	710	23.20	0.00	23.5	0.170	1.072	0.182
	Band17/1RB#0	Left Tilted	23790	710	23.20	0.18	23.5	0.239	1.072	0.256
	Band17/50%RB#0	Right Cheek	23780	709	22.15	0.09	22.5	0.263	1.084	0.285
	Band17/50%RB#0	Right Tilted	23780	709	22.15	0.01	22.5	0.320	1.084	0.347
	Band17/50%RB#0	Left Cheek	23780	709	22.15	-0.20	22.5	0.200	1.084	0.217
	Band17/50%RB#0	Left Tilted	23780	709	22.15	0.15	22.5	0.284	1.084	0.308
ANSI / IEEE C95.1 – SAFETY LIMIT Spatial Peak Uncontrolled Exposure/General Population					**1.6 W/kg (mW/g) Averaged over 1g**					

➢ FDD-LTE Band 26(15MHz) QPSK Head SAR

Plot No.	Band/Mode	Test Position	CH.	Freq. (MHz)	Output Power (dBm)	Power Drift (dB)	Tune-Up Limit (dBm)	Meas. SAR_{1g} (W/kg)	Scaling Factor	Reported SAR_{1g} (W/kg)
12	Band26/1RB#37	Right Cheek	26865	831.5	23.17	0.18	24.0	**0.605**	1.211	0.733
	Band26/1RB#37	Right Tilted	26865	831.5	23.17	0.03	24.0	0.509	1.211	0.616
	Band26/1RB#37	Left Cheek	26865	831.5	23.17	-0.02	24.0	0.265	1.211	0.321
	Band26/1RB#37	Left Tilted	26865	831.5	23.17	0.16	24.0	0.219	1.211	0.265
	Band26/50%RB#16	Right Cheek	26865	831.5	22.47	0.15	23.0	0.511	1.13	0.577

	Band26/50%RB#16	Right Tilted	26865	831.5	22.47	0.03	23.0	0.405	1.13	0.458
	Band26/50%RB#16	Left Cheek	26865	831.5	22.47	-0.03	23.0	0.220	1.13	0.249
	Band26/50%RB#16	Left Tilted	26865	831.5	22.47	-0.07	23.0	0.171	1.13	0.193
ANSI / IEEE C95.1 – SAFETY LIMIT Spatial Peak Uncontrolled Exposure/General Population					**1.6 W/kg (mW/g) Averaged over 1g**					

➢ TDD-LTE Band38(20MHz) QPSK Head SAR

Plot No.	Band/Mode	Test Position	CH.	Freq. (MHz)	Output Power (dBm)	Power Drift (dB)	Tune-Up Limit (dBm)	Meas. SAR_{1g} (W/kg)	Scaling Factor	D.C Factor	Reported SAR_{1g} (W/kg)
13	Band38/1RB#99	Right Cheek	37850	2580	22.48	-0.02	23.5	**0.402**	1.265	1.008	0.513
	Band38/1RB#99	Right Tilted	37850	2580	22.48	-0.09	23.5	0.122	1.265	1.008	0.156
	Band38/1RB#99	Left Cheek	37850	2580	22.48	-0.04	23.5	0.127	1.265	1.008	0.162
	Band38/1RB#99	Left Tilted	37850	2580	22.48	0.08	23.5	0.087	1.265	1.008	0.111
	Band38/50%RB#24	Right Cheek	38000	2595	21.86	0.19	22.0	0.408	1.033	1.008	0.425
	Band38/50%RB#24	Right Tilted	38000	2595	21.86	0.00	22.0	0.082	1.033	1.008	0.085
	Band38/50%RB#24	Left Cheek	38000	2595	21.86	0.05	22.0	0.112	1.033	1.008	0.117
	Band38/50%RB#24	Left Tilted	38000	2595	21.86	0.11	22.0	0.053	1.033	1.008	0.055

➢ TDD-LTE Band41(20MHz) QPSK Head SAR

Plot No.	Band/Mode	Test Position	CH.	Freq. (MHz)	Output Power (dBm)	Power Drift (dB)	Tune-Up Limit (dBm)	Meas. SAR_{1g} (W/kg)	Scaling Factor	D.C Factor	Reported SAR_{1g} (W/kg)
	Band41/1RB#99	Right Cheek	41140	2645	22.45	0.07	23.5	0.266	1.274	1.008	0.342
	Band41/1RB#99	Right Tilted	41140	2645	22.45	0.16	23.5	0.067	1.274	1.008	0.086
	Band41/1RB#99	Left Cheek	41140	2645	22.45	-0.05	23.5	0.151	1.274	1.008	0.194
	Band41/1RB#99	Left Tilted	41140	2645	22.45	0.10	23.5	0.041	1.274	1.008	0.053
14	Band41/50%RB#24	Right Cheek	40640	2595	21.94	0.12	22.5	**0.360**	1.138	1.008	0.413
	Band41/50%RB#24	Right Tilted	40640	2595	21.94	-0.19	22.5	0.084	1.138	1.008	0.096
	Band41/50%RB#24	Left Cheek	40640	2595	21.94	-0.09	22.5	0.194	1.138	1.008	0.223
	Band41/50%RB#24	Left Tilted	40640	2595	21.94	-0.09	22.5	0.049	1.138	1.008	0.056
ANSI / IEEE C95.1 – SAFETY LIMIT Spatial Peak Uncontrolled Exposure/General Population					**1.6 W/kg (mW/g) Averaged over 1g**					

➢ FDD-LTE Band 66(20MHz) QPSK Head SAR

Plot No.	Band/Mode	Test Position	CH.	Freq. (MHz)	Output Power (dBm)	Power Drift (dB)	Tune-Up Limit (dBm)	Meas. SAR_{1g} (W/kg)	Scaling Factor	Reported SAR_{1g} (W/kg)
	Band66/1RB#0	Right Cheek	132072	1720	22.91	-0.06	23.5	0.457	1.146	0.524
15	Band66/1RB#0	Right Tilted	132072	1720	22.91	0.09	23.5	**0.461**	1.146	0.528
	Band66/1RB#0	Left Cheek	132072	1720	22.91	-0.01	23.5	0.261	1.146	0.299
	Band66/1RB#0	Left Tilted	132072	1720	22.91	-0.11	23.5	0.277	1.146	0.317
	Band66/50%RB#0	Right Cheek	132322	1745	21.79	0.03	22.0	0.476	1.05	0.500
	Band66/50%RB#0	Right Tilted	132322	1745	21.79	0.08	22.0	0.484	1.05	0.508
	Band66/50%RB#0	Left Cheek	132322	1745	21.79	0.04	22.0	0.284	1.05	0.298
	Band66/50%RB#0	Left Tilted	132322	1745	21.79	0.03	22.0	0.294	1.05	0.309
ANSI / IEEE C95.1 – SAFETY LIMIT Spatial Peak Uncontrolled Exposure/General Population					**1.6 W/kg (mW/g) Averaged over 1g**					

➢ WLAN 2.4 GHz Head SAR

Plot No.	Band/Mode	Test Position	CH.	Freq. (MHz)	Output Power (dBm)	Power Drift (dB)	Tune-Up Limit (dBm)	Meas. SAR_{1g} (W/kg)	Scaling Factor	D.C Factor	Reported SAR_{1g} (W/kg)
	2.4GHz/802.11b	Right Cheek	6	2437	17.52	0.15	18.0	0.154	1.117	1.021	0.176
	2.4GHz/802.11b	Right Tilted	6	2437	17.52	-0.04	18.0	0.124	1.117	1.021	0.141
16	2.4GHz/802.11b	Left Cheek	6	2437	17.52	0.03	18.0	**0.292**	1.117	1.021	0.333
	2.4GHz/802.11b	Left Tilted	6	2437	17.52	0.04	18.0	0.254	1.117	1.021	0.290
ANSI / IEEE C95.1 – SAFETY LIMIT Spatial Peak Uncontrolled Exposure/General Population					**1.6 W/kg (mW/g) Averaged over 1g**						

➢ WLAN 5.2 GHz Head SAR

Plot No.	Band/Mode	Test Position	CH.	Freq. (MHz)	Output Power (dBm)	Power Drift (dB)	Tune-Up Limit (dBm)	Meas. SAR_{1g} (W/kg)	Scaling Factor	D.C Factor	Reported SAR_{1g} (W/kg)
	5.2GHz/802.11a	Right Cheek	48	5240	16.25	-0.10	16.5	0.168	1.059	1.135	0.202
	5.2GHz/802.11a	Right Tilted	48	5240	16.25	0.13	16.5	0.217	1.059	1.135	0.261
	5.2GHz/802.11a	Left Cheek	48	5240	16.25	0.00	16.5	0.141	1.059	1.135	0.169
17	5.2GHz/802.11a	Left Tilted	48	5240	16.25	-0.09	16.5	**0.266**	1.059	1.135	0.320
ANSI / IEEE C95.1 – SAFETY LIMIT Spatial Peak Uncontrolled Exposure/General Population					**1.6 W/kg (mW/g) Averaged over 1g**						

➢ WLAN 5.3 GHz Head SAR

Plot No.	Band/Mode	Test Position	CH.	Freq. (MHz)	Output Power (dBm)	Power Drift (dB)	Tune-Up Limit (dBm)	Meas. SAR_{1g} (W/kg)	Scaling Factor	D.C Factor	Reported SAR_{1g} (W/kg)
	5.3GHz/802.11a	Right Cheek	52	5260	15.15	-0.05	15.5	0.115	1.084	1.129	0.141
	5.3GHz/802.11a	Right Tilted	52	5260	15.15	-0.01	15.5	0.118	1.084	1.129	0.144
	5.3GHz/802.11a	Left Cheek	52	5260	15.15	0.00	15.5	0.157	1.084	1.129	0.192
18	5.3GHz/802.11a	Left Tilted	52	5260	15.15	0.08	15.5	**0.288**	1.084	1.129	0.352
ANSI / IEEE C95.1 – SAFETY LIMIT Spatial Peak Uncontrolled Exposure/General Population					**1.6 W/kg (mW/g) Averaged over 1g**						

➢ WLAN 5.6 GHz Head SAR

Plot No.	Band/Mode	Test Position	CH.	Freq. (MHz)	Output Power (dBm)	Power Drift (dB)	Tune-Up Limit (dBm)	Meas. SAR_{1g} (W/kg)	Scaling Factor	D.C Factor	Reported SAR_{1g} (W/kg)
	5.6GHz/802.11a	Right Cheek	100	5500	15.95	0.00	16.5	0.218	1.135	1.126	0.279
	5.6GHz/802.11a	Right Tilted	100	5500	15.95	-0.05	16.5	0.195	1.135	1.126	0.249
	5.6GHz/802.11a	Left Cheek	100	5500	15.95	0.00	16.5	0.198	1.135	1.126	0.253
19	5.6GHz/802.11a	Left Tilted	100	5500	15.95	0.13	16.5	**0.344**	1.135	1.126	0.440
ANSI / IEEE C95.1 – SAFETY LIMIT Spatial Peak Uncontrolled Exposure/General Population					**1.6 W/kg (mW/g) Averaged over 1g**						

➢ WLAN 5.8 GHz Head SAR

Plot No.	Band/Mode	Test Position	CH.	Freq. (MHz)	Output Power (dBm)	Power Drift (dB)	Tune-Up Limit (dBm)	Meas. SAR_{1g} (W/kg)	Scaling Factor	D.C Factor	Reported SAR_{1g} (W/kg)
	5.8GHz/802.11a	Right Cheek	157	5785	15.18	0.02	15.5	0.224	1.076	1.124	0.271
	5.8GHz/802.11a	Right Tilted	157	5785	15.18	0.03	15.5	0.199	1.076	1.124	0.241
20	5.8GHz/802.11a	Left Cheek	157	5785	15.18	0.00	15.5	**0.349**	1.076	1.124	0.422

	5.8GHz/802.11a	Left Tilted	157	5785	15.18	0.07	15.5	0.232	1.076	1.124	0.281
ANSI / IEEE C95.1 – SAFETY LIMIT Spatial Peak Uncontrolled Exposure/General Population					**1.6 W/kg (mW/g) Averaged over 1g**						

Note:

1. Per KDB 447498 D01v06, for each exposure position, if the highest output power channel Reported SAR ≤ 0.8W/kg, other channels SAR testing is not necessary.
2. Per KDB 865664 D01v01r04, for each frequency band, repeated SAR measurement is required when the measured SAR is ≥ 0.8W/kg.
3. Per KDB 941225 D05v02r05, 100% RB allocation SAR measurement is not required when the highest reported SAR for 1 RB and 50% RB allocation are ≤ 0.8 W/kg.
4. Per KDB 248227 D01v02r02, for 802.11b DSSS , when the reported SAR of the highest measured maximum output power channel for the exposure configuration is ≤ 0.8 W/kg, no further SAR testing is required in that exposure configuration.
5. Per KDB 248227 D01v02r02, OFDM SAR is not required when the highest reported SAR for DSSS is adjusted by the ratio of OFDM to DSSS specified maximum output power and the adjusted SAR is ≤ 1.2 W/kg. Cuz the maximum output power specified for OFDM and DSSS are 31.62mW(15.0dBm) and 56.23mW(17.5dBm), the scaled SAR would be 0.757×(31.62/56.23)=0.426W/Kg<1.2 W/kg, therefore, SAR is not required for OFDM.
6. According to KDB 865664 D02v01r02, SAR plot is required for the highest measured SAR in each exposure configuration, wireless mode and frequency band combination
7. Highlight part of test data means repeated test.
8. *: Due the antenna location and antenna performance results the SAR value lower than the lowest system limit, then we show "<0.001* W/Kg" in the report.

12.2.2 Standalone Body SAR

➢ GSM Body SAR

Plot No.	Band/Mode	Test Position	CH.	Freq. (MHz)	Output Power (dBm)	Power Drift (dB)	Tune-Up Limit (dBm)	Meas. SAR_{1g} (W/kg)	Scaling Factor	Reported SAR_{1g} (W/kg)
	GPRS850/3 slots	Front	190	836.6	28.69	-0.10	29.0	0.298	1.074	0.320
21	GPRS850/3 slots	Back	190	836.6	28.69	0.05	29.0	**0.391**	1.074	0.420
	GPRS1900/3 slots	Front	810	1909.8	25.45	0.02	26.0	0.231	1.135	0.262
22	GPRS1900/3 slots	Back	810	1909.8	25.45	-0.07	26.0	**0.377**	1.135	0.428
ANSI / IEEE C95.1 – SAFETY LIMIT Spatial Peak Uncontrolled Exposure/General Population					**1.6 W/kg (mW/g) Averaged over 1g**					

➢ WCDMA Body SAR

Plot No.	Band/Mode	Test Position	CH.	Freq. (MHz)	Output Power (dBm)	Power Drift (dB)	Tune-Up Limit (dBm)	Meas. SAR_{1g} (W/kg)	Scaling Factor	Reported SAR_{1g} (W/kg)
	Band II/RMC	Front	9538	1907.6	21.94	0.00	22.5	0.137	1.138	0.156
23	Band II/RMC	Back	9538	1907.6	21.94	-0.19	22.5	**0.176**	1.138	0.200
	Band IV/RMC	Front	1312	1712.4	21.97	-0.17	22.5	0.110	1.130	0.124
24	Band IV/RMC	Back	1312	1712.4	21.97	-0.08	22.5	**0.116**	1.130	0.131
	Band V/RMC	Front	4183	836.6	22.77	-0.12	23.0	0.130	1.054	0.137
25	Band V/RMC	Back	4183	836.6	22.77	0.02	23.0	**0.185**	1.054	0.195
ANSI / IEEE C95.1 – SAFETY LIMIT Spatial Peak Uncontrolled Exposure/General Population					**1.6 W/kg (mW/g) Averaged over 1g**					

➢ FDD-LTE Band 2(20MHz) QPSK Body SAR

Plot No.	Band/Mode	Test Position	CH.	Freq. (MHz)	Output Power (dBm)	Power Drift (dB)	Tune-Up Limit (dBm)	Meas. SAR_{1g} (W/kg)	Scaling Factor	Reported SAR_{1g} (W/kg)
	Band2/1RB#49	Front	19100	1900	23.08	0.13	23.5	0.184	1.102	0.203
	Band2/1RB#49	Back	19100	1900	23.08	0.04	23.5	0.176	1.102	0.194
	Band2/50%RB#0	Front	19100	1900	21.98	0.12	22.5	0.172	1.127	0.194
26	Band2/50%RB#0	Back	19100	1900	21.98	-0.11	22.5	**0.224**	1.127	0.252
ANSI / IEEE C95.1 – SAFETY LIMIT Spatial Peak Uncontrolled Exposure/General Population					**1.6 W/kg (mW/g) Averaged over 1g**					

➢ FDD-LTE Band 4(20MHz) QPSK Body SAR

Plot No.	Band/Mode	Test Position	CH.	Freq. (MHz)	Output Power (dBm)	Power Drift (dB)	Tune-Up Limit (dBm)	Meas. SAR_{1g} (W/kg)	Scaling Factor	Reported SAR_{1g} (W/kg)
	Band4/1RB#0	Front	20300	1745	22.92	-0.06	23.5	0.127	1.143	0.145
27	Band4/1RB#0	Back	20300	1745	22.92	0.01	23.5	**0.158**	1.143	0.181
	Band4/50%RB#0	Front	20300	1745	21.65	0.01	22.0	0.123	1.084	0.133
	Band4/50%RB#0	Back	20300	1745	21.65	-0.14	22.0	0.151	1.084	0.164
ANSI / IEEE C95.1 – SAFETY LIMIT Spatial Peak Uncontrolled Exposure/General Population					**1.6 W/kg (mW/g) Averaged over 1g**					

➢ FDD-LTE Band 5(10MHz) QPSK Body SAR

Plot No.	Band/Mode	Test Position	CH.	Freq. (MHz)	Output Power (dBm)	Power Drift (dB)	Tune-Up Limit (dBm)	Meas. SAR_{1g} (W/kg)	Scaling Factor	Reported SAR_{1g} (W/kg)
	Band5/1RB#49	Front	20525	836.5	23.38	-0.08	24.0	0.144	1.153	0.166
28	Band5/1RB#49	Back	20525	836.5	23.38	-0.13	24.0	**0.158**	1.153	0.182
	Band5/50%RB#24	Front	20525	836.5	22.28	0.15	22.5	0.132	1.052	0.139
	Band5/50%RB#24	Back	20525	836.5	22.28	0.02	22.5	0.140	1.052	0.147
ANSI / IEEE C95.1 – SAFETY LIMIT Spatial Peak Uncontrolled Exposure/General Population					**1.6 W/kg (mW/g) Averaged over 1g**					

➢ FDD-LTE Band 7(20MHz) QPSK Body SAR

Plot No.	Band/Mode	Test Position	CH.	Freq. (MHz)	Output Power (dBm)	Power Drift (dB)	Tune-Up Limit (dBm)	Meas. SAR_{1g} (W/kg)	Scaling Factor	Reported SAR_{1g} (W/kg)
	Band7/1RB#49	Front	20850	2510	22.43	0.03	23.0	0.026	1.140	0.030
	Band7/1RB#49	Back	20850	2510	22.43	-0.01	23.0	0.071	1.140	0.081
	Band7/50%RB#0	Front	20850	2510	21.41	-0.03	22.0	0.029	1.146	0.034
29	Band7/50%RB#0	Back	20850	2510	21.41	0.09	22.0	**0.085**	1.146	0.097
ANSI / IEEE C95.1 – SAFETY LIMIT Spatial Peak Uncontrolled Exposure/General Population					**1.6 W/kg (mW/g) Averaged over 1g**					

➢ FDD-LTE Band 12(10MHz) QPSK Body SAR

Plot No.	Band/Mode	Test Position	CH.	Freq. (MHz)	Output Power (dBm)	Power Drift (dB)	Tune-Up Limit (dBm)	Meas. SAR_{1g} (W/kg)	Scaling Factor	Reported SAR_{1g} (W/kg)
	Band12/1RB#49	Front	23095	707.5	23.31	-0.01	23.5	0.110	1.045	0.115
30	Band12/1RB#49	Back	23095	707.5	23.31	0.07	23.5	**0.164**	1.045	0.171
	Band12/50%RB#0	Front	23060	704	22.12	0.01	22.5	0.098	1.091	0.107
	Band12/50%RB#0	Back	23060	704	22.12	0.00	22.5	0.139	1.091	0.152
ANSI / IEEE C95.1 – SAFETY LIMIT Spatial Peak Uncontrolled Exposure/General Population					**1.6 W/kg (mW/g) Averaged over 1g**					

➢ FDD-LTE Band 17(10MHz) QPSK Body SAR

Plot No.	Band/Mode	Test Position	CH.	Freq. (MHz)	Output Power (dBm)	Power Drift (dB)	Tune-Up Limit (dBm)	Meas. SAR_{1g} (W/kg)	Scaling Factor	Reported SAR_{1g} (W/kg)
	Band17/1RB#0	Front	23790	710	23.20	-0.07	23.5	0.123	1.072	0.132
31	Band17/1RB#0	Back	23790	710	23.20	-0.02	23.5	**0.172**	1.072	0.184
	Band17/50%RB#0	Front	23780	709	22.15	0.09	22.5	0.102	1.084	0.111
	Band17/50%RB#0	Back	23780	709	22.15	0.01	22.5	0.140	1.084	0.152
ANSI / IEEE C95.1 – SAFETY LIMIT Spatial Peak Uncontrolled Exposure/General Population					**1.6 W/kg (mW/g) Averaged over 1g**					

➢ FDD-LTE Band 26(15MHz) QPSK Body SAR

Plot No.	Band/Mode	Test Position	CH.	Freq. (MHz)	Output Power (dBm)	Power Drift (dB)	Tune-Up Limit (dBm)	Meas. SAR_{1g} (W/kg)	Scaling Factor	Reported SAR_{1g} (W/kg)
	Band26/1RB#37	Front	26865	831.5	23.17	-0.02	24.0	0.148	1.211	0.179
32	Band26/1RB#37	Back	26865	831.5	23.17	0.02	24.0	**0.165**	1.211	0.200
	Band26/50%RB#16	Front	26865	831.5	22.47	0.01	23.0	0.125	1.130	0.141
	Band26/50%RB#16	Back	26865	831.5	22.47	0.06	23.0	0.162	1.130	0.183
ANSI / IEEE C95.1 – SAFETY LIMIT Spatial Peak Uncontrolled Exposure/General Population					**1.6 W/kg (mW/g) Averaged over 1g**					

➢ TDD-LTE Band 38(20MHz) QPSK Body SAR

Plot No.	Band/Mode	Test Position	CH.	Freq. (MHz)	Output Power (dBm)	Power Drift (dB)	Tune-Up Limit (dBm)	Meas. SAR_{1g} (W/kg)	Scaling Factor	D.C Factor	Reported SAR_{1g} (W/kg)
	Band38/1RB#99	Front	37850	2580	22.48	-0.11	23.5	0.113	1.265	1.008	0.144
33	Band38/1RB#99	Back	37850	2580	22.48	0.03	23.5	**0.283**	1.265	1.008	0.361
	Band38/50%RB#24	Front	38000	2595	21.86	0.03	22.0	0.110	1.033	1.008	0.115
	Band38/50%RB#24	Back	38000	2595	21.86	0.04	22.0	0.302	1.033	1.008	0.314
ANSI / IEEE C95.1 – SAFETY LIMIT Spatial Peak Uncontrolled Exposure/General Population					**1.6 W/kg (mW/g) Averaged over 1g**						

➢ TDD-LTE Band 41(20MHz) QPSK Body SAR

Plot No.	Band/Mode	Test Position	CH.	Freq. (MHz)	Output Power (dBm)	Power Drift (dB)	Tune-Up Limit (dBm)	Meas. SAR_{1g} (W/kg)	Scaling Factor	D.C Factor	Reported SAR_{1g} (W/kg)
	Band41/1RB#99	Front	41140	2645	22.45	-0.06	23.5	0.079	1.274	1.008	0.102
	Band41/1RB#99	Back	41140	2645	22.45	-0.17	23.5	0.257	1.274	1.008	0.330
	Band41/50%RB#24	Front	40640	2595	21.94	-0.01	22.5	0.085	1.138	1.008	0.098
34	Band41/50%RB#24	Back	40640	2595	21.94	-0.05	22.5	**0.336**	1.138	1.008	0.385
ANSI / IEEE C95.1 – SAFETY LIMIT Spatial Peak Uncontrolled Exposure/General Population					**1.6 W/kg (mW/g) Averaged over 1g**						

➢ FDD-LTE Band 66(20MHz) QPSK Body SAR

Plot No.	Band/Mode	Test Position	CH.	Freq. (MHz)	Output Power (dBm)	Power Drift (dB)	Tune-Up Limit (dBm)	Meas. SAR_{1g} (W/kg)	Scaling Factor	Reported SAR_{1g} (W/kg)
	Band66/1RB#0	Front	132072	1720	22.91	0.02	23.5	0.126	1.146	0.144
	Band66/1RB#0	Back	132072	1720	22.91	0.12	23.5	0.124	1.146	0.142
	Band66/50%RB#0	Front	132322	1745	21.79	0.14	22.0	0.129	1.050	0.135
35	Band66/50%RB#0	Back	132322	1745	21.79	-0.02	22.0	**0.140**	1.050	0.147
ANSI / IEEE C95.1 – SAFETY LIMIT Spatial Peak Uncontrolled Exposure/General Population					**1.6 W/kg (mW/g) Averaged over 1g**					

➢ WLAN 2.4GHz Body SAR

Plot No.	Band/Mode	Test Position	CH.	Freq. (MHz)	Output Power (dBm)	Power Drift (dB)	Tune-Up Limit (dBm)	Meas. SAR_{1g} (W/kg)	Scaling Factor	D.C Factor	Reported SAR_{1g} (W/kg)
	2.4GHz/802.11b	Front	6	2437	17.52	0.03	18.0	0.064	1.117	1.021	0.073
36	2.4GHz/802.11b	Back	6	2437	17.52	-0.04	18.0	**0.098**	1.117	1.021	0.112
ANSI / IEEE C95.1 – SAFETY LIMIT Spatial Peak Uncontrolled Exposure/General Population					**1.6 W/kg (mW/g) Averaged over 1g**						

➢ WLAN 5.2GHz Body SAR

Plot No.	Band/Mode	Test Position	CH.	Freq. (MHz)	Output Power (dBm)	Power Drift (dB)	Tune-Up Limit (dBm)	Meas. SAR_{1g} (W/kg)	Scaling Factor	D.C Factor	Reported SAR_{1g} (W/kg)
	5.2GHz/802.11a	Front	48	5240	16.25	0.00	16.5	0.039	1.059	1.135	0.047
37	5.2GHz/802.11a	Back	48	5240	16.25	-0.02	16.5	**0.206**	1.059	1.135	0.248
ANSI / IEEE C95.1 – SAFETY LIMIT Spatial Peak Uncontrolled Exposure/General Population					**1.6 W/kg (mW/g) Averaged over 1g**						

➢ WLAN 5.3GHz Body SAR

Plot No.	Band/Mode	Test Position	CH.	Freq. (MHz)	Output Power (dBm)	Power Drift (dB)	Tune-Up Limit (dBm)	Meas. SAR_{1g} (W/kg)	Scaling Factor	D.C Factor	Reported SAR_{1g} (W/kg)
	5.3GHz/802.11a	Front	52	5260	15.15	0.00	15.5	0.032	1.084	1.129	0.039
38	5.3GHz/802.11a	Back	52	5260	15.15	-0.12	15.5	**0.321**	1.084	1.129	0.393
ANSI / IEEE C95.1 – SAFETY LIMIT Spatial Peak Uncontrolled Exposure/General Population					**1.6 W/kg (mW/g) Averaged over 1g**						

➢ WLAN 5.6GHz Body SAR

Plot No.	Band/Mode	Test Position	CH.	Freq. (MHz)	Output Power (dBm)	Power Drift (dB)	Tune-Up Limit (dBm)	Meas. SAR_{1g} (W/kg)	Scaling Factor	D.C Factor	Reported SAR_{1g} (W/kg)
	5.6GHz/802.11a	Front	100	5500	15.95	0.00	16.5	0.048	1.135	1.126	0.061
39	5.6GHz/802.11a	Back	100	5500	15.95	-0.09	16.5	**0.436**	1.135	1.126	0.557
ANSI / IEEE C95.1 – SAFETY LIMIT Spatial Peak Uncontrolled Exposure/General Population					**1.6 W/kg (mW/g) Averaged over 1g**						

➢ WLAN 5.8GHz Wi-Fi Body SAR

Plot No.	Band/Mode	Test Position	CH.	Freq. (MHz)	Output Power (dBm)	Power Drift (dB)	Tune-Up Limit (dBm)	Meas. SAR_{1g} (W/kg)	Scaling Factor	D.C Factor	Reported SAR_{1g} (W/kg)
	5.8GHz/802.11a	Front	157	5785	15.18	-0.02	15.5	0.041	1.076	1.124	0.050
40	5.8GHz/802.11a	Back	157	5785	15.18	0.06	15.5	**0.408**	1.076	1.124	0.494
ANSI / IEEE C95.1 – SAFETY LIMIT Spatial Peak Uncontrolled Exposure/General Population					**1.6 W/kg (mW/g) Averaged over 1g**						

Note:

1. Body-worn SAR testing was performed at 10 mm separation, and this distance is determined by the handset manufacturer that there will be body-worn accessories that users may acquire at the time of equipment certification, to enable users to purchase aftermarket body-worn accessories with the required minimum separation.

2. Per KDB 941225 D06v02r01, when the same wireless modes and device transmission configurations are required for testing body-worn accessories and hotspot mode, it is not necessary to test body-worn accessory SAR for the same device orientation if the test separation distance for hotspot mode is more conservative than that used for body-worn accessories.
3. Body-worn exposure conditions are intended to voice call operations, therefore GSM voice call is selected to be tested.
4. Per KDB 648474 D04v01r03, when the *Reported* SAR for a body-worn accessory measured without a headset connected to the handset is ≤ 1.2 W/kg, SAR testing with a headset connected to the handset is not required.
5. The WLAN SAR perform the front and back position, due considered the simultaneous SAR for body-worn.
6. Per KDB 447498 D01v06, for each exposure position, if the highest output channel Reported SAR ≤0.8W/kg, other channels SAR testing is not necessary.
7. Per KDB 865664 D01v01r04, for each frequency band, repeated SAR measurement is required when the measured SAR is ≥0.8W/kg.
8. Per KDB 941225 D05v02r05, 100% RB allocation SAR measurement is not required when the highest reported SAR for 1 RB and 50% RB allocation are ≤ 0.8 W/kg.
9. According to KDB 865664 D02v01r02, SAR plot is required for the highest measured SAR in each exposure configuration, wireless mode and frequency band combination.
10. Highlight part of test data means repeated test.
11. *: Due the antenna location and antenna performance results the SAR value lower than the lowest system limit, then we show "<0.001* W/Kg" in the report.

12.2.3 Body SAR in Hotspot Mode

➢ GSM Body SAR in Hotspot mode

Plot No.	Band/Mode	Test Position	CH.	Freq. (MHz)	Output Power (dBm)	Power Drift (dB)	Tune-Up Limit (dBm)	Meas. SAR_{1g} (W/kg)	Scaling Factor	Reported SAR_{1g} (W/kg)
	GPRS850/3 slots	Front	190	836.6	28.69	-0.10	29.0	0.298	1.074	0.320
21	GPRS850/3 slots	Back	190	836.6	28.69	0.05	29.0	**0.391**	1.074	0.420
	GPRS850/3 slots	Left	190	836.6	28.69	0.15	29.0	0.236	1.074	0.253
	GPRS850/3 slots	Top	190	836.6	28.69	0.09	29.0	0.296	1.074	0.318
	GPRS1900/3 slots	Front	810	1909.8	25.45	0.02	26.0	0.231	1.135	0.262
	GPRS1900/3 slots	Back	810	1909.8	25.45	-0.07	26.0	0.377	1.135	0.428
	GPRS1900/3 slots	Left	810	1909.8	25.45	-0.13	26.0	0.168	1.135	0.191
41	GPRS1900/3 slots	Top	810	1909.8	25.45	0.03	26.0	**0.705**	1.135	0.800
	GPRS1900/3 slots	Top	512	1850.2	24.95	0.06	26.0	0.452	1.274	0.576
	GPRS1900/3 slots	Top	661	1880	25.41	0.03	26.0	0.528	1.146	0.605
ANSI / IEEE C95.1 – SAFETY LIMIT Spatial Peak Uncontrolled Exposure/General Population					**1.6 W/kg (mW/g) Averaged over 1g**					

➢ WCDMA Body SAR in Hotspot mode

Plot No.	Band/Mode	Test Position	CH.	Freq. (MHz)	Output Power (dBm)	Power Drift (dB)	Tune-Up Limit (dBm)	Meas. SAR_{1g} (W/kg)	Scaling Factor	Reported SAR_{1g} (W/kg)
	Band II/RMC	Front	9538	1907.6	21.94	0.00	22.5	0.137	1.138	0.156
	Band II/RMC	Back	9538	1907.6	21.94	-0.19	22.5	0.176	1.138	0.200
	Band II/RMC	Left	9538	1907.6	21.94	-0.11	22.5	0.015	1.138	0.017
42	Band II/RMC	Top	9538	1907.6	21.94	0.04	22.5	**0.270**	1.138	0.307
	Band IV/RMC	Front	1312	1712.4	21.97	-0.17	22.5	0.110	1.130	0.124
	Band IV/RMC	Back	1312	1712.4	21.97	-0.08	22.5	0.116	1.130	0.131
	Band IV/RMC	Left	1312	1712.4	21.97	-0.12	22.5	0.023	1.130	0.026
43	Band IV/RMC	Top	1312	1712.4	21.97	-0.07	22.5	**0.179**	1.130	0.202
	Band V/RMC	Front	4183	836.6	22.77	-0.12	23.0	0.130	1.054	0.137
	Band V/RMC	Back	4183	836.6	22.77	0.02	23.0	0.185	1.054	0.195
	Band V/RMC	Left	4183	836.6	22.77	0.06	23.0	0.074	1.054	0.078
44	Band V/RMC	Top	4183	836.6	22.77	-0.06	23.0	**0.195**	1.054	0.206
ANSI / IEEE C95.1 – SAFETY LIMIT Spatial Peak Uncontrolled Exposure/General Population					**1.6 W/kg (mW/g) Averaged over 1g**					

➢ FDD-LTE Band 2(20MHz) QPSK Body SAR in Hotspot mode

Plot No.	Band/Mode	Test Position	CH.	Freq. (MHz)	Output Power (dBm)	Power Drift (dB)	Tune-Up Limit (dBm)	Meas. SAR_{1g} (W/kg)	Scaling Factor	Reported SAR_{1g} (W/kg)
	Band2/1RB#49	Front	19100	1900	23.08	0.13	23.5	0.184	1.102	0.203
	Band2/1RB#49	Back	19100	1900	23.08	0.04	23.5	0.176	1.102	0.194
	Band2/1RB#49	Left	19100	1900	23.08	-0.09	23.5	0.067	1.102	0.074
45	Band2/1RB#49	Top	19100	1900	23.08	0.06	23.5	**0.358**	1.102	0.395
	Band2/50%RB#0	Front	19100	1900	21.98	0.12	22.5	0.172	1.127	0.194
	Band2/50%RB#0	Back	19100	1900	21.98	-0.11	22.5	0.224	1.127	0.252
	Band2/50%RB#0	Left	19100	1900	21.98	-0.01	22.5	0.061	1.127	0.069
	Band2/50%RB#0	Top	19100	1900	21.98	0.13	22.5	0.219	1.127	0.247
ANSI / IEEE C95.1 – SAFETY LIMIT Spatial Peak Uncontrolled Exposure/General Population					**1.6 W/kg (mW/g) Averaged over 1g**					

➢ FDD-LTE Band 4(20MHz) QPSK Body SAR in Hotspot mode

Plot No.	Band/Mode	Test Position	CH.	Freq. (MHz)	Output Power (dBm)	Power Drift (dB)	Tune-Up Limit (dBm)	Meas. SAR_{1g} (W/kg)	Scaling Factor	Reported SAR_{1g} (W/kg)
	Band4/1RB#0	Front	20300	1745	22.92	-0.06	23.5	0.127	1.143	0.145
	Band4/1RB#0	Back	20300	1745	22.92	0.01	23.5	0.158	1.143	0.181
	Band4/1RB#0	Left	20300	1745	22.92	0.04	23.5	0.054	1.143	0.062
46	Band4/1RB#0	Top	20300	1745	22.92	0.18	23.5	**0.258**	1.143	0.295
	Band4/50%RB#0	Front	20300	1745	21.65	0.01	22.0	0.123	1.084	0.133
	Band4/50%RB#0	Back	20300	1745	21.65	-0.14	22.0	0.151	1.084	0.164
	Band4/50%RB#0	Left	20300	1745	21.65	-0.03	22.0	0.049	1.084	0.053
	Band4/50%RB#0	Top	20300	1745	21.65	0.17	22.0	0.159	1.084	0.172
ANSI / IEEE C95.1 – SAFETY LIMIT Spatial Peak Uncontrolled Exposure/General Population					**1.6 W/kg (mW/g) Averaged over 1g**					

➢ FDD-LTE Band 5(10MHz) QPSK Body SAR in Hotspot mode

Plot No.	Band/Mode	Test Position	CH.	Freq. (MHz)	Output Power (dBm)	Power Drift (dB)	Tune-Up Limit (dBm)	Meas. SAR_{1g} (W/kg)	Scaling Factor	Reported SAR_{1g} (W/kg)
	Band5/1RB#49	Front	20525	836.5	23.38	-0.08	24.0	0.144	1.153	0.166
28	Band5/1RB#49	Back	20525	836.5	23.38	-0.13	24.0	**0.158**	1.153	0.182
	Band5/1RB#49	Left	20525	836.5	23.38	-0.09	24.0	0.064	1.153	0.073
	Band5/1RB#49	Top	20525	836.5	23.38	0.01	24.0	0.002	1.153	0.003
	Band5/50%RB#24	Front	20525	836.5	22.28	0.15	22.5	0.132	1.052	0.139
	Band5/50%RB#24	Back	20525	836.5	22.28	0.02	22.5	0.140	1.052	0.147
	Band5/50%RB#24	Left	20525	836.5	22.28	0.11	22.5	0.059	1.052	0.062
	Band5/50%RB#24	Top	20525	836.5	22.28	-0.05	22.5	0.001	1.052	0.001
ANSI / IEEE C95.1 – SAFETY LIMIT Spatial Peak Uncontrolled Exposure/General Population					**1.6 W/kg (mW/g) Averaged over 1g**					

➢ FDD-LTE Band 7(20MHz) QPSK Body SAR in Hotspot mode

Plot No.	Band/Mode	Test Position	CH.	Freq. (MHz)	Output Power (dBm)	Power Drift (dB)	Tune-Up Limit (dBm)	Meas. SAR_{1g} (W/kg)	Scaling Factor	Reported SAR_{1g} (W/kg)
	Band7/1RB#49	Front	20850	2510	22.43	0.03	23.0	0.026	1.140	0.030
	Band7/1RB#49	Back	20850	2510	22.43	-0.01	23.0	0.071	1.140	0.081
	Band7/1RB#49	Left	20850	2510	22.43	-0.03	23.0	0.054	1.140	0.061
47	Band7/1RB#49	Top	20850	2510	22.43	0.01	23.0	**0.499**	1.140	0.569
	Band7/50%RB#0	Front	20850	2510	21.41	-0.03	22.0	0.029	1.146	0.034
	Band7/50%RB#0	Back	20850	2510	21.41	0.09	22.0	0.085	1.146	0.097
	Band7/50%RB#0	Left	20850	2510	21.41	-0.11	22.0	0.053	1.146	0.060
	Band7/50%RB#0	Top	20850	2510	21.41	0.05	22.0	0.477	1.146	0.547
ANSI / IEEE C95.1 – SAFETY LIMIT Spatial Peak Uncontrolled Exposure/General Population					**1.6 W/kg (mW/g) Averaged over 1g**					

➢ FDD-LTE Band 12(10MHz) QPSK Body SAR in Hotspot mode

Plot No.	Band/Mode	Test Position	CH.	Freq. (MHz)	Output Power (dBm)	Power Drift (dB)	Tune-Up Limit (dBm)	Meas. SAR_{1g} (W/kg)	Scaling Factor	Reported SAR_{1g} (W/kg)
	Band12/1RB#49	Front	23095	707.5	23.31	-0.01	23.5	0.110	1.045	0.115
30	Band12/1RB#49	Back	23095	707.5	23.31	0.07	23.5	**0.164**	1.045	0.171
	Band12/1RB#49	Left	23095	707.5	23.31	-0.02	23.5	0.139	1.045	0.145
	Band12/1RB#49	Top	23095	707.5	23.31	0.00	23.5	0.004	1.045	0.005
	Band12/50%RB#0	Front	23060	704	22.12	0.01	22.5	0.098	1.091	0.107
	Band12/50%RB#0	Back	23060	704	22.12	0.00	22.5	0.139	1.091	0.152
	Band12/50%RB#0	Left	23060	704	22.12	-0.05	22.5	0.113	1.091	0.123
	Band12/50%RB#0	Top	23060	704	22.12	0.08	22.5	0.004	1.091	0.004
ANSI / IEEE C95.1 – SAFETY LIMIT Spatial Peak Uncontrolled Exposure/General Population					**1.6 W/kg (mW/g) Averaged over 1g**					

➢ FDD-LTE Band 17(10MHz) QPSK Body SAR in Hotspot mode

Plot No.	Band/Mode	Test Position	CH.	Freq. (MHz)	Output Power (dBm)	Power Drift (dB)	Tune-Up Limit (dBm)	Meas. SAR_{1g} (W/kg)	Scaling Factor	Reported SAR_{1g} (W/kg)
	Band17/1RB#0	Front	23790	710	23.20	-0.07	23.5	0.123	1.072	0.132
31	Band17/1RB#0	Back	23790	710	23.20	-0.02	23.5	**0.172**	1.072	0.184
	Band17/1RB#0	Left	23790	710	23.20	0.00	23.5	0.143	1.072	0.153
	Band17/1RB#0	Top	23790	710	23.20	0.01	23.5	0.115	1.072	0.123
	Band17/50%RB#0	Front	23780	709	22.15	0.09	22.5	0.102	1.084	0.111
	Band17/50%RB#0	Back	23780	709	22.15	0.01	22.5	0.140	1.084	0.152
	Band17/50%RB#0	Left	23780	709	22.15	0.00	22.5	0.119	1.084	0.129
	Band17/50%RB#0	Top	23780	709	22.15	0.01	22.5	0.092	1.084	0.100
ANSI / IEEE C95.1 – SAFETY LIMIT Spatial Peak Uncontrolled Exposure/General Population					**1.6 W/kg (mW/g) Averaged over 1g**					

➢ FDD-LTE Band 26(15MHz) QPSK Body SAR in Hotspot mode

Plot No.	Band/Mode	Test Position	CH.	Freq. (MHz)	Output Power (dBm)	Power Drift (dB)	Tune-Up Limit (dBm)	Meas. SAR_{1g} (W/kg)	Scaling Factor	Reported SAR_{1g} (W/kg)
	Band26/1RB#37	Front	26865	831.5	23.17	-0.02	24.0	0.148	1.211	0.179
	Band26/1RB#37	Back	26865	831.5	23.17	0.02	24.0	0.165	1.211	0.200
	Band26/1RB#37	Left	26865	831.5	23.17	0.04	24.0	0.047	1.211	0.056
48	Band26/1RB#37	Top	26865	831.5	23.17	0.09	24.0	**0.189**	1.211	0.229
	Band26/50%RB#16	Front	26865	831.5	22.47	0.01	23.0	0.125	1.130	0.141
	Band26/50%RB#16	Back	26865	831.5	22.47	0.06	23.0	0.162	1.130	0.183
	Band26/50%RB#16	Left	26865	831.5	22.47	-0.08	23.0	0.040	1.130	0.045
	Band26/50%RB#16	Top	26865	831.5	22.47	0.17	23.0	0.149	1.130	0.168
ANSI / IEEE C95.1 – SAFETY LIMIT Spatial Peak Uncontrolled Exposure/General Population					**1.6 W/kg (mW/g) Averaged over 1g**					

➢ TDD-LTE Band 38(20MHz) QPSK Body SAR in Hotspot mode

Plot No.	Band/Mode	Test Position	CH.	Freq. (MHz)	Output Power (dBm)	Power Drift (dB)	Tune-Up Limit (dBm)	Meas. SAR_{1g} (W/kg)	Scaling Factor	D.C Factor	Reported SAR_{1g} (W/kg)
	Band38/1RB#99	Front	37850	2580	22.48	-0.11	23.5	0.113	1.265	1.008	0.144
33	Band38/1RB#99	Back	37850	2580	22.48	0.03	23.5	**0.283**	1.265	1.008	0.361
	Band38/1RB#99	Left	37850	2580	22.48	-0.13	23.5	0.233	1.265	1.008	0.297
	Band38/1RB#99	Top	37850	2580	22.48	0.09	23.5	0.024	1.265	1.008	0.030
	Band38/50%RB#24	Front	38000	2595	21.86	0.03	22.0	0.110	1.033	1.008	0.115
	Band38/50%RB#24	Back	38000	2595	21.86	0.04	22.0	0.302	1.033	1.008	0.314
	Band38/50%RB#24	Left	38000	2595	21.86	0.01	22.0	0.251	1.033	1.008	0.261
	Band38/50%RB#24	Top	38000	2595	21.86	-0.03	22.0	0.021	1.033	1.008	0.022
ANSI / IEEE C95.1 – SAFETY LIMIT Spatial Peak Uncontrolled Exposure/General Population					**1.6 W/kg (mW/g) Averaged over 1g**						

➢ TDD-LTE Band 41(20MHz) QPSK Body SAR in Hotspot mode

Plot No.	Band/Mode	Test Position	CH.	Freq. (MHz)	Output Power (dBm)	Power Drift (dB)	Tune-Up Limit (dBm)	Meas. SAR_{1g} (W/kg)	Scaling Factor	D.C Factor	Reported SAR_{1g} (W/kg)
	Band41/1RB#99	Front	41140	2645	22.45	-0.06	23.5	0.079	1.274	1.008	0.102
	Band41/1RB#99	Back	41140	2645	22.45	-0.17	23.5	0.257	1.274	1.008	0.330
	Band41/1RB#99	Left	41140	2645	22.45	-0.16	23.5	0.031	1.274	1.008	0.040
	Band41/1RB#99	Top	41140	2645	22.45	0.04	23.5	0.017	1.274	1.008	0.022
	Band41/50%RB#24	Front	40640	2595	21.94	-0.01	22.5	0.085	1.138	1.008	0.098
34	Band41/50%RB#24	Back	40640	2595	21.94	-0.05	22.5	**0.336**	1.138	1.008	0.385
	Band41/50%RB#24	Left	40640	2595	21.94	-0.14	22.5	0.035	1.138	1.008	0.040
	Band41/50%RB#24	Top	40640	2595	21.94	0.04	22.5	0.019	1.138	1.008	0.022
ANSI / IEEE C95.1 – SAFETY LIMIT Spatial Peak Uncontrolled Exposure/General Population					**1.6 W/kg (mW/g) Averaged over 1g**						

➢ FDD-LTE Band 66(20MHz) QPSK Body SAR in Hotspot mode

Plot No.	Band/Mode	Test Position	CH.	Freq. (MHz)	Output Power (dBm)	Power Drift (dB)	Tune-Up Limit (dBm)	Meas. SAR_{1g} (W/kg)	Scaling Factor	Reported SAR_{1g} (W/kg)
	Band66/1RB#0	Front	132072	1720	22.91	0.02	23.5	0.126	1.146	0.144
	Band66/1RB#0	Back	132072	1720	22.91	0.12	23.5	0.124	1.146	0.142
	Band66/1RB#0	Left	132072	1720	22.91	-0.20	23.5	0.043	1.146	0.050
	Band66/1RB#0	Top	132072	1720	22.91	0.07	23.5	0.115	1.146	0.132
	Band66/50%RB#0	Front	132322	1745	21.79	0.14	22.0	0.129	1.050	0.135
	Band66/50%RB#0	Back	132322	1745	21.79	-0.02	22.0	0.140	1.050	0.147
	Band66/50%RB#0	Left	132322	1745	21.79	-0.01	22.0	0.045	1.050	0.048
49	Band66/50%RB#0	Top	132322	1745	21.79	0.02	22.0	**0.189**	1.050	0.198
ANSI / IEEE C95.1 – SAFETY LIMIT Spatial Peak Uncontrolled Exposure/General Population					**1.6 W/kg (mW/g) Averaged over 1g**					

➢ WLAN 2.4GHz Body SAR in Hotspot mode

Plot No.	Band/Mode	Test Position	CH.	Freq. (MHz)	Output Power (dBm)	Power Drift (dB)	Tune-Up Limit (dBm)	Meas. SAR_{1g} (W/kg)	Scaling Factor	D.C Factor	Reported SAR_{1g} (W/kg)
	2.4GHz/802.11b	Front	6	2437	17.52	0.03	18.0	0.064	1.117	1.021	0.073
36	2.4GHz/802.11b	Back	6	2437	17.52	-0.04	18.0	**0.098**	1.117	1.021	0.112
	2.4GHz/802.11b	Right	6	2437	17.52	-0.09	18.0	0.062	1.117	1.021	0.071
	2.4GHz/802.11b	Top	6	2437	17.52	-0.12	18.0	0.051	1.117	1.021	0.058
ANSI / IEEE C95.1 – SAFETY LIMIT Spatial Peak Uncontrolled Exposure/General Population					**1.6 W/kg (mW/g) Averaged over 1g**						

➢ WLAN 5.2GHz Body SAR in Hotspot mode

Plot No.	Band/Mode	Test Position	CH.	Freq. (MHz)	Output Power (dBm)	Power Drift (dB)	Tune-Up Limit (dBm)	Meas. SAR_{1g} (W/kg)	Scaling Factor	D.C Factor	Reported SAR_{1g} (W/kg)
	5.2GHz/802.11a	Front	48	5240	16.25	0.00	16.5	0.039	1.059	1.135	0.047
37	5.2GHz/802.11a	Back	48	5240	16.25	-0.02	16.5	**0.206**	1.059	1.135	0.248
	5.2GHz/802.11a	Right	48	5240	16.25	-0.15	16.5	0.098	1.059	1.135	0.118
	5.2GHz/802.11a	Top	48	5240	16.25	0.04	16.5	0.114	1.059	1.135	0.137
ANSI / IEEE C95.1 – SAFETY LIMIT Spatial Peak Uncontrolled Exposure/General Population					**1.6 W/kg (mW/g) Averaged over 1g**						

➢ WLAN 5.8GHz Body SAR in Hotspot mode

Plot No.	Band/Mode	Test Position	CH.	Freq. (MHz)	Output Power (dBm)	Power Drift (dB)	Tune-Up Limit (dBm)	Meas. SAR_{1g} (W/kg)	Scaling Factor	D.C Factor	Reported SAR_{1g} (W/kg)
	5.8GHz/802.11a	Front	157	5785	15.18	-0.02	15.5	0.041	1.076	1.124	0.050
40	5.8GHz/802.11a	Back	157	5785	15.18	0.06	15.5	**0.408**	1.076	1.124	0.494
	5.8GHz/802.11a	Right	157	5785	15.18	0.00	15.5	0.125	1.076	1.124	0.151
	5.8GHz/802.11a	Top	157	5785	15.18	-0.02	15.5	0.159	1.076	1.124	0.192
ANSI / IEEE C95.1 – SAFETY LIMIT Spatial Peak Uncontrolled Exposure/General Population					**1.6 W/kg (mW/g) Averaged over 1g**						

Note:

1. Per KDB 447498 D01v06, for each exposure position, if the highest output channel Reported SAR ≤0.8W/kg, other channels SAR testing is not necessary.
2. Additional WLAN SAR testing was performed for simultaneous transmission analysis.
3. For Hotspot SAR testing, per KDB 941225 D06v02r01, for EUT dimension ≥ 9cm*5cm, the test distance is 10mm. SAR must be

measured for all surfaces and sides with a transmitting antenna located within 2.5cm from that surface or edge.

4. Per KDB 941225 D01v03r01, RMC 12.2kbps setting is used to evaluate SAR. If HSDPA output power is < 0.25dB higher than RMC 12.2kbps, or Reported SAR with RMC 12.2kbps setting is ≤ 1.2W/kg, HSDPA SAR evaluation can be excluded.
5. Per KDB 865664 D01v01r04, for each frequency band, repeated SAR measurement is required when the measured SAR is ≥0.8W/kg.
6. Per KDB 648474 D04v01r03, when the Reported SAR for a body-worn accessory measured without a headset connected to the handset is > 1.2 W/kg, SAR testing with a headset connected to the handset is required.
7. Per KDB 941225 D05v02r05, 100% RB allocation SAR measurement is not required when the highest reported SAR for 1 RB and 50% RB allocation are ≤ 0.8 W/kg. Otherwise, SAR is measured for the highest output power channel.
8. According to KDB 865664 D02v01r02, SAR plot is required for the highest measured SAR in each exposure configuration, wireless mode and frequency band combination.
9. Highlight part of test data means repeated test.
10. *: Due the antenna location and antenna performance results the SAR value lower than the lowest system limit, then we show "<0.001* W/Kg" in the report.

12.3 Measurement variability consideration

In accordance with published RF Exposure KDB 865664 D01 SAR measurement 100 MHz to 6 GHz. These additional measurements are repeated after the completion of all measurements requiring the same head or body tissue-equivalent medium in a frequency band. The test device should be returned to ambient conditions (normal room temperature) with the battery fully charged before it is re-mounted on the device holder for the repeated measurement(s) to minimize any unexpected variations in the repeated results.

1. Repeated measurement is not required when the original highest measured SAR is < 0.8 or 2 W/kg (1-g or 10-g respectively); steps 2) through 4) do not apply.
2. When the original highest measured SAR is ≥ 0.8 or 2 W/kg (1-g or 10-g respectively), repeat that measurement once.
3. Perform a second repeated measurement only if the ratio of largest to smallest SAR for the original and first repeated measurements is > 1.20 or when the original or repeated measurement is ≥ 1.45 or 3.6 W/kg (~ 10% from the 1-g or 10-g respective SAR limit).
4. Perform a third repeated measurement only if the original, first, or second repeated measurement is ≥ 1.5 or 3.75 W/kg (1-g or 10-g respectively) and the ratio of largest to smallest SAR for the original, first and second repeated measurements is > 1.20.

12.4 Repeated SAR

Band/ Mode	Test Position	CH.	Freq. (MHz)	Measured SAR (W/kg)				
				Original	1st Repeated		2nd Repeated	
					Value	Ratio	Value	Ratio
PCS1900/Voice	Right Tilted	810	1909.8	1.030	0.989	1.041	/	/
Band2/50%RB#0	Right Tilted	19100	1900	0.821	0.799	1.028	/	/
ANSI / IEEE C95.1 – SAFETY LIMIT Spatial Peak Uncontrolled Exposure/General Population				**1.6 W/kg (mW/g) Averaged over 1g**				

12.5 Simultaneous Transmission SAR Analysis.

List of Mode for Simultaneous Multi-band Transmission:

	Position	Applicable Combination
Simultaneous Transmission Consideration	Head	WWAN (Voice) + WLAN 2.4 GHz
		WWAN (Voice) + WLAN 5.2GHz/5.3GHz/5.6GHz/5.8GHz + Bluetooth
	Body	WWAN (Data) + WLAN 2.4 GHz
		WWAN (Data) + WLAN 5.2GHz/5.3GHz/5.6GHz/5.8GHz + Bluetooth
	Hotspot	WWAN (Data) + WLAN 2.4 GHz
		WWAN (Data) + WLAN 5.2GHz/5.8GHz + Bluetooth

Note:

1. WLAN 2.4GHz Band, WLAN 5.2GHz Band, WLAN 5.3GHz Band, WLAN 5.6GHz Band, WLAN 5.8GHz Band and Bluetooth share the same antenna, and cannot transmit simultaneously.
2. GSM /LTE share the same antenna, and cannot transmit simultaneously.
3. The Report SAR summation is calculated based on the same configuration and test position.
4. Per KDB 447498 D01v06, simultaneous transmission SAR is compliant if,
   i. Scalar SAR summation < 1.6 W/kg.
   ii. SPLSR = $(SAR_1 + SAR_2)^{1.5}$ / (*min. separation distance, mm*), and the peak separation distance is determined from the square root of $[(x_1-x_2)^2 + (y_1-y_2)^2 + (z_1-z_2)^2]$, where (x_1, y_1, z_1) and (x_2, y_2, z_2) are the coordinates of the extrapolated peak SAR locations in the zoom scan If SPLSR ≤ 0.04, simultaneously transmission SAR measurement is not necessary

Simultaneously transmission SAR measurement, and the Reported multi-band SAR < 1.6 W/kg

For simultaneous transmission analysis, SAR is estimated per KDB 447498 D01 as below:

This device contains transmitters that may operate simultaneously. Therefore simultaneous transmission analysis is required. Per FCC KDB 447498 D01v06, simultaneous transmission SAR test exclusion may be applied when the sum of the 1-g SAR for all the simultaneous transmitting antennas in a specific a physical test configuration is ≤ 1.6 W/kg. When standalone SAR is not required to be measured, per FCC KDB 447498 D01v06 4.3.2), the following equation must be used to estimate the standalone 1g SAR for simultaneous transmission assessment involving that transmitter.

$$\text{Estimated SAR} = \frac{\sqrt{f(GHz)}}{7.5} \cdot \frac{\text{Max. power of channel, mW}}{\text{Min. Separation Distance, mm}}$$

Mode	Max. tune-up Power (dBm)	Exposure Position	Head	Body	Hotspot
		Test Distance (mm)	0	10	10
Bluetooth	6.0	Estimated SAR (W/kg)	0.066	0.033	0.033

Note:

1. When the minimum *test separation distance* is < 5 mm, a distance of 5 mm according is applied to determine estimated SAR.

12.6 Simultaneous Transmission SAR Value

Position		Standalone SAR(W/kg)				∑ SAR_{1g} (W/kg)	
		1	2	3	4	1+2	1+3+4
		WWAN	2.4G WLAN	5G WLAN	BT		
Head	Right Cheek	1.083	0.176	0.279	0.066	1.26	1.43
	Right Tilted	1.164	0.141	0.261	0.066	1.31	**1.49**
	Left Cheek	0.533	0.333	0.422	0.066	0.87	1.02
	Left Tilted	0.687	0.290	0.440	0.066	0.98	1.19
Body-worn	Front	0.320	0.073	0.061	0.033	0.39	0.41
	Back	0.428	0.112	0.557	0.033	0.54	1.02
Hotspot	Front	0.320	0.073	0.061	0.033	0.39	0.41
	Back	0.428	0.112	0.557	0.033	0.54	1.02
	Left	0.297	/	/	0.033	0.30	0.33
	Right	/	0.071	0.151	0.033	0.07	0.18
	Top	0.800	0.058	0.192	0.033	0.86	1.03

➢ **Simultaneous Transmission Conclusion**

The above numerical summed SAR results for all the case simultaneous transmission conditions were below the SAR limit. Therefore, the above analysis is sufficient to determine that simultaneous transmission cases will not exceed the SAR limit and therefore no measured volumetric simultaneous SAR summation is required per FCC KDB Publication 447498 D01v06.

12.7 MAXIMUM GRAPH RESULTS

The graph results see ANNEX C.

13. MEASUREMENT UNCERTAINTY

13.1 Uncertainty for SAR Test

Uncertainty Component	Tol. (%)	Prob Dist.	Div	ci (10g)	ci.ui(%) (10g)	vi
Probe Calibration	±6.7	N	1	1	±6.7	∞
Axial Isotropy	±0.5	R	$\sqrt{3}$	1	±0.3	∞
Hemispherical Isotropy	±2.6	R	$\sqrt{3}$	1	±1.5	∞
Linearity	±0.6	R	$\sqrt{3}$	1	±0.3	∞
Probe modulation response	±2.4	R	$\sqrt{3}$	1	±1.4	∞
Detection Limits	±1.0	R	$\sqrt{3}$	1	±0.6	∞
Boundary Effect	±2.0	R	$\sqrt{3}$	1	±1.2	∞
Readout Electronics	±0.3	N	1	1	±0.3	∞
Response Time	±0.8	R	$\sqrt{3}$	1	±0.5	∞
Integration Time	±2.6	R	$\sqrt{3}$	1	±1.5	∞
RF Ambient Conditions - Noise	±3.0	R	$\sqrt{3}$	1	±1.7	∞
RF Ambient Conditions - Reflections	±3.0	R	$\sqrt{3}$	1	±1.7	∞
Probe Positioner Mech. Restrictions	±0.8	R	$\sqrt{3}$	1	±0.5	∞
Probe Positioning with respect to Phantom Shell	±6.7	R	$\sqrt{3}$	1	±3.9	∞
Post-processing	±4.0	R	$\sqrt{3}$	1	±2.3	∞
Test Sample Related						
Device Holder Uncertainty	±3.6	N	1	1	±3.6	M-1
Test Sample Positioning	±2.9	N	1	1	±2.9	M-1
Power scaling	±0.0	R	$\sqrt{3}$	1	±0.0	∞
Drift of output power (measured SAR drift)	±5.0	R	$\sqrt{3}$	1	±2.9	∞
Phantom and Tissue Parameters						
Phantom Uncertainty (shape and thickness tolerances)	±7.6	R	$\sqrt{3}$	1	±4.4	∞
Algorithm for correcting SAR for deviations in permittivity and conductivity	±1.9	N	1	0.84	±1.3	∞
Liquid conductivity(meas.)	±2.5	N	1	0.71	±1.3	M-1
Liquid permittivity(meas.)	±2.5	N	1	0.26	±0.2	M
Liquid permittivity - temperature uncertainty	±3.4	R	$\sqrt{3}$	0.71	±1.0	∞
Liquid conductivity - temperature uncertainty	±0.4	R	$\sqrt{3}$	0.26	±0.0	∞
Combined Standard Uncertainty	±11.6					
Expanded STD Uncertainty	±23.2					

13.2 Uncertainty for System Validation

Uncertainty Component	Tol. (%)	Prob Dist.	Div	Ci (10g)	ci.ui(%) (10g)	vi
Probe Calibration	±6.7	N	1	1	±6.7	∞
Axial Isotropy	±0.5	R	$\sqrt{3}$	1	±0.3	∞
Hemispherical Isotropy	±2.6	R	$\sqrt{3}$	1	±1.5	∞
Linearity	±0.6	R	$\sqrt{3}$	1	±0.3	∞
Modulation response	±0.0	R	$\sqrt{3}$	1	±0.0	∞
Detection Limits	±1.0	R	$\sqrt{3}$	1	±0.6	∞
Boundary Effect	±1.0	R	$\sqrt{3}$	1	±0.6	∞
Readout Electronics	±0.3	N	1	1	±0.3	∞
Response Time	±0.0	R	$\sqrt{3}$	1	±0.0	∞
Integration Time	±0.0	R	$\sqrt{3}$	1	±0.0	∞
RF Ambient Conditions - Noise	±1.0	R	$\sqrt{3}$	1	±0.6	∞
RF Ambient Conditions - Reflections	±1.0	R	$\sqrt{3}$	1	±0.6	∞
Probe Positioner Mech. Restrictions	±0.8	R	$\sqrt{3}$	1	±0.5	∞
Probe Positioning with respect to Phantom Shell	±6.7	R	$\sqrt{3}$	1	±3.9	∞
Post-processing	±4.0	R	$\sqrt{3}$	1	±2.3	∞
Field source						
Deviation of the experimental source from numerical source	±5.5	N	1	1	±5.5	∞
Source to liquid distance	±2.0	R	$\sqrt{3}$	1	±1.2	∞
Drift of output power (measured SAR drift)	±3.4	R	$\sqrt{3}$	1	±2.0	∞
Phantom and Setup						
Phantom Uncertainty (shape and thickness tolerances)	±4.0	R	$\sqrt{3}$	1	±2.3	∞
Algorithm for correcting SAR for deviations in permittivity and conductivity	±1.9	N	1	0.84	±1.3	∞
Liquid conductivity(meas.)	±2.5	N	1	0.21	±0.1	M
Liquid permittivity(meas.)	±2.5	N	1	0.26	±0.2	M
Liquid permittivity - temperature uncertainty	±1.7	R	$\sqrt{3}$	0.71	±0.5	1
Liquid conductivity - temperature uncertainty	±0.3	R	$\sqrt{3}$	0.26	±0.0	∞
Combined Std. Uncertainty	±10.2					
Expanded STD Uncertainty	±20.4					

14. TEST EQUIPMENT LIST

Equipment No.	Equipment	Manufacturer	Model No.	Serial No.	Last Cal.	Cal. Interval
SZ060-01	SAR Test System	SPEAG	DASY52 SAR TX90XL	F14/5YJ0B1 /A/01	2025-04-21	1 year
SZ060-01-01	E-Field Probe	SPEAG	EX3DV4	7322	2025-04-21	1 year
SZ060-01-03	System Validation Dipole	SPEAG	D750V3	1141	2024-03-14	3 year
SZ060-01-04	System Validation Dipole	SPEAG	D835V2	4d196	2024-11-04	3 year
SZ060-01-06	System Validation Dipole	SPEAG	D1750V2	1138	2024-11-06	3 year
SZ060-01-07	System Validation Dipole	SPEAG	D1900V2	5d203	2024-11-04	3 year
SZ060-01-10	System Validation Dipole	SPEAG	D2450V2	966	2024-11-06	3 year
SZ060-01-11	System Validation Dipole	SPEAG	D2600V2	1108	2024-11-08	3 year
SZ060-01-12	System Validation Dipole	SPEAG	D5GHzV2	1218	2024-11-05	3 year
SZ060-01-13	Data Acquisition Unit	SPEAG	DAE4	1473	2025-04-21	1 year
SZ060-01-14	Dielectric Assessment Kit	SPEAG	DAKS 3.5	1056	2025-08-26	1 year
SZ060-01-15	Vector Reflectometer	Copper Mountain Technologies	Planar R140	0090614	2025-07-08	1 year
SZ060-01-16	Thermometer	LKM electronics GmbH	DTM3000	3477	2024-12-26	1 year
SZ060-01-17	Power Amplifier	Mini Circuits	ZHL-42W+	QA1449003	2025-11-01	1 year
SZ060-01-18	Power Amplifier	Mini Circuits	ZVE-8G+	111701437	2025-11-01	1 year
SZ060-01-19	SAM Twin Phantom	SPEAG	SAM Twin Phantom V5.0	1888	N/A	N/A
SZ060-01-20	SAM Twin Phantom	SPEAG	SAM Twin Phantom V5.0	1891	N/A	N/A
SZ060-01-21	ELI Phantom	SPEAG	ELI Phantom V6.0	2033	N/A	N/A
SZ180-13	MXG Vector Signal Generator	Keysight	N5182B	MY53051328	2025-09-15	1 year
SZ070-04	Directional Bridge	Agilent	86205A	MY31402141	2025-12-02	1 year
SZ182-02	RF Power Meter	Anritsu	ML2496A	1302005	2025-04-21	1 year
SZ182-02-01	Pulse Power Sensor	Anritsu	MA2411B	1207429	2025-04-21	1 year
SZ182-03	Average power sensor	R&S	NRP-Z22	101689	2025-04-21	1 year
SZ065-06	Wideband Radio Communication Tester	R&S	CMW500	154161	2025-12-01	1 year
N/A	Device Holder	SPEAG	N/A	N/A	N/A	N/A

ANNEX A: TEST LAYOUT AND SETUP

The Test Layout and Setup are saved with filename: SAR Test Setup.pdf.

ANNEX B: SYSTEM CHECK RESULTS

The graph results see ANNEX A of 251205047SZN-006-Appendix A.

ANNEX C: MAXIMUM GRAPH RESULTS

The graph results see ANNEX B of 251205047SZN-006-Appendix A.

ANNEX D: SYSTEM VALIDATION

The graph results see ANNEX C of 251205047SZN-006-Appendix A.

ANNEX E: EUT PHOTO

The EUT photos are saved with filename: external photos.pdf & internal photos.pdf.

ANNEX F: PROBE CALIBRATION CERTIFICATE

The graph results see 251205047SZN-006-Appendix B.

ANNEX G: DIPOLE CALIBRATION CERTIFICATE

The graph results see 251205047SZN-006-Appendix B.

ANNEX H: DAE CALIBRATION CERTIFICATE

The graph results see 251205047SZN-006-Appendix B.

**********End the Report**********