In Collaboration with
s p e a g
CALIBRATION LABORATORY

CAICT

Add: No.52 HuaYuanBei Road, Haidian District, Beijing, 100191, China
Tel: +86-10-62304633-2117
E-mail: emf@caict.ac.cn http://www.caict.ac.cn

Impedance Measurement Plot for Head TSL

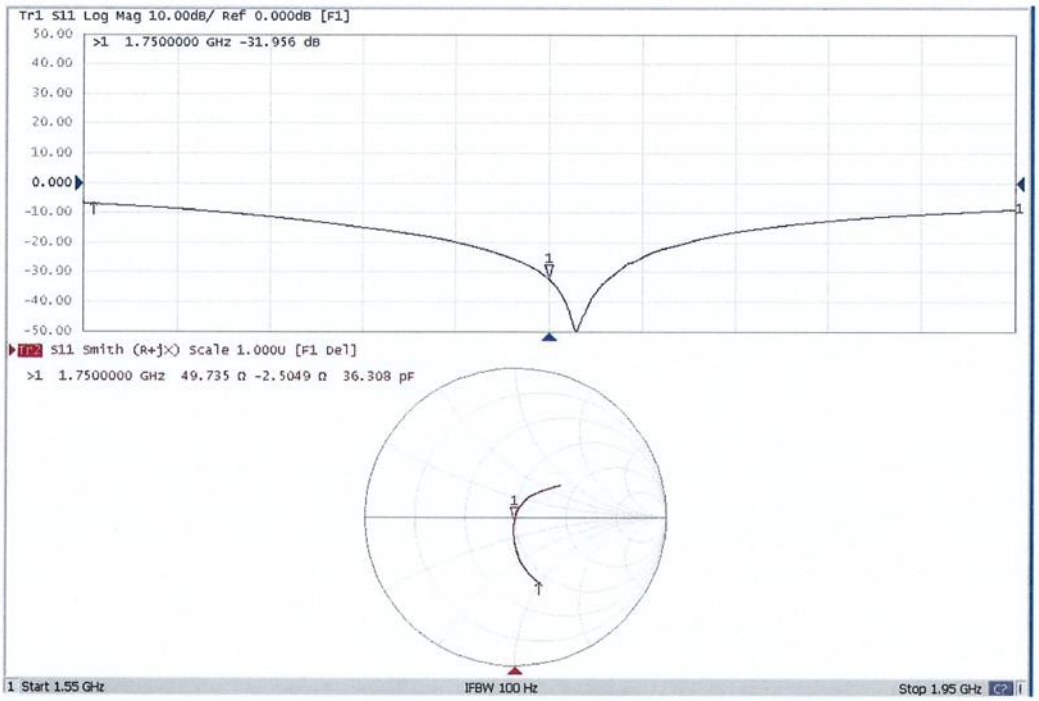

In Collaboration with
TTL speag CALIBRATION LABORATORY
Add: No.52 HuaYuanBei Road, Haidian District, Beijing, 100191
Tel: +86-10-62304633-2117
E-mail: cttl@chinattl.com http://www.caict.ac.cn

ilac-MRA CNAS 中国认可 国际互认 校准 CALIBRATION CNAS L0570 CAICT

Client: Intertek **Certificate No: 24J02Z000848**

CALIBRATION CERTIFICATE

Object	D1900V2 - SN: 5d203
Calibration Procedure(s)	FF-Z11-003-01 Calibration Procedures for dipole validation kits
Calibration date:	November 4, 2024

This calibration Certificate documents the traceability to national standards, which realize the physical units of measurements (SI). The measurements and the uncertainties with confidence probability are given on the following pages and are part of the certificate.

All calibrations have been conducted in the closed laboratory facility: environment temperature (22±3)°C and humidity<70%.

Calibration Equipment used (M&TE critical for calibration)

Primary Standards	ID #	Cal Date (Calibrated by, Certificate No.)	Scheduled Calibration
Power Meter NRP2	106276	17-May-24 (CTTL, No. J24X04107)	May-25
Power sensor NRP6A	101369	17-May-24 (CTTL, No. J24X04107)	May-25
Reference Probe EX3DV4	SN 7517	21-Feb-24(CTTL-SPEAG, No. 24J02Z80008)	Feb-25
DAE4	SN 1588	13-Sep-24(CTTL-SPEAG, No. 24J02Z000713)	Sep-25
Secondary Standards	**ID #**	**Cal Date (Calibrated by, Certificate No.)**	**Scheduled Calibration**
Signal Generator E4438C	MY49071430	25-Dec-23 (CTTL, No. J23X13426)	Dec-24
NetworkAnalyzer E5071C	MY46110673	25-Dec-23 (CTTL, No. J23X13425)	Dec-24
OCP DAK-3.5(weighted)	1040	22-Jan-24(SPEAG, No.OCP-DAK3.5-1040_Jan24)	Jan-25

	Name	Function	Signature
Calibrated by:	Zhao Jing	SAR Test Engineer	
Reviewed by:	Lin Jun	SAR Test Engineer	
Approved by:	Qi Dianyuan	SAR Project Leader	

Issued: November 15, 2024

This calibration certificate shall not be reproduced except in full without written approval of the laboratory.

In Collaboration with
speag
CALIBRATION LABORATORY

CAICT

Add: No.52 HuaYuanBei Road, Haidian District, Beijing, 100191, China
Tel: +86-10-62304633-2117
E-mail: cttl@chinattl.com http://www.caict.ac.cn

Glossary:

TSL	tissue simulating liquid
ConvF	sensitivity in TSL / NORMx,y,z
N/A	not applicable or not measured

Calibration is Performed According to the Following Standards:

a) IEC/IEEE 62209-1528, "Measurement Procedure for The Assessment of Specific Absorption Rate of Human Exposure to Radio Frequency Fields from Hand-held and Body-mounted Wireless Communication Devices- Part 1528: Human Models, Instrumentation and Procedures (Frequency range of 4 MHz to 10 GHz)", October 2020

b) KDB 865664, "SAR Measurement Requirements for 100 MHz to 6 GHz"

Additional Documentation:

c) DASY4/5 System Handbook

Methods Applied and Interpretation of Parameters:

- *Measurement Conditions:* Further details are available from the Validation Report at the end of the certificate. All figures stated in the certificate are valid at the frequency indicated.
- *Antenna Parameters with TSL:* The dipole is mounted with the spacer to position its feed point exactly below the center marking of the flat phantom section, with the arms oriented parallel to the body axis.
- *Feed Point Impedance and Return Loss:* These parameters are measured with the dipole positioned under the liquid filled phantom. The impedance stated is transformed from the measurement at the SMA connector to the feed point. The Return Loss ensures low reflected power. No uncertainty required.
- *Electrical Delay:* One-way delay between the SMA connector and the antenna feed point. No uncertainty required.
- *SAR measured:* SAR measured at the stated antenna input power.
- *SAR normalized:* SAR as measured, normalized to an input power of 1 W at the antenna connector.
- *SAR for nominal TSL parameters:* The measured TSL parameters are used to calculate the nominal SAR result.

The reported uncertainty of measurement is stated as the standard uncertainty of Measurement multiplied by the coverage factor k=2, which for a normal distribution Corresponds to a coverage probability of approximately 95%.

In Collaboration with
s p e a g
CALIBRATION LABORATORY

CAICT

Add: No.52 HuaYuanBei Road, Haidian District, Beijing, 100191, China
Tel: +86-10-62304633-2117
E-mail: cttl@chinattl.com http://www.caict.ac.cn

Measurement Conditions

DASY system configuration, as far as not given on page 1.

DASY Version	DASY52	52.10.4
Extrapolation	Advanced Extrapolation	
Phantom	Triple Flat Phantom 5.1C	
Distance Dipole Center - TSL	10 mm	with Spacer
Zoom Scan Resolution	dx, dy, dz = 5 mm	
Frequency	1900 MHz ± 1 MHz	

Head TSL parameters

The following parameters and calculations were applied.

	Temperature	**Permittivity**	**Conductivity**
Nominal Head TSL parameters	22.0 °C	40.0	1.40 mho/m
Measured Head TSL parameters	(22.0 ± 0.2) °C	41.0 ± 6 %	1.41 mho/m ± 6 %
Head TSL temperature change during test	<1.0 °C	----	----

SAR result with Head TSL

SAR averaged over 1 cm^3 (1 g) of Head TSL	Condition	
SAR measured	250 mW input power	9.87 W/kg
SAR for nominal Head TSL parameters	normalized to 1W	**39.5 W/kg ± 18.8 % (k=2)**
SAR averaged over 10 cm^3 (10 g) of Head TSL	Condition	
SAR measured	250 mW input power	5.11 W/kg
SAR for nominal Head TSL parameters	normalized to 1W	**20.5 W/kg ± 18.7 % (k=2)**

In Collaboration with
s p e a g
CALIBRATION LABORATORY

CAICT

Add: No.52 HuaYuanBei Road, Haidian District, Beijing, 100191, China
Tel: +86-10-62304633-2117
E-mail: cttl@chinattl.com http://www.caict.ac.cn

Appendix (Additional assessments outside the scope of CNAS L0570)

Antenna Parameters with Head TSL

Impedance, transformed to feed point	51.5Ω+ 6.36jΩ
Return Loss	- 23.8dB

General Antenna Parameters and Design

Electrical Delay (one direction)	1.106 ns

After long term use with 100W radiated power, only a slight warming of the dipole near the feed-point can be measured.

The dipole is made of standard semirigid coaxial cable. The center conductor of the feeding line is directly connected to the second arm of the dipole. The antenna is therefore short-circuited for DC-signals. On some of the dipoles, small end caps are added to the dipole arms in order to improve matching when loaded according to the position as explained in the "Measurement Conditions" paragraph. The SAR data are not affected by this change. The overall dipole length is still according to the Standard.
No excessive force must be applied to the dipole arms, because they might bend or the soldered connections near the feed-point may be damaged.

Additional EUT Data

Manufactured by	SPEAG

In Collaboration with
s p e a g
CALIBRATION LABORATORY

CAICT

Add: No.52 HuaYuanBei Road, Haidian District, Beijing, 100191, China
Tel: +86-10-62304633-2117
E-mail: cttl@chinattl.com http://www.caict.ac.cn

DASY5 Validation Report for Head TSL Date: 2024-11-04

Test Laboratory: CTTL, Beijing, China

DUT: Dipole 1900 MHz; Type: D1900V2; Serial: D1900V2 - SN: 5d203

Communication System: UID 0, CW; Frequency: 1900 MHz; Duty Cycle: 1:1

Medium parameters used: f = 1900 MHz; σ = 1.41 S/m; ε_r = 41.02; ρ = 1000 kg/m^3

Phantom section: Right Section

Measurement Standard: DASY5 (IEEE/IEC/ANSI C63.19-2007)

DASY5 Configuration:

- Probe: EX3DV4 - SN7517; ConvF(7.95, 7.95, 7.95) @ 1900 MHz; Calibrated: 2024-02-21
- Sensor-Surface: 1.4mm (Mechanical Surface Detection)
- Electronics: DAE4 Sn1588; Calibrated: 2024-09-13
- Phantom: MFP_V5.1C (20deg probe tilt); Type: QD 000 P51 Cx; Serial: 1062
- DASY52 52.10.4(1535); SEMCAD X 14.6.14(7501)

Dipole Calibration/Zoom Scan (7x7x7) (7x7x7)/Cube 0: Measurement grid: dx=5mm, dy=5mm, dz=5mm

Reference Value = 100.2 V/m; Power Drift = 0.00 dB

Peak SAR (extrapolated) = 18.6 W/kg

SAR(1 g) = 9.87 W/kg; SAR(10 g) = 5.11 W/kg

Smallest distance from peaks to all points 3 dB below = 9.2 mm

Ratio of SAR at M2 to SAR at M1 = 53.9%

Maximum value of SAR (measured) = 15.4 W/kg

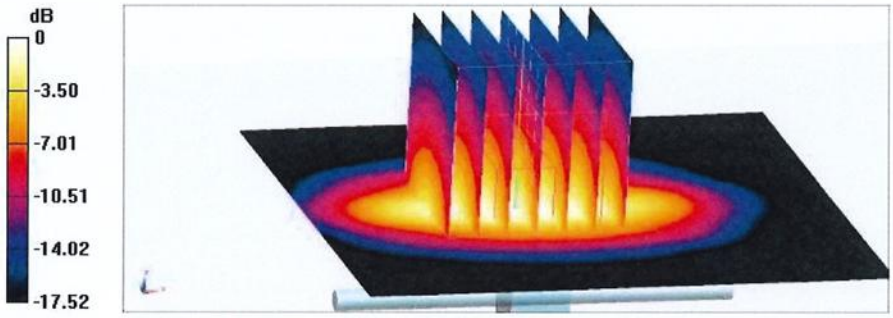

0 dB = 15.4 W/kg = 11.88 dBW/kg

In Collaboration with
speag
CALIBRATION LABORATORY

CAICT

Add: No.52 HuaYuanBei Road, Haidian District, Beijing, 100191, China
Tel: +86-10-62304633-2117
E-mail: cttl@chinattl.com http://www.caict.ac.cn

Impedance Measurement Plot for Head TSL

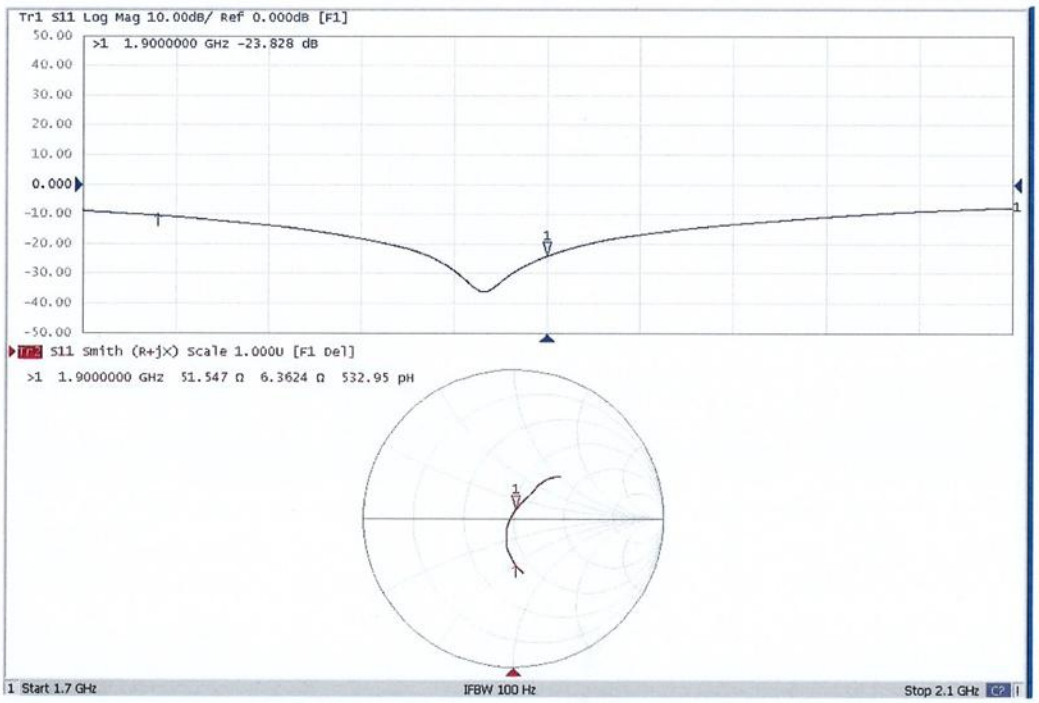

In Collaboration with
TTL s p e a g
CALIBRATION LABORATORY
Add: No.52 HuaYuanBei Road, Haidian District, Beijing, 100191
Tel: +86-10-62304633-2117
E-mail: cttl@chinattl.com http://www.caict.ac.cn

ilac-MRA CNAS 中国认可 国际互认 校准 CALIBRATION CNAS L0570 CAICT

Client **Intertek** **Certificate No: 24J02Z000850**

CALIBRATION CERTIFICATE

Object	D2450V2 - SN: 966
Calibration Procedure(s)	FF-Z11-003-01 Calibration Procedures for dipole validation kits
Calibration date:	November 6, 2024

This calibration Certificate documents the traceability to national standards, which realize the physical units of measurements (SI). The measurements and the uncertainties with confidence probability are given on the following pages and are part of the certificate.

All calibrations have been conducted in the closed laboratory facility: environment temperature (22±3)°C and humidity<70%.

Calibration Equipment used (M&TE critical for calibration)

Primary Standards	ID #	Cal Date (Calibrated by, Certificate No.)	Scheduled Calibration
Power Meter NRP2	106276	17-May-24 (CTTL, No. J24X04107)	May-25
Power sensor NRP6A	101369	17-May-24 (CTTL, No. J24X04107)	May-25
Reference Probe EX3DV4	SN 7517	21-Feb-24(CTTL-SPEAG, No. 24J02Z80008)	Feb-25
DAE4	SN 1588	13-Sep-24(CTTL-SPEAG, No. 24J02Z000713)	Sep-25
Secondary Standards	**ID #**	**Cal Date (Calibrated by, Certificate No.)**	**Scheduled Calibration**
Signal Generator E4438C	MY49071430	25-Dec-23 (CTTL, No. J23X13426)	Dec-24
NetworkAnalyzer E5071C	MY46110673	25-Dec-23 (CTTL, No. J23X13425)	Dec-24
OCP DAK-3.5(weighted)	1040	22-Jan-24(SPEAG, No.OCP-DAK3.5-1040_Jan24)	Jan-25

	Name	Function	Signature
Calibrated by:	Zhao Jing	SAR Test Engineer	
Reviewed by:	Lin Jun	SAR Test Engineer	
Approved by:	Qi Dianyuan	SAR Project Leader	

Issued: November 15, 2024

This calibration certificate shall not be reproduced except in full without written approval of the laboratory.

In Collaboration with
s p e a g
CALIBRATION LABORATORY

CAICT

Add: No.52 HuaYuanBei Road, Haidian District, Beijing, 100191, China
Tel: +86-10-62304633-2117
E-mail: cttl@chinattl.com http://www.caict.ac.cn

Glossary:

TSL	tissue simulating liquid
ConvF	sensitivity in TSL / NORMx,y,z
N/A	not applicable or not measured

Calibration is Performed According to the Following Standards:

a) IEC/IEEE 62209-1528, "Measurement Procedure for The Assessment of Specific Absorption Rate of Human Exposure to Radio Frequency Fields from Hand-held and Body-mounted Wireless Communication Devices- Part 1528: Human Models, Instrumentation and Procedures (Frequency range of 4 MHz to 10 GHz)", October 2020

b) KDB 865664, "SAR Measurement Requirements for 100 MHz to 6 GHz"

Additional Documentation:

c) DASY4/5 System Handbook

Methods Applied and Interpretation of Parameters:

- *Measurement Conditions:* Further details are available from the Validation Report at the end of the certificate. All figures stated in the certificate are valid at the frequency indicated.
- *Antenna Parameters with TSL:* The dipole is mounted with the spacer to position its feed point exactly below the center marking of the flat phantom section, with the arms oriented parallel to the body axis.
- *Feed Point Impedance and Return Loss:* These parameters are measured with the dipole positioned under the liquid filled phantom. The impedance stated is transformed from the measurement at the SMA connector to the feed point. The Return Loss ensures low reflected power. No uncertainty required.
- *Electrical Delay:* One-way delay between the SMA connector and the antenna feed point. No uncertainty required.
- *SAR measured:* SAR measured at the stated antenna input power.
- *SAR normalized:* SAR as measured, normalized to an input power of 1 W at the antenna connector.
- *SAR for nominal TSL parameters:* The measured TSL parameters are used to calculate the nominal SAR result.

The reported uncertainty of measurement is stated as the standard uncertainty of Measurement multiplied by the coverage factor k=2, which for a normal distribution Corresponds to a coverage probability of approximately 95%.

In Collaboration with
s p e a g
CALIBRATION LABORATORY

CAICT

Add: No.52 HuaYuanBei Road, Haidian District, Beijing, 100191, China
Tel: +86-10-62304633-2117
E-mail: cttl@chinattl.com http://www.caict.ac.cn

Measurement Conditions

DASY system configuration, as far as not given on page 1.

DASY Version	DASY52	52.10.4
Extrapolation	Advanced Extrapolation	
Phantom	Triple Flat Phantom 5.1C	
Distance Dipole Center - TSL	10 mm	with Spacer
Zoom Scan Resolution	dx, dy, dz = 5 mm	
Frequency	2450 MHz ± 1 MHz	

Head TSL parameters

The following parameters and calculations were applied.

	Temperature	**Permittivity**	**Conductivity**
Nominal Head TSL parameters	22.0 °C	39.2	1.80 mho/m
Measured Head TSL parameters	(22.0 ± 0.2) °C	40.1 ± 6 %	1.81 mho/m ± 6 %
Head TSL temperature change during test	<1.0 °C	----	----

SAR result with Head TSL

SAR averaged over 1 cm^3 (1 g) of Head TSL	Condition	
SAR measured	250 mW input power	13.1 W/kg
SAR for nominal Head TSL parameters	normalized to 1W	**52.5 W/kg ± 18.8 % (*k*=2)**
SAR averaged over 10 cm^3 (10 g) of Head TSL	Condition	
SAR measured	250 mW input power	6.07 W/kg
SAR for nominal Head TSL parameters	normalized to 1W	**24.3 W/kg ± 18.7 % (*k*=2)**

In Collaboration with
s p e a g
CALIBRATION LABORATORY

CAICT

Add: No.52 HuaYuanBei Road, Haidian District, Beijing, 100191, China
Tel: +86-10-62304633-2117
E-mail: cttl@chinattl.com http://www.caict.ac.cn

Appendix (Additional assessments outside the scope of CNAS L0570)

Antenna Parameters with Head TSL

Impedance, transformed to feed point	51.5Ω+ 4.27jΩ
Return Loss	- 27.0dB

General Antenna Parameters and Design

Electrical Delay (one direction)	1.062 ns

After long term use with 100W radiated power, only a slight warming of the dipole near the feed-point can be measured.

The dipole is made of standard semirigid coaxial cable. The center conductor of the feeding line is directly connected to the second arm of the dipole. The antenna is therefore short-circuited for DC-signals. On some of the dipoles, small end caps are added to the dipole arms in order to improve matching when loaded according to the position as explained in the "Measurement Conditions" paragraph. The SAR data are not affected by this change. The overall dipole length is still according to the Standard.
No excessive force must be applied to the dipole arms, because they might bend or the soldered connections near the feed-point may be damaged.

Additional EUT Data

Manufactured by	SPEAG

In Collaboration with
s p e a g
CALIBRATION LABORATORY

CAICT

Add: No.52 HuaYuanBei Road, Haidian District, Beijing, 100191, China
Tel: +86-10-62304633-2117
E-mail: cttl@chinattl.com http://www.caict.ac.cn

DASY5 Validation Report for Head TSL Date: 2024-11-06

Test Laboratory: CTTL, Beijing, China

DUT: Dipole 2450 MHz; Type: D2450V2; Serial: D2450V2 - SN: 966

Communication System: UID 0, CW; Frequency: 2450 MHz

Medium parameters used: f = 2450 MHz; σ = 1.809 S/m; ε_r = 40.08; ρ = 1000 kg/m^3

Phantom section: Right Section

Measurement Standard: DASY5 (IEEE/IEC/ANSI C63.19-2007)

DASY5 Configuration:

- Probe: EX3DV4 - SN7517; ConvF(7.37, 7.37, 7.37) @ 2450 MHz; Calibrated: 2024-02-21
- Sensor-Surface: 1.4mm (Mechanical Surface Detection)
- Electronics: DAE4 Sn1588; Calibrated: 2024-09-13
- Phantom: MFP_V5.1C (20deg probe tilt); Type: QD 000 P51 Cx; Serial: 1062
- DASY52 52.10.4(1535); SEMCAD X 14.6.14(7501)

Dipole Calibration/Zoom Scan (7x7x7) (7x7x7)/Cube 0: Measurement grid: dx=5mm, dy=5mm, dz=5mm

Reference Value = 105.0 V/m; Power Drift = 0.00 dB

Peak SAR (extrapolated) = 26.7 W/kg

SAR(1 g) = 13.1 W/kg; SAR(10 g) = 6.07 W/kg

Smallest distance from peaks to all points 3 dB below = 8.2 mm

Ratio of SAR at M2 to SAR at M1 = 49.5%

Maximum value of SAR (measured) = 21.8 W/kg

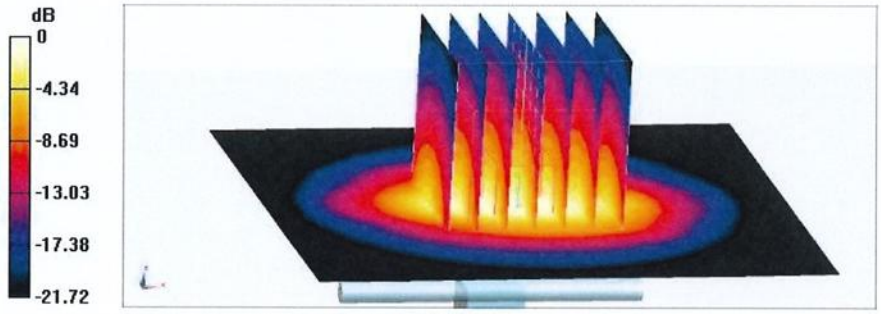

0 dB = 21.8 W/kg = 13.38 dBW/kg

In Collaboration with
s p e a g
CALIBRATION LABORATORY

CAICT

Add: No.52 HuaYuanBei Road, Haidian District, Beijing, 100191, China
Tel: +86-10-62304633-2117
E-mail: cttl@chinattl.com http://www.caict.ac.cn

Impedance Measurement Plot for Head TSL

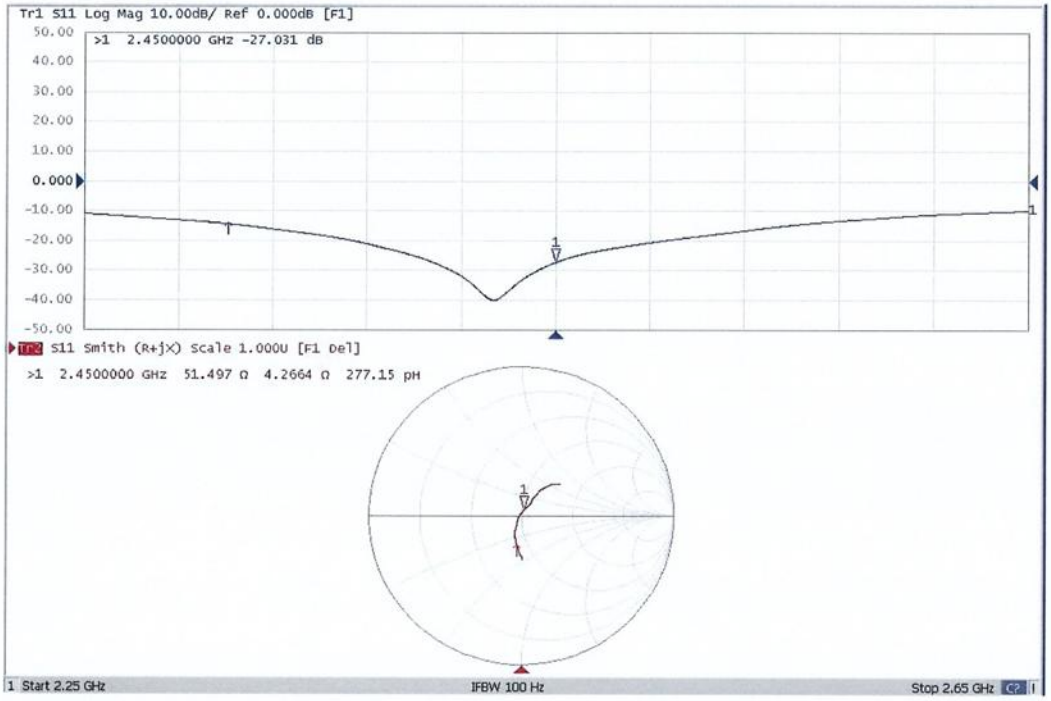

In Collaboration with
CTTL speag
CALIBRATION LABORATORY
Add: No.52 HuaYuanBei Road, Haidian District, Beijing, 100191
Tel: +86-10-62304633-2117
E-mail: emf@caict.ac.cn http://www.caict.ac.cn

ilac-MRA CNAS 中国认可 国际互认 校准 CALIBRATION CNAS L0570 CAICT

Client: Intertek **Certificate No: 24J02Z000851**

CALIBRATION CERTIFICATE

Object	D2600V2 - SN: 1108
Calibration Procedure(s)	FF-Z11-003-01 Calibration Procedures for dipole validation kits
Calibration date:	November 8, 2024

This calibration Certificate documents the traceability to national standards, which realize the physical units of measurements (SI). The measurements and the uncertainties with confidence probability are given on the following pages and are part of the certificate.

All calibrations have been conducted in the closed laboratory facility: environment temperature (22±3)°C and humidity<70%.

Calibration Equipment used (M&TE critical for calibration)

Primary Standards	ID #	Cal Date (Calibrated by, Certificate No.)	Scheduled Calibration
Power Meter NRP2	106276	17-May-24 (CTTL, No. J24X04107)	May-25
Power sensor NRP6A	101369	17-May-24 (CTTL, No. J24X04107)	May-25
Reference Probe EX3DV4	SN 7517	21-Feb-24(CTTL-SPEAG, No. 24J02Z80008)	Feb-25
DAE4	SN 1588	13-Sep-24(CTTL-SPEAG, No. 24J02Z000713)	Sep-25
Secondary Standards	**ID #**	**Cal Date (Calibrated by, Certificate No.)**	**Scheduled Calibration**
Signal Generator E4438C	MY49071430	25-Dec-23 (CTTL, No. J23X13426)	Dec-24
NetworkAnalyzer E5071C	MY46110673	25-Dec-23 (CTTL, No. J23X13425)	Dec-24
OCP DAK-3.5(weighted)	1040	22-Jan-24(SPEAG, No.OCP-DAK3.5-1040_Jan24)	Jan-25

	Name	Function	Signature
Calibrated by:	Zhao Jing	SAR Test Engineer	
Reviewed by:	Lin Jun	SAR Test Engineer	
Approved by:	Qi Dianyuan	SAR Project Leader	

Issued: November 15, 2024

This calibration certificate shall not be reproduced except in full without written approval of the laboratory.

In Collaboration with
s p e a g
CALIBRATION LABORATORY

CAICT

Add: No.52 HuaYuanBei Road, Haidian District, Beijing, 100191, China
Tel: +86-10-62304633-2117
E-mail: emf@caict.ac.cn http://www.caict.ac.cn

Glossary:

TSL	tissue simulating liquid
ConvF	sensitivity in TSL / NORMx,y,z
N/A	not applicable or not measured

Calibration is Performed According to the Following Standards:

a) IEC/IEEE 62209-1528, "Measurement Procedure for The Assessment of Specific Absorption Rate of Human Exposure to Radio Frequency Fields from Hand-held and Body-mounted Wireless Communication Devices- Part 1528: Human Models, Instrumentation and Procedures (Frequency range of 4 MHz to 10 GHz)", October 2020

b) KDB 865664, "SAR Measurement Requirements for 100 MHz to 6 GHz"

Additional Documentation:

c) DASY4/5 System Handbook

Methods Applied and Interpretation of Parameters:

- *Measurement Conditions:* Further details are available from the Validation Report at the end of the certificate. All figures stated in the certificate are valid at the frequency indicated.
- *Antenna Parameters with TSL:* The dipole is mounted with the spacer to position its feed point exactly below the center marking of the flat phantom section, with the arms oriented parallel to the body axis.
- *Feed Point Impedance and Return Loss:* These parameters are measured with the dipole positioned under the liquid filled phantom. The impedance stated is transformed from the measurement at the SMA connector to the feed point. The Return Loss ensures low reflected power. No uncertainty required.
- *Electrical Delay:* One-way delay between the SMA connector and the antenna feed point. No uncertainty required.
- *SAR measured:* SAR measured at the stated antenna input power.
- *SAR normalized:* SAR as measured, normalized to an input power of 1 W at the antenna connector.
- *SAR for nominal TSL parameters:* The measured TSL parameters are used to calculate the nominal SAR result.

The reported uncertainty of measurement is stated as the standard uncertainty of Measurement multiplied by the coverage factor k=2, which for a normal distribution Corresponds to a coverage probability of approximately 95%.

In Collaboration with
s p e a g
CALIBRATION LABORATORY

CAICT

Add: No.52 HuaYuanBei Road, Haidian District, Beijing, 100191, China
Tel: +86-10-62304633-2117
E-mail: emf@caict.ac.cn http://www.caict.ac.cn

Measurement Conditions

DASY system configuration, as far as not given on page 1.

DASY Version	DASY52	52.10.4
Extrapolation	Advanced Extrapolation	
Phantom	Triple Flat Phantom 5.1C	
Distance Dipole Center - TSL	10 mm	with Spacer
Zoom Scan Resolution	dx, dy, dz = 5 mm	
Frequency	2600 MHz ± 1 MHz	

Head TSL parameters

The following parameters and calculations were applied.

	Temperature	**Permittivity**	**Conductivity**
Nominal Head TSL parameters	22.0 °C	39.0	1.96 mho/m
Measured Head TSL parameters	(22.0 ± 0.2) °C	38.8 ± 6 %	1.97 mho/m ± 6 %
Head TSL temperature change during test	<1.0 °C	----	----

SAR result with Head TSL

SAR averaged over 1 cm^3 (1 g) of Head TSL	Condition	
SAR measured	250 mW input power	13.9 W/kg
SAR for nominal Head TSL parameters	normalized to 1W	**55.3 W/kg ± 18.8 % (*k*=2)**
SAR averaged over 10 cm^3 (10 g) of Head TSL	Condition	
SAR measured	250 mW input power	6.20 W/kg
SAR for nominal Head TSL parameters	normalized to 1W	**24.7 W/kg ± 18.7 % (*k*=2)**

In Collaboration with
s p e a g
CALIBRATION LABORATORY

CAICT

Add: No.52 HuaYuanBei Road, Haidian District, Beijing, 100191, China
Tel: +86-10-62304633-2117
E-mail: emf@caict.ac.cn http://www.caict.ac.cn

Appendix (Additional assessments outside the scope of CNAS L0570)

Antenna Parameters with Head TSL

Impedance, transformed to feed point	47.1Ω- 5.37jΩ
Return Loss	- 24.0dB

General Antenna Parameters and Design

Electrical Delay (one direction)	1.062 ns

After long term use with 100W radiated power, only a slight warming of the dipole near the feed-point can be measured.

The dipole is made of standard semirigid coaxial cable. The center conductor of the feeding line is directly connected to the second arm of the dipole. The antenna is therefore short-circuited for DC-signals. On some of the dipoles, small end caps are added to the dipole arms in order to improve matching when loaded according to the position as explained in the "Measurement Conditions" paragraph. The SAR data are not affected by this change. The overall dipole length is still according to the Standard.
No excessive force must be applied to the dipole arms, because they might bend or the soldered connections near the feed-point may be damaged.

Additional EUT Data

Manufactured by	SPEAG

In Collaboration with
s p e a g
CALIBRATION LABORATORY

CAICT

Add: No.52 HuaYuanBei Road, Haidian District, Beijing, 100191, China
Tel: +86-10-62304633-2117
E-mail: emf@caict.ac.cn http://www.caict.ac.cn

DASY5 Validation Report for Head TSL Date: 2024-11-08

Test Laboratory: CTTL, Beijing, China

DUT: Dipole 2600 MHz; Type: D2600V2; Serial: D2600V2 - SN: 1108

Communication System: UID 0, CW; Frequency: 2600 MHz

Medium parameters used: f = 2600 MHz; σ = 1.974 S/m; ε_r = 38.76; ρ = 1000 kg/m^3

Phantom section: Right Section

Measurement Standard: DASY5 (IEEE/IEC/ANSI C63.19-2007)

DASY5 Configuration:

- Probe: EX3DV4 - SN7517; ConvF(7.23, 7.23, 7.23) @ 2600 MHz; Calibrated: 2024-02-21
- Sensor-Surface: 1.4mm (Mechanical Surface Detection)
- Electronics: DAE4 Sn1588; Calibrated: 2024-09-13
- Phantom: MFP_V5.1C (20deg probe tilt); Type: QD 000 P51 Cx; Serial: 1062
- DASY52 52.10.4(1535); SEMCAD X 14.6.14(7501)

Dipole Calibration/Zoom Scan (7x7x7) (7x7x7)/Cube 0: Measurement grid: dx=5mm, dy=5mm, dz=5mm

Reference Value = 105.9 V/m; Power Drift = -0.05 dB

Peak SAR (extrapolated) = 29.4 W/kg

SAR(1 g) = 13.9 W/kg; SAR(10 g) = 6.2 W/kg

Smallest distance from peaks to all points 3 dB below = 8.9 mm

Ratio of SAR at M2 to SAR at M1 = 48.2%

Maximum value of SAR (measured) = 23.8 W/kg

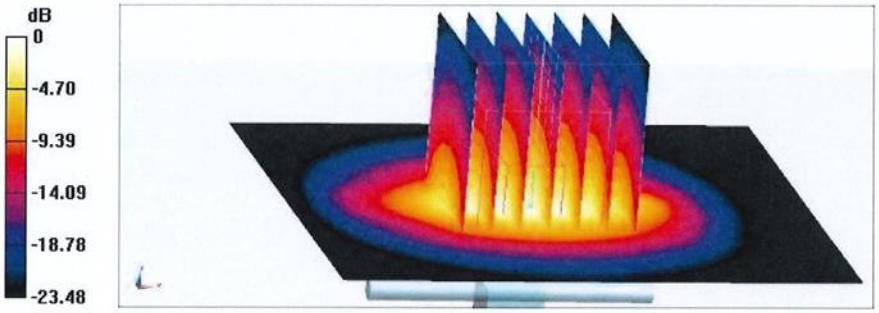

0 dB = 23.8 W/kg = 13.77 dBW/kg

In Collaboration with
speag
CALIBRATION LABORATORY

CAICT

Add: No.52 HuaYuanBei Road, Haidian District, Beijing, 100191, China
Tel: +86-10-62304633-2117
E-mail: emf@caict.ac.cn http://www.caict.ac.cn

Impedance Measurement Plot for Head TSL

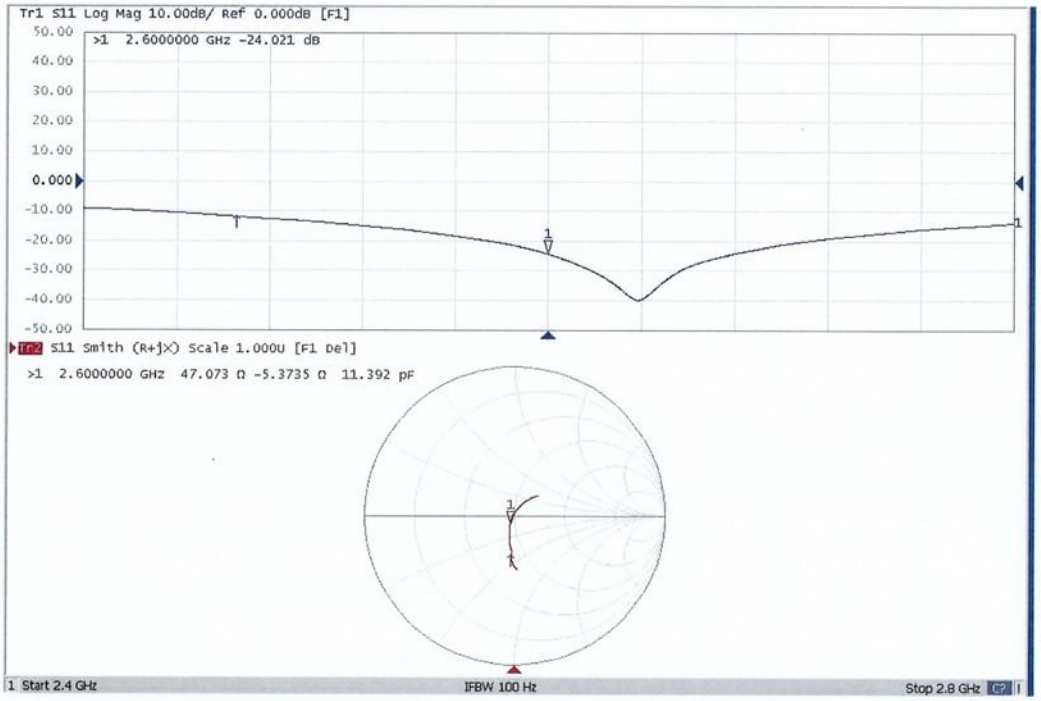

In Collaboration with
CTTL speag
CALIBRATION LABORATORY
Add: No.52 HuaYuanBei Road, Haidian District, Beijing, 100191
Tel: +86-10-62302117
E-mail: emf@caict.ac.cn http://www.caict.ac.cn

ilac-MRA CNAS 中国认可 国际互认 校准 CALIBRATION CNAS L0570 CAICT

Client Intertek Certificate No: 24J02Z000852

CALIBRATION CERTIFICATE

Object	D5GHzV2 - SN: 1218
Calibration Procedure(s)	FF-Z11-003-01 Calibration Procedures for dipole validation kits
Calibration date:	November 5, 2024

This calibration Certificate documents the traceability to national standards, which realize the physical units of measurements (SI). The measurements and the uncertainties with confidence probability are given on the following pages and are part of the certificate.

All calibrations have been conducted in the closed laboratory facility: environment temperature (22±3)°C and humidity<70%.

Calibration Equipment used (M&TE critical for calibration)

Primary Standards	ID #	Cal Date (Calibrated by, Certificate No.)	Scheduled Calibration
Power Meter NRP2	106276	17-May-24 (CTTL, No. J24X04107)	May-25
Power sensor NRP6A	101369	17-May-24 (CTTL, No. J24X04107)	May-25
Reference Probe EX3DV4	SN 7517	21-Feb-24(CTTL-SPEAG, No. 24J02Z80008)	Feb-25
DAE4	SN 1588	13-Sep-24(CTTL-SPEAG, No. 24J02Z000713)	Sep-25
Secondary Standards	**ID #**	**Cal Date (Calibrated by, Certificate No.)**	**Scheduled Calibration**
Signal Generator E4438C	MY49071430	25-Dec-23 (CTTL, No. J23X13426)	Dec-24
NetworkAnalyzer E5071C	MY46110673	25-Dec-23 (CTTL, No. J23X13425)	Dec-24
OCP DAK-3.5(weighted)	1040	22-Jan-24(SPEAG, No.OCP-DAK3.5-1040_Jan24)	Jan-25

	Name	Function	Signature
Calibrated by:	Zhao Jing	SAR Test Engineer	
Reviewed by:	Lin Jun	SAR Test Engineer	
Approved by:	Qi Dianyuan	SAR Project Leader	

Issued: November 15, 2024

This calibration certificate shall not be reproduced except in full without written approval of the laboratory.

In Collaboration with
speag
CALIBRATION LABORATORY

CAICT

Add: No.52 HuaYuanBei Road, Haidian District, Beijing, 100191, China
Tel: +86-10-62302117
E-mail: emf@caict.ac.cn http://www.caict.ac.cn

Glossary:

TSL	tissue simulating liquid
ConvF	sensitivity in TSL / NORMx,y,z
N/A	not applicable or not measured

Calibration is Performed According to the Following Standards:

a) IEC/IEEE 62209-1528, "Measurement Procedure for The Assessment of Specific Absorption Rate of Human Exposure to Radio Frequency Fields from Hand-held and Body-mounted Wireless Communication Devices- Part 1528: Human Models, Instrumentation and Procedures (Frequency range of 4 MHz to 10 GHz)", October 2020

b) KDB 865664, "SAR Measurement Requirements for 100 MHz to 6 GHz"

Additional Documentation:

c) DASY4/5 System Handbook

Methods Applied and Interpretation of Parameters:

- *Measurement Conditions:* Further details are available from the Validation Report at the end of the certificate. All figures stated in the certificate are valid at the frequency indicated.
- *Antenna Parameters with TSL:* The dipole is mounted with the spacer to position its feed point exactly below the center marking of the flat phantom section, with the arms oriented parallel to the body axis.
- *Feed Point Impedance and Return Loss:* These parameters are measured with the dipole positioned under the liquid filled phantom. The impedance stated is transformed from the measurement at the SMA connector to the feed point. The Return Loss ensures low reflected power. No uncertainty required.
- *Electrical Delay:* One-way delay between the SMA connector and the antenna feed point. No uncertainty required.
- *SAR measured:* SAR measured at the stated antenna input power.
- *SAR normalized:* SAR as measured, normalized to an input power of 1 W at the antenna connector.
- *SAR for nominal TSL parameters:* The measured TSL parameters are used to calculate the nominal SAR result.

The reported uncertainty of measurement is stated as the standard uncertainty of Measurement multiplied by the coverage factor k=2, which for a normal distribution Corresponds to a coverage probability of approximately 95%.

In Collaboration with
s p e a g
CALIBRATION LABORATORY

CAICT

Add: No.52 HuaYuanBei Road, Haidian District, Beijing, 100191, China
Tel: +86-10-62302117
E-mail: emf@caict.ac.cn http://www.caict.ac.cn

Measurement Conditions

DASY system configuration, as far as not given on page 1.

DASY Version	DASY52	52.10.4
Extrapolation	Advanced Extrapolation	
Phantom	Triple Flat Phantom 5.1C	
Distance Dipole Center - TSL	10 mm	with Spacer
Zoom Scan Resolution	dx, dy = 4 mm, dz = 1.4 mm	Graded Ratio = 1.4 (Z direction)
Frequency	5200 MHz ± 1 MHz 5300 MHz ± 1 MHz 5600 MHz ± 1 MHz 5800 MHz ± 1 MHz	

Head TSL parameters at 5200MHz

The following parameters and calculations were applied.

	Temperature	**Permittivity**	**Conductivity**
Nominal Head TSL parameters	22.0 °C	36.0	4.66 mho/m
Measured Head TSL parameters	(22.0 ± 0.2) °C	36.0 ± 6 %	4.64 mho/m ± 6 %
Head TSL temperature change during test	<1.0 °C	----	----

SAR result with Head TSL at 5200MHz

SAR averaged over 1 cm^3 (1 g) of Head TSL	Condition	
SAR measured	100 mW input power	7.76 W/kg
SAR for nominal Head TSL parameters	normalized to 1W	**77.6 W/kg ± 24.4 % (*k*=2)**
SAR averaged over 10 cm^3 (10 g) of Head TSL	Condition	
SAR measured	100 mW input power	2.15 W/kg
SAR for nominal Head TSL parameters	normalized to 1W	**21.5 W/kg ± 24.2 % (*k*=2)**

In Collaboration with
speag
CALIBRATION LABORATORY

CAICT

Add: No.52 HuaYuanBei Road, Haidian District, Beijing, 100191, China
Tel: +86-10-62302117
E-mail: emf@caict.ac.cn http://www.caict.ac.cn

Head TSL parameters at 5300MHz

The following parameters and calculations were applied.

	Temperature	Permittivity	Conductivity
Nominal Head TSL parameters	22.0 °C	35.9	4.76 mho/m
Measured Head TSL parameters	(22.0 ± 0.2) °C	35.8 ± 6 %	4.76 mho/m ± 6 %
Head TSL temperature change during test	<1.0 °C	----	----

SAR result with Head TSL at 5300MHz

SAR averaged over 1 cm^3 (1 g) of Head TSL	Condition	
SAR measured	100 mW input power	7.81 W/kg
SAR for nominal Head TSL parameters	normalized to 1W	**78.0 W/kg ± 24.4 % (*k*=2)**
SAR averaged over 10 cm^3 (10 g) of Head TSL	Condition	
SAR measured	100 mW input power	2.18 W/kg
SAR for nominal Head TSL parameters	normalized to 1W	**21.8 W/kg ± 24.2 % (*k*=2)**

Head TSL parameters at 5600MHz

The following parameters and calculations were applied.

	Temperature	Permittivity	Conductivity
Nominal Head TSL parameters	22.0 °C	35.5	5.07 mho/m
Measured Head TSL parameters	(22.0 ± 0.2) °C	35.2 ± 6 %	5.08 mho/m ± 6 %
Head TSL temperature change during test	<1.0 °C	----	----

SAR result with Head TSL at 5600MHz

SAR averaged over 1 cm^3 (1 g) of Head TSL	Condition	
SAR measured	100 mW input power	8.13 W/kg
SAR for nominal Head TSL parameters	normalized to 1W	**81.2 W/kg ± 24.4 % (*k*=2)**
SAR averaged over 10 cm^3 (10 g) of Head TSL	Condition	
SAR measured	100 mW input power	2.26 W/kg
SAR for nominal Head TSL parameters	normalized to 1W	**22.6 W/kg ± 24.2 % (*k*=2)**

In Collaboration with
speag
CALIBRATION LABORATORY

CAICT

Add: No.52 HuaYuanBei Road, Haidian District, Beijing, 100191, China
Tel: +86-10-62302117
E-mail: emf@caict.ac.cn http://www.caict.ac.cn

Head TSL parameters at 5800MHz

The following parameters and calculations were applied.

	Temperature	Permittivity	Conductivity
Nominal Head TSL parameters	22.0 °C	35.3	5.27 mho/m
Measured Head TSL parameters	(22.0 ± 0.2) °C	35.0 ± 6 %	5.27 mho/m ± 6 %
Head TSL temperature change during test	<1.0 °C	----	----

SAR result with Head TSL at 5800MHz

SAR averaged over 1 cm^3 (1 g) of Head TSL	Condition	
SAR measured	100 mW input power	7.88 W/kg
SAR for nominal Head TSL parameters	normalized to 1W	**78.7 W/kg ± 24.4 % (*k*=2)**
SAR averaged over 10 cm^3 (10 g) of Head TSL	Condition	
SAR measured	100 mW input power	2.17 W/kg
SAR for nominal Head TSL parameters	normalized to 1W	**21.6 W/kg ± 24.2 % (*k*=2)**

In Collaboration with
s p e a g
CALIBRATION LABORATORY
CAICT
Add: No.52 HuaYuanBei Road, Haidian District, Beijing, 100191, China
Tel: +86-10-62302117
E-mail: emf@caict.ac.cn http://www.caict.ac.cn

Appendix (Additional assessments outside the scope of CNAS L0570)

Antenna Parameters with Head TSL at 5200MHz

Impedance, transformed to feed point	50.9Ω- 3.22jΩ
Return Loss	- 29.6dB

Antenna Parameters with Head TSL at 5300MHz

Impedance, transformed to feed point	47.8Ω+ 1.35jΩ
Return Loss	- 31.5dB

Antenna Parameters with Head TSL at 5600MHz

Impedance, transformed to feed point	52.4Ω- 0.48jΩ
Return Loss	- 32.4dB

Antenna Parameters with Head TSL at 5800MHz

Impedance, transformed to feed point	54.0Ω+ 7.90jΩ
Return Loss	- 21.4dB

In Collaboration with
s p e a g
CALIBRATION LABORATORY

CAICT

Add: No.52 HuaYuanBei Road, Haidian District, Beijing, 100191, China
Tel: +86-10-62302117
E-mail: emf@caict.ac.cn http://www.caict.ac.cn

General Antenna Parameters and Design

Electrical Delay (one direction)	1.096 ns

After long term use with 100W radiated power, only a slight warming of the dipole near the feed-point can be measured.

The dipole is made of standard semirigid coaxial cable. The center conductor of the feeding line is directly connected to the second arm of the dipole. The antenna is therefore short-circuited for DC-signals. On some of the dipoles, small end caps are added to the dipole arms in order to improve matching when loaded according to the position as explained in the "Measurement Conditions" paragraph. The SAR data are not affected by this change. The overall dipole length is still according to the Standard.
No excessive force must be applied to the dipole arms, because they might bend or the soldered connections near the feed-point may be damaged.

Additional EUT Data

Manufactured by	SPEAG

In Collaboration with
s p e a g
CALIBRATION LABORATORY

CAICT

Add: No.52 HuaYuanBei Road, Haidian District, Beijing, 100191, China
Tel: +86-10-62302117
E-mail: emf@caict.ac.cn http://www.caict.ac.cn

DASY5 Validation Report for Head TSL Date: 2024-11-05

Test Laboratory: CTTL, Beijing, China

DUT: Dipole 5GHz; Type: D5GHzV2; Serial: D5GHzV2 - SN: 1218

Communication System: CW; Frequency: 5200 MHz, Frequency: 5300 MHz, Frequency: 5600 MHz, Frequency: 5800 MHz

Medium parameters used: f = 5200 MHz; σ = 4.642 S/m; ε_r = 35.95; ρ = 1000 kg/m^3

Medium parameters used: f = 5300 MHz; σ = 4.755 S/m; ε_r = 35.75; ρ = 1000 kg/m^3

Medium parameters used: f = 5600 MHz; σ = 5.077 S/m; ε_r = 35.24; ρ = 1000 kg/m^3

Medium parameters used: f = 5800 MHz; σ = 5.274 S/m; ε_r = 34.97; ρ = 1000 kg/m^3

Phantom section: Right Section

Measurement Standard: DASY5 (IEEE/IEC/ANSI C63.19-2007)

DASY5 Configuration:

- Probe: EX3DV4 - SN7517; ConvF(5.43, 5.43, 5.43) @ 5200 MHz; ConvF(5.43, 5.43, 5.43) @ 5300 MHz; ConvF(4.83, 4.83, 4.83) @ 5600 MHz; ConvF(4.95, 4.95, 4.95) @ 5800 MHz; Calibrated: 2024-02-21
- Sensor-Surface: 1.4mm (Mechanical Surface Detection)
- Electronics: DAE4 Sn1588; Calibrated: 2024-09-13
- Phantom: MFP_V5.1C (20deg probe tilt); Type: QD 000 P51 Cx; Serial: 1062
- DASY52 52.10.4(1535); SEMCAD X 14.6.14(7501)

Dipole Calibration /Pin=100mW, d=10mm, f=5200 MHz/Zoom Scan, dist=1.4mm (8x8x7)/Cube 0: Measurement grid: dx=4mm, dy=4mm, dz=1.4mm
Reference Value = 71.11 V/m; Power Drift = -0.07 dB
Peak SAR (extrapolated) = 31.9 W/kg
SAR(1 g) = 7.76 W/kg; SAR(10 g) = 2.15 W/kg
Smallest distance from peaks to all points 3 dB below = 7.2 mm
Ratio of SAR at M2 to SAR at M1 = 64.8%
Maximum value of SAR (measured) = 18.2 W/kg

Dipole Calibration /Pin=100mW, d=10mm, f=5300 MHz/Zoom Scan, dist=1.4mm (8x8x7)/Cube 0: Measurement grid: dx=4mm, dy=4mm, dz=1.4mm
Reference Value = 71.09 V/m; Power Drift = -0.07 dB
Peak SAR (extrapolated) = 32.8 W/kg
SAR(1 g) = 7.81 W/kg; SAR(10 g) = 2.18 W/kg
Smallest distance from peaks to all points 3 dB below = 7.2 mm
Ratio of SAR at M2 to SAR at M1 = 63.9%
Maximum value of SAR (measured) = 18.5 W/kg

In Collaboration with
s p e a g
CALIBRATION LABORATORY

CAICT

Add: No.52 HuaYuanBei Road, Haidian District, Beijing, 100191, China
Tel: +86-10-62302117
E-mail: emf@caict.ac.cn http://www.caict.ac.cn

Dipole Calibration /Pin=100mW, d=10mm, f=5600 MHz/Zoom Scan, dist=1.4mm (8x8x7)/Cube 0: Measurement grid: dx=4mm, dy=4mm, dz=1.4mm
Reference Value = 70.97 V/m; Power Drift = -0.08 dB
Peak SAR (extrapolated) = 37.5 W/kg
SAR(1 g) = 8.13 W/kg; SAR(10 g) = 2.26 W/kg
Smallest distance from peaks to all points 3 dB below = 7.4 mm
Ratio of SAR at M2 to SAR at M1 = 60.9%
Maximum value of SAR (measured) = 19.8 W/kg

Dipole Calibration /Pin=100mW, d=10mm, f=5800 MHz/Zoom Scan, dist=1.4mm (8x8x7)/Cube 0: Measurement grid: dx=4mm, dy=4mm, dz=1.4mm
Reference Value = 69.18 V/m; Power Drift = -0.08 dB
Peak SAR (extrapolated) = 38.3 W/kg
SAR(1 g) = 7.88 W/kg; SAR(10 g) = 2.17 W/kg
Smallest distance from peaks to all points 3 dB below = 7.4 mm
Ratio of SAR at M2 to SAR at M1 = 59.1%
Maximum value of SAR (measured) = 19.7 W/kg

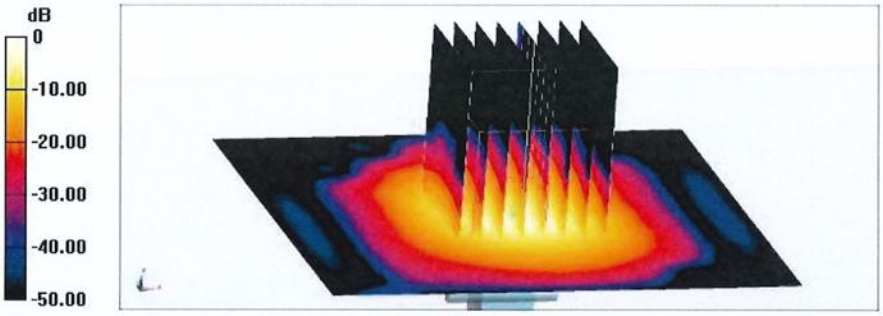

0 dB = 19.7 W/kg = 12.94 dBW/kg

In Collaboration with
speag
CALIBRATION LABORATORY

CAICT

Add: No.52 HuaYuanBei Road, Haidian District, Beijing, 100191, China
Tel: +86-10-62302117
E-mail: emf@caict.ac.cn http://www.caict.ac.cn
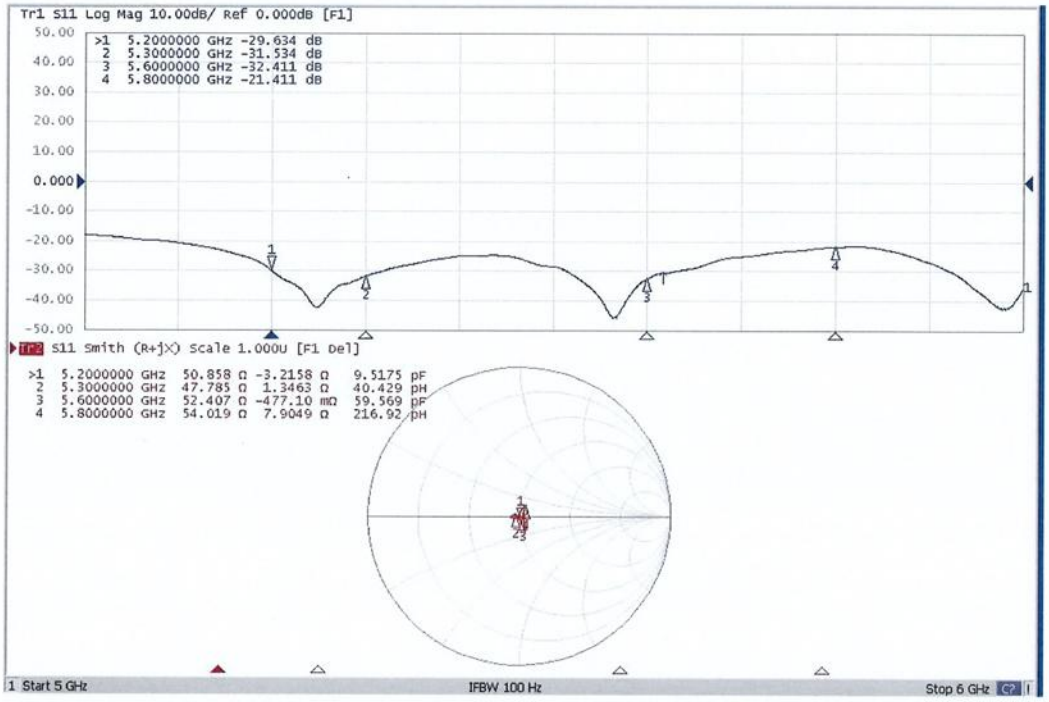
Impedance Measurement Plot for Head TSL