SAR TEST REPORT

Report Reference No.....:	**LCS170906103AE1**
FCC ID.....:	**2AJMSP2000L**
Testing Laboratory Name .....:	**Shenzhen LCS Compliance Testing Laboratory Ltd.**
Address .....:	1/F., Xingyuan Industrial Park, Tongda Road, Bao'an Avenue, Bao'an District, Shenzhen, Guangdong, China
Applicant's name.....:	**Shanghai SmartPeak Technology Co.,Ltd.**
Address .....:	Room 1, No.3 Builiding, NO.295, Qianqiao Road, Fengxian District, Shanghai, China
Test specification .....**:**	
Standard .....:	**IEEE 1528:2013** **47CFR §2.1093**
Test Report Form No .....:	LCSEMC-1.0
TRF Originator.....:	Shenzhen LCS Compliance Testing Laboratory Ltd.
Master TRF.....:	Dated 2011-03

Shenzhen LCS Compliance Testing Laboratory Ltd. All rights reserved.
This publication may be reproduced in whole or in part for non-commercial purposes as long as the Shenzhen LCS Compliance Testing Laboratory Ltd. is acknowledged as copyright owner and source of the material. Shenzhen LCS Compliance Testing Laboratory Ltd. takes no responsibility for and will not assume liability for damages resulting from the reader's interpretation of the reproduced material due to its placement and context.

Test item description .....:	**POS Terminal**
Trade Mark .....:	SmartPeak
Manufacturer .....:	**Shanghai SmartPeak Technology Co.,Ltd.**
Model/Type reference.....:	P2000L
Listed Models .....:	/
Ratings .....:	DC 7.40V
EUT Type .....:	Production Unit
Exposure category.....:	Genernal population /Uncontrolled environment
Hardware Version.....:	BSTB16014
Software Version .....:	V1.0
Result.....:	**PASS**

Compiled by:	**Supervised by:**	**Approved by:**
Aking Jin	Dick Su	Gavin Liang
Aking Jin/ File administrators	Dick Su/ Technique principal	Gavin Liang/ Manager

TEST REPORT

Test Report No. :	**LCS170906103AE1**	October 15, 2017 Date of issue

Equipment under Test	:	**POS Terminal**
Model /Type	:	P2000L
Listed Models	:	/
Applicant	:	**Shanghai SmartPeak Technology Co.,Ltd.**
Address	:	Room 1, No.3 Builiding, NO.295, Qianqiao Road, Fengxian District, Shanghai, China
Manufacturer	:	**Shanghai SmartPeak Technology Co.,Ltd.**
Address	:	Room 1, No.3 Builiding, NO.295, Qianqiao Road, Fengxian District, Shanghai, China
Factory	:	**Shanghai SmartPeak Technology Co.,Ltd.**
Address	:	Room 1, No.3 Builiding, NO.295, Qianqiao Road, Fengxian District, Shanghai, China

Test Result:	**PASS**

The test report merely corresponds to the test sample.
It is not permitted to copy extracts of these test result without the written permission of the test laboratory.

** Modifited History **

Revison	Description	Issued Data	Remark
Revsion 1.0	Initial Test Report Release	2017-10-15	Gavin Liang

This report shall not be reproduced except in full, without the written approval of Shenzhen LCS Compliance Testing Laboratory Ltd.

Contents

1. TEST STANDARDS 6

2. SUMMARY 7

2.1. General Remarks 7
2.2. Product Description 7
2.3. Statement of Compliance 8
2.4. Equipment under Test 9
2.5. EUT operation mode 9
2.6. TEST Configuration 9
2.7. EUT configuration 9

3. TEST ENVIRONMENT 10

3.1. Address of the test laboratory 10
3.2. Test Facility 10
3.3. Environmental conditions 10
3.4. SAR Limits 10
3.5. Equipments Used during the Test 11

4. SAR MEASUREMENTS SYSTEM CONFIGURATION 12

4.1. SAR Measurement Set-up 12
4.2. DASY5 E-field Probe System 13
4.3. Phantoms 13
4.4. Device Holder 14
4.5. Scanning Procedure 15
4.6. Data Storage and Evaluation 16
4.7. SAR Measurement System 17
4.8. Dielectric Performance 18
4.9. System Check 18
4.10. Measurement Procedures 20

5. TEST CONDITIONS AND RESULTS 31

5.1. Conducted Power Results 31
5.2. Manufacturing tolerance 43
5.3. Transmit Antennas Position 50
5.4. Standalone SAR Test Exclusion Considerations 50
5.5. Standalone Estimated SAR 51
5.6. Estimated Standalone SAR 53
5.7. SAR Measurement Results 53
5.8. SAR Reporting Results 54
5.9. Simultaneous TX SAR Considerations 57
5.10. SAR Measurement Variability 60
5.11. Measurement Uncertainty (300 MHz – 3 GHz) 61
5.12. General description of test procedures 61

6. SYSTEM CHECK RESULTS 62

7. SAR TEST GRAPH RESULTS 67

8. CALIBRATION CERTIFICATE 85

8.1 Probe Calibration Ceriticate 85
8.2 D835V2 Dipole Calibration Certificate 96
8.3 D1950V3 Calibration Certificate 104
8.4 D2450V2 Calibration Certificate 112

This report shall not be reproduced except in full, without the written approval of Shenzhen LCS Compliance Testing Laboratory Ltd.

8.5 D2600V2 Calibration Certificate 120
8.6 750 MHz Dipole Calibration Certificate 128
8.7 DAE4 Calibration Certificate 136

9. TEST SETUP PHOTOS 140

1. EXTERNAL PHOTOS OF THE EUT 144

1. TEST STANDARDS

The tests were performed according to following standards:

IEEE 1528-2013 (2014-06): Recommended Practice for Determining the Peak Spatial-Average Specific Absorption Rate (SAR) in the Human Head from Wireless Communications Devices: Measurement Techniques
IEEE Std. C95-3 (2002): IEEE Recommended Practice for the Measurement of Potentially Hazardous Electromagnetic Fields – RF and Microwave
IEEE Std. C95-1 (1992): IEEE Standard for Safety Levels with Respect to Human Exposure to Radio Frequency Electromagnetic Fields, 3 kHz to 300 GHz.
KDB 865664D01v01r04 (Augest 7, 2015): SAR Measurement Requirements for 100 MHz to 6 GHz
KDB 865664D02v01r02 (October 23, 2015): RF Exposure Compliance Reporting and Documentation Considerations
KDB 447498 D01 General RF Exposure Guidance v06 (October 23, 2015): Mobile and Portable Devices RF Exposure Procedures and Equipment Authorization Policies
KDB248227 D01 802.11 Wi-Fi SAR: SAR GUIDANCE FOR IEEE 802.11 (Wi-Fi) TRANSMITTERS
KDB941225 D01 3G SAR Procedures: 3G SAR MEAUREMENT PROCEDURES
KDB 941225 D05 SAR for LTE Devices: SAR Evaluation Considerations for LTE Devices
KDB 648474 D04: SAR Evaluation considersations for wireless handsets
2017 April TCB Workshop: SAR Testing for Handheld RFID/Barcode Scanners

This report shall not be reproduced except in full, without the written approval of Shenzhen LCS Compliance Testing Laboratory Ltd.

2. SUMMARY

2.1. General Remarks

Date of receipt of test sample	:	September 18, 2017
Testing commenced on	:	September 22, 2017
Testing concluded on	:	September 26, 2017

2.2. Product Description

The **Shanghai SmartPeak Technology Co.,Ltd.**'s Model: P2000L or the "EUT" as referred to in this report; more general information as follows, for more details, refer to the user's manual of the EUT;

General Description	
Product Name:	POS Terminal
Model/Type reference:	P2000L
Listed Model(s):	n/a
Modulation Type:	GMSK for GSM/GPRS, 8-PSK for EDGE,QPSK for UMTS, QPSK, 16QAM for LTE
Device category:	Portable Device
Exposure category:	General population/uncontrolled environment
EUT Type:	Production Unit
Hardware Version	BSTB16014
Software Version:	V1.0
Power supply:	DC 7.40V by Li-ion Battery(2000mAh) Input: AC 100-240 V 50/60Hz 0.45A Output: DC5V/2A
Hotspot:	Not Support
VoIP	Not Support
The EUT is GSM,WCDMA,LTE POS Terminal. the POS Terminal is intended for Multimedia Message Service (MMS) transmission. It is equipped with GPRS/EDGE class 12 for GSM850, PCS1900, WCDMA Band II, Band V, LTE Band 2, Band 5, Band 7, Band 12, and Bluetooth, WiFi, camera functions. For more information see the following datasheet	

Technical Characteristics	
GSM	
Support Networks	GSM, GPRS, EDGE
Support Band	GSM850, PCS1900
Frequency	GSM850: 824.2~848.8MHz GSM1900: 1850.2~1909.8MHz
Power Class:	GSM850:Power Class 4 PCS1900:Power Class 1
Modulation Type:	GMSK for GSM/GPRS; GMSK/8PSK For EGPRS
Antenna Information	PIFA Antenna 0.5dBi (max.) For GSM 850; 0.5dBi (max.) For PCS 1900
GSM Release Version	R99
GPRS Multislot Class	12
EGPRS Multislot Class	12
DTM Mode	Not Supported
UMTS	
Support Networks	WCDMA RMC12.2K,HSDPA,HSUPA
Operation Band:	WCDMA Band II, Band IV, Band V
Frequency Range	WCDMA Band II: 1852.4 ~ 1907.6MHz WCDMA Band V: 826.4 ~ 846.6MHz
Modulation Type:	QPSK for WCDMA/HSUPA/HSDPA
Power Class:	Class 3
WCDMA Release Version:	R99

HSDPA Release Version:	Release 8
HSUPA Release Version:	Release 6
DC-HSUPA Release Version:	Not Supported
Antenna Information	PIFA Antenna 0.5 dBi (max.) For WCDMA Band II 0.5 dBi (max.) For WCDMA Band V
LTE	
Support Band	LTE Band 2, Band 5, Band 7, Band12
Frequency Range	LTE Band 2:1850 – 1910 MHz LTE Band 5: 824 – 849 MHz LTE Band 7: 2500 – 2570 MHz LTE Band 12: 699 – 716 MHz
Power Class:	Class 3
Modulation Type:	QPSK/16QAM
LTE Release Version:	R8
VoLTE	Not Support
Antenna Information	PIFA Antenna, 0.5dBi (max.) For LTE FDD Band 2; 0.5dBi (max.) For LTE FDD Band 5; 0.5dBi (max.) For LTE FDD Band 7; 0.5dBi (max.) For LTE FDD Band 12;

WIFI 2.4G	
Supported Standards:	IEEE 802.11b/802.11g/802.11n HT20
Operation frequency:	2412 – 2462 MHz for IEEE 802.11b/g/n HT20
Type of Modulation:	CCK, OFDM
Data Rate:	1-11Mbps, 6-54Mbps, up to 130Mbps
Channel number:	IEEE 802.11b/g/n HT20: 11
Channel separation:	5MHz
Antenna Description	PIFA Antenna; 0.5dBi(Max.)
Bluetooth	
Bluetooth Version:	V4.0
Modulation:	GFSK(1Mbps) , π/4-DQPSK(2Mbps), 8DPSK(3Mbps)
Operation frequency:	2402MHz~2480MHz
Channel number:	40/79
Channel separation:	1MHz/2MHz
Antenna Description	PIFA Antenna; 0.5dBi(Max.)
NFC	
Operation frequency:	13.56 MHz
Modulation:	ASK
Antenna Description	Loop Antenna; 0.5dBi(Max)

2.3. Statement of Compliance

The maximum of results of SAR found during testing for P2000L are follows:

<Highest Reported standalone SAR Summary>

Classment Class	Frequency Band	Body-worn (Report SAR_{1-g} (W/Kg)	Handheld (Extremity) (Report SAR_{10-g} (W/Kg)
PCB	GSM 850	0.618	1.571
	GSM1900	0.450	0.582
	WCDMA Band V	0.576	1.440
	WCDMA Band II	0.496	0.803
	LTE Band 2	0.576	0.763
	LTE Band 5	0.585	1.373
	LTE Band 7	**0.677**	**1.892**
	LTE Band 12	0.598	1.760
DTS	WLAN2.4G	**0.488**	0.881

This device is in compliance with Specific Absorption Rate (SAR) for general population/uncontrolled exposure limits (1.6 W/kg) specified in FCC 47 CFR part 2 (2.1093) for Body-worn and Extremity exposure limit (4.0 W/kg) for Handheld, and ANSI/IEEE C95.1-2005, had been tested in accordance with the

measurement methods and procedures specified in IEEE 1528-2013.

<Highest Reported simultaneous SAR Summary>

Exposure Position	Frequency Band	Reported SAR_{1-g} (W/kg)	Classment Class	Highest Reported Simultaneous Transmission SAR_{1-g} (W/Kg)
Body-worn	LTE Band 7	0.677	PCB	**1.165**
	WIFI2.4G	0.488	DTS	
Exposure Position	**Frequency Band**	**Reported SAR_{10-g} (W/kg)**	**Classment Class**	**Highest Reported Simultaneous Transmission SAR_{10-g} (W/Kg)**
Handheld	LTE Band 7	1.892	PCB	**2.773**
	WIFI2.4G	0.881	DTS	

2.4. Equipment under Test

Power supply system utilised

Power supply voltage	:	○	120V / 60 Hz	○	115V / 60Hz
		○	12 V DC	○	24 V DC
		●	Other (specified in blank below)		

DC 7.40 V

2.5. EUT operation mode

The spatial peak SAR values were assessed for this systems. Battery and accessories shell be specified by the manufacturer. The EUT battery must be fully charged and checked periodically during the test to ascertain uniform power output.

2.6. TEST Configuration

Extremity exposure conditions

Devices that are designed or intended for use on extremities, or mainly operated in extremity only exposure conditions, i.e., hands, wrists, feet and ankles, may require extremity SAR evaluation. When the device also operates in close proximity to the user's body, SAR compliance for the body is also required. The 1-g body and 10-g extremity SAR Test Exclusion Thresholds in 4.3 should be applied to determine SAR test requirements. When extremity SAR testing is required, a flat phantom must be used if the exposure condition is more conservative than the actual use conditions;

Per April 2017 TCB workshop for SAR Testing for Handheld RFID/Barcode Scanners;

a. In general, do not test surface that faces away from user or user's hands unless there is an exposure concern;
b. Depending on form factor, use conditions, support for body-worn accessories, and other criteria, both 10-g extremity and 1-g Body-Worn SAR may have to be addressed;

2.7. EUT configuration

The following peripheral devices and interface cables were connected during the measurement:

Accessory name	Internal Identification	Model	Description	Remark
Battery	B1	335880	Safe Lithium Polymer Battery	performed

AE ID: is used to identify the test sample in the lab internally.

3. TEST ENVIRONMENT

3.1. Address of the test laboratory

Shenzhen LCS Compliance Testing Laboratory Ltd

1/F., Xingyuan Industrial Park, Tongda Road, Bao'an Avenue, Bao'an District, Shenzhen, Guangdong, China
The sites are constructed in conformance with the requirements of ANSI C63.4 (2014) and CISPR Publication 22.

3.2. Test Facility

The test facility is recognized, certified, or accredited by the following organizations:

CNAS Registration Number. is L4595.
FCC Registration Number. is 899208.
Industry Canada Registration Number. is 9642A-1.
VCCI Registration Number. is C-4260 and R-3804.
ESMD Registration Number. is ARCB0108.
UL Registration Number. is 100571-492.
TUV SUD Registration Number. is SCN1081.
TUV RH Registration Number. is UA 50296516-001
NVLAP Registration Code is 600167-0

3.3. Environmental conditions

During the measurement the environmental conditions were within the listed ranges:

Temperature:	18-25 ° C
Humidity:	40-65 %
Atmospheric pressure:	950-1050mbar

3.4. SAR Limits

FCC Limit

Exposure Limits	SAR (W/kg)	
	(General Population / Uncontrolled Exposure Environment)	(Occupational / Controlled Exposure Environment)
Spatial Average (averaged over the whole body)	0.08	0.4
Spatial Peak (averaged over any 1 g of tissue)	1.60	8.0
Spatial Peak (hands/wrists/feet/ankles averaged over 10 g)	4.0	20.0

Population/Uncontrolled Environments are defined as locations where there is the exposure of individual who have no knowledge or control of their exposure.

Occupational/Controlled Environments are defined as locations where there is exposure that may be incurred by people who are aware of the potential for exposure (i.e. as a result of employment or occupation).

This report shall not be reproduced except in full, without the written approval of Shenzhen LCS Compliance Testing Laboratory Ltd.

3.5. Equipments Used during the Test

Test Equipment	Manufacturer	Type/Model	Serial Number	Calibration	
				Last Calibration	Calibration Interval
Data Acquisition Electronics DAEx	SPEAG	DAE4	1315	2017/08/15	1
E-field Probe	SPEAG	EX3DV4	3842	2017/08/15	1
System Validation Dipole D750V3	SPEAG	D750V3	1163	2016/09/19	3
System Validation Dipole D835V2	SPEAG	D835V2	4d143	2016/10/10	3
System Validation Dipole D1950V3	SPEAG	D1950V3	1143	2016/10/12	3
System Validation Dipole D2450V2	SPEAG	D2450V2	898	2016/10/12	3
System Validation Dipole D2600V2	SPEAG	D2600V2	1120	2016/02/03	3
PC	Lenovo	G5005	MY42081102	/	/
Signal Generator	Angilent	E4438C	MY42081396	2017/09/22	1
Network Analyzer	Agilent	8753ES	US38432944	2017/09/22	1
Dielectric Probe Kit	Agilent	85070E	US44020288	/	/
Power Meter	R & S	NRVS	100469	2017/09/22	1
Power Sensor	R & S	NRV-Z81	100458	2017/09/22	1
Power Sensor	R & S	NRV-Z32	10057	2014/09/22	1
High Power Solid State Amplifier (80MHz~1000MHz)	Instruments for Industry	CMC150	M631-0627	2017/09/22	1

Note:

1) Per KDB865664D01 requirements for dipole calibration, the test laboratory has adopted three year extended calibration interval. Each measured dipole is expected to evalute with following criteria at least on annual interval.
   a) There is no physical damage on the dipole;
   b) System check with specific dipole is within 10% of calibrated values;
   c) The most recent return-loss results,measued at least annually,deviates by no more than 20% from the previous measurement;
   d) The most recent measurement of the real or imaginary parts of the impedance, measured at least annually is within 50 Ω from the provious measurement.
2) Network analyzer probe calibration against air, distilled water and a shorting block performed before measuring liquid parameters.

4. SAR Measurements System configuration

4.1. SAR Measurement Set-up

The DASY5 system for performing compliance tests consists of the following items:

A standard high precision 6-axis robot (Stäubli RX family) with controller and software. An arm extension for accommodating the data acquisition electronics (DAE).

A dosimetric probe, i.e. an isotropic E-field probe optimized and calibrated for usage in tissue simulating liquid. The probe is equipped with an optical surface detector system.

A data acquisition electronic (DAE) which performs the signal amplification, signal multiplexing, AD-conversion, offset measurements, mechanical surface detection, collision detection, etc. The unit is battery powered with standard or rechargeable batteries. The signal is optically transmitted to the EOC.

A unit to operate the optical surface detector which is connected to the EOC.

The Electro-Optical Coupler (EOC) performs the conversion from the optical into a digital electric signal of the DAE. The EOC is connected to the DASY5 measurement server.

The DASY5 measurement server, which performs all real-time data evaluation for field measurements and surface detection, controls robot movements and handles safety operation. A computer operating Windows 2003.

DASY5 software and SEMCAD data evaluation software.

Remote control with teach panel and additional circuitry for robot safety such as warning lamps, etc.

The generic twin phantom enabling the testing of left-hand and right-hand usage.

The device holder for handheld Mobile Phones.

Tissue simulating liquid mixed according to the given recipes.

System validation dipoles allowing to validate the proper functioning of the system.

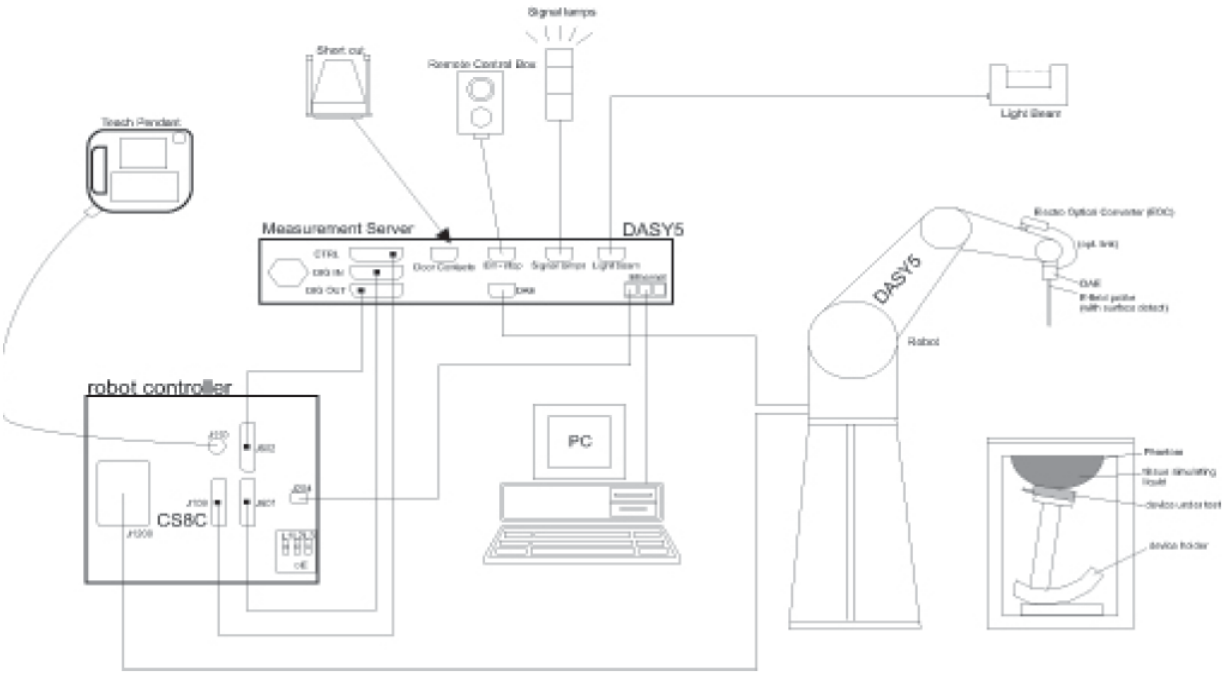

4.2. DASY5 E-field Probe System

The SAR measurements were conducted with the dosimetric probe EX3DV4 (manufactured by SPEAG), designed in the classical triangular configuration and optimized for dosimetric evaluation.

Probe Specification

Construction	Symmetrical design with triangular core Interleaved sensors Built-in shielding against static charges PEEK enclosure material (resistant to organic solvents, e.g., DGBE)
Calibration	ISO/IEC 17025 calibration service available.
Frequency	10 MHz to 4 GHz; Linearity: ± 0.2 dB (30 MHz to 4 GHz)
Directivity	± 0.2 dB in HSL (rotation around probe axis) ± 0.3 dB in tissue material (rotation normal to probe axis)
Dynamic Range	5 µW/g to > 100 mW/g; Linearity: ± 0.2 dB
Dimensions	Overall length: 337 mm (Tip: 20 mm) Tip diameter: 3.9 mm (Body: 12 mm) Distance from probe tip to dipole centers: 2.0 mm
Application	General dosimetry up to 4 GHz Dosimetry in strong gradient fields Compliance tests of Mobile Phones
Compatibility	DASY3, DASY4, DASY52 SAR and higher, EASY4/MRI

Isotropic E-Field Probe

The isotropic E-Field probe has been fully calibrated and assessed for isotropicity, and boundary effect within a controlled environment. Depending on the frequency for which the probe is calibrated the method utilized for calibration will change.

The E-Field probe utilizes a triangular sensor arrangement as detailed in the diagram below:

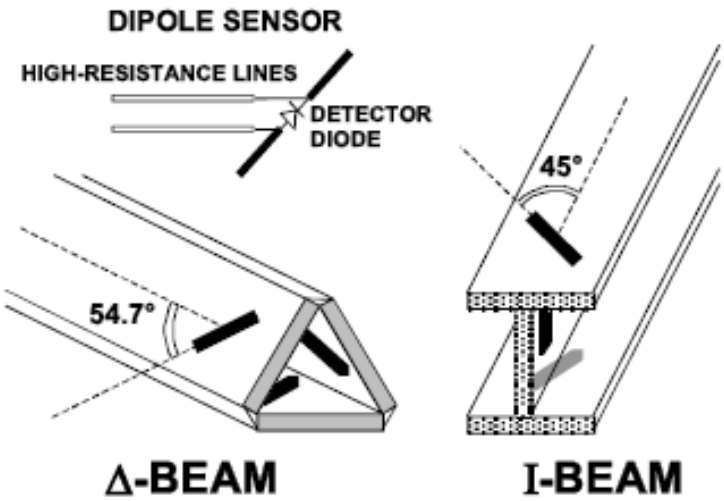

4.3. Phantoms

SAM Twin Phantom
The phantom used for all tests i.e. for both system checks and device testing, was the twin-headed "SAM Phantom", manufactured by SPEAG. The SAM twin phantom is a fiberglass shell phantom with 2mm shell thickness (except the ear region, where shell thickness increases to 6mm).
System checking was performed using the flat section, whilst Head SAR tests used the left and right head

profile sections. Body SAR testing also used the flat section between the head profiles.

Shell Thickness	2mm +/- 0.2 mm; The ear region: 6mm	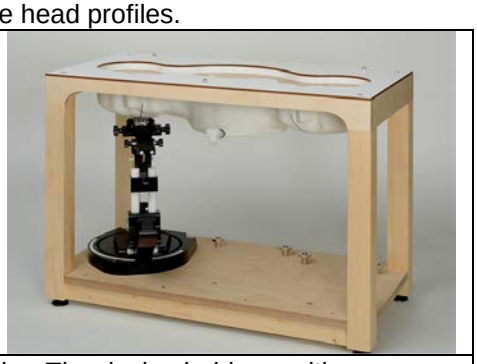
Filling Volume	Approximately 25 liters	
Dimensions	Major axis:600mm; Minor axis:400mm;	
Measurement Areas	Left hand Right hand Flat phantom	
The bottom plate contains three pairs of bolts for locking the device holder. The device holder positions are adjusted to the standard measurement positions in the three sections. A white cover is provided to cover the phantom during off-periods to prevent water evaporation and changes in the liquid parameters. Free space scans of devices on top of this phantom cover are possible. Three reference marks are provided on the phantom counter. These reference marks are used to teach the absolute phantom position relative to the robot.		

The following figure shows the definition of reference point:

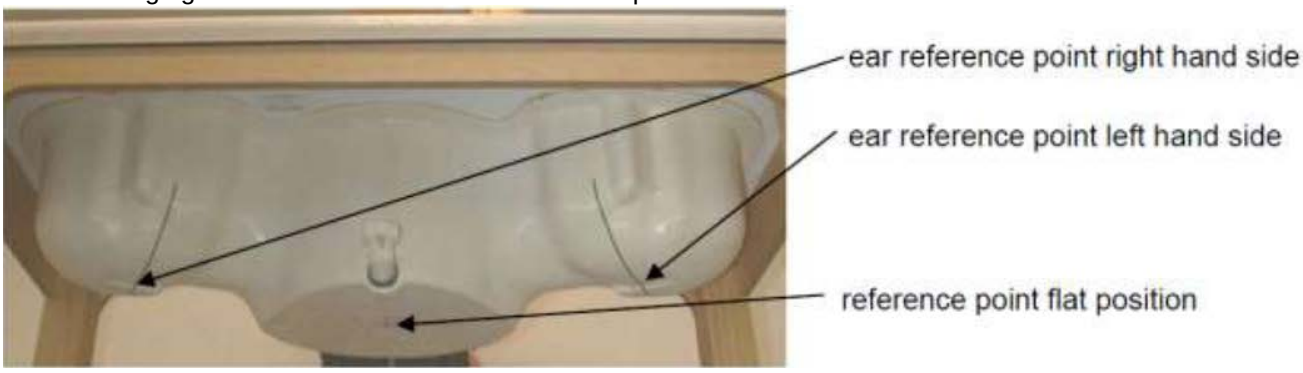

ELI4 Phantom
Phantom for compliance testing of handheld and body-mounted wireless devices in the frequency range of 30 MHz to 6 GHz. ELI is fully compatible with the IEC 62209-2 standard and all known tissue simulating liquids. ELI has been optimized regarding its performance and can be integrated into our standard phantom tables. A cover prevents evaporation of the liquid. Reference markings on the phantom allow installation of the complete setup, including all predefined phantom positions and measurement grids, by teaching three points. The phantom is compatible with all SPEAG dosimetric probes and dipoles.

Shell Thickness	2mm +/- 0.2 mm	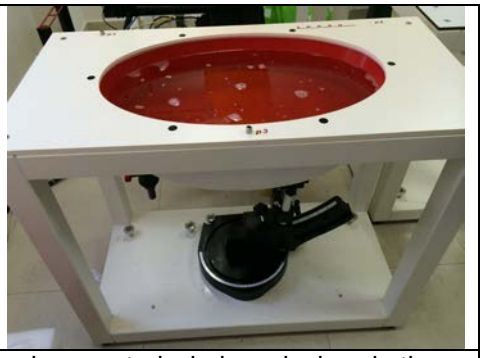
Filling Volume	Approximately 30 liters	
Dimensions	Major axis:600mm; Minor axis:400mm;	
Measurement Areas	Flat phantom	
The ELI4 phantom is intended for compliance testing of handheld and body-mounted wireless devices in the frequency range of 30MHz to 6GHz. ELI4 is fully compatible with the latest draft of the standard IEC 62209-2 and all known tissue simulating liquids.		

The phantom shell material is resistant to all ingredients used in the tissue-equivalent liquid recipes. The shell of the phantom including ear spacers is constructed from low permittivity and low loss material, with a relative permittivity ≤5 and a loss tangent ≤0.05.

4.4. Device Holder

The device was placed in the device holder (illustrated below) that is supplied by SPEAG as an integral part of the DASY system.

The DASY device holder is designed to cope with the different positions given in the standard. It has two scales for device rotation (with respect to the body axis) and device inclination (with respect to the line between the ear reference points). The rotation centers for both scales is the ear reference point (ERP). Thus the device needs no repositioning when changing the angles.

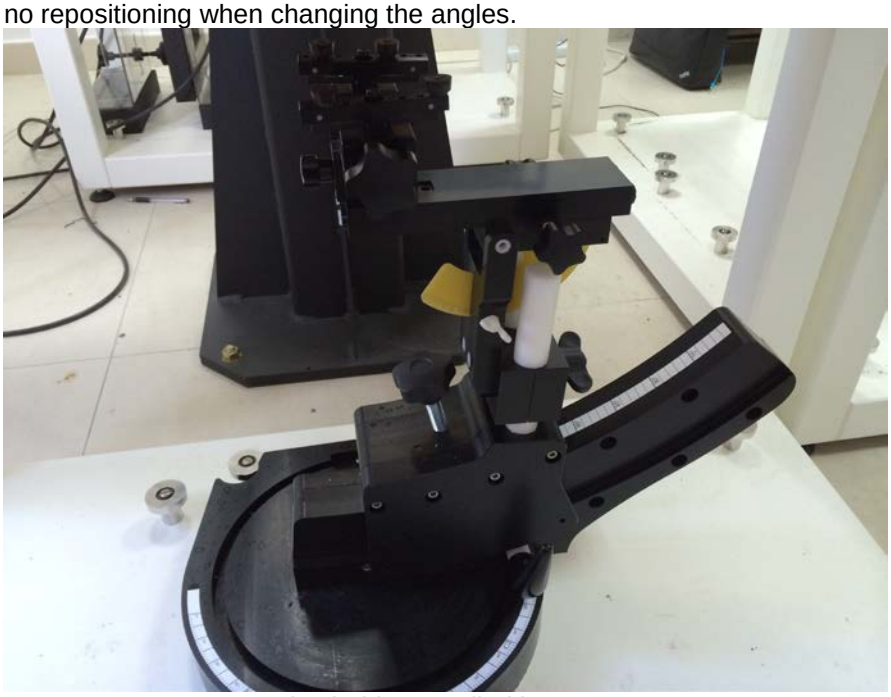

Device holder supplied by SPEAG

4.5. Scanning Procedure

The DASY5 installation includes predefined files with recommended procedures for measurements and validation. They are read-only document files and destined as fully defined but unmeasured masks. All test positions (head or body-worn) are tested with the same configuration of test steps differing only in the grid definition for the different test positions.

The “reference” and “drift” measurements are located at the beginning and end of the batch process. They measure the field drift at one single point in the liquid over the complete procedure. The indicated drift is mainly the variation of the DUT’s output power and should vary max. ± 5 %.

The “surface check” measurement tests the optical surface detection system of the DASY5 system by repeatedly detecting the surface with the optical and mechanical surface detector and comparing the results. The output gives the detecting heights of both systems, the difference between the two systems and the standard deviation of the detection repeatability. Air bubbles or refraction in the liquid due to separation of the sugar-water mixture gives poor repeatability (above ± 0.1mm). To prevent wrong results tests are only executed when the liquid is free of air bubbles. The difference between the optical surface detection and the actual surface depends on the probe and is specified with each probe (It does not depend on the surface reflectivity or the probe angle to the surface within ± 30°.)

Area Scan
The Area Scan is used as a fast scan in two dimensions to find the area of high field values before running a detailed measurement around the hot spot.Before starting the area scan a grid spacing of 15 mm x 15 mm is set. During the scan the distance of the probe to the phantom remains unchanged. After finishing area scan, the field maxima within a range of 2 dB will be ascertained.

Zoom Scan
Zoom Scans are used to estimate the peak spatial SAR values within a cubic averaging volume containing 1 g and 10 g of simulated tissue. The default Zoom Scan is done by 7x7x7 points within a cube whose base is centered around the maxima found in the preceding area scan.

Spatial Peak Detection
The procedure for spatial peak SAR evaluation has been implemented and can determine values of massesof 1g and 10g, as well as for user-specific masses.The DASY5 system allows evaluations that combine measured data and robot positions, such as: • maximum search • extrapolation • boundary correction • peak search for averaged SAR During a maximum search, global and local maxima searches are automatically performed in 2-D after each Area Scan measurement with at least 6 measurement points. It is based on the evaluation of the local SAR gradient calculated by the Quadratic Shepard’s method. The algorithm will find the

global maximum and all local maxima within -2 dB of the global maxima for all SAR distributions.

Extrapolation routines are used to obtain SAR values between the lowest measurement points and the inner phantom surface. The extrapolation distance is determined by the surface detection distance and the probe sensor offset. Several measurements at different distances are necessary for the extrapolation. Extrapolation routines require at least 10 measurement points in 3-D space. They are used in the Zoom Scan to obtain SAR values between the lowest measurement points and the inner phantom surface. The routine uses the modified Quadratic Shepard's method for extrapolation. For a grid using 7x7x7 measurement points with 5mm resolution amounting to 343 measurement points, the uncertainty of the extrapolation routines is less than 1% for 1g and 10g cubes.

A Z-axis scan measures the total SAR value at the x-and y-position of the maximum SAR value found during the cube 7x7x7 scan. The probe is moved away in z-direction from the bottom of the SAM phantom in 5mm steps.

4.6. Data Storage and Evaluation

Data Storage

The DASY5 software stores the acquired data from the data acquisition electronics as raw data (in microvolt readings from the probe sensors), together with all necessary software parameters for the data evaluation (probe calibration data, liquid parameters and device frequency and modulation data) in measurement files with the extension ".DA4". The software evaluates the desired unit and format for output each time the data is visualized or exported. This allows verification of the complete software setup even after the measurement and allows correction of incorrect parameter settings. For example, if a measurement has been performed with a wrong crest factor parameter in the device setup, the parameter can be corrected afterwards and the data can be re-evaluated.

The measured data can be visualized or exported in different units or formats, depending on the selected probe type ([V/m], [A/m], [°C], [mW/g], [mW/cm²], [dBrel], etc.). Some of these units are not available in certain situations or show meaningless results, e.g., a SAR output in a lossless media will always be zero. Raw data can also be exported to perform the evaluation with other software packages.

Data Evaluation

The SEMCAD software automatically executes the following procedures to calculate the field units from the microvolt readings at the probe connector. The parameters used in the evaluation are stored in the configuration modules of the software:

Probe parameters:	- Sensitivity	Normi, ai0, ai1, ai2
	- Conversion factor	ConvFi
	- Diode compression point	Dcpi
Device parameters:	- Frequency	f
	- Crest factor	cf
Media parameters:	- Conductivity	σ
	- Density	ρ

These parameters must be set correctly in the software. They can be found in the component documents or they can be imported into the software from the configuration files issued for the DASY5 components. In the direct measuring mode of the multimeter option, the parameters of the actual system setup are used. In the scan visualization and export modes, the parameters stored in the corresponding document files are used.

The first step of the evaluation is a linearization of the filtered input signal to account for the compression characteristics of the detector diode. The compensation depends on the input signal, the diode type and the DC-transmission factor from the diode to the evaluation electronics. If the exciting field is pulsed, the crest factor of the signal must be known to correctly compensate for peak power. The formula for each channel can be given as:

$$V_i = U_i + U_i^2 \cdot \frac{cf}{dcp_i}$$

With Vi = compensated signal of channel i (i = x, y, z)
Ui = input signal of channel i (i = x, y, z)
cf = crest factor of exciting field (DASY parameter)
dcpi = diode compression point (DASY parameter)

From the compensated input signals the primary field data for each channel can be evaluated:

$$\text{E} - \text{fieldprobes}: \qquad E_i = \sqrt{\frac{V_i}{Norm_i \cdot ConvF}}$$

$$\text{H} - \text{fieldprobes}: \qquad H_i = \sqrt{V_i} \cdot \frac{a_{i0} + a_{i1}f + a_{i2}f^2}{f}$$

With Vi = compensated signal of channel i (i = x, y, z)
Normi = sensor sensitivity of channel i (i = x, y, z)
[mV/(V/m)2] for E-field Probes
ConvF = sensitivity enhancement in solution
aij = sensor sensitivity factors for H-field probes
f = carrier frequency [GHz]
Ei = electric field strength of channel i in V/m
Hi = magnetic field strength of channel i in A/m

The RSS value of the field components gives the total field strength (Hermitian magnitude):

$$E_{tot} = \sqrt{E_x^2 + E_y^2 + E_z^2}$$

The primary field data are used to calculate the derived field units.

$$SAR = E_{tot}^2 \cdot \frac{\sigma}{\rho \cdot 1'000}$$

with SAR = local specific absorption rate in mW/g
Etot = total field strength in V/m
σ = conductivity in [mho/m] or [Siemens/m]
ρ = equivalent tissue density in g/cm3

Note that the density is normally set to 1 (or 1.06), to account for actual brain density rather than the density of the simulation liquid.

4.7. SAR Measurement System

The SAR measurement system being used is the DASY5 system, the system is controlled remotely from a PC, which contains the software to control the robot and data acquisition equipment. The software also displays the data obtained from test scans.

In operation, the system first does an area (2D) scan at a fixed depth within the liquid from the inside wall of the phantom. When the maximum SAR point has been found, the system will then carry out a 3D scan centred at that point to determine volume averaged SAR level.

4.7.1 Tissue Dielectric Parameters for Head and Body Phantoms

The liquid is consisted of water,salt,Glycol,Sugar,Preventol and Cellulose.The liquid has previously been proven to be suited for worst-case. It's satisfying the latest tissue dielectric parameters requirements proposed by the KDB865664.

Target Frequency	Head		Body	
(MHz)	ε_r	σ(S/m)	ε_r	σ(S/m)
150	52.3	0.76	61.9	0.80
300	45.3	0.87	58.2	0.92
450	43.5	0.87	56.7	0.94
835	41.5	0.90	55.2	0.97
900	41.5	0.97	55.0	1.05
915	41.5	0.98	55.0	1.06
1450	40.5	1.20	54.0	1.30
1610	40.3	1.29	53.8	1.40
1800-2000	40.0	1.40	53.3	1.52
2450	39.2	1.80	52.7	1.95
3000	38.5	2.40	52.0	2.73
5800	35.3	5.27	48.2	6.00

(ε_r = relative permittivity, σ = conductivity and ρ = 1000 kg/m^3)

4.8. Dielectric Performance

The liquid is consisted of water,salt,Glycol,Sugar,Preventol and Cellulose.The liquid has previously been proven to be suited for worst-case.It's satisfying the latest tissue dielectric parameters requirements proposed by the KDB865664.

The composition of the tissue simulating liquid

Ingredient	750MHz		835MHz		1800 MHz		1900 MHz		2450MHz		2600MHz		5000MHz	
(% Weight)	Head	Body	Head	Body	Head	Body	Head	Body	Head	Body	Head	Body	Head	Body
Water	39.28	51.3	41.45	52.5	54.5	40.2	54.9	40.4	62.7	73.2	60.3	71.4	65.5	78.6
Preventol	0.10	0.10	0.10	0.10	0.00	0.00	0.00	0.00	0.00	0.00	0.00	0.00	0.00	0.00
HEC	1.00	1.00	1.00	1.00	0.00	0.00	0.00	0.00	0.00	0.00	0.00	0.00	0.00	0.00
DGBE	0.00	0.00	0.00	0.00	45.33	59.31	44.92	59.10	36.80	26.70	39.10	28.40	0.00	0.00
Triton X-100	0.00	0.00	0.00	0.00	0.00	0.00	0.00	0.00	0.00	0.00	0.00	0.00	17.2	10.7

Target Frequency (MHz)	Head		Body	
	ε_r	$\sigma(S/m)$	ε_r	$\sigma(S/m)$
150	52.3	0.76	61.9	0.80
300	45.3	0.87	58.2	0.92
450	43.5	0.87	56.7	0.94
835	41.5	0.90	55.2	0.97
900	41.5	0.97	55.0	1.05
915	41.5	0.98	55.0	1.06
1450	40.5	1.20	54.0	1.30
1610	40.3	1.29	53.8	1.40
1800-2000	40.0	1.40	53.3	1.52
2450	39.2	1.80	52.7	1.95
3000	38.5	2.40	52.0	2.73
5800	35.3	5.27	48.2	6.00

Dielectric Performance of Body Tissue Simulating Liquid

Tissue Type	Measured Frequency (MHz)	Target Tissue		Measured Tissue				Liquid Temp.	Test Data
		σ	ε_r	σ	Dev.	ε_r	Dev.		
750B	750	0.96	55.53	0.98	2.08%	56.91	2.49%	22.1	2017/09/26
835B	835	0.97	55.20	0.98	1.03%	56.75	2.81%	22.1	2017/09/22
1950B	1950	1.52	53.30	1.55	1.97%	54.12	1.54%	22.1	2017/09/23
2450B	2450	1.95	52.70	1.97	1.03%	52.95	0.47%	22.1	2017/09/24
2600B	2600	2.16	52.51	2.19	1.39%	53.13	1.18%	22.1	2017/09/25

4.9. System Check

The purpose of the system check is to verify that the system operates within its specifications at the decice test frequency.The system check is simple check of repeatability to make sure that the system works correctly at the time of the compliance test;

System check results have to be equal or near the values determined during dipole calibration with the relevant liquids and test system (±10 %).
System check is performed regularly on all frequency bands where tests are performed with the DASY5 system.

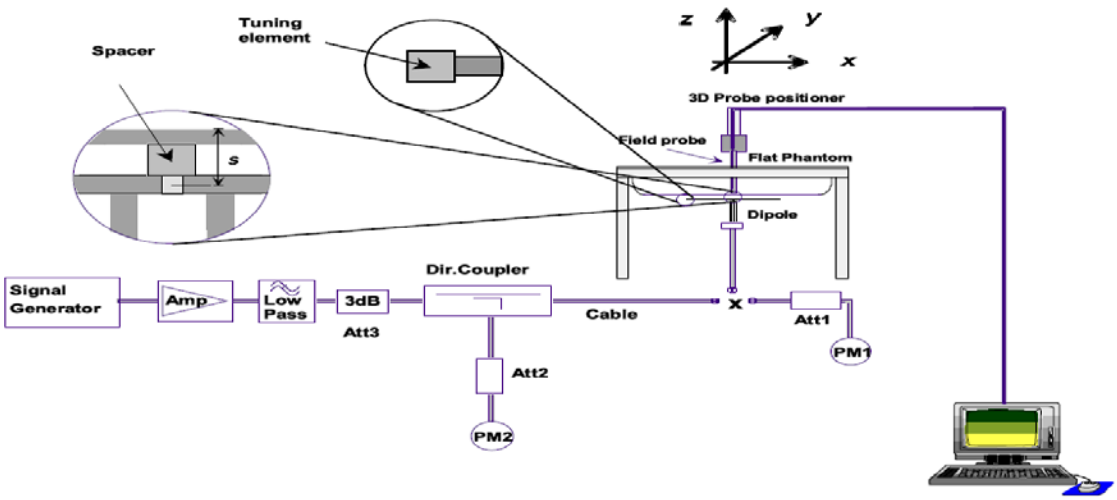

The output power on dipole port must be calibrated to 20 dBm (100mW) before dipole is connected.

Justification for Extended SAR Dipole Calibrations

Referring to KDB 865664D01V01r04, if dipoles are verified in return loss (<-20dB, within 20% of prior calibration), and in impedance (within 5 ohm of prior calibration), the annual calibration is not necessary and the calibration interval can be extended.While calibration intervals not exceed 3 years.

D750V3 Extend Dipole Calibrations

D750V3 Head						
Date of Measurement	Return-Loss (dB)	Delta (%)	Real Impedance (ohm)	Delta (ohm)	Imaginary Impedance (ohm)	Delta (ohm)
2016-09-19	-26.8		54.5		-1.8j	
2017-09-15	-28.3	-5.60%	55.174	0.174	-1.987j	-0.187j
D750V3 Body						
Date of Measurement	Return-Loss (dB)	Delta (%)	Real Impedance (ohm)	Delta (ohm)	Imaginary Impedance (ohm)	Delta (ohm)
2016-09-19	-29.0		49.8		-3.5j	
2017-09-15	-28.6	1.38%	49.926	0.126	-3.745j	-0.245j

D2600V2 Extend Dipole Calibrations

D2600V2 Head						
Date of Measurement	Return-Loss (dB)	Delta (%)	Real Impedance (ohm)	Delta (ohm)	Imaginary Impedance (ohm)	Delta (ohm)
2016-02-03	-25.0		50.7		-5.6j	
2017-01-24	-26.1	-4.40%	51.226	0.526	-5.944j	-0.344j
D2600V2 Body						
Date of Measurement	Return-Loss (dB)	Delta (%)	Real Impedance (ohm)	Delta (ohm)	Imaginary Impedance (ohm)	Delta (ohm)
2016-02-03	-25.0		47.0		-4.5j	
2017-01-24	-26.4	-5.60%	48.178	1.178	-4.919j	-0.419j

System Check in Body Tissue Simulating Liquid

Frequency (MHz)	Test Date	Dielectric Parameters		Temp	100mW Measured		1W Normalized		1W Target		Limit (±10% Deviation)	
		ε_r	σ(s/m)		SAR_{1g}	SAR_{10g}	SAR_{1g}	SAR_{10g}	SAR_{1g}	SAR_{10g}	SAR_{1g}	SAR_{10g}
750	2017/09/26	56.91	0.98	22.1	0.841	0.588	8.41	5.88	8.58	5.64	-1.98%	4.08%
835	2017/09/22	56.75	0.98	22.1	0.979	0.652	9.79	6.52	9.49	6.31	3.16%	3.33%
1950	2017/09/23	54.12	1.55	22.1	4.12	2.16	41.20	21.60	40.3	21.0	2.23%	2.86%
2450	2017/09/24	52.95	1.97	22.1	5.16	2.49	51.60	24.90	50.8	23.9	1.57%	4.18%
2600	2017/09/25	53.13	2.19	22.1	5.08	2.23	50.80	22.30	52.0	23.3	-2.31%	-4.29%

This report shall not be reproduced except in full, without the written approval of Shenzhen LCS Compliance Testing Laboratory Ltd.

4.10. Measurement Procedures

4.10.1 Tests to be performed

In order to determine the highest value of the peak spatial-average SAR of a handset, all device positions, configurations and operational modes shall be tested for each frequency band according to steps 1 to 3 below. A flowchart of the test process is shown in Picture 11.1.

Step 1: The tests described in 11.2 shall be performed at the channel that is closest to the centre of the transmit frequency band (f_c) for:

a). all device positions (cheek and tilt, for both left and right sides of the SAM phantom;

b). all configurations for each device position in a), e.g., antenna extended and retracted, and

c). all operational modes, e.g., analogue and digital, for each device position in a) and configuration in b) in each frequency band.

If more than three frequencies need to be tested according to 11.1 (i.e., $N_c > 3$), then all frequencies, configurations and modes shall be tested for all of the above test conditions.

Step 2: For the condition providing highest peak spatial-average SAR determined in Step 1, perform all tests described in 11.2 at all other test frequencies, i.e., lowest and highest frequencies. In addition, for all other conditions (device position, configuration and operational mode) where the peak spatial-average SAR value determined in Step 1 is within 3 dB of the applicable SAR limit, it is recommended that all other test frequencies shall be tested as well.

Step 3: Examine all data to determine the highest value of the peak spatial-average SAR found in Steps 1 to 2.

This report shall not be reproduced except in full, without the written approval of Shenzhen LCS Compliance Testing Laboratory Ltd.

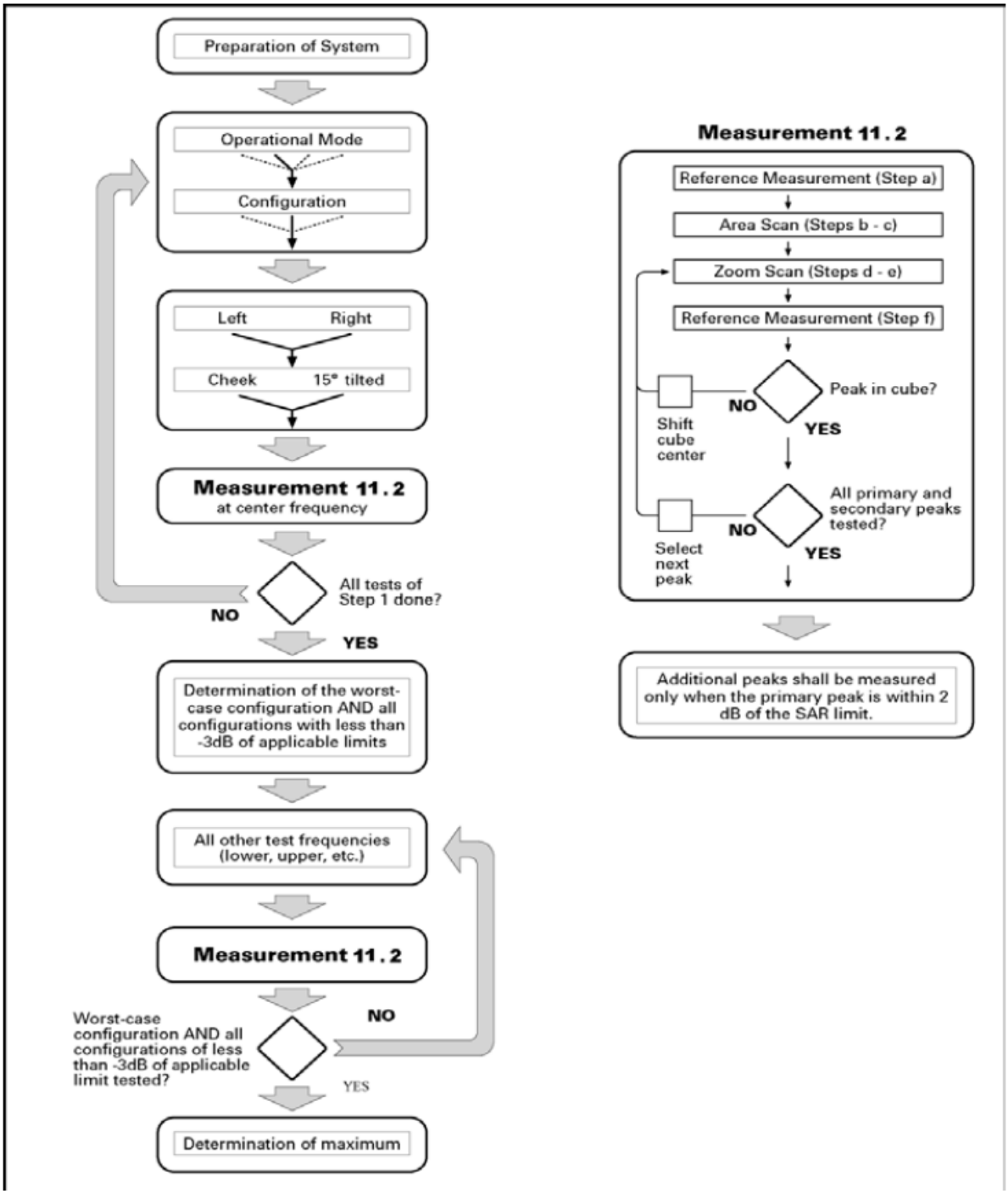

Picture 10.1 Block diagram of the tests to be performed

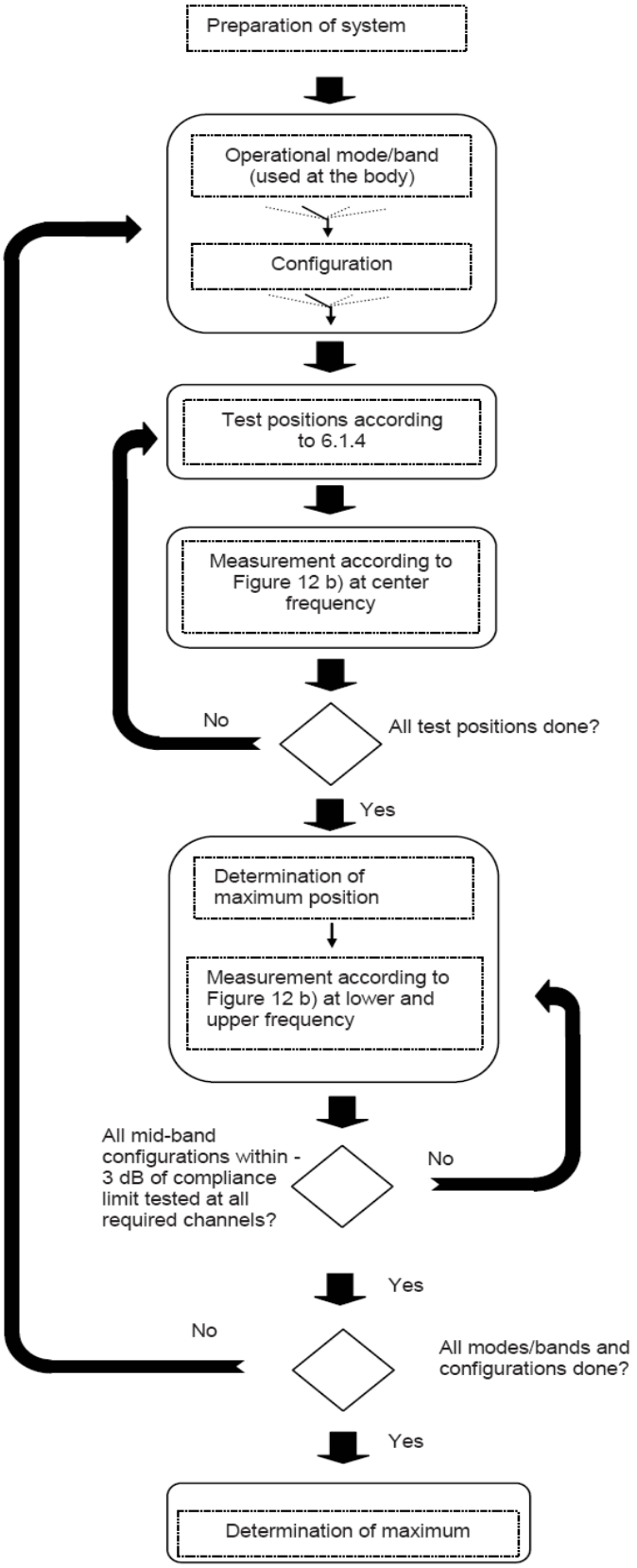

Figure 12a – Tests to be performed

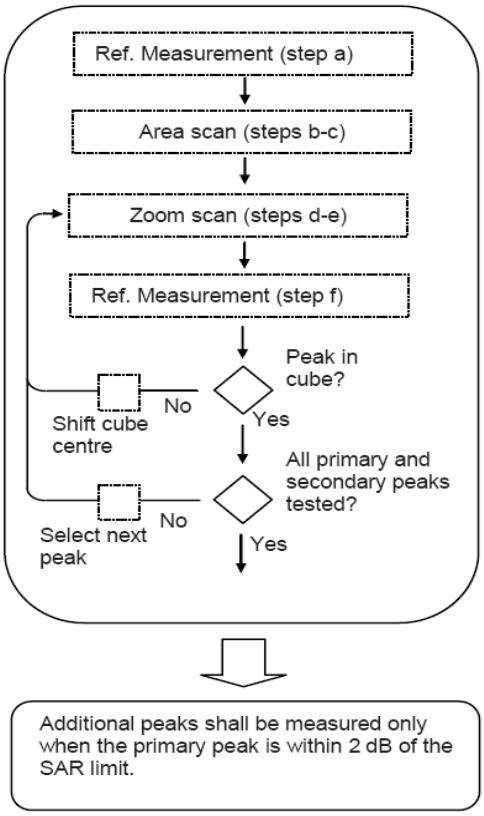

Figure 12b – General procedure

Picture 12 Block diagram of the tests to be performed

Measurement procedure

The following procedure shall be performed for each of the test conditions (see Picture 11) described in 11.1:

a) Measure the local SAR at a test point within 8 mm or less in the normal direction from the inner surface of the phantom.

b) Measure the two-dimensional SAR distribution within the phantom (area scan procedure). The boundary of the measurement area shall not be closer than 20 mm from the phantom side walls. The distance between the measurement points should enable the detection of the location of local maximum with an

accuracy of better than half the linear dimension of the tissue cube after interpolation. A maximum grip spacing of 20 mm for frequencies below 3 GHz and (60/f [GHz]) mm for frequencies of 3GHz and greater is recommended. The maximum distance between the geometrical centre of the probe detectors and the inner surface of the phantom shall be 5 mm for frequencies below 3 GHz andδln(2)/2 mm for frequencies of 3 GHz and greater, whereδis the plane wave skin depth and ln(x) is the natural logarithm. The maximum variation of the sensor-phantom surface shall be ±1 mm for frequencies below 3 GHz and ±0.5 mm for frequencies of 3 GHz and greater. At all measurement points the angle of the probe with respect to the line normal to the surface should be less than 5°. If this cannot be achieved for a measurement distance to the phantom inner surface shorter than the probe diameter, additional measurement distance to the phantom inner surface shorter than the probe diameter, additional

c) From the scanned SAR distribution, identify the position of the maximum SAR value, in addition identify the positions of any local maxima with SAR values within 2 dB of the maximum value that are not within the zoom-scan volume; additional peaks shall be measured only when the primary peak is within 2 dB of the SAR limit. This is consistent with the 2 dB threshold already stated;
d) Measure the three-dimensional SAR distribution at the local maxima locations identified in step
e) The horizontal grid step shall be (24 / f[GHz]) mm or less but not more than 8 mm. The minimum zoom size of 30 mm by 30 mm and 30 mm for frequencies below 3 GHz. For higher frequencies, the minimum zoom size of 22 mm by 22 mm and 22 mm. The grip step in the vertical direction shall be (8-f[GHz]) mm or less but not more than 5 mm, if uniform spacing is used. If variable spacing is used in the vertical direction, the maximum spacing between the two closest measured points to the phantom shell shall be (12 / f[GHz]) mm or less but not more than 4 mm, and the spacing between father points shall increase by an incremental factor not exceeding 1.5. When variable spacing is used, extrapolation routines shall be tested with the same spacing as used in measurements. The maximum distance between the geometrical centre of the probe detectors and the inner surface of the phantom shall be 5 mm for frequencies below 3 GHz and δln(2)/2 mm for frequencies of 3 GHz and greater, where δis the plane wave skin depth and ln(x) is the natural logarithm. Separate grids shall be centered on each of the local SAR maxima found in step c). Uncertainties due to field distortion between the media boundary and the dielectric enclosure of the probe should also be minimized, which is achieved is the distance between the phantom surface and physical tip of the probe is larger than probe tip diameter. Other methods may utilize correction procedures for these boundary effects that enable high precision measurements closer than half the probe diameter. For all measurement points, the angle of the probe with respect to the flat phantom surface shall be less than 5. If this cannot be achieved an additional uncertainty evaluation is needed.
f) Use post processing(e.g. interpolation and extrapolation) procedures to determine the local SAR values at the spatial resolution needed for mass averaging.

Measurement procedure

The following procedure shall be performed for each of the test conditions (see Picture 11) described in 11.1:

g) Measure the local SAR at a test point within 8 mm or less in the normal direction from the inner surface of the phantom.
h) Measure the two-dimensional SAR distribution within the phantom (area scan procedure). The boundary of the measurement area shall not be closer than 20 mm from the phantom side walls. The distance between the measurement points should enable the detection of the location of local maximum with an accuracy of better than half the linear dimension of the tissue cube after interpolation. A maximum grip spacing of 20 mm for frequencies below 3 GHz and (60/f [GHz]) mm for frequencies of 3GHz and greater is recommended. The maximum distance between the geometrical centre of the probe detectors and the inner surface of the phantom shall be 5 mm for frequencies below 3 GHz andδln(2)/2 mm for frequencies of 3 GHz and greater, whereδis the plane wave skin depth and ln(x) is the natural logarithm. The maximum variation of the sensor-phantom surface shall be ±1 mm for frequencies below 3 GHz and ±0.5 mm for frequencies of 3 GHz and greater. At all measurement points the angle of the probe with respect to the line normal to the surface should be less than 5°. If this cannot be achieved for a measurement distance to the phantom inner surface shorter than the probe diameter, additional measurement distance to the phantom inner surface shorter than the probe diameter, additional
i) From the scanned SAR distribution, identify the position of the maximum SAR value, in addition identify the positions of any local maxima with SAR values within 2 dB of the maximum value that are not within the zoom-scan volume; additional peaks shall be measured only when the primary peak is within 2 dB of the SAR limit. This is consistent with the 2 dB threshold already stated;
j) Measure the three-dimensional SAR distribution at the local maxima locations identified in step
k) The horizontal grid step shall be (24 / f[GHz]) mm or less but not more than 8 mm. The minimum zoom size of 30 mm by 30 mm and 30 mm for frequencies below 3 GHz. For higher frequencies, the minimum zoom size of 22 mm by 22 mm and 22 mm. The grip step in the vertical direction shall be (8-f[GHz]) mm or less but not more than 5 mm, if uniform spacing is used. If variable spacing is used in the vertical direction, the maximum spacing between the two closest measured points to the phantom shell shall be (12 / f[GHz]) mm or less but not more than 4 mm, and the spacing between father points shall increase by an incremental factor not exceeding 1.5. When variable spacing is used, extrapolation routines shall be tested with the same spacing as used in measurements. The maximum distance between the geometrical

centre of the probe detectors and the inner surface of the phantom shall be 5 mm for frequencies below 3 GHz and δln(2)/2 mm for frequencies of 3 GHz and greater, where δis the plane wave skin depth and ln(x) is the natural logarithm. Separate grids shall be centered on each of the local SAR maxima found in step c). Uncertainties due to field distortion between the media boundary and the dielectric enclosure of the probe should also be minimized, which is achieved is the distance between the phantom surface and physical tip of the probe is larger than probe tip diameter. Other methods may utilize correction procedures for these boundary effects that enable high precision measurements closer than half the probe diameter. For all measurement points, the angle of the probe with respect to the flat phantom surface shall be less than 5. If this cannot be achieved an additional uncertainty evaluation is needed.

l) Use post processing(e.g. interpolation and extrapolation) procedures to determine the local SAR values at the spatial resolution needed for mass averaging.

4.10.2 General Measurement Procedure

The area and zoom scan resolutions specified in the table below must be applied to the SAR measurements and fully documented in SAR reports to qualify for TCB approval. Probe boundary effect error compensation is required for measurements with the probe tip closer than half a probe tip diameter to the phantom surface. Both the probe tip diameter and sensor offset distance must satisfy measurement protocols; to ensure probe boundary effect errors are minimized and the higher fields closest to the phantom surface can be correctly measured and extrapolated to the phantom surface for computing 1-g SAR. Tolerances of the post-processing algorithms must be verified by the test laboratory for the scan resolutions used in the SAR measurements, according to the reference distribution functions specified in IEEE Std 1528-2003. The results should be documented as part of the system validation records and may be requested to support test results when all the measurement parameters in the following table are not satisfied.

			≤ 3 GHz	> 3 GHz
Maximum distance from closest measurement point (geometric center of probe sensors) to phantom surface			5 mm ±1 mm	½· δ ·ln(2) mm ± 0.5 mm
Maximum probe angle from probe axis to phantom surface normal at the measurement location			30° ± 1°	20° ± 1°
Maximum area scan spatial resolution: Δx_{Area}, Δy_{Area}			≤ 2 GHz: ≤15 mm 2 – 3 GHz: ≤ 12 mm	3 – 4 GHz: ≤ 12 mm 4 – 6 GHz: ≤ 10 mm
			When the x or y dimension of the test device, in the measurement plane orientation, is smaller than the above, the measurement resolution must be ≤ the corresponding x or y dimension of the test device with at least one measurement point on the test device.	
Maximum zoom scan spatial resolution: Δx_{Zoom}, Δy_{Zoom}			≤ 2 GHz: ≤ 8 mm 2 – 3 GHz: ≤ 5 mm*	3 – 4 GHz: ≤ 5 mm* 4 – 6 GHz: ≤ 4 mm*
Maximum zoom scan spatial resolution, normal to phantom surface	uniform grid: $\Delta z_{Zoom}(n)$		≤ 5 mm	3 – 4 GHz: ≤ 4 mm 4 – 5 GHz: ≤ 3 mm 5 – 6 GHz: ≤ 2 mm
	graded grid	$\Delta z_{Zoom}(1)$: between 1st two points closest to phantom surface	≤ 4 mm	3 – 4 GHz: ≤ 3 mm 4 – 5 GHz: ≤ 2.5 mm 5 – 6 GHz: ≤ 2 mm
		$\Delta z_{Zoom}(n>1)$: between subsequent points	≤ 1.5· $\Delta z_{Zoom}(n-1)$ mm	
Minimum zoom scan volume	x, y, z		≥ 30 mm	3 – 4 GHz: ≥ 28 mm 4 – 5 GHz: ≥ 25 mm 5 – 6 GHz: ≥ 22 mm
Note: δ is the penetration depth of a plane-wave at normal incidence to the tissue medium; see IEEE Std 1528-2013 for details. * When zoom scan is required and the reported SAR from the area scan based 1-g SAR estimation procedures of KDB Publication 447498 is ≤ 1.4 W/kg, ≤ 8 mm, ≤ 7 mm and ≤ 5 mm zoom scan resolution may be applied, respectively, for 2 GHz to 3 GHz, 3 GHz to 4 GHz and 4 GHz to 6 GHz.				

4.10.3 SAR measurement procedure

The measurement procedures are as follows:

4.10.3.1 Conducted power measurement

a. For WWAN power measurement, use base station simulator connection with RF cable, at maximum power in each supported wireless interface and frequency band.
b. Read the WWAN RF power level from the base station simulator.
c. For WLAN/BT power measurement, use engineering software to configure EUT WLAN/BT continuously Transmission, at maximum RF power in each supported wireless interface and frequency band.
d. Connect EUT RF port through RF cable to the power meter, and measure WLAN/BT output power.

4.10.3.2 GSM Test Configuration

SAR tests for GSM 850 and GSM 1900, a communication link is set up with a System Simulator (SS) by air link. Using CMU200 the power level is set to “5” for GSM 850, set to “0” for GSM 1900. Since the GPRS class is 12 for this EUT, it has at most 4 timeslots in uplink and at most 4 timeslots in downlink, the maximum total timeslots is 5. the EGPRS class is 12 for this EUT, it has at most 4 timeslots in uplink and at most 4 timeslots in downlink, the maximum total timeslots is 5.

SAR test reduction for GPRS and EDGE modes is determined by the source-based time-averaged output power specified for production units, including tune-up tolerance. The data mode with highest specified time-averaged output power should be tested for SAR compliance in the applicable exposure conditions. For modes with the same specified maximum output power and tolerance, the higher number time-slot configuration should be tested. GSM voice and GPRS data use GMSK, which is a constant amplitude modulation with minimal peak to average power difference within the time-slot burst. For EDGE, GMSK is used for MCS 1 – MCS 4 and 8-PSK is used for MCS 5 – MCS 9; where 8-PSK has an inherently higher peak-to-average power ratio. The GMSK and 8-PSK EDGE configurations are considered separately for SAR compliance. The GMSK EDGE configurations are grouped with GPRS and considered with respect to time-averaged maximum output power to determine compliance. The 3G SAR test reduction procedure is applied to 8-PSK EDGE with GMSK GPRS/EDGE as the primary mode.

4.10.3.3 UMTS Test Configuration

3G SAR Test Reduction Procedure
In the following procedures, the mode tested for SAR is referred to as the primary mode. The equivalent modes considered for SAR test reduction are denoted as secondary modes. Both primary and secondary modes must be in the same frequency band. When the maximum output power and tune-up tolerance specified for production units in a secondary mode is ≤ ¼ dB higher than the primary mode or when the highest reported SAR of the primary mode is scaled by the ratio of specified maximum output power and tune-up tolerance of secondary to primary mode and the adjusted SAR is ≤ 1.2 W/kg, SAR measurement is not required for the secondary mode.3 This is referred to as the 3G SAR test reduction procedure in the following SAR test guidance, where the primary mode is identified in the applicable wireless mode test procedures and the secondary mode is wireless mode being considered for SAR test reduction by that procedure. When the 3G SAR test reduction procedure is not satisfied, it is identified as “otherwise” in the applicable procedures; SAR measurement is required for the secondary mode.

Output power Verification

Maximum output power is verified on the high, middle and low channels according to procedures described in section 5.2 of 3GPP TS 34.121, using the appropriate RMC or AMR with TPC (transmit power control) set to all “1’s” for WCDMA/HSDPA or by applying the required inner loop power control procedures to maintain maximum output power while HSUPA is active. Results for all applicable physical channel configurations (DPCCH, DPDCHn and spreading codes, HSDPA, HSPA) are requied in the SAR report. All configurations that are not supported by the handset or cannot be measured due to technical or equipment limitations must be clearly identified.

Head SAR

SAR for next to the ear head exposure is measured using a 12.2 kbps RMC with TPC bits configured to all “1’s”. The 3G SAR test reduction procedure is applied to AMR configurations with 12.2 kbps RMC as the primary mode. Otherwise, SAR is measured for 12.2 kbps AMR in 3.4 kbps SRB (signaling radio bearer) using the highest reported SAR configuration in 12.2 kbps RMC for head exposure.

1) Body-Worn Accessory SAR

SAR for body-worn accessory configurations is measured using a 12.2 kbps RMC with TPC bits configured to all “1’s”. The 3G SAR test reduction procedure is applied to other spreading codes and multiple DPDCHn configurations supported by the handset with 12.2 kbps RMC as the primary mode. Otherwise, SAR is measured using an applicable RMC configuration with the corresponding spreaing code or DPDCHn, for the highest reported body-worn accessory exposure SAR configuration in 12.2 kbps

RMC. When more than 2 DPDCHn are supported by the handset, it may be necessary to configure additional DPDCHn using FTM (Factory Test Mode) or other chipset based test approaches with parameters similar to those used in 384 kbps and 768 kbps RMC.

2) Handsets with Release 5 HSDPA

The 3G SAR test reduction procedure is applied to HSDPA body-worn accessory configurations with 12.2 kbps RMC as the primary mode. Otherwise, SAR is measured for HSDPA using the HSDPA body SAR procedures in the "Release 5 HSDPA Data Devices" section of this document, for the highest reported SAR body-worn accessory exposure configuration in 12.2 kbps RMC. Handsets with both HSDPA and HSUPA are tested according to Release 6 HSPA test procedures.

HSDPA should be configured according to the UE category of a test device.The number of HSDSCH/ HS-PDSCHs, HARQ processes, minimum inter-TTI interval, transport block sizes and RV coding sequence are defined by the H-set. To maintain a consistent test configuration and stable transmission conditions, QPSK is used in the H-set for SAR testing. HS-DPCCH should be configured with a CQI feedback cycle of 4 ms with a CQI repetition factor of 2 to maintain a constant rate of active CQI slots. DPCCH and DPDCH gain factors(βc, βd), and HS-DPCCH power offset parameters (ΔACK, ΔNACK, ΔCQI) should be set according to values indicated in the Table below. The CQI value is determined by the UE category, transport block size, number of HS-PDSCHs and modulation used in the H-set

Table 2: Subtests for UMTS Release 5 HSDPA

Sub-set	β_c	β_d	β_d (SF)	β_c/β_d	β_{hs} (note 1, note 2)	CM(dB) (note 3)	MPR(dB)
1	2/15	15/15	64	2/15	4/15	0.0	0.0
2	12/15 (note 4)	15/15 (note 4)	64	12/15 (note 4)	24/15	1.0	0.0
3	15/15	8/15	64	15/8	30/15	1.5	0.5
4	15/15	4/15	64	15/4	30/15	1.5	0.5

Note1: Δ_{ACK}, Δ_{NACK} and Δ_{CQI}= 8 ⇔ $A_{hs} = \beta_{hs}/\beta_c$=30/15 ⇔ β_{hs}=30/15*β_c
Note2: CM=1 for β_c/β_d =12/15, β_{hs}/β_c=24/15.
Note3: For subtest 2 the $\beta_c\beta_d$ ratio of 12/15 for the TFC during the measurement period(TF1,TF0) is achieved by setting the signaled gain factors for the reference TFC (TFC1,TF1) to β_c=11/15 and β_d=15/15.

HSUPA Test Configuration

The 3G SAR test reduction procedure is applied to HSPA (HSUPA/HSDPA with RMC) body-worn accessory configurations with 12.2 kbps RMC as the primary mode. Otherwise, SAR is measured for HSPA using the HSPA body SAR procedures in the "Release 6 HSPA Data Devices" section of this document, for the highest reported body-worn accessory exposure SAR configuration in 12.2 kbps RMC. When VOIP is applicable for next to the ear head exposure in HSPA, the 3G SAR test reduction procedure is applied to HSPA with 12.2 kbps RMC as the primary mode; otherwise, the same HSPA configuration used for body-worn accessory measurements is tested for next to the ear head exposure.

Due to inner loop power control requirements in HSPA, a communication test set is required for output power and SAR tests. The 12.2 kbps RMC, FRC H-set 1 and E-DCH configurations for HSPA are configured according to the β values indicated in Table 2 and other applicable procedures described in the 'WCDMA Handset' and 'Release 5 HSDPA Data Devices' sections of this document

Table 3: Sub-Test 5 Setup for Release 6 HSUPA

Sub-set	β_c	β_d	β_d (SF)	β_c/β_d	β_{hs}(1)	β_{ec}	β_{ed}	β_{ed} (SF)	β_{ed} (codes)	CM (2) (dB)	MPR (dB)	AG(4) Index	E-TFCI
1	11/15(3)	15/15(3)	64	11/15(3)	22/15	209/225	1039/225	4	1	1.0	0.0	20	75
2	6/15	15/15	64	6/15	12/15	12/15	94/75	4	1	3.0	2.0	12	67
3	15/15	9/15	64	15/9	30/15	30/15	β_{ed1}:47/15 β_{ed2}:47/15	4	2	2.0	1.0	15	92
4	2/15	15/15	64	2/15	4/15	2/15	56/75	4	1	3.0	2.0	17	71
5	15/15(4)	15/15(4)	64	15/15(4)	30/15	24/15	134/15	4	1	1.0	0.0	21	81

Note 1: Δ_{ACK}, ΔNACK and Δ_{CQI} = 8 ⇔ $A_{hs} = \underline{\beta}_{hs}/\underline{\beta}_c$ = 30/15 ⇔ $\underline{\beta}_{hs}$= 30/15 *β_c.
Note 2: CM = 1 for βc/βd =12/15, $\underline{\beta}_{hs}/\underline{\beta}_c$ =24/15. For all other combinations of DPDCH, DPCCH, HS- DPCCH, E-DPDCH and E-DPCCH the MPR is based on the relative CM difference.
Note 3: For subtest 1 the βc/βd ratio of 11/15 for the TFC during the measurement period (TF1, TF0) is

achieved by setting the signaled gain factors for the reference TFC (TF1, TF1) to βc = 10/15 and βd = 15/15.
Note 4: For subtest 5 the βc/βd ratio of 15/15 for the TFC during the measurement period (TF1, TF0) is achieved by setting the signaled gain factors for the reference TFC (TF1, TF1) to βc = 14/15 and βd = 15/15.
Note 5: Testing UE using E-DPDCH Physical Layer category 1 Sub-test 3 is not required according to TS 25.306 Figure 5.1g.
Note 6: βed can not be set directly; it is set by Absolute Grant Value.

4.10.3.4 LTE Test Configuration

QPSK with 1 RB allocation
Start with the largest channel bandwidth and measure SAR for QPSK with 1 RB allocation, using the RB offset and required test channel combination with the highest maximum output power among RB offsets at the upper edge, middle and lower edge of each required test channel. When the reported SAR is ≤ 0.8 W/kg, testing of the remaining RB offset configurations and required test channels is not required for 1 RB allocation; otherwise, SAR is required for the remaining required test channels and only for the RB offset configuration with the highest output power for that channel.8 When the reported SAR of a required test channel is > 1.45 W/kg, SAR is required for all three RB offset configurations for that required test channel.

QPSK with 50% RB allocation
The procedures required for 1 RB allocation in section 4.2.1 are applied to measure the SAR for QPSK with 50% RB allocation.9

QPSK with 100% RB allocation
For QPSK with 100% RB allocation, SAR is not required when the highest maximum output power for 100 % RB allocation is less than the highest maximum output power in 50% and 1 RB allocations and the highest reported SAR for 1 RB and 50% RB allocation in sections 4.2.1 and 4.2.2 are ≤ 0.8 W/kg. Otherwise, SAR is measured for the highest output power channel; and if the reported SAR is > 1.45 W/kg, the remaining required test channels must also be tested.

4.10.3.5 WIFI Test Configuration

The SAR measurement and test reduction procedures are structured according to either the DSSS or OFDM transmission mode configurations used in each standalone frequency band and aggregated band. For devices that operate in exposure configurations that require multiple test positions, additional SAR test reduction may be applied. The maximum output power specified for production units, including tune-up tolerance, are used to determine initial SAR test requirements for the 802.11 transmission modes in a frequency band. SAR is measured using the highest measured maximum output power channel for the initial test configuration. SAR measurement and test reduction for the remaining 802.11 modes and test channels are determined according to measured or specified maximum output power and reported SAR of the initial measurements. The general test reduction and SAR measurement approaches are summarized in the following:
1. The maximum output power specified for production units are determined for all applicable 802.11 transmission modes in each standalone and aggregated frequency band. Maximum output power is measured for the highest maximum output power configuration(s) in each frequency band according to the default power measurement procedures.
2. For OFDM transmission configurations in the 2.4 GHz and 5 GHz bands, an “initial test configuration” is first determined for each standalone and aggregated frequency band according to the maximum output power and tune-up tolerance specified for production units.
a. When the same maximum power is specified for multiple transmission modes in a frequency band, the largest channel bandwidth, lowest order modulation, lowest data rate and lowest order 802.11a/g/n/ac mode is used for SAR measurement, on the highest measured output power channel in the initial test configuration, for each frequency band.
b. SAR is measured for OFDM configurations using the initial test configuration procedures. Additional frequency band specific SAR test reduction may be considered for individual frequency bands
c. Depending on the reported SAR of the highest maximum output power channel tested in the initial test configuration, SAR test reduction may apply to subsequent highest output channels in the initial test configuration to reduce the number of SAR measurements.
3. The Initial test configuration does not apply to DSSS. The 2.4 GHz band SAR test requirements and 802.11b DSSS procedures are used to establish the transmission configurations required for SAR measurement.
4. An “initial test position”is applied to further reduce the number of SAR tests for devices operating in next to the ear, UMPC mini-tablet or hotspot mode exposure configurations that require multiple test positions .

a. SAR is measured for 802.11b according to the 2.4 GHz DSSS procedure using the exposure condition established by the initial test position.
b. SAR is measured for 2.4 GHz and 5 GHz OFDM configurations using the initial test configuration. 802.11b/g/n operating modes are tested independently according to the service requirements in each frequency band. 802.11b/g/n modes are tested on the maximum average output channel.
5. The Initial test position does not apply to devices that require a fixed exposure test position. SAR is measured in a fixed exposure test position for these devices in 802.11b according to the 2.4 GHz DSSS procedure or in 2.4 GHz and 5 GHz OFDM configurations using the initial test configuration procedures .
6. The "subsequent test configuration"procedures are applied to determine if additional SAR measurements are required for the remaining OFDM transmission modes that have not been tested in the initial test configuration. SAR test exclusion is determined according to reported SAR in the initial test configuration and maximum output power specified or measured for these other OFDM configurations.

2.4 GHz and 5GHz SAR Procedures
Separate SAR procedures are applied to DSSS and OFDM configurations in the 2.4 GHz band to simplify DSSS test requirements. For 802.11b DSSS SAR measurements, DSSS SAR procedure applies to fixed exposure test position and initial test position procedure applies to multiple exposure test positions.
When SAR measurement is required for an OFDM configuration, the initial test configuration, subsequent test configuration and initial test position procedures are applied. The SAR test exclusion requirements for 802.11g/n OFDM configurations are described in section 5.2.2.
1. 802.11b DSSS SAR Test Requirements
SAR is measured for 2.4 GHz 802.11b DSSS using either a fixed test position or, when applicable, the initial test position procedure. SAR test reduction is determined according to the following:
a. When the reported SAR of the highest measured maximum output power channel (section 3.1) for the exposure configuration is ≤ 0.8 W/kg, no further SAR testing is required for 802.11b DSSS in that exposure configuration.
b. When the reported SAR is > 0.8 W/kg, SAR is required for that exposure configuration using the next highest measured output power channel. When any reported SAR is > 1.2 W/kg, SAR is required for the third channel; i.e., all channels require testing.
1. 2.4 GHz 802.11g/n OFDM SAR Test Exclusion Requirements
When SAR measurement is required for 2.4 GHz 802.11g/n OFDM configurations, the measurement and test reduction procedures for OFDM are applied (section 5.3). SAR is not required for the following 2.4 GHz OFDM conditions.
a. When KDB Publication 447498 SAR test exclusion applies to the OFDM configuration
b. When the highest reported SAR for DSSS is adjusted by the ratio of OFDM to DSSS specified maximum output power and the adjusted SAR is ≤ 1.2 W/kg.
2. SAR Test Requirements for OFDM Configurations
When SAR measurement is required for 802.11 a/g/n/ac OFDM configurations, each standalone and frequency aggregated band is considered separately for SAR test reduction. When the same transmitter and antenna(s) are used for U-NII-1 and U-NII-2A bands, additional SAR test reduction applies. When band gap channels between U-NII-2C band and 5.8 GHz U-NII-3 or §15.247 band are supported, the highest maximum output power transmission mode configuration and maximum output power channel across the bands must be used to determine SAR test reduction, according to the initial test configuration and subsequent test configuration requirements.20 In applying the initial test configuration and subsequent test configuration procedures, the 802.11 transmission configuration with the highest specified maximum output power and the channel within a test configuration with the highest measured maximum output power should be clearly distinguished to apply the procedures.
3. OFDM Transmission Mode SAR Test Configuration and Channel Selection Requirements
The initial test configuration for 2.4 GHz and 5 GHz OFDM transmission modes is determined by the 802.11 configuration with the highest maximum output power specified for production units, including tune-up tolerance, in each standalone and aggregated frequency band. SAR for the initial test configuration is measured using the highest maximum output power channel determined by the default power measurement procedures (section 4). When multiple configurations in a frequency band have the same specified maximum output power, the initial test configuration is determined according to the following steps applied sequentially.
a. The largest channel bandwidth configuration is selected among the multiple configurations with the same specified maximum output power.
b. If multiple configurations have the same specified maximum output power and largest channel bandwidth, the lowest order modulation among the largest channel bandwidth configurations is selected.
c. If multiple configurations have the same specified maximum output power, largest channel bandwidth and lowest order modulation, the lowest data rate configuration among these configurations is selected.
d. When multiple transmission modes (802.11a/g/n/ac) have the same specified maximum output power, largest channel bandwidth, lowest order modulation and lowest data rate, the lowest order 802.11

mode is selected; i.e., 802.11a is chosen over 802.11n then 802.11ac or 802.11g is chosen over 802.11n.

After an initial test configuration is determined, if multiple test channels have the same measured maximum output power, the channel chosen for SAR measurement is determined according to the following. These channel selection procedures apply to both the initial test configuration and subsequent test configuration(s), with respect to the default power measurement procedures or additional power measurements required for further SAR test reduction. The same procedures also apply to subsequent highest output power channel(s) selection.

a. Channels with measured maximum output power within ¼ dB of each other are considered to have the same maximum output.
b. When there are multiple test channels with the same measured maximum output power, the channel closest to mid-band frequency is selected for SAR measurement.
c. When there are multiple test channels with the same measured maximum output power and equal separation from mid-band frequency; for example, high and low channels or two mid-band channels, the higher frequency (number) channel is selected for SAR measurement.

Initial Test Configuration Procedures

An initial test configuration is determined for OFDM transmission modes according to the channel bandwidth, modulation and data rate combination(s) with the highest maximum output power specified for production units in each standalone and aggregated frequency band. SAR is measured using the highest measured maximum output power channel. For configurations with the same specified or measured maximum output power, additional transmission mode and test channel selection procedures are required (see section 5.3.2). SAR test reduction of subsequent highest output test channels is based on the reported SAR of the initial test configuration.

For next to the ear, hotspot mode and UMC mini-tablet exposure configurations where multiple test positions are required, the initial test position procedure is applied to minimize the number of test positions required for SAR measurement using the initial test configuration transmission mode.23 For fixed exposure conditions that do not have multiple SAR test positions, SAR is measured in the transmission mode determined by the initial test configuration. When the reported SAR of the initial test configuration is > 0.8 W/kg, SAR measurement is required for the subsequent next highest measured output power channel(s) in the initial test configuration until the reported SAR is ≤ 1.2 W/kg or all required channels are tested.

4. Subsequent Test Configuration Procedures

SAR measurement requirements for the remaining 802.11 transmission mode configurations that have not been tested in the initial test configuration are determined separately for each standalone and aggregated frequency band, in each exposure condition, according to the maximum output power specified for production units. The initial test position procedure is applied to next to the ear, UMPC mini-tablet and hotspot mode configurations. When the same maximum output power is specified for multiple transmission modes, the procedures in section 5.3.2 are applied to determine the test configuration. Additional power measurements may be required to determine if SAR measurements are required for subsequent highest output power channels in a subsequent test configuration. The subsequent test configuration and SAR measurement procedures are described in the following.

a. When SAR test exclusion provisions of KDB Publication 447498 are applicable and SAR measurement is not required for the initial test configuration, SAR is also not required for the next highest maximum output power transmission mode subsequent test configuration(s) in that frequency band or aggregated band and exposure configuration.
b. When the highest reported SAR for the initial test configuration (when applicable, include subsequent highest output channels), according to the initial test position or fixed exposure position requirements, is adjusted by the ratio of the subsequent test configuration to initial test configuration specified maximum output power and the adjusted SAR is ≤ 1.2 W/kg, SAR is not required for that subsequent test configuration.
c. The number of channels in the initial test configuration and subsequent test configuration can be different due to differences in channel bandwidth. When SAR measurement is required for a subsequent test configuration and the channel bandwidth is smaller than that in the initial test configuration, all channels in the subsequent test configuration that overlap with the larger bandwidth channel tested in the initial test configuration should be used to determine the highest maximum output power channel. This step requires additional power measurement to identify the highest maximum output power channel in the subsequent test configuration to determine SAR test reduction.

1). SAR should first be measured for the channel with highest measured output power in the subsequent test configuration.

2). SAR for subsequent highest measured maximum output power channels in the subsequent test configuration is required only when the reported SAR of the preceding higher maximum output power channel(s) in the subsequent test configuration is > 1.2 W/kg or until all required channels are tested.

a) For channels with the same measured maximum output power, SAR should be measured using the channel closest to the center frequency of the larger channel bandwidth channel in the initial test configuration.

d. SAR measurements for the remaining highest specified maximum output power OFDM transmission mode configurations that have not been tested in the initial test configuration (highest maximum output) or subsequent test configuration(s) (subsequent next highest maximum output power) is determined by applying the subsequent test configuration procedures in this section to the remaining configurations according to the following:

1) replace “subsequent test configuration” with “next subsequent test configuration” (i.e., subsequent next highest specified maximum output power configuration)
2) replace “initial test configuration” with “all tested higher output power configurations.

4.10.4 Power Reduction

The product without any power reduction.

4.10.5 Power Drift

To control the output power stability during the SAR test, DASY5 system calculates the power drift by measuring the E-field at the same location at the beginning and at the end of the measurement for each test position. These drift values can be found in Table 14.1 to Table 14.11 labeled as: (Power Drift [dB]). This ensures that the power drift during one measurement is within 5%.

This report shall not be reproduced except in full, without the written approval of Shenzhen LCS Compliance Testing Laboratory Ltd.

5. TEST CONDITIONS AND RESULTS

5.1. Conducted Power Results

According KDB 447498 D01 General RF Exposure Guidance v06 Section 4.1 2) states that "Unless it is specified differently in the published RF exposure KDB procedures, these requirements also apply to test reduction and test exclusion considerations. Time-averaged maximum conducted output power applies to SAR and, as required by § 2.1091(c), time-averaged ERP applies to MPE. When an antenna port is not available on the device to support conducted power measurement, such as FRS and certain Part 15 transmitters with built-in integral antennas, the maximum output power allowed for production units should be used to determine RF exposure test exclusion and compliance."

<GSM Conducted Power>

General Note:

1. Per KDB 447498 D01v06, the maximum output power channel is used for SAR testing and for further SAR test reduction.
2. According to October 2013TCB Workshop, for GSM / GPRS / EGPRS, the number of time slots to test for SAR should correspond to the highest frame-average maximum output power configuration, considering the possibility of e.g. 3rd party VoIP operation for head and body-worn SAR testing
3. For hotspot mode SAR testing, GPRS / EDGE should be evaluated, therefore the EUT was set in GPRS (3 Tx slots) for GSM850/GSM1900 band due to its highest frame-average power.

Conducted power measurement results for GSM850/PCS1900 <SIM1>

GSM 850		Burst Conducted power (dBm)			/	Average power (dBm)		
		Channel/Frequency(MHz)				Channel/Frequency(MHz)		
		128/ 824.2	190/ 836.6	251/ 848.8		128/824.2	190/836.6	251/848.8
GPRS (GMSK)	1TX slot	32.11	32.22	32.08	-9.03dB	23.08	23.19	23.05
	2TX slot	30.39	30.53	30.41	-6.02dB	**24.37**	**24.51**	**24.39**
	3TX slot	28.55	28.78	28.37	-4.26dB	24.29	24.52	24.11
	4TX slot	26.34	26.48	26.36	-3.01dB	23.33	23.47	23.35
EGPRS (8PSK)	1TX slot	25.44	25.39	25.11	-9.03dB	16.41	16.36	16.08
	2TX slot	24.33	24.29	24.17	-6.02dB	18.31	18.27	18.15
	3TX slot	23.28	23.11	23.07	-4.26dB	19.02	18.85	18.81
	4TX slot	22.39	22.21	22.11	-3.01dB	19.38	19.20	19.10
GSM 1900		Burst Conducted power (dBm)			/	Average power (dBm)		
		Channel/Frequency(MHz)				Channel/Frequency(MHz)		
		512/ 1850.2	661/ 1880	810/ 1909.8		512/ 1850.2	661/ 1880	810/ 1909.8
GPRS (GMSK)	1TX slot	30.19	30.37	30.25	-9.03dB	21.16	21.34	21.22
	2TX slot	28.71	28.96	28.94	-6.02dB	22.69	22.94	22.92
	3TX slot	27.76	27.94	27.82	-4.26dB	**23.50**	**23.68**	**23.56**
	4TX slot	25.57	25.89	25.36	-3.01dB	22.56	22.88	22.35
EGPRS (8PSK)	1TX slot	24.88	24.97	24.81	-9.03dB	15.85	15.94	15.78
	2TX slot	23.66	23.82	23.78	-6.02dB	17.64	17.80	17.76
	3TX slot	21.56	21.67	21.59	-4.26dB	17.30	17.41	17.33
	4TX slot	20.39	20.48	20.43	-3.01dB	17.38	17.47	17.42

This report shall not be reproduced except in full, without the written approval of Shenzhen LCS Compliance Testing Laboratory Ltd.

Conducted power measurement results for GSM850/PCS1900 <SIM2>

GSM 850		Burst Conducted power (dBm)			/	Average power (dBm)		
		Channel/Frequency(MHz)				Channel/Frequency(MHz)		
		128/ 824.2	190/ 836.6	251/ 848.8		128/824.2	190/836.6	251/848.8
GPRS (GMSK)	1TX slot	32.07	32.17	32.08	-9.03dB	23.04	23.14	23.05
	2TX slot	30.35	30.49	30.34	-6.02dB	**24.33**	**24.47**	**24.32**
	3TX slot	28.55	28.77	28.30	-4.26dB	24.29	24.51	24.04
	4TX slot	26.31	26.37	26.27	-3.01dB	23.30	23.36	23.26
EGPRS (8PSK)	1TX slot	25.42	25.35	25.04	-9.03dB	16.39	16.32	16.01
	2TX slot	24.27	24.29	24.12	-6.02dB	18.25	18.27	18.10
	3TX slot	23.22	23.04	23.01	-4.26dB	18.96	18.78	18.75
	4TX slot	22.30	22.17	22.04	-3.01dB	19.29	19.16	19.03
GSM 1900		Burst Conducted power (dBm)			/	Average power (dBm)		
		Channel/Frequency(MHz)				Channel/Frequency(MHz)		
		512/ 1850.2	661/ 1880	810/ 1909.8		512/ 1850.2	661/ 1880	810/ 1909.8
GPRS (GMSK)	1TX slot	30.11	30.32	30.24	-9.03dB	21.08	21.29	21.21
	2TX slot	28.66	28.91	28.88	-6.02dB	22.64	22.89	22.86
	3TX slot	27.72	27.90	27.79	-4.26dB	**23.46**	**23.64**	**23.53**
	4TX slot	25.51	25.82	25.36	-3.01dB	22.50	22.81	22.35
EGPRS (8PSK)	1TX slot	24.82	24.97	24.74	-9.03dB	15.79	15.94	15.71
	2TX slot	23.59	23.80	23.71	-6.02dB	17.57	17.78	17.69
	3TX slot	21.47	21.59	21.52	-4.26dB	17.21	17.33	17.26
	4TX slot	20.32	20.42	20.43	-3.01dB	17.31	17.41	17.42

Notes:

1. Division Factors

To average the power, the division factor is as follows:

1TX-slot = 1 transmit time slot out of 8 time slots=> conducted power divided by (8/1) => -9.00dB

2TX-slots = 2 transmit time slots out of 8 time slots=> conducted power divided by (8/2) => -6.00dB

3TX-slots = 3 transmit time slots out of 8 time slots=> conducted power divided by (8/3) => -4.26dB

4TX-slots = 4 transmit time slots out of 8 time slots=> conducted power divided by (8/4) => -3.00dB

2. According to the conducted power as above, the GPRS measurements are performed with 3Txslot for GPRS850 and 3Txslot GPRS1900.

<UMTS Conducted Power>

The following tests were conducted according to the test requirements outlines in 3GPP TS 34.121 specification. A summary of these settings are illustrated below:

HSDPA Setup Configuration:

a. The EUT was connected to Base Station E5515C referred to the Setup Configuration.
b. The RF path losses were compensated into the measurements.
c. A call was established between EUT and Base Station with following setting:
   i. Set Gain Factors (β_c and β_d) and parameters were set according to each
   ii. Specific sub-test in the following table, C10.1.4, quoted from the TS 34.121
   iii. Set RMC 12.2Kbps + HSDPA mode.
   iv. Set Cell Power = -86 dBm
   v. Set HS-DSCH Configuration Type to FRC (H-set 1, QPSK)
   vi. Select HSDPA Uplink Parameters
   vii. Set Delta ACK, Delta NACK and Delta CQI = 8
   viii. Set Ack-Nack Repetition Factor to 3
   ix. Set CQI Feedback Cycle (k) to 4 ms
   x. Set CQI Repetition Factor to 2
   xi. Power Ctrl Mode = All Up bits
d. The transmitted maximum output power was recorded.

Table C.10.1.4: β values for transmitter characteristics tests with HS-DPCCH

Sub-test	β_c	β_d	β_d (SF)	β_c/β_d	β_{HS} (Note1, Note 2)	CM (dB) (Note 3)	MPR (dB) (Note 3)
1	2/15	15/15	64	2/15	4/15	0.0	0.0
2	12/15 (Note 4)	15/15 (Note 4)	64	12/15 (Note 4)	24/15	1.0	0.0
3	15/15	8/15	64	15/8	30/15	1.5	0.5
4	15/15	4/15	64	15/4	30/15	1.5	0.5

Note 1: Δ_{ACK}, Δ_{NACK} and Δ_{CQI} = 30/15 with β_{hs} = 30/15 * β_c .

Note 2: For the HS-DPCCH power mask requirement test in clause 5.2C, 5.7A, and the Error Vector Magnitude (EVM) with HS-DPCCH test in clause 5.13.1A, and HSDPA EVM with phase discontinuity in clause 5.13.1AA, Δ_{ACK} and Δ_{NACK} = 30/15 with β_{hs} = 30/15 * β_c , and Δ_{CQI} = 24/15 with β_{hs} = 24/15 * β_c .

Note 3: CM = 1 for β_c/β_d =12/15, β_{hs}/β_c=24/15. For all other combinations of DPDCH, DPCCH and HS-DPCCH the MPR is based on the relative CM difference. This is applicable for only UEs that support HSDPA in release 6 and later releases.

Note 4: For subtest 2 the β_c/β_d ratio of 12/15 for the TFC during the measurement period (TF1, TF0) is achieved by setting the signalled gain factors for the reference TFC (TF1, TF1) to β_c = 11/15 and β_d = 15/15.

Setup Configuration

HSUPA Setup Configuration:

a. The EUT was connected to Base Station R&S CMU200 referred to the Setup Configuration.
b. The RF path losses were compensated into the measurements.
c. A call was established between EUT and Base Station with following setting * :
   i. Call Configs = 5.2B, 5.9B, 5.10B, and 5.13.2B with QPSK
   ii. Set the Gain Factors (β_c and β_d) and parameters (AG Index) were set according to each specific sub-test in the following table, C11.1.3, quoted from the TS 34.121
   iii. Set Cell Power = -86 dBm
   iv. Set Channel Type = 12.2k + HSPA
   v. Set UE Target Power
   vi. Power Ctrl Mode= Alternating bits
   vii. Set and observe the E-TFCI
   viii. Confirm that E-TFCI is equal to the target E-TFCI of 75 for sub-test 1, and other subtest's E-TFCI
d. The transmitted maximum output power was recorded.

Table C.11.1.3: β values for transmitter characteristics tests with HS-DPCCH and E-DCH

Sub-test	β_c	β_d	β_d (SF)	β_c/β_d	β_{HS} (Note1)	β_{ec}	β_{ed} (Note 5) (Note 6)	β_{ed} (SF)	β_{ed} (Codes)	CM (dB) (Note 2)	MPR (dB) (Note 2)	AG Index (Note 6)	E-TFCI
1	11/15 (Note 3)	15/15 (Note 3)	64	11/15 (Note 3)	22/15	209/225	1309/225	4	1	1.0	0.0	20	75
2	6/15	15/15	64	6/15	12/15	12/15	94/75	4	1	3.0	2.0	12	67
3	15/15	9/15	64	15/9	30/15	30/15	β_{ed}1: 47/15 β_{ed}2: 47/15	4 4	2	2.0	1.0	15	92
4	2/15	15/15	64	2/15	4/15	2/15	56/75	4	1	3.0	2.0	17	71
5	15/15 (Note 4)	15/15 (Note 4)	64	15/15 (Note 4)	30/15	24/15	134/15	4	1	1.0	0.0	21	81

Note 1: Δ_{ACK}, Δ_{NACK} and Δ_{CQI} = 30/15 with β_{hs} = 30/15 * β_c .

Note 2: CM = 1 for β_c/β_d =12/15, β_{hs}/β_c=24/15. For all other combinations of DPDCH, DPCCH, HS- DPCCH, E-DPDCH and E-DPCCH the MPR is based on the relative CM difference.

Note 3: For subtest 1 the β_c/β_d ratio of 11/15 for the TFC during the measurement period (TF1, TF0) is achieved by setting the signalled gain factors for the reference TFC (TF1, TF1) to β_c = 10/15 and β_d = 15/15.

Note 4: For subtest 5 the β_c/β_d ratio of 15/15 for the TFC during the measurement period (TF1, TF0) is achieved by setting the signalled gain factors for the reference TFC (TF1, TF1) to β_c = 14/15 and β_d = 15/15.

Note 5: In case of testing by UE using E-DPDCH Physical Layer category 1, Sub-test 3 is omitted according to TS25.306 Table 5.1g.

Note 6: β_{ed} can not be set directly, it is set by Absolute Grant Value.

General Note

1. Per KDB 941225 D01, RMC 12.2kbps setting is used to evaluate SAR. If AMR 12.2kbps power is < 0.25dB higher than RMC 12.2kbps, SAR tests with AMR 12.2kbps can be excluded.
2. By design, AMR and HSDPA/HSUPA RF power will not be larger than RMC 12.2kbps, detailed information is included in Tune-up Procure exhibit.
3. It is expected by the manufacturer that MPR for some HSDPA/HSUPA subtests may differ from the specification of 3GPP, according to the chipset implementation in this model. The implementation and expected deviation are detailed in tune-up procedure exhibit.

Conducted Power Measurement Results(WCDMA Band II/V)

Item	Band	FDD Band V result (dBm)			FDD Band II result (dBm)		
		Test Channel			Test Channel		
		4132/826.4	4183/836.6	4233/846.6	9262/1852.4	9400/1880	9538/1907.6
RMC	12.2kbps	23.26	23.35	23.12	23.51	23.66	23.32
	64kbps	23.21	23.29	23.04	23.44	23.60	23.19
	144kbps	23.15	23.17	23.00	23.32	23.43	23.11
	384kbps	23.12	23.14	22.91	23.16	23.22	23.02
HSDPA	Subtest 1	21.45	21.31	21.14	21.55	21.44	21.39
	Subtest 2	21.26	21.22	21.13	21.49	21.41	21.34
	Subtest 3	21.24	21.29	21.02	21.44	21.38	21.32
	Subtest 4	21.21	21.33	21.00	21.41	21.34	21.31
HSUPA	Subtest 1	22.22	22.24	22.08	22.53	22.44	22.27
	Subtest 2	22.19	22.20	22.09	22.51	22.41	22.23
	Subtest 3	22.15	22.17	22.01	22.45	22.38	22.26
	Subtest 4	22.21	22.23	21.97	22.47	22.33	22.25
	Subtest 5	22.18	22.18	21.93	22.41	22.32	22.21

Note: When the maximum output power and tune-up tolerance specified for production units in a secondary mode is ≤1/2dB higher than the primary mode (RMC12.2kbps) or when the highest reported SAR of the primary mode is scaled by the ratio of specified maximum output power and tune-up tolerance of secondary to primary mode and the adjusted SAR is ≤ 1.2 W/kg, SAR measurement is not required for the secondary mode.

This report shall not be reproduced except in full, without the written approval of Shenzhen LCS Compliance Testing Laboratory Ltd.

LTE Band 2

BW (MHz)	Frequency (MHz)	RB Configuration		Average Power [dBm]	
		Size	Offset	QPSK	16QAM
1.4	1850.7	1	0	24.59	23.39
		1	3	24.60	23.55
		1	5	24.82	23.52
		3	0	23.83	22.83
		3	2	23.83	22.89
		3	3	23.77	22.88
		6	0	23.73	22.61
	1880.0	1	0	24.71	23.27
		1	3	24.58	23.38
		1	5	24.87	23.24
		3	0	23.82	22.52
		3	2	23.88	22.89
		3	3	23.80	22.85
		6	0	23.84	22.81
	1909.3	1	0	24.82	23.22
		1	3	24.89	23.38
		1	5	24.97	23.28
		3	0	23.90	22.87
		3	2	23.91	22.94
		3	3	23.91	22.96
		6	0	23.88	22.17
3	1851.5	1	0	24.66	23.77
		1	7	24.65	23.92
		1	14	24.71	23.85
		8	0	23.90	22.98
		8	4	23.85	22.87
		8	7	23.93	22.88
		15	0	23.79	22.77
	1880.0	1	0	24.76	23.32
		1	7	24.75	23.45
		1	14	24.77	23.51
		8	0	23.85	22.84
		8	4	23.83	22.83
		8	7	23.81	22.90
		15	0	23.80	22.67
	1908.5	1	0	24.94	23.83
		1	7	24.90	23.91
		1	14	24.95	23.97
		8	0	23.86	22.92
		8	4	23.92	22.99
		8	7	23.93	22.84
		15	0	23.93	22.81
5	1852.5	1	0	24.73	23.95
		1	12	24.93	23.96
		1	24	24.94	23.95
		12	0	23.82	22.85
		12	6	23.77	22.82
		12	13	23.84	22.73
		25	0	23.79	22.71
	1880.0	1	0	24.83	23.58
		1	12	24.85	23.52
		1	24	24.94	23.75
		12	0	23.83	22.80
		12	6	23.81	22.89
		12	13	23.91	22.82
		25	0	23.87	22.77
	1907.5	1	0	24.86	23.56
		1	12	24.92	23.93
		1	24	24.91	23.91
		12	0	23.82	22.80
		12	6	23.92	22.84
		12	13	23.91	22.86
		25	0	23.88	22.67
10	1855.0	1	0	24.87	23.95

		1	24	24.61	23.92
		1	49	24.83	23.93
		25	0	23.97	22.80
		25	12	23.81	22.65
		25	25	23.87	22.65
		50	0	23.91	22.57
	1880.0	1	0	24.86	23.97
		1	24	24.78	23.91
		1	49	24.93	23.97
		25	0	23.83	22.84
		25	12	23.89	22.82
		25	25	23.98	22.93
		50	0	23.87	22.73
	1905.0	1	0	24.77	23.98
		1	24	24.41	23.81
		1	49	24.97	23.92
		25	0	23.86	22.79
		25	12	23.91	22.78
		25	25	23.94	22.92
		50	0	23.83	22.81
15	1857.5	1	0	24.93	23.83
		1	37	24.66	23.65
		1	74	24.68	23.86
		37	0	23.93	22.90
		37	18	23.87	22.93
		37	38	23.89	22.95
		75	0	23.79	22.85
	1880.0	1	0	24.93	23.98
		1	37	24.96	23.96
		1	74	24.95	23.98
		37	0	23.90	22.69
		37	18	23.98	22.78
		37	38	23.93	22.88
		75	0	23.91	22.69
	1902.5	1	0	24.95	23.91
		1	37	24.87	23.72
		1	74	25.96	23.91
		37	0	23.92	22.90
		37	18	23.90	22.92
		37	38	23.93	22.90
		75	0	23.76	22.81
20	1860.0	1	0	24.90	23.98
		1	49	24.99	23.88
		1	99	24.86	23.83
		50	0	23.92	22.92
		50	25	23.96	22.74
		50	50	23.95	22.95
		100	0	23.93	22.92
	1880.0	1	0	24.47	23.66
		1	49	24.79	23.98
		1	99	24.82	23.78
		50	0	23.95	22.92
		50	25	23.93	22.90
		50	50	23.92	22.95
		100	0	23.85	22.92
	1900.0	1	0	24.97	23.63
		1	49	24.88	23.48
		1	99	24.94	23.93
		50	0	23.79	22.98
		50	25	23.94	21.90
		50	50	23.91	22.96
		100	0	23.90	22.92

This report shall not be reproduced except in full, without the written approval of Shenzhen LCS Compliance Testing Laboratory Ltd.

LTE Band 5

BW (MHz)	Frequency (MHz)	RB Configuration		Average Power [dBm]	
		Size	Offset	QPSK	16QAM
1.4	824.70	1	0	24.83	23.96
		1	3	24.87	23.98
		1	5	24.89	23.96
		3	0	23.90	22.83
		3	2	23.90	22.95
		3	3	23.92	21.95
		6	0	23.81	22.71
	836.50	1	0	24.92	23.77
		1	3	24.91	23.90
		1	5	24.93	23.82
		3	0	23.95	23.30
		3	2	23.91	22.90
		3	3	23.95	22.99
		6	0	23.77	22.92
	848.30	1	0	24.92	23.95
		1	3	24.93	23.97
		1	5	24.84	23.95
		3	0	23.95	22.92
		3	2	23.97	22.89
		3	3	23.99	22.96
		6	0	23.84	22.87
3	825.50	1	0	24.88	23.98
		1	7	24.96	23.81
		1	14	24.98	23.91
		8	0	23.85	22.87
		8	4	23.99	22.86
		8	7	23.98	22.98
		15	0	23.85	22.81
	836.50	1	0	24.90	23.88
		1	7	24.95	23.83
		1	14	24.90	23.98
		8	0	23.87	22.91
		8	4	23.94	22.89
		8	7	23.95	22.91
		15	0	23.81	21.83
	847.50	1	0	24.90	23.74
		1	7	24.98	23.58
		1	14	24.80	23.97
		8	0	23.96	22.96
		8	4	23.83	22.92
		8	7	23.93	22.87
		15	0	23.80	22.81
5	826.50	1	0	24.92	23.98
		1	12	24.95	23.97
		1	24	24.82	23.86
		12	0	23.91	22.99
		12	6	23.96	21.85
		12	13	23.88	22.96
		25	0	23.74	22.80
	836.50	1	0	24.92	23.98
		1	12	24.90	23.81
		1	24	24.97	23.98
		12	0	23.85	22.96
		12	6	23.93	22.95
		12	13	23.90	22.87
		25	0	23.82	22.79
	846.50	1	0	24.97	23.91
		1	12	24.97	23.88
		1	24	24.82	23.93
		12	0	23.92	22.96
		12	6	23.95	22.88
		12	13	23.95	22.91
		25	0	23.88	21.71
10	829.00	1	0	24.89	23.85

		1	24	24.92	23.96
		1	49	24.99	23.99
		25	0	23.82	22.90
		25	12	23.95	22.94
		25	25	23.90	22.95
		50	0	23.83	22.80
	836.50	1	0	24.89	23.98
		1	24	24.99	23.91
		1	49	24.97	23.88
		25	0	23.90	22.96
		25	12	23.82	22.97
		25	25	23.95	22.97
		50	0	23.86	22.96
	844.00	1	0	24.93	23.99
		1	24	24.93	23.89
		1	49	24.89	23.91
		25	0	23.97	22.98
		25	12	23.93	22.99
		25	25	23.96	22.93
		50	0	23.74	22.84

This report shall not be reproduced except in full, without the written approval of Shenzhen LCS Compliance Testing Laboratory Ltd.

LTE Band 7

BW (MHz)	Frequency (MHz)	RB Configuration		Average Power [dBm]	
		Size	Offset	QPSK	16QAM
5	2502.50	1	0	23.45	22.54
		1	12	23.87	22.68
		1	24	23.81	22.94
		12	0	22.65	21.78
		12	6	22.80	21.85
		12	13	22.83	21.96
		25	0	22.70	21.94
	2535.00	1	0	24.63	23.95
		1	12	24.46	23.92
		1	24	24.72	23.94
		12	0	23.89	22.81
		12	6	23.91	22.94
		12	13	23.94	22.90
		25	0	23.93	22.78
	2567.50	1	0	24.90	23.37
		1	12	24.99	23.99
		1	24	24.12	23.83
		12	0	23.91	22.90
		12	6	23.95	22.92
		12	13	23.81	22.89
		25	0	23.76	22.79
10	2505.00	1	0	23.50	22.95
		1	24	23.96	22.88
		1	49	23.83	22.96
		25	0	22.83	21.93
		25	12	22.91	21.91
		25	25	22.93	21.85
		50	0	22.82	21.72
	2535.00	1	0	24.36	23.84
		1	24	24.23	23.93
		1	49	24.55	23.97
		25	0	23.98	22.83
		25	12	23.92	22.90
		25	25	23.97	22.97
		50	0	23.90	22.85
	2565.00	1	0	24.95	23.90
		1	24	24.72	23.84
		1	49	24.86	23.93
		25	0	23.91	22.92
		25	12	23.97	22.84
		25	25	23.99	22.93
		50	0	23.88	22.80
15	2507.50	1	0	23.97	22.90
		1	37	23.99	22.95
		1	74	23.84	21.87
		37	0	22.97	21.92
		37	18	22.94	21.93
		37	38	22.88	21.83
		75	0	22.92	21.83
	2535.00	1	0	24.04	23.75
		1	37	24.08	23.80
		1	74	24.39	23.92
		37	0	23.96	22.94
		37	18	23.98	22.93
		37	38	23.94	22.95
		75	0	23.91	22.88
	2562.50	1	0	24.92	23.98
		1	37	24.62	23.89
		1	74	24.68	23.83
		37	0	23.94	22.81
		37	18	23.90	22.99
		37	38	23.88	22.97
		75	0	23.77	22.83
20	2510.00	1	0	23.17	22.93

		1	49	23.86	22.90
		1	99	23.90	22.78
		50	0	22.84	21.94
		50	25	22.87	21.95
		50	50	22.89	21.97
		100	0	22.80	21.84
	2535.00	1	0	24.48	23.17
		1	49	24.95	23.65
		1	99	24.89	23.60
		50	0	23.95	22.80
		50	25	23.92	22.89
		50	50	23.96	22.95
		100	0	23.84	22.84
	2560.00	1	0	24.61	23.94
		1	49	24.62	23.88
		1	99	24.37	23.90
		50	0	23.88	22.94
		50	25	23.90	22.80
		50	50	23.87	22.92
		100	0	23.76	22.78

This report shall not be reproduced except in full, without the written approval of Shenzhen LCS Compliance Testing Laboratory Ltd.

LTE Band 12

BW (MHz)	Frequency (MHz)	RB Configuration		Average Power [dBm]	
		Size	Offset	QPSK	16QAM
1.4	699.70	1	0	25.38	24.76
		1	3	25.25	24.51
		1	5	25.37	24.48
		3	0	24.94	23.86
		3	2	24.97	23.83
		3	3	24.85	23.77
		6	0	24.71	23.47
	707.50	1	0	25.33	24.81
		1	3	25.26	24.97
		1	5	25.41	24.94
		3	0	24.95	23.91
		3	2	24.87	23.81
		3	3	24.92	23.75
		6	0	24.79	23.64
	715.30	1	0	25.24	24.75
		1	3	25.20	24.78
		1	5	25.54	24.64
		3	0	24.92	23.56
		3	2	24.88	23.63
		3	3	24.61	23.72
		6	0	24.76	23.51
3	700.50	1	0	25.41	24.66
		1	7	25.26	24.43
		1	14	25.15	24.20
		8	0	24.38	23.56
		8	4	24.40	23.28
		8	7	24.34	23.21
		15	0	24.25	23.39
	707.50	1	0	25.09	24.21
		1	7	25.20	24.67
		1	14	25.19	24.77
		8	0	24.23	23.68
		8	4	24.43	23.14
		8	7	24.31	23.27
		15	0	24.32	23.23
	714.50	1	0	24.94	23.89
		1	7	24.37	23.86
		1	14	24.60	23.93
		8	0	23.96	22.20
		8	4	23.95	22.99
		8	7	23.85	22.86
		15	0	23.76	22.66
5	701.50	1	0	25.56	24.44
		1	12	25.26	23.95
		1	24	25.39	24.13
		12	0	24.42	23.41
		12	6	24.35	23.31
		12	13	24.11	23.20
		25	0	24.33	23.14
	707.50	1	0	25.00	23.86
		1	12	25.31	24.26
		1	24	25.33	24.51
		12	0	24.23	23.31
		12	6	24.30	23.37
		12	13	24.37	23.41
		25	0	24.18	23.32
	713.50	1	0	25.15	24.68
		1	12	25.06	24.79
		1	24	24.74	24.61
		12	0	24.20	23.81
		12	6	24.07	23.67
		12	13	24.08	23.87
		25	0	24.15	23.41
10	704.00	1	0	25.24	24.84

		1	24	25.03	24.90
		1	49	25.40	24.96
		25	0	24.30	23.36
		25	12	24.23	23.08
		25	25	24.22	23.27
		50	0	24.21	23.13
	707.50	1	0	25.04	24.54
		1	24	25.04	24.69
		1	49	25.08	24.66
		25	0	24.23	23.09
		25	12	24.19	23.23
		25	25	24.26	23.21
		50	0	24.14	23.20
	711.00	1	0	25.42	24.94
		1	24	25.29	24.91
		1	49	24.66	24.14
		25	0	24.36	23.25
		25	12	24.23	23.20
		25	25	24.05	23.08
		50	0	24.13	23.16

<WLAN 2.4GHz Conducted Power>

Mode	Channel	Frequency (MHz)	Data rate (Mbps)	Average Output Power (dBm)
IEEE 802.11b	1	2412	1	16.11
			2	16.03
			5.5	15.94
			11	15.88
	6	2437	1	16.28
			2	16.21
			5.5	16.13
			11	16.02
	11	2462	1	16.23
			2	16.16
			5.5	16.11
			11	15.97
IEEE 802.11g	1	2412	6	15.22
			9	15.19
			12	15.18
			18	15.13
			24	15.10
			36	15.09
			48	15.02
			54	15.02
	6	2437	6	15.39
			9	15.35
			12	15.35
			18	15.28
			24	15.25
			36	15.25
			48	15.21
			54	15.20
	11	2462	6	15.57
			9	15.56
			12	15.52
			18	15.47
			24	15.45
			36	15.40
			48	15.36
			54	15.35
IEEE 802.11n HT20	1	2412	MCS0	15.18
			MCS1	15.15
			MCS2	15.15

			MCS3	15.11
			MCS4	15.04
			MCS5	15.04
			MCS6	15.02
			MCS7	15.01
	6	2437	MCS0	15.29
			MCS1	15.29
			MCS2	15.22
			MCS3	15.20
			MCS4	15.17
			MCS5	15.17
			MCS6	15.12
			MCS7	15.11
	11	2462	MCS0	15.04
			MCS1	14.98
			MCS2	14.97
			MCS3	14.92
			MCS4	14.83
			MCS5	14.80
			MCS6	14.76
			MCS7	14.76

Note: SAR is not required for the following 2.4 GHz OFDM conditions as the highest reported SAR for DSSS is adjusted by the ratio of OFDM to DSSS specified maximum output power and the adjusted SAR is ≤ 1.2 W/kg.

<Bluetooth Conducted Power>

Mode	Channel	Frequency (MHz)	Conducted Average Power (dBm)
BLE-GFSK	0	2402	0.56
	19	2440	0.94
	39	2480	0.27
GFSK	0	2402	2.34
	39	2441	2.01
	78	2480	1.88
π/4DQPSK	0	2402	0.89
	39	2441	0.84
	78	2480	0.55
8DPSK	0	2402	1.02
	39	2441	0.99
	78	2480	0.86

5.2. Manufacturing tolerance

GSM <SIM1>

GSM 850 GPRS (GMSK) (Burst Average Power)				
Channel		128	190	251
1 Txslot	Target (dBm)	32.0	32.0	32.0
	Tolerance ±(dB)	1.0	1.0	1.0
2 Txslot	Target (dBm)	30.0	30.0	30.0
	Tolerance ±(dB)	1.0	1.0	1.0
3 Txslot	Target (dBm)	28.0	28.0	28.0
	Tolerance ±(dB)	1.0	1.0	1.0
4 Txslot	Target (dBm)	26.0	26.0	26.0
	Tolerance ±(dB)	1.0	1.0	1.0
GSM 850 EDGE (8PSK) (Burst Average Power)				
Channel		128	190	251
1 Txslot	Target (dBm)	25.0	25.0	25.0
	Tolerance ±(dB)	1.0	1.0	1.0
2 Txslot	Target (dBm)	24.0	24.0	24.0
	Tolerance ±(dB)	1.0	1.0	1.0

3 Txslot	Target (dBm)	23.0	23.0	23.0
	Tolerance ±(dB)	1.0	1.0	1.0
4 Txslot	Target (dBm)	22.0	22.0	22.0
	Tolerance ±(dB)	1.0	1.0	1.0
GSM 1900 GPRS (GMSK) (Burst Average Power)				
Channel		512	661	810
1 Txslot	Target (dBm)	30.0	30.0	30.0
	Tolerance ±(dB)	1.0	1.0	1.0
2 Txslot	Target (dBm)	28.0	28.0	28.0
	Tolerance ±(dB)	1.0	1.0	1.0
3 Txslot	Target (dBm)	27.0	27.0	27.0
	Tolerance ±(dB)	1.0	1.0	1.0
4 Txslot	Target (dBm)	25.0	25.0	25.0
	Tolerance ±(dB)	1.0	1.0	1.0
GSM 1900 EDGE (8PSK) (Burst Average Power)				
Channel		512	661	810
1 Txslot	Target (dBm)	24.0	24.0	24.0
	Tolerance ±(dB)	1.0	1.0	1.0
2 Txslot	Target (dBm)	23.0	23.0	23.0
	Tolerance ±(dB)	1.0	1.0	1.0
3 Txslot	Target (dBm)	21.0	21.0	21.0
	Tolerance ±(dB)	1.0	1.0	1.0
4 Txslot	Target (dBm)	20.0	20.0	20.0
	Tolerance ±(dB)	1.0	1.0	1.0

GSM <SIM2>

GSM 850 GPRS (GMSK) (Burst Average Power)				
Channel		128	190	251
1 Txslot	Target (dBm)	32.0	32.0	32.0
	Tolerance ±(dB)	1.0	1.0	1.0
2 Txslot	Target (dBm)	30.0	30.0	30.0
	Tolerance ±(dB)	1.0	1.0	1.0
3 Txslot	Target (dBm)	28.0	28.0	28.0
	Tolerance ±(dB)	1.0	1.0	1.0
4 Txslot	Target (dBm)	26.0	26.0	26.0
	Tolerance ±(dB)	1.0	1.0	1.0
GSM 850 EDGE (8PSK) (Burst Average Power)				
Channel		128	190	251
1 Txslot	Target (dBm)	25.0	25.0	25.0
	Tolerance ±(dB)	1.0	1.0	1.0
2 Txslot	Target (dBm)	24.0	24.0	24.0
	Tolerance ±(dB)	1.0	1.0	1.0
3 Txslot	Target (dBm)	23.0	23.0	23.0
	Tolerance ±(dB)	1.0	1.0	1.0
4 Txslot	Target (dBm)	22.0	22.0	22.0
	Tolerance ±(dB)	1.0	1.0	1.0
GSM 1900 GPRS (GMSK) (Burst Average Power)				
Channel		512	661	810
1 Txslot	Target (dBm)	30.0	30.0	30.0
	Tolerance ±(dB)	1.0	1.0	1.0
2 Txslot	Target (dBm)	28.0	28.0	28.0
	Tolerance ±(dB)	1.0	1.0	1.0
3 Txslot	Target (dBm)	27.0	27.0	27.0
	Tolerance ±(dB)	1.0	1.0	1.0
4 Txslot	Target (dBm)	25.0	25.0	25.0
	Tolerance ±(dB)	1.0	1.0	1.0
GSM 1900 EDGE (8PSK) (Burst Average Power)				
Channel		512	661	810
1 Txslot	Target (dBm)	24.0	24.0	24.0
	Tolerance ±(dB)	1.0	1.0	1.0
2 Txslot	Target (dBm)	23.0	23.0	23.0
	Tolerance ±(dB)	1.0	1.0	1.0

3 Txslot	Target (dBm)	21.0	21.0	21.0
	Tolerance ±(dB)	1.0	1.0	1.0
4 Txslot	Target (dBm)	20.0	20.0	20.0
	Tolerance ±(dB)	1.0	1.0	1.0

UMTS Band V <SIM1>

UMTS Band V			
Channel	Channel 4132	Channel 4183	Channel 4233
Target (dBm)	23.0	23.0	23.0
Tolerance ±(dB)	1.0	1.0	1.0
UMTS Band V HSDPA(sub-test 1)			
Channel	Channel 4132	Channel 4183	Channel 4233
Target (dBm)	21.0	21.0	21.0
Tolerance ±(dB)	1.0	1.0	1.0
UMTS Band V HSDPA(sub-test 2)			
Channel	Channel 4132	Channel 4183	Channel 4233
Target (dBm)	21.0	21.0	21.0
Tolerance ±(dB)	1.0	1.0	1.0
UMTS Band V HSDPA(sub-test 3)			
Channel	Channel 4132	Channel 4183	Channel 4233
Target (dBm)	21.0	21.0	21.0
Tolerance ±(dB)	1.0	1.0	1.0
UMTS Band V HSDPA(sub-test 4)			
Channel	Channel 4132	Channel 4183	Channel 4233
Target (dBm)	21.0	21.0	21.0
Tolerance ±(dB)	1.0	1.0	1.0
UMTS Band V HSUPA(sub-test 1)			
Channel	Channel 4132	Channel 4183	Channel 4233
Target (dBm)	22.0	22.0	22.0
Tolerance ±(dB)	1.0	1.0	1.0
UMTS Band V HSUPA(sub-test 2)			
Channel	Channel 4132	Channel 4183	Channel 4233
Target (dBm)	22.0	22.0	22.0
Tolerance ±(dB)	1.0	1.0	1.0
UMTS Band V HSUPA(sub-test 3)			
Channel	Channel 4132	Channel 4183	Channel 4233
Target (dBm)	22.0	22.0	22.0
Tolerance ±(dB)	1.0	1.0	1.0
UMTS Band V HSUPA(sub-test 4)			
Channel	Channel 4132	Channel 4183	Channel 4233
Target (dBm)	22.0	22.0	22.0
Tolerance ±(dB)	1.0	1.0	1.0
UMTS Band V HSUPA(sub-test 5)			
Channel	Channel 4132	Channel 4183	Channel 4233
Target (dBm)	22.0	22.0	22.0
Tolerance ±(dB)	1.0	1.0	1.0

UMTS Band II <SIM1>

UMTS Band II			
Channel	Channel 9262	Channel 9400	Channel 9538
Target (dBm)	23.0	23.0	23.0
Tolerance ±(dB)	1.0	1.0	1.0
UMTS Band II HSDPA(sub-test 1)			
Channel	Channel 9262	Channel 9400	Channel 9538
Target (dBm)	21.0	21.0	21.0
Tolerance ±(dB)	1.0	1.0	1.0
UMTS Band II HSDPA(sub-test 2)			
Channel	Channel 9262	Channel 9400	Channel 9538
Target (dBm)	21.0	21.0	21.0
Tolerance ±(dB)	1.0	1.0	1.0
UMTS Band II HSDPA(sub-test 3)			
Channel	Channel 9262	Channel 9400	Channel 9538

Target (dBm)	21.0	21.0	21.0
Tolerance ±(dB)	1.0	1.0	1.0
UMTS Band II HSDPA(sub-test 4)			
Channel	Channel 9262	Channel 9400	Channel 9538
Target (dBm)	21.0	21.0	21.0
Tolerance ±(dB)	1.0	1.0	1.0
UMTS Band II HSUPA(sub-test 1)			
Channel	Channel 9262	Channel 9400	Channel 9538
Target (dBm)	22.0	22.0	22.0
Tolerance ±(dB)	1.0	1.0	1.0
UMTS Band II HSUPA(sub-test 2)			
Channel	Channel 9262	Channel 9400	Channel 9538
Target (dBm)	22.0	22.0	22.0
Tolerance ±(dB)	1.0	1.0	1.0
UMTS Band II HSUPA(sub-test 3)			
Channel	Channel 9262	Channel 9400	Channel 9538
Target (dBm)	22.0	22.0	22.0
Tolerance ±(dB)	1.0	1.0	1.0
UMTS Band II HSUPA(sub-test 4)			
Channel	Channel 9262	Channel 9400	Channel 9538
Target (dBm)	22.0	22.0	22.0
Tolerance ±(dB)	1.0	1.0	1.0
UMTS Band II HSUPA(sub-test 5)			
Channel	Channel 9262	Channel 9400	Channel 9538
Target (dBm)	22.0	22.0	22.0
Tolerance ±(dB)	1.0	1.0	1.0

LTE Band 2 <SIM1>

BW:1.4MHz [<RB=1>]						
Channel	Channel 18607		Channel 18900		Channel 19193	
	QPSK	16QAM	QPSK	16QAM	QPSK	16QAM
Target (dBm)	24.0	23.0	24.0	23.0	24.0	23.0
Tolerance ±(dB)	1.0	1.0	1.0	1.0	1.0	1.0
BW:1.4MHz [<RB=3>, <RB=6>]						
Channel	Channel 18607		Channel 18900		Channel 19193	
	QPSK	16QAM	QPSK	16QAM	QPSK	16QAM
Target (dBm)	23.0	22.0	23.0	22.0	23.0	22.0
Tolerance ±(dB)	1.0	1.0	1.0	1.0	1.0	1.0
BW:3MHz [<RB=1>]						
Channel	Channel 18615		Channel 18900		Channel 19185	
	QPSK	16QAM	QPSK	16QAM	QPSK	16QAM
Target (dBm)	24.0	23.0	24.0	23.0	24.0	23.0
Tolerance ±(dB)	1.0	1.0	1.0	1.0	1.0	1.0
BW:3MHz [<RB=8>, <RB=15>]						
Channel	Channel 18615		Channel 18900		Channel 19185	
	QPSK	16QAM	QPSK	16QAM	QPSK	16QAM
Target (dBm)	23.0	22.0	23.0	22.0	23.0	22.0
Tolerance ±(dB)	1.0	1.0	1.0	1.0	1.0	1.0
BW:5MHz [<RB=1>]						
Channel	Channel 18625		Channel 18900		Channel 19175	
	QPSK	16QAM	QPSK	16QAM	QPSK	16QAM
Target (dBm)	24.0	23.0	24.0	23.0	24.0	23.0
Tolerance ±(dB)	1.0	1.0	1.0	1.0	1.0	1.0
BW:5MHz [<RB=12>, <RB=25>]						
Channel	Channel 18625		Channel 18900		Channel 19175	
	QPSK	16QAM	QPSK	16QAM	QPSK	16QAM
Target (dBm)	23.0	22.0	23.0	22.0	23.0	22.0
Tolerance ±(dB)	1.0	1.0	1.0	1.0	1.0	1.0
BW:10MHz [<RB=1>]						
Channel	Channel 18650		Channel 18900		Channel 19150	
	QPSK	16QAM	QPSK	16QAM	QPSK	16QAM
Target (dBm)	24.0	23.0	24.0	23.0	24.0	23.0

Tolerance ±(dB)	1.0	1.0	1.0	1.0	1.0	1.0
BW:10MHz [<RB=25>, <RB=50>]						
Channel	Channel 18650		Channel 18900		Channel 19150	
	QPSK	16QAM	QPSK	16QAM	QPSK	16QAM
Target (dBm)	23.0	22.0	23.0	22.0	23.0	22.0
Tolerance ±(dB)	1.0	1.0	1.0	1.0	1.0	1.0
BW:15MHz [<RB=1>]						
Channel	Channel 18675		Channel 18900		Channel 19125	
	QPSK	16QAM	QPSK	16QAM	QPSK	16QAM
Target (dBm)	24.0	23.0	24.0	23.0	24.0	23.0
Tolerance ±(dB)	1.0	1.0	1.0	1.0	1.0	1.0
BW:15MHz [<RB=37>, <RB=75>]						
Channel	Channel 18675		Channel 18900		Channel 19125	
	QPSK	16QAM	QPSK	16QAM	QPSK	16QAM
Target (dBm)	23.0	22.0	23.0	22.0	23.0	22.0
Tolerance ±(dB)	1.0	1.0	1.0	1.0	1.0	1.0
BW:20MHz [<RB=1>]						
Channel	Channel 18700		Channel 18900		Channel 19100	
	QPSK	16QAM	QPSK	16QAM	QPSK	16QAM
Target (dBm)	24.0	23.0	24.0	23.0	24.0	23.0
Tolerance ±(dB)	1.0	1.0	1.0	1.0	1.0	1.0
BW:20MHz [<RB=50>, <RB=100>]						
Channel	Channel 18700		Channel 18900		Channel 19100	
	QPSK	16QAM	QPSK	16QAM	QPSK	16QAM
Target (dBm)	23.0	22.0	23.0	22.0	23.0	22.0
Tolerance ±(dB)	1.0	1.0	1.0	1.0	1.0	1.0

LTE Band 5 <SIM1>

BW:1.4MHz [<RB=1>]						
Channel	Channel 20407		Channel 20525		Channel 20643	
	QPSK	16QAM	QPSK	16QAM	QPSK	16QAM
Target (dBm)	24.0	23.0	24.0	23.0	24.0	23.0
Tolerance ±(dB)	1.0	1.0	1.0	1.0	1.0	1.0
BW:1.4MHz [<RB=3>, <RB=6>]						
Channel	Channel 20407		Channel 20525		Channel 20643	
	QPSK	16QAM	QPSK	16QAM	QPSK	16QAM
Target (dBm)	23.0	22.0	23.0	22.0	23.0	22.0
Tolerance ±(dB)	1.0	1.0	1.0	1.0	1.0	1.0
BW:3MHz [<RB=1>]						
Channel	Channel 20415		Channel 20525		Channel 20635	
	QPSK	16QAM	QPSK	16QAM	QPSK	16QAM
Target (dBm)	24.0	23.0	24.0	23.0	24.0	23.0
Tolerance ±(dB)	1.0	1.0	1.0	1.0	1.0	1.0
BW:3MHz [<RB=8>, <RB=15>]						
Channel	Channel 20415		Channel 20525		Channel 20635	
	QPSK	16QAM	QPSK	16QAM	QPSK	16QAM
Target (dBm)	23.0	22.0	23.0	22.0	23.0	22.0
Tolerance ±(dB)	1.0	1.0	1.0	1.0	1.0	1.0
BW:5MHz [<RB=1>]						
Channel	Channel 20425		Channel 20525		Channel 20625	
	QPSK	16QAM	QPSK	16QAM	QPSK	16QAM
Target (dBm)	24.0	23.0	24.0	23.0	24.0	23.0
Tolerance ±(dB)	1.0	1.0	1.0	1.0	1.0	1.0
BW:5MHz [<RB=12>, <RB=25>]						
Channel	Channel 20425		Channel 20525		Channel 20625	
	QPSK	16QAM	QPSK	16QAM	QPSK	16QAM
Target (dBm)	23.0	22.0	23.0	22.0	23.0	22.0
Tolerance ±(dB)	1.0	1.0	1.0	1.0	1.0	1.0
BW:10MHz [<RB=1>]						
Channel	Channel 20450		Channel 20525		Channel 20600	
	QPSK	16QAM	QPSK	16QAM	QPSK	16QAM
Target (dBm)	24.0	23.0	24.0	23.0	24.0	23.0

Tolerance ±(dB)	1.0	1.0	1.0	1.0	1.0	1.0
BW:10MHz [<RB=25>, <RB=50>]						
Channel	Channel 20450		Channel 20525		Channel 20600	
	QPSK	16QAM	QPSK	16QAM	QPSK	16QAM
Target (dBm)	23.0	22.0	23.0	22.0	23.0	22.0
Tolerance ±(dB)	1.0	1.0	1.0	1.0	1.0	1.0

LTE Band 7 <SIM1>

BW:5MHz [<RB=1>]						
Channel	Channel 20775		Channel 21100		Channel 21425	
	QPSK	16QAM	QPSK	16QAM	QPSK	16QAM
Target (dBm)	23.0	22.0	24.0	23.0	24.0	23.0
Tolerance ±(dB)	1.0	1.0	1.0	1.0	1.0	1.0
BW:5MHz [<RB=12>, <RB=25>]						
Channel	Channel 20775		Channel 21100		Channel 21425	
	QPSK	16QAM	QPSK	16QAM	QPSK	16QAM
Target (dBm)	22.0	21.0	23.0	22.0	23.0	22.0
Tolerance ±(dB)	1.0	1.0	1.0	1.0	1.0	1.0
BW:10MHz [<RB=1>]						
Channel	Channel 20800		Channel 21100		Channel 21400	
	QPSK	16QAM	QPSK	16QAM	QPSK	16QAM
Target (dBm)	23.0	22.0	24.0	23.0	24.0	23.0
Tolerance ±(dB)	1.0	1.0	1.0	1.0	1.0	1.0
BW:10MHz [<RB=25>, <RB=50>]						
Channel	Channel 20800		Channel 21100		Channel 21400	
	QPSK	16QAM	QPSK	16QAM	QPSK	16QAM
Target (dBm)	22.0	21.0	23.0	22.0	23.0	22.0
Tolerance ±(dB)	1.0	1.0	1.0	1.0	1.0	1.0
BW:15MHz [<RB=1>]						
Channel	Channel 20825		Channel 21100		Channel 21375	
	QPSK	16QAM	QPSK	16QAM	QPSK	16QAM
Target (dBm)	23.0	22.0	24.0	23.0	24.0	23.0
Tolerance ±(dB)	1.0	1.0	1.0	1.0	1.0	1.0
BW:15MHz [<RB=37>, <RB=75>]						
Channel	Channel 20825		Channel 21100		Channel 21375	
	QPSK	16QAM	QPSK	16QAM	QPSK	16QAM
Target (dBm)	22.0	21.0	23.0	22.0	23.0	22.0
Tolerance ±(dB)	1.0	1.0	1.0	1.0	1.0	1.0
BW:20MHz [<RB=1>]						
Channel	Channel 20850		Channel 21100		Channel 21350	
	QPSK	16QAM	QPSK	16QAM	QPSK	16QAM
Target (dBm)	23.0	22.0	24.0	23.0	24.0	23.0
Tolerance ±(dB)	1.0	1.0	1.0	1.0	1.0	1.0
BW:20MHz [<RB=50>, <RB=100>]						
Channel	Channel 20850		Channel 21100		Channel 21350	
	QPSK	16QAM	QPSK	16QAM	QPSK	16QAM
Target (dBm)	22.0	21.0	23.0	22.0	23.0	22.0
Tolerance ±(dB)	1.0	1.0	1.0	1.0	1.0	1.0

LTE Band 12 <SIM1>

BW:1.4MHz [<RB=1>]						
Channel	Channel 23017		Channel 23095		Channel 23173	
	QPSK	16QAM	QPSK	16QAM	QPSK	16QAM
Target (dBm)	25.0	24.0	25.0	24.0	25.0	24.0
Tolerance ±(dB)	1.0	1.0	1.0	1.0	1.0	1.0
BW:1.4MHz [<RB=3>, <RB=6>]						
Channel	Channel 23017		Channel 23095		Channel 23173	
	QPSK	16QAM	QPSK	16QAM	QPSK	16QAM
Target (dBm)	24.0	23.0	24.0	23.0	24.0	23.0
Tolerance ±(dB)	1.0	1.0	1.0	1.0	1.0	1.0
BW:3MHz [<RB=1>]						

Channel	Channel 23025		Channel 23095		Channel 23165	
	QPSK	16QAM	QPSK	16QAM	QPSK	16QAM
Target (dBm)	25.0	24.0	25.0	24.0	24.0	23.0
Tolerance ±(dB)	1.0	1.0	1.0	1.0	1.0	1.0
BW:3MHz [<RB=8>, <RB=15>]						
Channel	Channel 23025		Channel 23095		Channel 23165	
	QPSK	16QAM	QPSK	16QAM	QPSK	16QAM
Target (dBm)	24.0	23.0	24.0	23.0	23.0	22.0
Tolerance ±(dB)	1.0	1.0	1.0	1.0	1.0	1.0
BW:5MHz [<RB=1>]						
Channel	Channel 23035		Channel 23095		Channel 23155	
	QPSK	16QAM	QPSK	16QAM	QPSK	16QAM
Target (dBm)	25.0	24.0	25.0	24.0	25.0	24.0
Tolerance ±(dB)	1.0	1.0	1.0	1.0	1.0	1.0
BW:5MHz [<RB=12>, <RB=25>]						
Channel	Channel 23035		Channel 23095		Channel 23155	
	QPSK	16QAM	QPSK	16QAM	QPSK	16QAM
Target (dBm)	24.0	23.0	24.0	23.0	24.0	23.0
Tolerance ±(dB)	1.0	1.0	1.0	1.0	1.0	1.0
BW:10MHz [<RB=1>]						
Channel	Channel 23060		Channel 23095		Channel 23130	
	QPSK	16QAM	QPSK	16QAM	QPSK	16QAM
Target (dBm)	25.0	240	25.0	24.0	25.0	24.0
Tolerance ±(dB)	1.0	1.0	1.0	1.0	1.0	1.0
BW:10MHz [<RB=25>, <RB=50>]						
Channel	Channel 23060		Channel 23095		Channel 23130	
	QPSK	16QAM	QPSK	16QAM	QPSK	16QAM
Target (dBm)	24.0	23.0	24.0	23.0	24.0	23.0
Tolerance ±(dB)	1.0	1.0	1.0	1.0	1.0	1.0

WiFi 2.4G

IEEE 802.11b (Average)			
Channel	Channel 1	Channel 6	Channel 11
Target (dBm)	16.0	16.0	16.0
Tolerance ±(dB)	1.0	1.0	1.0
IEEE 802.11g (Average)			
Channel	Channel 1	Channel 6	Channel 11
Target (dBm)	15.0	15.0	15.0
Tolerance ±(dB)	1.0	1.0	1.0
IEEE 802.11n HT20 (Average)			
Channel	Channel 1	Channel 6	Channel 11
Target (dBm)	15.0	15.0	15.0
Tolerance ±(dB)	1.0	1.0	1.0

Bluetooth V4.0

BLE-GFSK (Average)			
Channel	Channel 0	Channel 19	Channel 39
Target (dBm)	0	0	0
Tolerance ±(dB)	1.0	1.0	1.0
GFSK (Average)			
Channel	Channel 0	Channel 39	Channel 78
Target (dBm)	2.0	2.0	2.0
Tolerance ±(dB)	1.0	1.0	1.0
8DPSK (Average)			
Channel	Channel 0	Channel 39	Channel 78
Target (dBm)	1.0	1.0	1.0
Tolerance ±(dB)	1.0	1.0	1.0
π/4DQPSK (Average)			
Channel	Channel 0	Channel 39	Channel 78
Target (dBm)	1.0	1.0	1.0
Tolerance ±(dB)	1.0	1.0	1.0

This report shall not be reproduced except in full, without the written approval of Shenzhen LCS Compliance Testing Laboratory Ltd.

5.3. Transmit Antennas Position

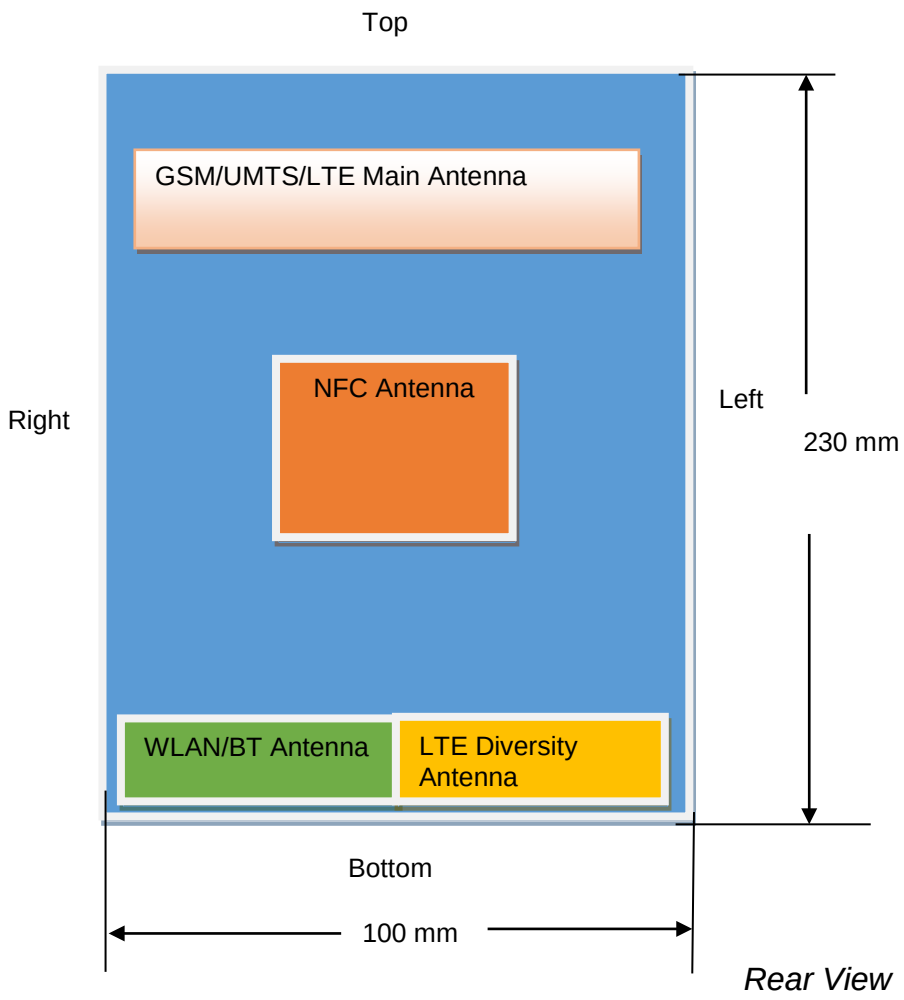

Antenna information:

GSM/UMTS/LTE Main Antenna	GSM/UMTS/LTE TX/RX Antenna
WLAN/BT Antenna	WLAN/BT TX/RX Antenna
LTE Diversity Antenna	LTE RX Antenna
NFC Antenna	NFC TX/RX Antenna

Distance of The Antenna to the EUT surface and edge						
Antennas	**Front**	**Rear**	**Top**	**Bottom**	**Left**	**Right**
WWAN	12mm	<5mm	10mm	160mm	20mm	<5mm
BT/WLAN	<5mm	<5mm	206mm	<5mm	35mm	<5mm

5.4. Standalone SAR Test Exclusion Considerations

Per KDB447498 for standalone 1-g head or body SAR evaluation by measurement or numerical simulation is not required when the corresponding SAR Exclusion Threshold condition, listed below, is satisfied.
a) The 1-g and 10-g SAR test exclusion thresholds for 100 MHz to 6 GHz at test separation distances ≤ 50 mm are determined by:
[(max. power of channel, including tune-up tolerance, mW) / (min. test separation distance, mm)] ·[√ f(GHz)] ≤ 3.0 for 1-g SAR and ≤ 7.5 for 10-g extremity SAR, where
● f(GHz) is the RF channel transmit frequency in GHz
● Power and distance are rounded to the nearest mW and mm before calculation
● The result is rounded to one decimal place for comparison
● 3.0 and 7.5 are referred to as the numeric thresholds in the step 2 below
b) For 100 MHz to 6 GHz and test separation distances > 50 mm, the 1-g and 10-g SAR test exclusion thresholds are determined by the following (also illustrated in Appendix B):
1) {[Power allowed at numeric threshold for 50 mm in step a)] + [(test separation distance – 50 mm)·(f(MHz)/150)]} mW, for 100 MHz to 1500 MHz

2) {[Power allowed at numeric threshold for 50 mm in step a)] + [(test separation distance – 50 mm)·10]} mW, for > 1500 MHz and ≤ 6 GHz

5.5. Standalone Estimated SAR

Standalone SAR test exclusion considerations – Body- worn							
Modulation	Frequency (MHz)	Configuration	Maximum Average Power (dBm)	Separation Distance (mm)	Calculation Result	SAR Exclusion Thresholds	Standalone SAR Exclusion
GSM	850	Body - Back	24.98	5	58.0	3.0	no
GSM	1900	Body - Back	23.74	5	65.2	3.0	no
UMTS	850	Body - Back	24.00	5	46.3	3.0	no
UMTS	1900	Body - Back	24.00	5	69.2	3.0	no
LTE Band 2	1900	Body - Back	25.00	5	87.2	3.0	no
LTE Band 5	850	Body - Back	25.00	5	58.3	3.0	no
LTE Band 7	2600	Body - Back	25.00	5	102.0	3.0	no
LTE Band 12	750	Body - Back	26.00	5	69.0	3.0	no
IEEE 802.11b	2450	Body - Back	17.00	5	15.7	3.0	no
IEEE 802.11g	2450	Body - Back	16.00	5	12.5	3.0	no
IEEE 802.11n HT20	2450	Body - Back	16.00	5	12.5	3.0	no
Bluetooth*	2450	Body - Back	3.00	5	0.6	3.0	yes

Remark:

1. *Maximum average power including tune-up tolerance;*
2. *When the minimum test separation distance is < 5 mm, a distance of 5 mm is applied to determine SAR test exclusion;*
3. *Per April 2017 TCB Workshop - In general, do not test surface that faces away from user or user's hands unless there is an exposure concern;*
4. *Body as body use distance is 0 mm from manufacturer declaration of user manual.*

This report shall not be reproduced except in full, without the written approval of Shenzhen LCS Compliance Testing Laboratory Ltd.

Standalone SAR test exclusion considerations – Extremity							
Modulation	Frequency (MHz)	Configuration	Maximum Average Power (dBm)	Separation Distance (mm)	Calculation Result	SAR Exclusion Thresholds	Standalone SAR Exclusion
GSM	850	Top	24.98	10	29.5	7.5	no
		Bottom	24.98	160	24.98 dBm	30.13 dBm	yes
		Left	24.98	20	14.5	7.5	no
		Right	24.98	5	58.0	7.5	no
GSM	1900	Top	23.74	10	32.6	7.5	no
		Bottom	23.74	160	23.74 dBm	31.37 dBm	yes
		Left	23.74	20	16.3	7.5	no
		Right	23.74	5	65.2	7.5	no
UMTS	850	Top	24.00	10	23.2	7.5	no
		Bottom	24.00	160	24.00 dBm	30.13 dBm	yes
		Left	24.00	20	11.6	7.5	no
		Right	24.00	5	46.6	7.5	no
UMTS	1900	Top	24.00	10	34.6	7.5	no
		Bottom	24.00	160	24.00 dBm	31.37 dBm	
		Left	24.00	20	17.3	7.5	
		Right	24.00	5	69.2	7.5	
LTE Band 2	1900	Top	25.00	10	43.6	7.5	no
		Bottom	25.00	160	25.00 dBm	31.37 dBm	
		Left	25.00	20	21.8	7.5	
		Right	25.00	5	87.2	7.5	
LTE Band 5	850	Top	25.00	10	29.2	7.5	no
		Bottom	25.00	160	25.00 dBm	30.24 dBm	yes
		Left	25.00	20	14.6	7.5	no
		Right	25.00	5	58.3	7.5	no
LTE Band 7	2600	Top	25.00	10	51.0	7.5	no
		Bottom	25.00	160	25.00 dBm	31.25 dBm	yes
		Left	25.00	20	25.5	7.5	no
		Right	25.00	5	102.0	7.5	no
LTE Band 12	750	Top	26.00	10	34.5	7.5	no
		Bottom	26.00	160	26.00 dBm	30.13 dBm	yes
		Left	26.00	20	17.2	7.5	no
		Right	26.00	5	69.0	7.5	no
IEEE 802.11b	2450	Top	17.00	206	17.00 dBm	32.55 dBm	yes
		Bottom	17.00	5	15.7	7.5	no
		Left	17.00	35	2.2	7.5	no
		Right	17.00	5	15.7	7.5	yes
IEEE 802.11g	2450	Top	16.00	206	16.00 dBm	32.55 dBm	yes
		Bottom	16.00	5	12.5	7.5	no
		Left	16.00	35	1.8	7.5	no
		Right	16.00	5	15.7	7.5	yes
IEEE 802.11n HT20	2450	Top	16.00	206	16.00 dBm	32.55 dBm	yes
		Bottom	16.00	5	12.5	7.5	no
		Left	16.00	35	1.8	7.5	no
		Right	16.00	5	15.7	7.5	yes
Bluetooth*	2450	Top	3.00	206	3.00 dBm	32.55 dBm	yes
		Bottom	3.00	5	0.6	7.5	yes
		Left	3.00	35	0.1	7.5	yes
		Right	3.00	5	0.6	7.5	yes

Remark:

1. *Maximum average power including tune-up tolerance;*
2. *When the minimum test separation distance is < 5 mm, a distance of 5 mm is applied to determine SAR test exclusion;*
3. *Per April 2017 TCB Workshop - In general, do not test surface that faces away from user or user's hands unless there is an exposure concern;*
4. *Body as body use distance is 0 mm from manufacturer declaration of user manual.*

This report shall not be reproduced except in full, without the written approval of Shenzhen LCS Compliance Testing Laboratory Ltd.

5.6. Estimated Standalone SAR

<Standalone SAR >

Per KDB447498 requires when the standalone SAR test exclusion of section 4.3.1 is applied to an antenna that transmits simultaneously with other antennas, the standalone SAR must be estimated according to the following to determine simultaneous transmission SAR test exclusion;

● (max. power of channel, including tune-up tolerance, mW)/ (min. test separation distance, mm)] • [√ f(GHz)/x] W/kg for test separation distances ≤ 50 mm;

Where x = 7.5 for 1-g SAR, and x = 18.75 for 10-g SAR.

● 0.4 W/kg for 1-g SAR and 1.0 W/kg for 10-g SAR, when the test separation distances is > 50 mm

Per FCC KD B447498 D01, simultaneous transmission SAR test exclusion may be applied when the sum of the 1-g SAR for the entire transmitting antenna in a specific a physical test configuration is ≤1.6 W/Kg. When the sum is greater than the SAR limit, AR test exclusion is determined by the SAR to peak location separation ratio.

$$\text{Ratio}=\frac{(\text{SAR}_1+\text{SAR}_2)^{1.5}}{(\text{peak location separation,mm})}<0.04$$

Estimated Standalone SAR

Estimated stand alone SAR – Body worn					
Communication system	Frequency (MHz)	Configuration	Maximum Power (dBm)	Separation Distance (mm)	Estimated SAR_{1-g} (W/kg)
Bluetooth*	2450	Body-worn	3.00	5.00	0.083

Estimated stand alone SAR – Extremity					
Communication system	Frequency (MHz)	Configuration	Maximum Power (dBm)	Separation Distance (mm)	Estimated SAR_{10-g} (W/kg)
Bluetooth*	2450	Extremity	3.00	5.00	0.033

Remark:

1. Maximum average power including tune-up tolerance;

2. When the minimum test separation distance is < 5 mm, a distance of 5 mm is applied to determine SAR test exclusion;

3. Bluetooth - including Bluetooth lower energy and Bluetooth classics;*

5.7. SAR Measurement Results

The calculated SAR is obtained by the following formula:

Reported SAR=Measured SAR*$10^{(Ptarget-Pmeasured))/10}$

Scaling factor=$10^{(Ptarget-Pmeasured))/10}$

Reported SAR= Measured SAR* Scaling factor

Where P_{target} is the power of manufacturing upper limit;

$P_{measured}$ is the measured power;

Measured SAR is measured SAR at measured power which including power drift)

Reported SAR which including Power Drift and Scaling factor

Duty Cycle

Test Mode	Duty Cycle
GPRS850	1:4
GPRS1900	1:2.67
UMTS Band V	1:1
UMTS Band II	1:1
LTE Band 2	1:1
LTE Band 5	1:1
LTE Band 7	1:1
LTE Band 12	1:1
2.4GWLAN	1:1

5.8. SAR Reporting Results

<Standalone SAR >

SAR Values [GSM850 (GSM/GPRS/EGPRS)]

Ch.	Freq. (MHz)	Time slots	Test Position	Conducted Power (dBm)	Maximum Allowed Power (dBm)	Power Drift	Scaling Factor	SAR_{1-g} results(W/kg)		Graph Results
								Measured	Reported	
measured / reported SAR numbers – Body worn (distance 0mm) <SIM1>										
190	836.6	2Txslots	Back	30.53	31.00	-0.02	1.114	**0.555**	**0.618**	Plot 1
Worst case measured / reported SAR numbers – Body worn <SIM2>										
190	836.6	2Txslots	Back	30.49	31.00	0.13	1.125	0.513	0.577	
Ch.	Freq. (MHz)	Time slots	Test Position	Conducted Power (dBm)	Maximum Allowed Power (dBm)	Power Drift	Scaling Factor	SAR_{10-g} results(W/kg)		Graph Results
								Measured	Reported	
measured / reported SAR numbers - Extremity (distance 0mm) <SIM1>										
190	836.6	2Txslots	Left	30.53	31.00	-0.11	1.114	0.782	0.871	
190	836.6	2Txslots	Right	30.53	31.00	0.03	1.114	**1.41**	**1.571**	Plot 2
190	836.6	2Txslots	Top	30.53	31.00	0.06	1.114	1.06	1.181	
measured / reported SAR numbers - Extremity (distance 0mm) <SIM2>										
190	836.6	2Txslots	Right	30.49	31.00	-0.16	1.125	1.29	1.451	

Remark:
1. The value with block color is the maximum SAR Value of each test band.
2. The frame average of GPRS (2Tx slots) is highest of other slots.
3. Per FCC KDB Publication 447498 D01, if the reported (scaled) SAR measured at the middle channel or highest output power channel for each test configuration is ≤ 0.8 W/kg or 2.0 W/kg, for 1-g or 10-g respectively, when the transmission band is ≤ 100 MHz, then testing at the other channels is optional for such test configuration(s).
4. Measured worst case at SIM2 based on SIM1 full results.

SAR Values [GSM 1900 (GSM/GPRS/EGPRS)]

Ch.	Freq. (MHz)	Time slots	Test Position	Conducted Power (dBm)	Maximum Allowed Power (dBm)	Power Drift	Scaling Factor	SAR_{1-g} results(W/kg)		Graph Results
								Measured	Reported	
measured / reported SAR numbers – Body worn (distance 0mm) <SIM1>										
661	1880.0	3Txslots	Back	27.94	28.00	-0.04	1.014	**0.444**	**0.450**	Plot 3
Worst case measured / reported SAR numbers – Body worn <SIM2>										
661	1880.0	3Txslots	Back	27.90	28.00	-0.01	1.023	0.421	0.431	
Ch.	Freq. (MHz)	Time slots	Test Position	Conducted Power (dBm)	Maximum Allowed Power (dBm)	Power Drift	Scaling Factor	SAR_{10-g} results(W/kg)		Graph Results
								Measured	Reported	
measured / reported SAR numbers - Extremity (distance 0mm) <SIM1>										
661	1880.0	3Txslots	Left	27.94	28.00	-0.13	1.014	0.469	0.476	
661	1880.0	3Txslots	Right	27.94	28.00	-0.01	1.014	**0.574**	**0.582**	Plot 4
661	1880.0	3Txslots	Top	27.94	28.00	-0.10	1.014	0.536	0.544	
measured / reported SAR numbers - Extremity (distance 0mm) <SIM2>										
661	1880.0	3Txslots	Right	27.90	28.00	-0.05	1.023	0.566	0.579	

Remark:
1. The value with block color is the maximum SAR Value of each test band.
2. The frame average of GPRS (3Tx slots) is highest of other slots.
3. Per FCC KDB Publication 447498 D01, if the reported (scaled) SAR measured at the middle channel or highest output power channel for each test configuration is ≤ 0.8 W/kg or 2.0 W/kg, for 1-g or 10-g respectively, when the transmission band is ≤ 100 MHz, then testing at the other channels is optional for such test configuration(s).
4. Measured worst case at SIM2 based on SIM1 full results.

This report shall not be reproduced except in full, without the written approval of Shenzhen LCS Compliance Testing Laboratory Ltd.

SAR Values [UMTS Band V (WCDMA/HSDPA/HSUPA]

Ch.	Freq. (MHz)	Channel Type	Test Position	Conducted Power (dBm)	Maximum Allowed Power (dBm)	Power Drift	Scaling Factor	SAR_{1-g} results(W/kg) Measured	SAR_{1-g} results(W/kg) Reported	Graph Results
measured / reported SAR numbers – Body worn (distance 0mm) <SIM1>										
4183	836.6	RMC*	Back	23.35	24.00	0.08	1.161	**0.496**	**0.576**	Plot 5
Ch.	Freq. (MHz)	Channel Type	Test Position	Conducted Power (dBm)	Maximum Allowed Power (dBm)	Power Drift	Scaling Factor	SAR_{10-g} results(W/kg) Measured	SAR_{10-g} results(W/kg) Reported	Graph Results
measured / reported SAR numbers - Extremity (distance 0mm) <SIM1>										
190	836.6	RMC*	Left	23.35	24.00	0.04	1.161	0.688	0.799	
190	836.6	RMC*	Right	23.35	24.00	-0.12	1.161	**1.24**	**1.440**	Plot 6
190	836.6	RMC*	Top	23.35	24.00	0.01	1.161	0.985	1.144	

Remark:
1. The value with block color is the maximum SAR Value of each test band.
2. RMC - RMC 12.2kbps mode;*
3. Per FCC KDB Publication 447498 D01, if the reported (scaled) SAR measured at the middle channel or highest output power channel for each test configuration is ≤ 0.8 W/kg or 2.0 W/kg, for 1-g or 10-g respectively, when the transmission band is ≤ 100 MHz, then testing at the other channels is optional for such test configuration(s).

SAR Values [UMTS Band II (WCDMA/HSDPA/HSUPA]

Ch.	Freq. (MHz)	Channel Type	Test Position	Conducted Power (dBm)	Maximum Allowed Power (dBm)	Power Drift	Scaling Factor	SAR_{1-g} results(W/kg) Measured	SAR_{1-g} results(W/kg) Reported	Graph Results
measured / reported SAR numbers – Body worn (distance 0mm) <SIM1>										
9400	1880.0	RMC*	Back	23.66	24.00	0.12	1.081	**0.459**	**0.496**	Plot 7
Ch.	Freq. (MHz)	Channel Type	Test Position	Conducted Power (dBm)	Maximum Allowed Power (dBm)	Power Drift	Scaling Factor	SAR_{10-g} results(W/kg) Measured	SAR_{10-g} results(W/kg) Reported	Graph Results
measured / reported SAR numbers - Extremity (distance 0mm) <SIM1>										
9400	1880.0	RMC*	Left	23.66	24.00	-0.11	1.081	0.527	0.570	
9400	1880.0	RMC*	Right	23.66	24.00	0.00	1.081	**0.743**	**0.803**	Plot 8
9400	1880.0	RMC*	Top	23.66	24.00	0.06	1.081	0.696	0.752	

Remark:
1. The value with block color is the maximum SAR Value of each test band.
2. RMC - RMC 12.2kbps mode;*
3. Per FCC KDB Publication 447498 D01, if the reported (scaled) SAR measured at the middle channel or highest output power channel for each test configuration is ≤ 0.8 W/kg or 2.0 W/kg, for 1-g or 10-g respectively, when the transmission band is ≤ 100 MHz, then testing at the other channels is optional for such test configuration(s).

SAR Values [LTE Band 2]

Ch.	Freq. (MHz)	Channel Type (20M)	Test Position	Conducted Power (dBm)	Maximum Allowed Power (dBm)	Power Drift	Scaling Factor	SAR_{1-g} results(W/kg) Measured	SAR_{1-g} results(W/kg) Reported	Graph Results
measured / reported SAR numbers – Body worn (distance 0mm) <SIM1>										
18700	1860.0	1RB	Back	24.99	25.00	-0.05	1.002	**0.575**	**0.576**	Plot 9
18700	1860.0	50%RB	Back	23.96	24.00	-0.01	1.009	0.422	0.426	
Ch.	Freq. (MHz)	Channel Type (20M)	Test Position	Conducted Power (dBm)	Maximum Allowed Power (dBm)	Power Drift	Scaling Factor	SAR_{10-g} results(W/kg) Measured	SAR_{10-g} results(W/kg) Reported	Graph Results
measured / reported SAR numbers - Extremity (distance 0mm) <SIM1>										
18700	1860.0	1RB	Left	24.99	25.00	0.06	1.002	0.538	0.539	
18700	1860.0	1RB	Right	24.99	25.00	0.02	1.002	**0.761**	**0.763**	Plot 10
18700	1860.0	1RB	Top	24.99	25.00	-0.06	1.002	0.711	0.712	
18700	1860.0	50%RB	Left	23.96	24.00	0.11	1.009	0.446	0.450	
18700	1860.0	50%RB	Right	23.96	24.00	-0.13	1.009	0.579	0.584	
18700	1860.0	50%RB	Top	23.96	24.00	0.19	1.009	0.537	0.542	

This report shall not be reproduced except in full, without the written approval of Shenzhen LCS Compliance Testing Laboratory Ltd.

Remark:
1. The value with block color is the maximum SAR Value of each test band.
2. Per FCC KDB Publication 447498 D01, if the reported (scaled) SAR measured at the middle channel or highest output power channel for each test configuration is ≤ 0.8 W/kg or 2.0 W/kg, for 1-g or 10-g respectively, when the transmission band is ≤ 100 MHz, then testing at the other channels is optional for such test configuration(s).

SAR Values [LTE Band 5]

Ch.	Freq. (MHz)	Channel Type (10M)	Test Position	Conducted Power (dBm)	Maximum Allowed Power (dBm)	Power Drift	Scaling Factor	SAR_{1-g} results(W/kg)		Graph Results
								Measured	Reported	
measured / reported SAR numbers – Body worn (distance 0mm) <SIM1>										
20525	836.5	1RB	Back	24.99	25.00	0.02	1.002	**0.584**	**0.585**	Plot 11
20600	844.0	50%RB	Back	23.97	24.00	0.06	1.007	0.477	0.480	
Ch.	Freq. (MHz)	Channel Type (10M)	Test Position	Conducted Power (dBm)	Maximum Allowed Power (dBm)	Power Drift	Scaling Factor	SAR_{10-g} results(W/kg)		Graph Results
								Measured	Reported	
measured / reported SAR numbers - Extremity (distance 0mm) <SIM1>										
20525	836.5	1RB	Left	24.99	25.00	0.01	1.002	0.792	0.794	
20525	836.5	1RB	Right	24.99	25.00	0.03	1.002	**1.37**	**1.373**	Plot 12
20525	836.5	1RB	Top	24.99	25.00	-0.05	1.002	1.09	1.092	
20600	844.0	50%RB	Left	23.97	24.00	0.04	1.007	0.596	0.600	
20600	844.0	50%RB	Right	23.97	24.00	-0.05	1.007	0.982	0.989	
20600	844.0	50%RB	Top	23.97	24.00	-0.13	1.007	0.914	0.920	

Remark:
1. The value with block color is the maximum SAR Value of each test band.
2. Per FCC KDB Publication 447498 D01, if the reported (scaled) SAR measured at the middle channel or highest output power channel for each test configuration is ≤ 0.8 W/kg or 2.0 W/kg, for 1-g or 10-g respectively, when the transmission band is ≤ 100 MHz, then testing at the other channels is optional for such test configuration(s).

SAR Values [LTE Band 7]

Ch.	Freq. (MHz)	Channel Type (20M)	Test Position	Conducted Power (dBm)	Maximum Allowed Power (dBm)	Power Drift	Scaling Factor	SAR_{1-g} results(W/kg)		Graph Results
								Measured	Reported	
measured / reported SAR numbers – Body worn (distance 0mm) <SIM1>										
21100	2535.0	1RB	Back	24.95	25.00	0.04	1.012	**0.669**	**0.677**	Plot 13
21100	2535.0	50%RB	Back	23.95	24.00	0.09	1.012	0.543	0.550	
Ch.	Freq. (MHz)	Channel Type (20M)	Test Position	Conducted Power (dBm)	Maximum Allowed Power (dBm)	Power Drift	Scaling Factor	SAR_{10-g} results(W/kg)		Graph Results
								Measured	Reported	
measured / reported SAR numbers - Extremity (distance 0mm) <SIM1>										
21100	2535.0	1RB	Left	24.95	25.00	-0.07	1.012	1.03	1.042	
21100	2535.0	1RB	Right	24.95	25.00	-0.12	1.012	**1.87**	**1.892**	Plot 14
21100	2535.0	1RB	Top	24.95	25.00	0.04	1.012	1.64	1.660	
21100	2535.0	50%RB	Left	23.95	24.00	-0.01	1.012	0.885	0.896	
21100	2535.0	50%RB	Right	23.95	24.00	-0.09	1.012	1.53	1.548	
21100	2535.0	50%RB	Top	23.95	24.00	-0.05	1.012	1.24	1.255	

Remark:
1. The value with block color is the maximum SAR Value of each test band.
2. Per FCC KDB Publication 447498 D01, if the reported (scaled) SAR measured at the middle channel or highest output power channel for each test configuration is ≤ 0.8 W/kg or 2.0 W/kg, for 1-g or 10-g respectively, when the transmission band is ≤ 100 MHz, then testing at the other channels is optional for such test configuration(s).

This report shall not be reproduced except in full, without the written approval of Shenzhen LCS Compliance Testing Laboratory Ltd.

SAR Values [LTE Band 12]

Ch.	Freq. (MHz)	Channel Type (10M)	Test Position	Conducted Power (dBm)	Maximum Allowed Power (dBm)	Power Drift	Scaling Factor	SAR_{1-g} results(W/kg) Measured	SAR_{1-g} results(W/kg) Reported	Graph Results
measured / reported SAR numbers – Body worn (distance 0mm) <SIM1>										
23130	711.0	1RB	Back	25.42	26.00	-0.04	1.143	**0.523**	**0.598**	Plot 15
23130	711.0	50%RB	Back	24.36	25.00	0.13	1.159	0.401	0.465	
Ch.	Freq. (MHz)	Channel Type (10M)	Test Position	Conducted Power (dBm)	Maximum Allowed Power (dBm)	Power Drift	Scaling Factor	SAR_{10-g} results(W/kg) Measured	SAR_{10-g} results(W/kg) Reported	Graph Results
measured / reported SAR numbers - Extremity (distance 0mm) <SIM1>										
23130	711.0	1RB	Left	25.42	26.00	0.08	1.143	0.707	0.808	
23130	711.0	1RB	Right	25.42	26.00	0.02	1.143	**1.54**	**1.760**	Plot 16
23130	711.0	1RB	Top	25.42	26.00	-0.14	1.143	1.22	1.394	
23130	711.0	50%RB	Left	24.36	25.00	-0.01	1.159	0.619	0.717	
23130	711.0	50%RB	Right	24.36	25.00	0.13	1.159	1.26	1.460	
23130	711.0	50%RB	Top	24.36	25.00	0.04	1.159	1.01	1.171	

Remark:
1. The value with block color is the maximum SAR Value of each test band.
2. Per FCC KDB Publication 447498 D01, if the reported (scaled) SAR measured at the middle channel or highest output power channel for each test configuration is ≤ 0.8 W/kg or 2.0 W/kg, for 1-g or 10-g respectively, when the transmission band is ≤ 100 MHz, then testing at the other channels is optional for such test configuration(s).

SAR Values [WIFI2.4G]

Ch.	Freq. (MHz)	Service	Test Position	Conducted Power (dBm)	Maximum Allowed Power (dBm)	Power Drift	Scaling Factor	SAR_{1-g} results(W/kg) Measured	SAR_{1-g} results(W/kg) Reported	Graph Results
measured / reported SAR numbers – Body worn (distance 0mm) <SIM1>										
6	2437	DSSS	Back	16.28	17.00	-0.04	1.180	**0.412**	**0.486**	Plot 17
Ch.	Freq. (MHz)	Service	Test Position	Conducted Power (dBm)	Maximum Allowed Power (dBm)	Power Drift	Scaling Factor	SAR_{10-g} results(W/kg) Measured	SAR_{10-g} results(W/kg) Reported	Graph Results
measured / reported SAR numbers - Extremity (distance 0mm) <SIM1>										
6	2437	DSSS	Right	16.28	17.00	-0.04	1.180	**0.747**	**0.881**	Plot 18
6	2437	DSSS	Bottom	16.28	17.00	-0.01	1.180	0.726	0.857	

Remark:
1. The value with block color is the maximum SAR Value of each test band.
2. Per FCC KDB Publication 447498 D01, if the reported (scaled) SAR measured at the middle channel or highest output power channel for each test configuration is ≤ 0.8 W/kg or 2.0 W/kg, for 1-g or 10-g respectively, when the transmission band is ≤ 100 MHz, then testing at the other channels is optional for such test configuration(s).
3. SAR is not required for the following 2.4 GHz OFDM conditions as the highest reported SAR for DSSS is adjusted by the ratio of OFDM to DSSS specified maximum output power and the adjusted SAR is 0.700 [0.881(39.8107/50.1187)] ≤ 1.2 W/Kg.*

5.9. Simultaneous TX SAR Considerations

5.8.1 Introduction

The following procedures adopted from “FCC SAR Considerations for Cell Phones with Multiple Transmitters” are applicable to handsets with built-in unlicensed transmitters such as 802.11 a/b/g/n and Bluetooth devices which may simultaneously transmit with the licensed transmitter.
For the DUT, BT and 2.4GWLAN modules sharing same antenna,GSM and UMTS module sharing a single antenna; 2.4GWLAN/BT and GSM/UMTS share difference antenna, can simultaneous transmit, need consider simultaneous.

Application Simultaneous Transmission information:

Air-Interface	Band (MHz)	Type	Simultaneous Transmissions	Voice over Digital Transport (Data)
GSM/UMTS/LTE	850	DT	Yes,WLAN or BT	N/A
	1900	DT		
	850/1900/700/2600	DT	Yes,WLAN or BT	N/A
WLAN	2450	DT	Yes, GPRS,EGPRS, UMTS, LTE	Yes
BT	2450	DT	Yes, GPRS,EGPRS, UMTS, LTE	N/A
Note:VO-Voice Service only; DT-Digital Transport				

Remark:

1. *BT and WLAN can be active at the same time, but only with interleaving of packages switched on board level. That means that they don't transmit at the same time.*

5.8.2 Evaluation of Simultaneous SAR

The following tables list information which is relevant for the decision if a simultaneous transmit evaluation is necessary according to FCC KDB 447498D01 General RF Exposure Guidance v06.

Body -worn Exposure Conditions

Simultaneous transmission SAR for WiFi and GSM

Test Position	GSM850 Reported SAR_{1-g} (W/Kg)	GSM1900 Reported SAR_{1-g} (W/Kg)	WiFi2.4G Reported SAR_{1-g} (W/Kg)	MAX. ΣSAR_{1-g} (W/Kg)	SAR_{1-g} Limit (W/Kg)	Peak location separation ratio	Simut Meas. Required
Back	**0.618**	0.450	0.488	**1.106**	1.6	no	no

Simultaneous transmission SAR for WiFi and UMTS

Test Position	UMTS Band V Reported SAR_{1-g} (W/Kg)	UMTS Band II Reported SAR_{1-g} (W/Kg)	WiFi2.4G Reported SAR_{1-g} (W/Kg)	MAX. ΣSAR_{1-g} (W/Kg)	SAR_{1-g} Limit (W/Kg)	Peak location separation ratio	Simut Meas. Required
Back	**0.576**	0.496	0.488	**1.064**	1.6	no	no

Simultaneous transmission SAR for WiFi and LTE

Test Position	LTE Band 2 Reported SAR_{1-g} (W/Kg)	LTE Band 5 Reported SAR_{1-g} (W/Kg)	LTE Band 7 Reported SAR_{1-g} (W/Kg)	LTE Band 12 Reported SAR_{1-g} (W/Kg)	WiFi2.4G Reported SAR_{1-g} (W/Kg)	MAX. ΣSAR_{1-g} (W/Kg)	SAR_{1-g} Limit (W/Kg)	Peak location separation ratio	Simut Meas. Required
Back	0.576	0.585	**0.677**	0.598	0.488	**1.165**	1.6	no	no

Simultaneous transmission SAR for BT and GSM

Test Position	GSM850 Reported SAR_{1-g} (W/Kg)	GSM1900 Reported SAR_{1-g} (W/Kg)	BT Estimated SAR_{1-g} (W/Kg)	MAX. ΣSAR_{1-g} (W/Kg)	SAR_{1-g} Limit (W/Kg)	Peak location separation ratio	Simut Meas. Required
Back	**0.618**	0.450	0.083	**0.701**	1.6	no	no

Simultaneous transmission SAR for BT and UMTS

Test Position	UMTS Band V Reported SAR_{1-g} (W/Kg)	UMTS Band II Reported SAR_{1-g} (W/Kg)	BT Estimated SAR_{1-g} (W/Kg)	MAX. ΣSAR_{1-g} (W/Kg)	SAR_{1-g} Limit (W/Kg)	Peak location separation ratio	Simut Meas. Required
Back	**0.576**	0.496	0.083	**0.659**	1.6	no	no

Simultaneous transmission SAR for WiFi and LTE

Test Position	LTE Band 2 Reported SAR_{1-g} (W/Kg)	LTE Band 5 Reported SAR_{1-g} (W/Kg)	LTE Band 7 Reported SAR_{1-g} (W/Kg)	LTE Band 12 Reported SAR_{1-g} (W/Kg)	BT Estimated SAR_{1-g} (W/Kg)	MAX. ΣSAR_{1-g} (W/Kg)	SAR_{1-g} Limit (W/Kg)	Peak location separation ratio	Simut Meas. Required
Back	0.576	0.585	**0.677**	0.598	0.083	**0.760**	1.6	no	no

Remark:
1. The WiFi and BT share same antenna, so cannot transmit at same time;
2. The value with block color is the maximum values of standalone;
3. The value with blue color is the maximum values of $\sum SAR_{1-g}$

Extremity Exposure Conditions

Simultaneous transmission SAR for WiFi and GSM

Test Position	GSM850 Reported SAR_{10-g} (W/Kg)	GSM1900 Reported SAR_{10-g} (W/Kg)	WiFi2.4G Reported SAR_{10-g} (W/Kg)	MAX. ΣSAR_{10-g} (W/Kg)	SAR_{10-g} Limit (W/Kg)	Peak location separation ratio	Simut Meas. Required
Left	0.871	0.476	-	0.871	4.0	no	no
Right	**1.571**	0.582	0.881	**2.452**	4.0	no	no
Bottom	-	-	0.857	0.857	4.0	no	no
Top	1.181	0.544	-	1.181	4.0	no	no

Simultaneous transmission SAR for WiFi and UMTS

Test Position	UMTS Band V Reported SAR_{10-g} (W/Kg)	UMTS Band II Reported SAR_{10-g} (W/Kg)	WiFi2.4G Reported SAR_{10-g} (W/Kg)	MAX. ΣSAR_{10-g} (W/Kg)	SAR_{10-g} Limit (W/Kg)	Peak location separation ratio	Simut Meas. Required
Left	0.799	0.570	-	0.799	4.0	no	no
Right	**1.440**	0.803	0.881	**2.321**	4.0	no	no
Bottom	-	-	0.857	0.857	4.0	no	no
Top	1.144	0.752	-	1.144	4.0	no	no

Simultaneous transmission SAR for WiFi and LTE

Test Position	LTE Band 2 Reported SAR_{10-g} (W/Kg)	LTE Band 5 Reported SAR_{10-g} (W/Kg)	LTE Band 7 Reported SAR_{10-g} (W/Kg)	LTE Band 12 Reported SAR_{1-g} (W/Kg)	WiFi2.4G Reported SAR_{10-g} (W/Kg)	MAX. ΣSAR_{10-g} (W/Kg)	SAR_{10-g} Limit (W/Kg)	Peak location separation ratio	Simut Meas. Required
Left	0.539	0.794	1.042	0.808	-	1.042	4.0	no	no
Right	0.763	1.373	**1.892**	1.760	**0.881**	**2.773**	4.0	no	no
Bottom	-	-	-	-	0.857	0.857	4.0	no	no
Top	0.712	1.092	1.660	1.394	-	1.660	4.0	no	no

Simultaneous transmission SAR for BT and GSM

Test Position	GSM850 Reported SAR_{10-g} (W/Kg)	GSM1900 Reported SAR_{10-g} (W/Kg)	BT Estimated SAR_{10-g} (W/Kg)	MAX. ΣSAR_{10-g} (W/Kg)	SAR_{10-g} Limit (W/Kg)	Peak location separation ratio	Simut Meas. Required
Left	0.871	0.476	-	0.871	4.0	no	no
Right	**1.571**	0.582	0.033	**1.604**	4.0	no	no
Bottom	-	-	0.033	0.033	4.0	no	no
Top	1.181	0.544	-	1.181	4.0	no	no

Simultaneous transmission SAR for BT and UMTS

Test Position	UMTS Band V Reported SAR_{10-g} (W/Kg)	UMTS Band II Reported SAR_{10-g} (W/Kg)	BT Estimated SAR_{10-g} (W/Kg)	MAX. ΣSAR_{10-g} (W/Kg)	SAR_{10-g} Limit (W/Kg)	Peak location separation ratio	Simut Meas. Required
Left	0.799	0.570	-	0.799	4.0	no	no
Right	**1.440**	0.803	0.033	**1.473**	4.0	no	no
Bottom	-	-	0.033	0.033	4.0	no	no
Top	1.144	0.752	-	1.144	4.0	no	no

This report shall not be reproduced except in full, without the written approval of Shenzhen LCS Compliance Testing Laboratory Ltd.

Simultaneous transmission SAR for BT and LTE

Test Position	LTE Band 2 Reported SAR_{10-g} (W/Kg)	LTE Band 5 Reported SAR_{10-g} (W/Kg)	LTE Band 7 Reported SAR_{10-g} (W/Kg)	LTE Band 12 Reported SAR_{1-g} (W/Kg)	BT Estimated SAR_{10-g} (W/Kg)	MAX. ΣSAR_{10-g} (W/Kg)	SAR_{10-g} Limit (W/Kg)	Peak location separation ratio	Simut Meas. Required
Left	0.539	0.794	1.042	0.808	-	1.042	4.0	no	no
Right	0.763	1.373	**1.892**	1.760	0.033	**1.925**	4.0	no	no
Bottom	-	-	-	-	0.033	0.033	4.0	no	no
Top	0.712	1.092	1.660	1.394	-	1.660	4.0	no	no

Remark:
1. The WiFi and BT share same antenna, so cannot transmit at same time;
2. The value with block color is the maximum values of standalone;
3. The value with blue color is the maximum values of $\sum SAR_{10-g}$

5.10. SAR Measurement Variability

SAR measurement variability must be assessed for each frequency band, which is determined by the SAR probe calibration point and tissue-equivalent medium used for the device measurements. When both head and body tissue-equivalent media are required for SAR measurements in a frequency band, the variability measurement procedures should be applied to the tissue medium with the highest measured SAR, using the highest measured SAR configuration for that tissue-equivalent medium. The following procedures are applied to determine if repeated measurements are required.

3) Repeated measurement is not required when the original highest measured SAR is < 0.80 W/kg; steps 2) through 4) do not apply.
4) When the original highest measured SAR is ≥ 0.80 W/kg, repeat that measurement once.
5) Perform a second repeated measurement only if the ratio of largest to smallest SAR for the original and first repeated measurements is > 1.20 or when the original or repeated measurement is ≥ 1.45 W/kg (~ 10% from the 1-g SAR limit).
6) Perform a third repeated measurement only if the original, first or second repeated measurement is ≥ 1.5 W/kg and the ratio of largest to smallest SAR for the original, first and second repeated measurements is > 1.20.

The same procedures should be adapted for measurements according to extremity and occupational exposure limits by applying a factor of 2.5 for extremity exposure and a factor of 5 for occupational exposure to the corresponding SAR thresholds.
Thus the following procedures are applied to determine if repeated measurements are required for extremity exposure.

7) Repeated measurement is not required when the original highest measured SAR is < 2.00 W/kg; steps 6) through 8) do not apply.
8) When the original highest measured SAR is ≥ 2.00 W/kg, repeat that measurement once.
9) Perform a second repeated measurement only if the ratio of largest to smallest SAR for the original and first repeated measurements is > 3.00 or when the original or repeated measurement is ≥ 3.625 W/kg (~ 10% from the 1-g SAR limit).
10) Perform a third repeated measurement only if the original, first or second repeated measurement is ≥ 3.625 W/kg and the ratio of largest to smallest SAR for the original, first and second repeated measurements is > 1.20.

Body -worn Exposure Conditions

Frequency (MHz)	Air Interface	RF Exposure Configuration	Test Position	Repeated SAR (yes/no)	Highest SAR_{1-g} (W/Kg)	First Repeated	
						SAR_{1-g} (W/Kg)	Largest to Smallest SAR Ratio
750	LTE Band 12	Standalone	Back	no	0.523		
850	GSM850	Standalone	Back	no	0.555		
	UMTS Band V	Standalone	Back	no	0.496		
	LTE Band 5	Standalone	Back	no	0.584		
1900	GSM190	Standalone	Back	no	0.444		
	UMTS Band II	Standalone	Back	no	0.459		
	LTE Band 2	Standalone	Back	no	0.575		
2450	2.4GWLAN	Standalone	Back	no	0.412		
2600	LTE Band 7	Standalone	Back	no	0.669		

Extremity Exposure Conditions

Frequency (MHz)	Air Interface	RF Exposure Configuration	Test Position	Repeated SAR (yes/no)	Highest SAR_{10-g} (W/Kg)	First Repeated	
						SAR_{10-g} (W/Kg)	Largest to Smallest SAR Ratio
750	LTE Band 12	Standalone	Right	no	1.54		
850	GSM850	Standalone	Right	no	1.41		
	UMTS Band V	Standalone	Right	no	1.24		
	LTE Band 5	Standalone	Right	no	1.37		
1900	GSM190	Standalone	Right	no	0.574		
	UMTS Band II	Standalone	Right	no	0.743		
	LTE Band 2	Standalone	Right	no	0.761		
2450	2.4GWLAN	Standalone	Right	no	0.747		
2600	LTE Band 7	Standalone	Right	no	1.87		

5.11. Measurement Uncertainty (300 MHz – 3 GHz)

Not required as SAR measurement uncertainty analysis is required in SAR reports only when the highest measured SAR in a frequency band is ≥ 1.5 W/kg for 1-g SAR, ≥ 2.25 W/kg and ≥ 2.4 W/kg applied to extremity and occupational exposure conditions accoridng to KDB865664D01.

5.12. General description of test procedures

1. The DUT is tested using CMU 200 and CMW 500 communications testers as controller unit to set test channels and maximum output power to the DUT, as well as for measuring the conducted peak power.
2. Test positions as described in the tables above are in accordance with the specified test standard.
3. Tests in body position were performed in that configuration, which generates the highest time based averaged output power (see conducted power results).
4. Tests in head position with GSM were performed in voice mode with 1 timeslot unless GPRS/EGPRS/DTM function allows parallel voice and data traffic on 2 or more timeslots.
5. UMTS was tested in RMC mode with 12.2 kbit/s and TPC bits set to ‘all 1’.
6. WiFi was tested in 802.11b/g/n mode with 1 Mbit/s and 6 Mbit/s. According to KDB 248227 the SAR testing for 802.11g/n is not required since When the highest reported SAR for DSSS is adjusted by the ratio of OFDM to DSSS specified maximum output power and the adjusted SAR is ≤ 1.2 W/kg.
7. Required WiFi test channels were selected according to KDB 248227
8. According to FCC KDB pub 248227 D01, When there are multiple test channels with the same measured maximum output power, the channel closest to mid-band frequency is selected for SAR measurement and when there are multiple test channels with the same measured maximum output power and equal separation from mid-band frequency; for example, high and low channels or two mid-band channels, the higher frequency (number) channel is selected for SAR measurement.
9. According to KDB 447498 D01 testing of other required channels within the operating mode of a frequency band is not required when the reported 1-g or 10-g SAR for the mid-band or highest output power channel is:
   ● ≤ 0.8 W/kg or 2.0 W/kg, for 1-g or 10-g respectively, when the transmission band is ≤ 100 MHz
   ● ≤ 0.6 W/kg or 1.5 W/kg, for 1-g or 10-g respectively, when the transmission band is between 100 MHz and 200 MHz
   ● ≤ 0.4 W/kg or 1.0 W/kg, for 1-g or 10-g respectively, when the transmission band is ≥ 200 MHz
10. IEEE 1528-2013 require the middle channel to be tested first. This generally applies to wireless devices that are designed to operate in technologies with tight tolerances for maximum output power variations across channels in the band.
11. Per KDB 648474 D04: “Phones with built-in NFC, wireless charging or similar functions that do not require separate SAR testing for these specific capabilities can generally be tested according to the SAR measurement procedures normally required for the phone.”
12. Per April 2017 TCB Workshop: “In general, do not test surface that faces away from user or user’s hands unless there is an exposure concern”

This report shall not be reproduced except in full, without the written approval of Shenzhen LCS Compliance Testing Laboratory Ltd.

6. System Check Results

System Performance Check at 835 MHz Body TSL

DUT: Dipole835 MHz; Type: D835V2; Serial: 4d143

Date/Time: 09/22/2017 08:51:34 AM

Communication System: DuiJiangJi; Frequency: 835 MHz;Duty Cycle: 1:1

Medium parameters used (interpolated): f = 835 MHz; σ = 0.98 S/m; ε_r = 56.75; ρ = 1000 kg/m^3

Phantom section: Flat Section

DASY5 Configuration:

Probe: EX3DV4 – SN3842; ConvF(9.02, 9.02, 9.02); Calibrated: 08/15/2017;

Sensor-Surface: 2mm (Mechanical Surface Detection)

Electronics: DAE4 Sn1315; Calibrated: 08/15/2017

Phantom: ELI 4.0; Type: QDOVA001BA;

Measurement SW: DASY52, Version 52.8 (2); SEMCAD X Version 14.6.6 (6824)

System Performance Check at 835MHz/Area Scan (61x111x1): Interpolated grid: dx=1.50 mm, dy=1.50 mm

Maximum value of SAR (interpolated) = 1.12 mW/g

System Performance Check at 835MHz/Zoom Scan (7x7x7)/Cube 0: Measurement grid: dx=5mm, dy=5mm, dz=5mm

Reference Value = 37.12 V/m; Power Drift = -0.03 dB

Peak SAR (extrapolated) = 1.41 mW/g

SAR(1 g) = 0.979 mW/g; SAR(10 g) = 0.696 mW/g

Maximum value of SAR (measured) = 1.24 mW/g

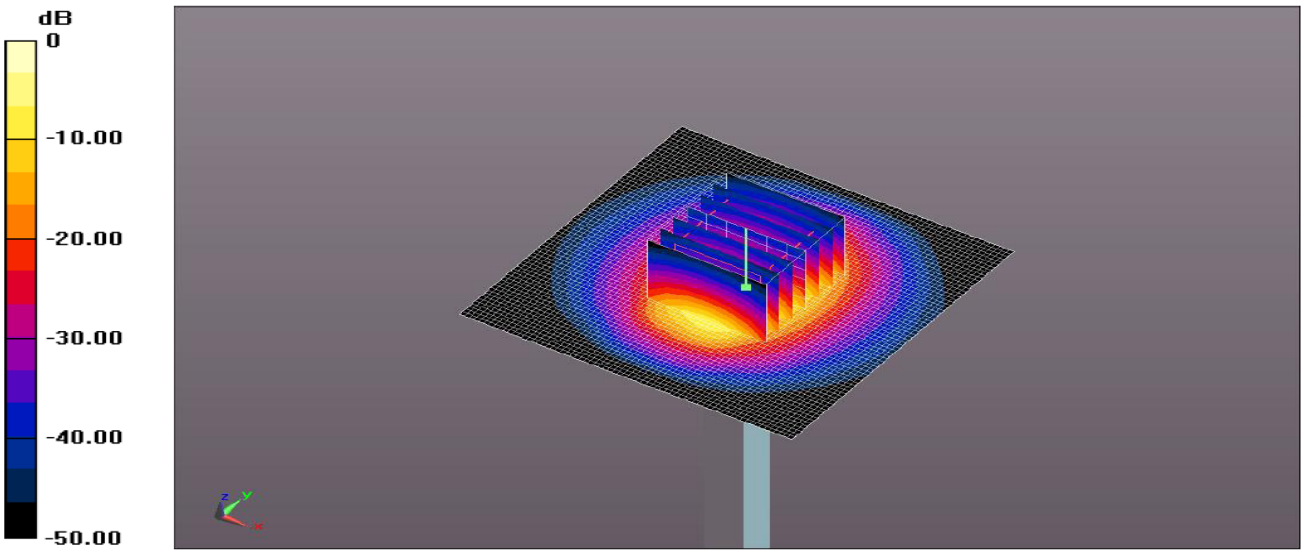

0 dB = 1.24 mW/g = 0.94 dB mW/g

System Performance Check 835MHz Body 100mW

System Performance Check at 1900 MHz Body TSL

DUT: Dipole 1950 MHz; Type: D1950V2; Serial: 1143

Date/Time: 09/23/2017 09:55:19 AM

Communication System: DuiJiangJi; Frequency: 1950 MHz;Duty Cycle: 1:1

Medium parameters used (interpolated): f = 1950 MHz; σ = 1.55 S/m; ε_r = 54.12; ρ = 1000 kg/m^3

Phantom section: Flat Section

DASY5 Configuration:

Probe: EX3DV4 – SN3842; ConvF(7.32, 7.32, 7.32); Calibrated: 08/15/2017;

Sensor-Surface: 2mm (Mechanical Surface Detection)

Electronics: DAE4 Sn1315; Calibrated: 08/15/2017

Phantom: ELI 4.0; Type: QDOVA001BA;

Measurement SW: DASY52, Version 52.8 (2); SEMCAD X Version 14.6.6 (6824)

System Performance Check at 1900MHz/Area Scan (61x111x1): Interpolated grid: dx=1.50 mm, dy=1.50 mm

Maximum value of SAR (interpolated) = 5.32 mW/g

System Performance Check at 1900MHz/Zoom Scan (7x7x7)/Cube 0: Measurement grid: dx=5mm, dy=5mm, dz=5mm

Reference Value = 57.986 V/m; Power Drift = 0.05 dB

Peak SAR (extrapolated) = 7.12 mW/g

SAR(1 g) = 4.12 mW/g; SAR(10 g) = 1.93 mW/g

Maximum value of SAR (measured) = 7.16 mW/g

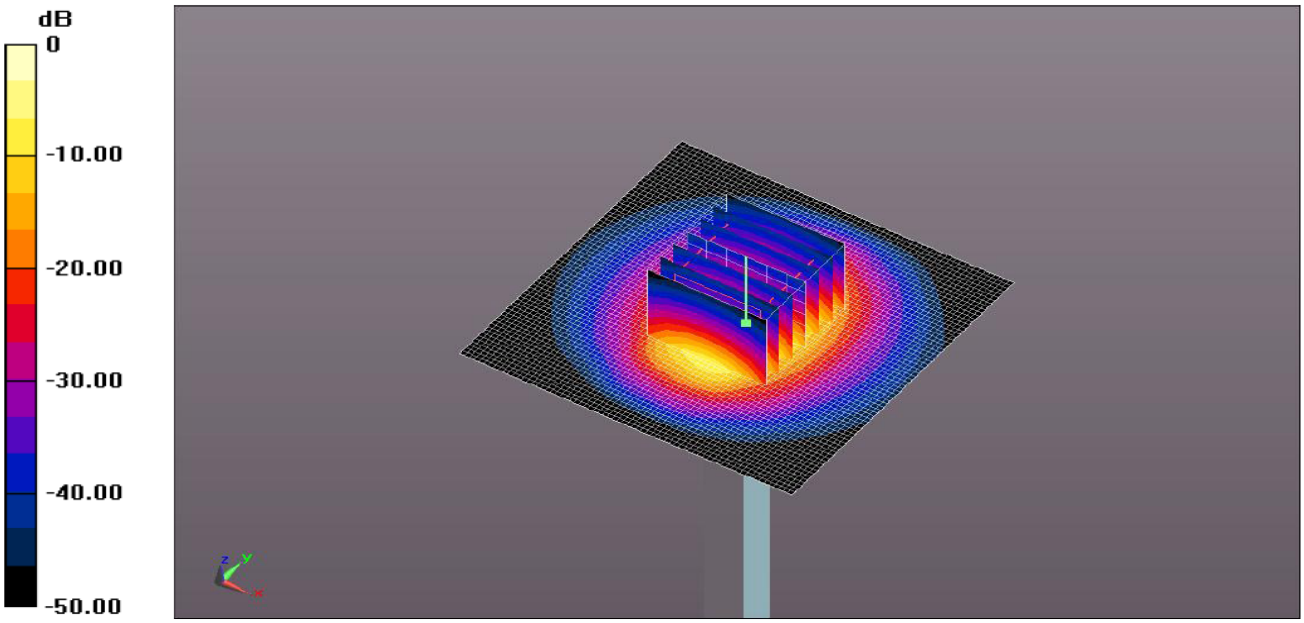

0 dB = 7.16 mW/g = 8.55 dB mW/g

System Performance Check 1900MHz Body 100mW

System Performance Check at 2450 MHz Body TSL

DUT: Dipole 2450 MHz; Type: D2450V2; Serial: 898

Date/Time: 09/24/2017 10:00:35 AM

Communication System: DuiJiangJi; Frequency: 2450 MHz;Duty Cycle: 1:1

Medium parameters used (interpolated): f = 2450 MHz; σ = 1.97 S/m; ε_r = 52.95; ρ = 1000 kg/m^3

Phantom section: Flat Section

DASY5 Configuration:

Probe: EX3DV4 – SN3842; ConvF(7.01, 7.01, 7.01); Calibrated: 08/15/2017;

Sensor-Surface: 2mm (Mechanical Surface Detection)

Electronics: DAE4 Sn1315; Calibrated: 08/15/2017

Phantom: ELI 4.0; Type: QDOVA001BA;

Measurement SW: DASY52, Version 52.8 (2); SEMCAD X Version 14.6.6 (6824)

System Performance Check at 2450MHz/Area Scan (81x111x1): Interpolated grid: dx=1.20 mm, dy=1.20 mm

Maximum value of SAR (interpolated) = 6.34 mW/g

System Performance Check at 2450MHz/Zoom Scan (7x7x7)/Cube 0: Measurement grid: dx=5mm, dy=5mm, dz=5mm

Reference Value = 73.011 V/m; Power Drift = -0.02 dB

Peak SAR (extrapolated) = 8.38 mW/g

SAR(1 g) = 5.16 mW/g; SAR(10 g) = 2.49 mW/g

Maximum value of SAR (measured) = 7.02 mW/g

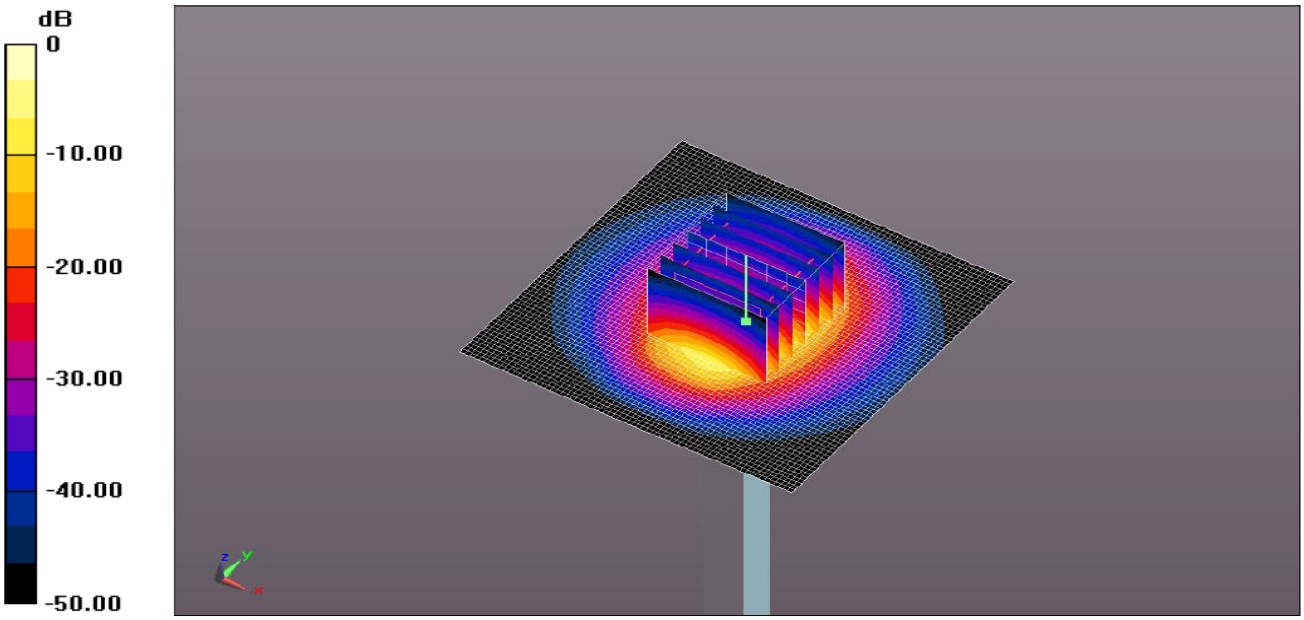

0 dB = 7.02 mW/g = 8.46 dB mW/g

System Performance Check 2450MHz Body 100mW

System Performance Check at 750 MHz Body TSL

DUT: Dipole 750 MHz; Type: D750V3; Serial: 1163

Date/Time: 09/26/2017 08:44:27 AM

Communication System: DuiJiangJi; Frequency: 750 MHz;Duty Cycle: 1:1

Medium parameters used (interpolated): f = 750 MHz; σ = 0.98 S/m; ε_r = 56.91; ρ = 1000 kg/m^3

Phantom section: Flat Section

DASY5 Configuration:

Probe: EX3DV4 – SN3842; ConvF(9.31, 9.31, 9.31); Calibrated: 08/15/2017;

Sensor-Surface: 2mm (Mechanical Surface Detection)

Electronics: DAE4 Sn1315; Calibrated: 08/15/2017

Phantom: ELI 4.0; Type: QDOVA001BA;

Measurement SW: DASY52, Version 52.8 (2); SEMCAD X Version 14.6.6 (6824)

System Performance Check at 750MHz/Area Scan (61x111x1): Interpolated grid: dx=1.50 mm, dy=1.50 mm

Maximum value of SAR (interpolated) = 0.962 mW/g

System Performance Check at 750MHz/Zoom Scan (7x7x7)/Cube 0: Measurement grid: dx=5mm, dy=5mm, dz=5mm

Reference Value = 35.787 V/m; Power Drift = 0.01 dB

Peak SAR (extrapolated) = 1.21 mW/g

SAR(1 g) = 0.841 mW/g; SAR(10 g) = 0.588 mW/g

Maximum value of SAR (measured) = 1.16 mW/g

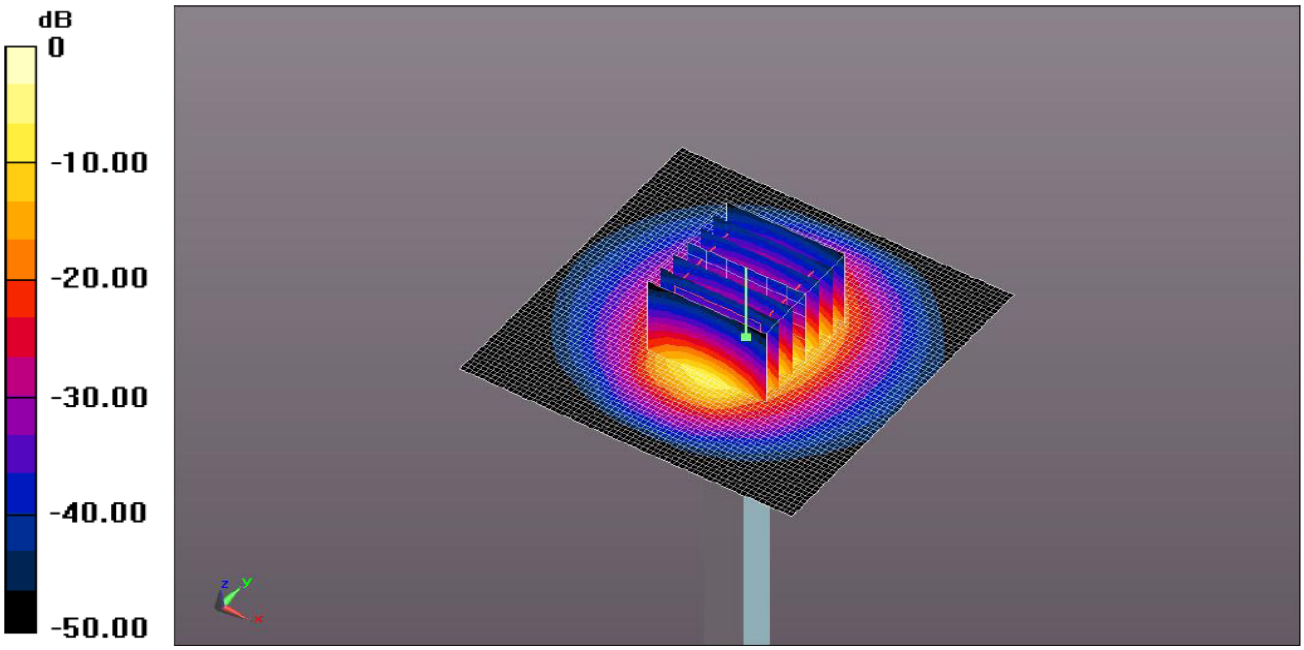

0 dB = 1.16 mW/g = 0.64 dB mW/g

System Performance Check 750MHz Body 100mW

System Performance Check at 2600 MHz Body TSL

DUT: Dipole 2600 MHz; Type: D2600V2; Serial: 1120

Date/Time: 09/25/2017 09:34:11 AM

Communication System: DuiJiangJi; Frequency: 2600 MHz;Duty Cycle: 1:1

Medium parameters used (interpolated): f = 2600 MHz; σ = 2.19 S/m; ε_r = 53.13; ρ = 1000 kg/m^3

Phantom section: Flat Section

DASY5 Configuration:

Probe: EX3DV4 – SN3842; ConvF(6.97, 6.97, 6.97); Calibrated: 08/15/2017;

Sensor-Surface: 2mm (Mechanical Surface Detection)

Electronics: DAE4 Sn1315; Calibrated: 08/15/2017

Phantom: ELI 4.0; Type: QDOVA001BA;

Measurement SW: DASY52, Version 52.8 (2); SEMCAD X Version 14.6.6 (6824)

System Performance Check at 2600MHz/Area Scan (61x111x1): Interpolated grid: dx=1.50 mm, dy=1.50 mm

Maximum value of SAR (interpolated) = 7.22 mW/g

System Performance Check at 2600MHz/Zoom Scan (7x7x7)/Cube 0: Measurement grid: dx=5mm, dy=5mm, dz=5mm

Reference Value = 68.173 V/m; Power Drift = 0.03 dB

Peak SAR (extrapolated) = 7.63 mW/g

SAR(1 g) = 5.08 mW/g; SAR(10 g) = 2.23 mW/g

Maximum value of SAR (measured) = 7.12 mW/g

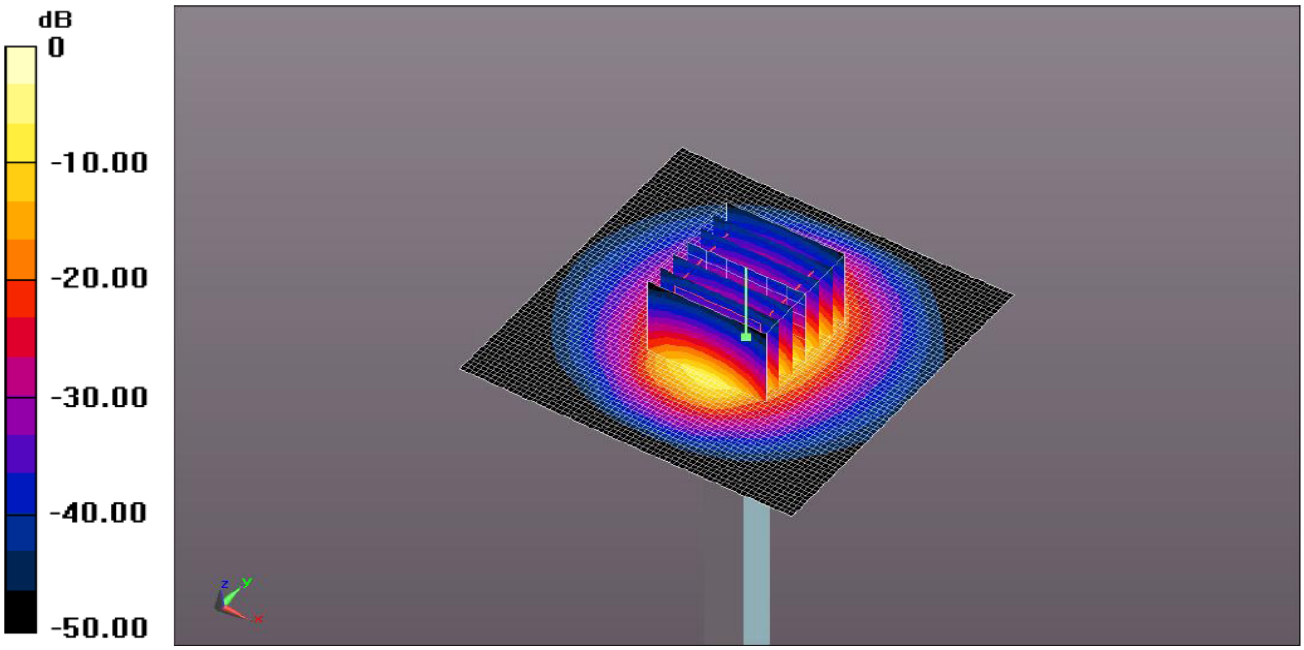

0 dB =7.12 mW/g = 8.52 dB mW/g

System Performance Check 2600MHz Body 100mW

7. SAR Test Graph Results

SAR plots for **the highest measured SAR** in each exposure configuration, wireless mode and frequency band combination according to FCC KDB 865664 D02

Body worn GSM850 GPRS <2TX Slot>, Back side, Middle Channel, 836.60 MHz

Communication System: GPRS 850; Frequency: 836.6 MHz; Duty Cycle:1:4

Medium parameters used (interpolated): f = 837.0 MHz; σ = 0.98 S/m; ε_r = 56.75; ρ = 1000 kg/m^3

Phantom section: Flat Section

Probe: EX3DV4 – SN3842; ConvF(9.02, 9.02, 9.02); Calibrated: 08/15/2017;

Sensor-Surface: 2mm (Mechanical Surface Detection)

Electronics: DAE4 Sn1315; Calibrated: 08/15/2017

Phantom: ELI 4.0; Type: QDOVA001BA;

Measurement SW: DASY52, Version 52.8 (2); SEMCAD X Version 14.6.6 (6824)

Back Side 836.60 MHz/Area Scan (101x181x1): Interpolated grid: dx=1.50 mm, dy=1.50 mm

Maximum value of SAR (interpolated) = 0.722 W/kg

Back Side 836.60 MHz /Zoom Scan (5x5x7)/Cube 0: Measurement grid: dx=8mm, dy=8mm, dz=5mm

Reference Value = 27.514 V/m; Power Drift = -0.02 dB

Peak SAR (extrapolated) = 0.945 W/kg

SAR(1 g) = 0.555 W/kg; SAR(10 g) = 0.321 W/kg

Maximum value of SAR (measured) = 0.738 W/kg

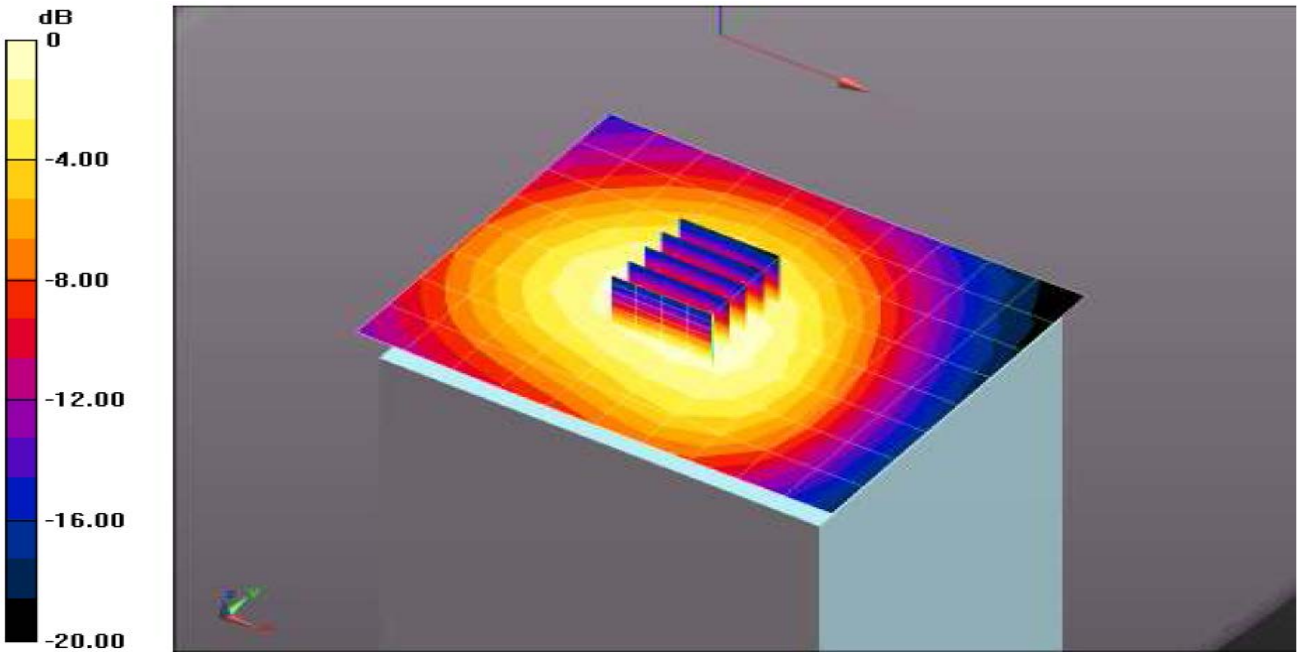

0 dB = 0.738 W/kg = -1.32 dB W/kg

Date/Time: 09/22/2017 09:47:13 AM

Figure 1: Body worn GSM850 GPRS <2TX Slot>, Back side, Middle Channel, 836.60 MHz

Extremity - GSM850 GPRS <2TX Slot>, Right side, Middle Channel, 836.60 MHz

Communication System: GPRS 850; Frequency: 836.6 MHz; Duty Cycle:1:4

Medium parameters used (interpolated): f = 837.0 MHz; σ = 0.98 S/m; ε_r = 56.75; ρ = 1000 kg/m^3

Phantom section: Flat Section

Probe: EX3DV4 – SN3842; ConvF(9.02, 9.02, 9.02); Calibrated: 08/15/2017;

Sensor-Surface: 2mm (Mechanical Surface Detection)

Electronics: DAE4 Sn1315; Calibrated: 08/15/2017

Phantom: ELI 4.0; Type: QDOVA001BA;

Measurement SW: DASY52, Version 52.8 (2); SEMCAD X Version 14.6.6 (6824)

Right Side 836.60 MHz/Area Scan (101x181x1): Interpolated grid: dx=1.50 mm, dy=1.50 mm

Maximum value of SAR (interpolated) = 3.41 W/kg

Right Side 836.60 MHz /Zoom Scan (5x5x7)/Cube 0: Measurement grid: dx=8mm, dy=8mm, dz=5mm

Reference Value = 54.956 V/m; Power Drift = 0.03 dB

Peak SAR (extrapolated) = 2.65 W/kg

SAR(1 g) = 2.21 W/kg; SAR(10 g) = 1.41 W/kg

Maximum value of SAR (measured) = 2.68 W/kg

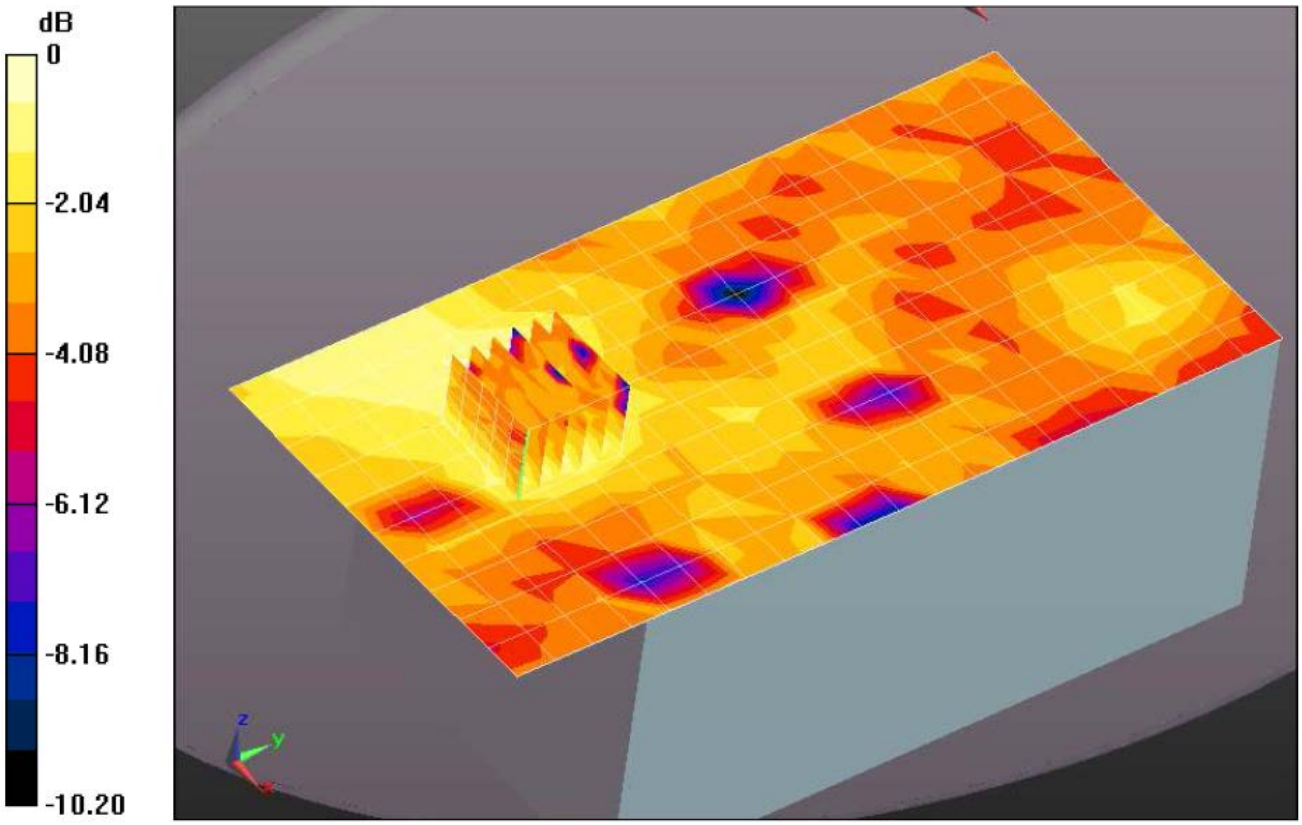

0 dB = 2.68 W/kg = 4.28 dB W/kg

Date/Time: 09/22/2017 14:35:45 PM

Figure 2: Extremity - GSM850 GPRS <2TX Slot>, Right side, Middle Channel, 836.60 MHz

Body worn GSM1900 GPRS <3TX Slot>, Back side, Middle Channel, 1880.00 MHz

Communication System: GPRS 1900; Frequency: 1880.0 MHz; Duty Cycle:1:2.67

Medium parameters used (interpolated): f = 1880.0 MHz; σ = 1.53 S/m; ε_r = 55.98; ρ = 1000 kg/m^3

Phantom section: Flat Section

Probe: EX3DV4 – SN3842; ConvF(7.32, 7.32, 7.32); Calibrated: 08/15/2017;

Sensor-Surface: 2mm (Mechanical Surface Detection)

Electronics: DAE4 Sn1315; Calibrated: 08/15/2017

Phantom: ELI 4.0; Type: QDOVA001BA;

Measurement SW: DASY52, Version 52.8 (2); SEMCAD X Version 14.6.6 (6824)

Back Side 1880.00 MHz/Area Scan (101x181x1): Interpolated grid: dx=1.50 mm, dy=1.50 mm

Maximum value of SAR (interpolated) = 0.532 W/kg

Back Side 1880.00 MHz /Zoom Scan (5x5x7)/Cube 0: Measurement grid: dx=8mm, dy=8mm, dz=5mm

Reference Value = 9.238 V/m; Power Drift = -0.04 dB

Peak SAR (extrapolated) = 0.651 W/kg

SAR(1 g) = 0.444 W/kg; SAR(10 g) = 0.285 W/kg

Maximum value of SAR (measured) = 0.548 W/kg

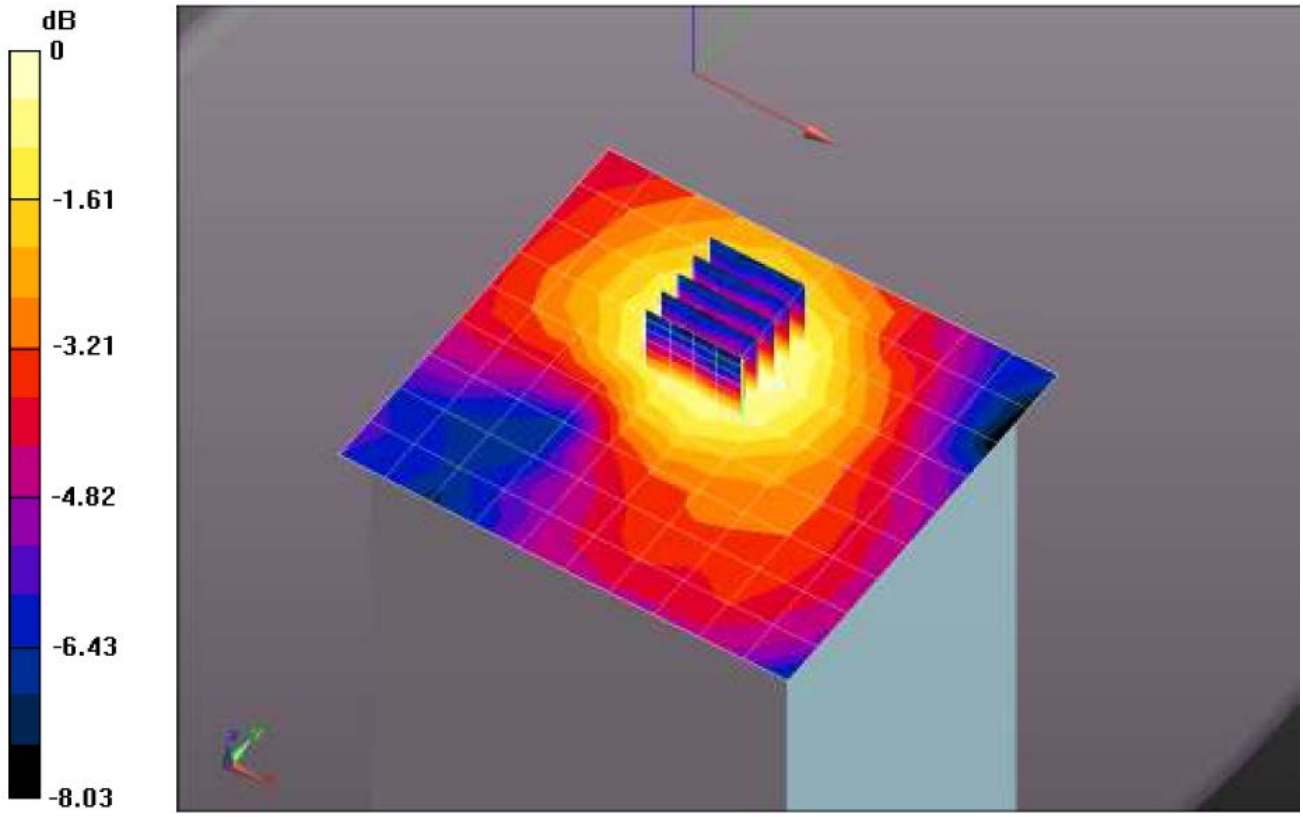

0 dB = 0.548 W/kg = -2.61 dB W/kg

Date/Time: 09/23/2017 10:15:35 AM

Figure 3: Body worn GSM1900 GPRS <3TX Slot>, Back side, Middle Channel, 1880.00 MHz

Extremity – GSM1900 GPRS <3TX Slot>, Right side, Middle Channel, 1880.00 MHz

Communication System: GPRS 1900; Frequency: 1880.0 MHz; Duty Cycle:1:2.67

Medium parameters used (interpolated): f = 1880.0 MHz; σ = 1.53 S/m; ε_r = 55.98; ρ = 1000 kg/m^3

Phantom section: Flat Section

Probe: EX3DV4 – SN3842; ConvF(7.32, 7.32, 7.32); Calibrated: 08/15/2017;

Sensor-Surface: 2mm (Mechanical Surface Detection)

Electronics: DAE4 Sn1315; Calibrated: 08/15/2017

Phantom: ELI 4.0; Type: QDOVA001BA;

Measurement SW: DASY52, Version 52.8 (2); SEMCAD X Version 14.6.6 (6824)

Right Side 1880.00 MHz/Area Scan (101x181x1): Interpolated grid: dx=1.50 mm, dy=1.50 mm

Maximum value of SAR (interpolated) = 1.24 W/kg

Right Side 1880.00 MHz /Zoom Scan (5x5x7)/Cube 0: Measurement grid: dx=8mm, dy=8mm, dz=5mm

Reference Value = 18.078 V/m; Power Drift = -0.01 dB

Peak SAR (extrapolated) = 1.69 W/kg

SAR(1 g) = 1.10 W/kg; SAR(10 g) = 0.574 W/kg

Maximum value of SAR (measured) = 1.53 W/kg

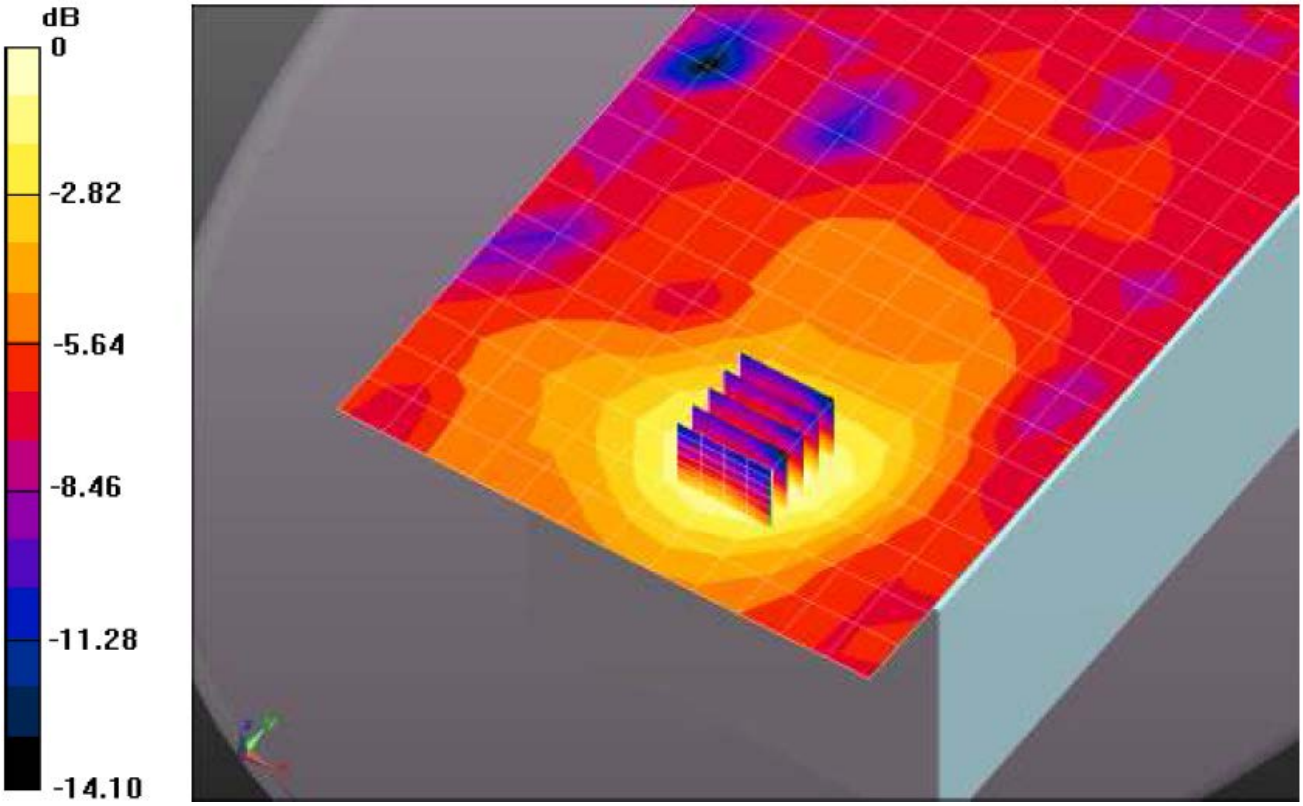

0 dB = 1.53 W/kg = 1.85 dB W/kg

Date/Time: 09/23/2017 14:26:14 PM

Figure 4: Extremity – GSM1900 GPRS <3TX Slot>, Right side, Middle Channel, 1880.00 MHz

Body worn UMTS Band V, Back side, Middle Channel, 836.60 MHz

Communication System: UMTS Band V; Frequency: 836.6 MHz; Duty Cycle:1:1

Medium parameters used (interpolated): f = 837.0 MHz; σ = 0.98 S/m; ε_r = 56.75; ρ = 1000 kg/m^3

Phantom section: Flat Section

Probe: EX3DV4 – SN3842; ConvF(9.02, 9.02, 9.02); Calibrated: 08/15/2017;

Sensor-Surface: 2mm (Mechanical Surface Detection)

Electronics: DAE4 Sn1315; Calibrated: 08/15/2017

Phantom: ELI 4.0; Type: QDOVA001BA;

Measurement SW: DASY52, Version 52.8 (2); SEMCAD X Version 14.6.6 (6824)

Back Side 836.60 MHz/Area Scan (101x181x1): Interpolated grid: dx=1.50 mm, dy=1.50 mm

Maximum value of SAR (interpolated) = 0.685 W/kg

Back Side 836.60 MHz /Zoom Scan (5x5x7)/Cube 0: Measurement grid: dx=8mm, dy=8mm, dz=5mm

Reference Value = 27.047 V/m; Power Drift = 0.08 dB

Peak SAR (extrapolated) = 0.912 W/kg

SAR(1 g) = 0.496 W/kg; SAR(10 g) = 0.306 W/kg

Maximum value of SAR (measured) = 0.708 W/kg

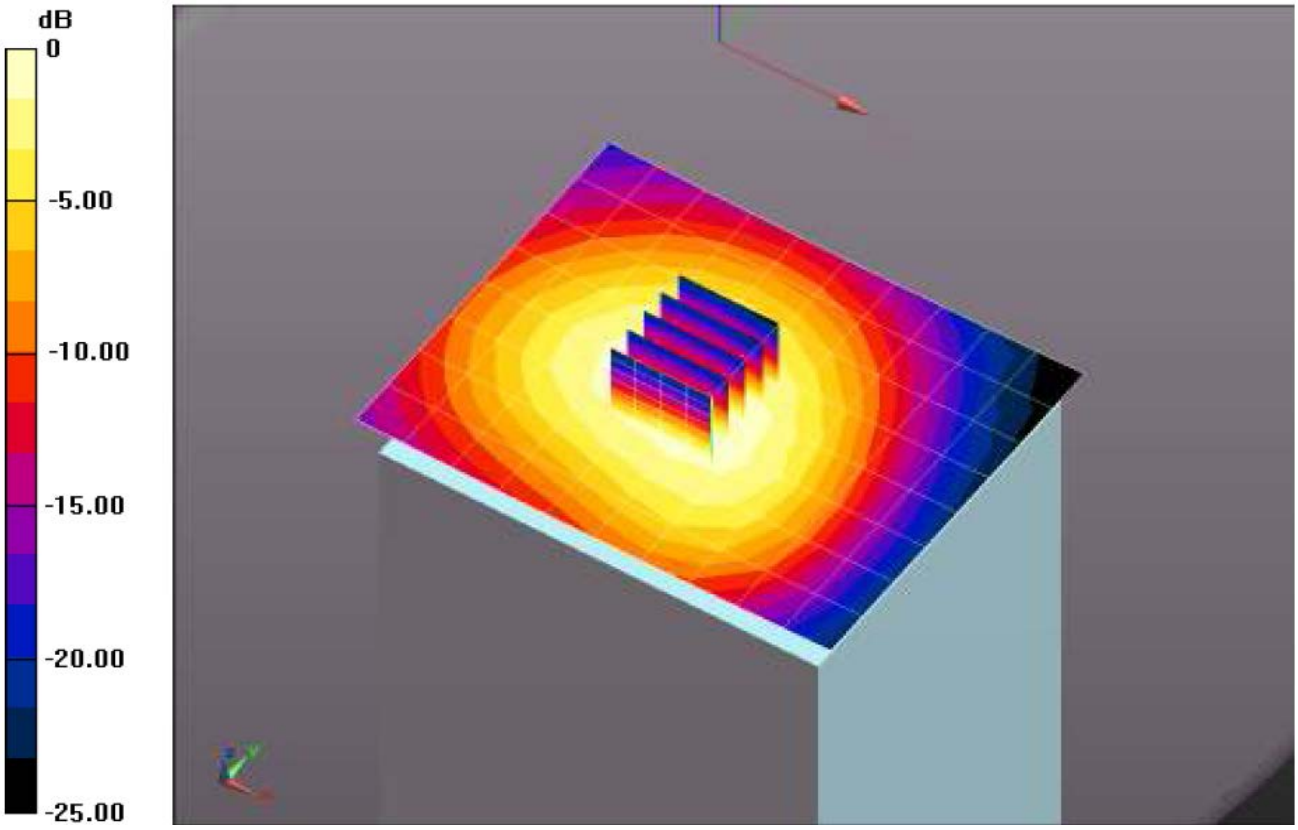

0 dB = 0.708 W/kg = -1.50 dB W/kg

Date/Time: 09/22/2017 10:55:41 AM

Figure 5: Body worn UMTS Band V, Back side, Middle Channel, 836.60 MHz

Extremity - UMTS Band V, Right side, Middle Channel, 836.60 MHz

Communication System: UMTS Band V; Frequency: 836.6 MHz; Duty Cycle:1:1

Medium parameters used (interpolated): f = 837.0 MHz; σ = 0.98 S/m; ε_r = 56.75; ρ = 1000 kg/m^3

Phantom section: Flat Section

Probe: EX3DV4 – SN3842; ConvF(9.02, 9.02, 9.02); Calibrated: 08/15/2017;

Sensor-Surface: 2mm (Mechanical Surface Detection)

Electronics: DAE4 Sn1315; Calibrated: 08/15/2017

Phantom: ELI 4.0; Type: QDOVA001BA;

Measurement SW: DASY52, Version 52.8 (2); SEMCAD X Version 14.6.6 (6824)

Right Side 836.60 MHz/Area Scan (101x181x1): Interpolated grid: dx=1.50 mm, dy=1.50 mm

Maximum value of SAR (interpolated) = 2.61 W/kg

Right Side 836.60 MHz /Zoom Scan (5x5x7)/Cube 0: Measurement grid: dx=8mm, dy=8mm, dz=5mm

Reference Value = 53.479 V/m; Power Drift = -0.12 dB

Peak SAR (extrapolated) = 3.36 W/kg

SAR(1 g) = 2.08 W/kg; SAR(10 g) = 1.24 W/kg

Maximum value of SAR (measured) = 2.14 W/kg

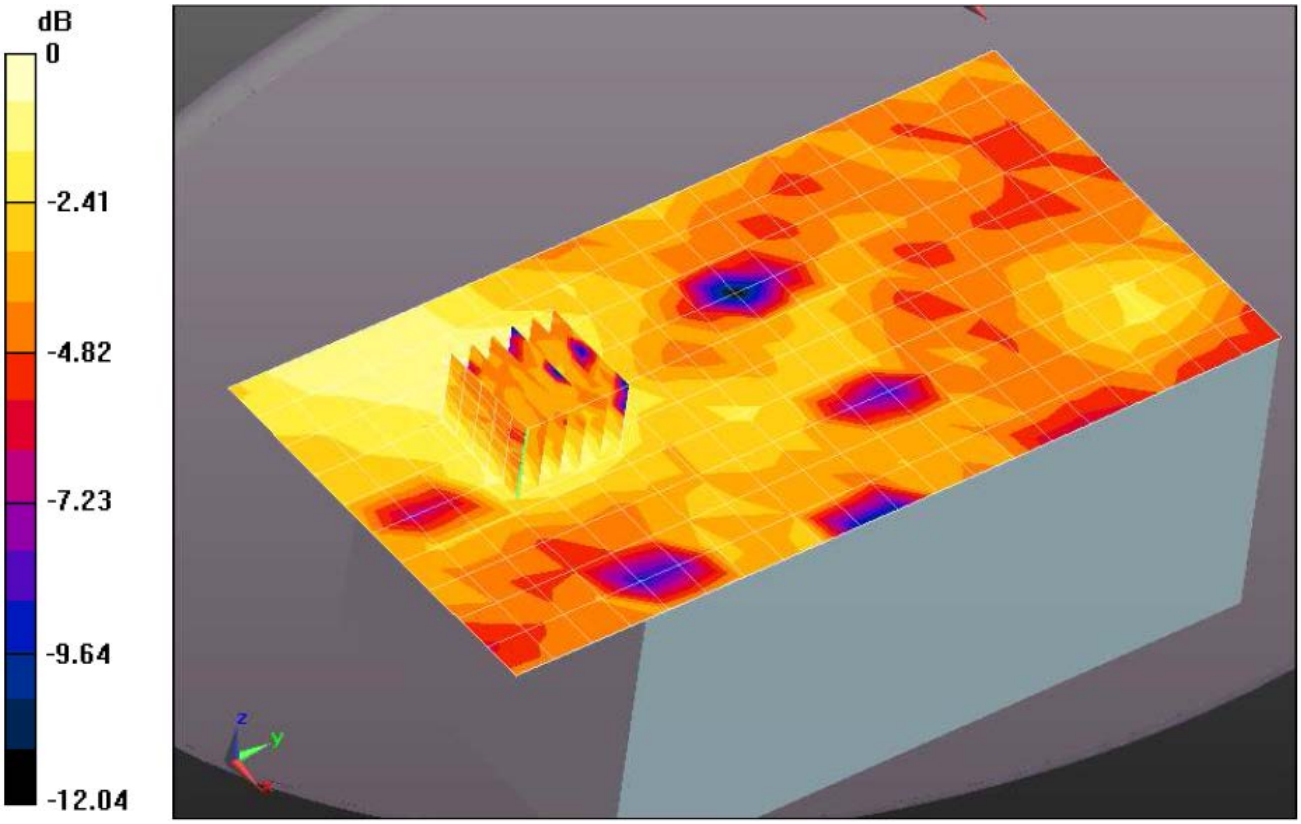

0 dB = 2.14 W/kg = 3.30 dB W/kg

Date/Time: 09/22/2017 15:14:09 PM

Figure 6: Extremity - UMTS Band V, Right side, Middle Channel, 836.60 MHz

Body worn UMTS Band II, Back side, Middle Channel, 1880.00 MHz

Communication System: UMTS Band II; Frequency: 1880.0 MHz; Duty Cycle:1:1

Medium parameters used (interpolated): f = 1880.0 MHz; σ = 1.53 S/m; ε_r = 55.98; ρ = 1000 kg/m^3

Phantom section: Flat Section

Probe: EX3DV4 – SN3842; ConvF(7.32, 7.32, 7.32); Calibrated: 08/15/2017;

Sensor-Surface: 2mm (Mechanical Surface Detection)

Electronics: DAE4 Sn1315; Calibrated: 08/15/2017

Phantom: ELI 4.0; Type: QDOVA001BA;

Measurement SW: DASY52, Version 52.8 (2); SEMCAD X Version 14.6.6 (6824)

Back Side 1880.00 MHz/Area Scan (101x181x1): Interpolated grid: dx=1.50 mm, dy=1.50 mm

Maximum value of SAR (interpolated) = 0.532 W/kg

Back Side 1880.00 MHz /Zoom Scan (5x5x7)/Cube 0: Measurement grid: dx=8mm, dy=8mm, dz=5mm

Reference Value = 9.244 V/m; Power Drift = 0.12 dB

Peak SAR (extrapolated) = 0.648 W/kg

SAR(1 g) = 0.459 W/kg; SAR(10 g) = 0.289 W/kg

Maximum value of SAR (measured) = 0.566 W/kg

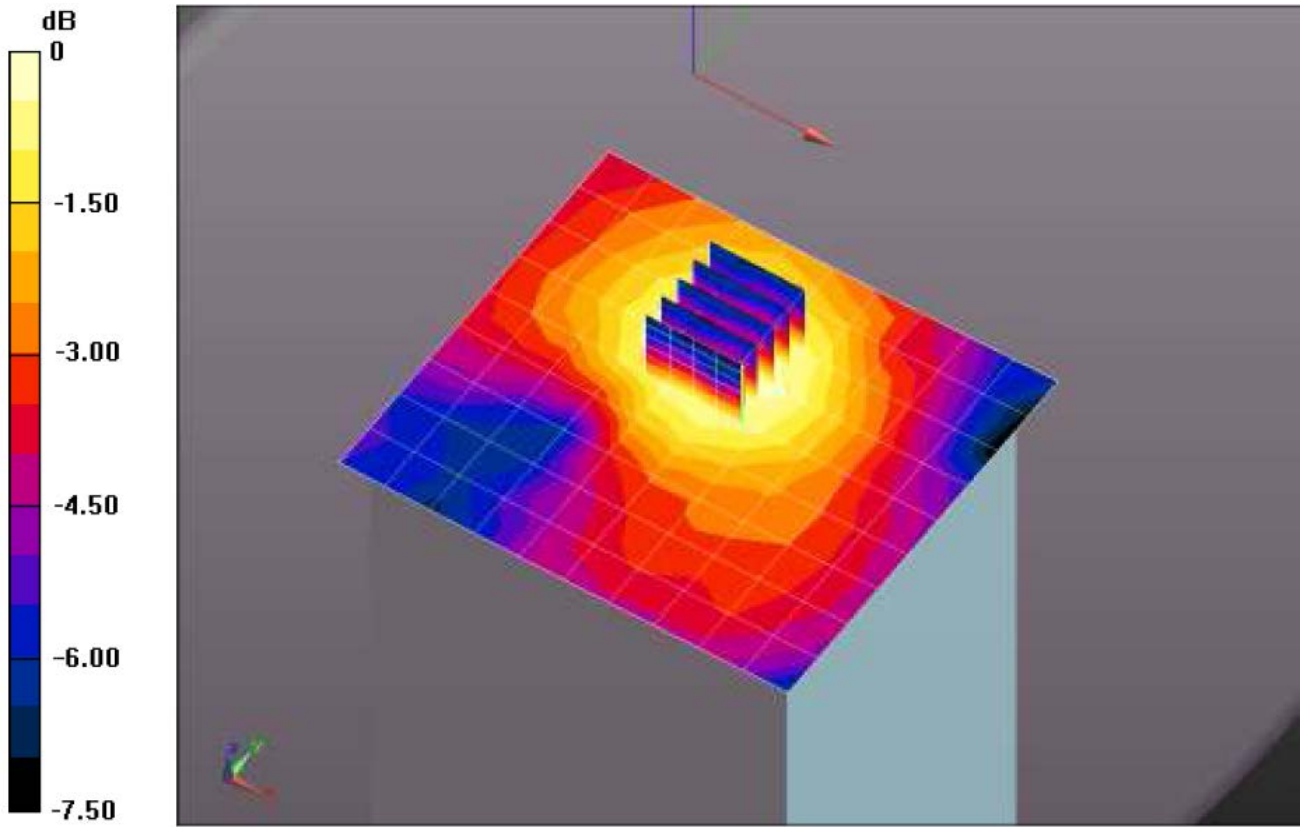

0 dB = 0.566 W/kg = -2.47 dB W/kg

Date/Time: 09/23/2017 11:35:24 AM

Figure 7: Body worn UMTS Band II, Back side, Middle Channel, 1880.00 MHz

Extremity – UMTS Band II, Right side, Middle Channel, 1880.00 MHz

Communication System: UMTS Band II; Frequency: 1880.0 MHz; Duty Cycle:1:1

Medium parameters used (interpolated): f = 1880.0 MHz; σ = 1.53 S/m; ε_r = 55.98; ρ = 1000 kg/m^3

Phantom section: Flat Section

Probe: EX3DV4 – SN3842; ConvF(7.32, 7.32, 7.32); Calibrated: 08/15/2017;

Sensor-Surface: 2mm (Mechanical Surface Detection)

Electronics: DAE4 Sn1315; Calibrated: 08/15/2017

Phantom: ELI 4.0; Type: QDOVA001BA;

Measurement SW: DASY52, Version 52.8 (2); SEMCAD X Version 14.6.6 (6824)

Right Side 1880.00 MHz/Area Scan (101x181x1): Interpolated grid: dx=1.50 mm, dy=1.50 mm

Maximum value of SAR (interpolated) = 1.31 W/kg

Right Side 1880.00 MHz /Zoom Scan (5x5x7)/Cube 0: Measurement grid: dx=8mm, dy=8mm, dz=5mm

Reference Value = 21.816 V/m; Power Drift = 0.00 dB

Peak SAR (extrapolated) = 1.78 W/kg

SAR(1 g) = 1.13 W/kg; SAR(10 g) = 0.743 W/kg

Maximum value of SAR (measured) = 1.36 W/kg

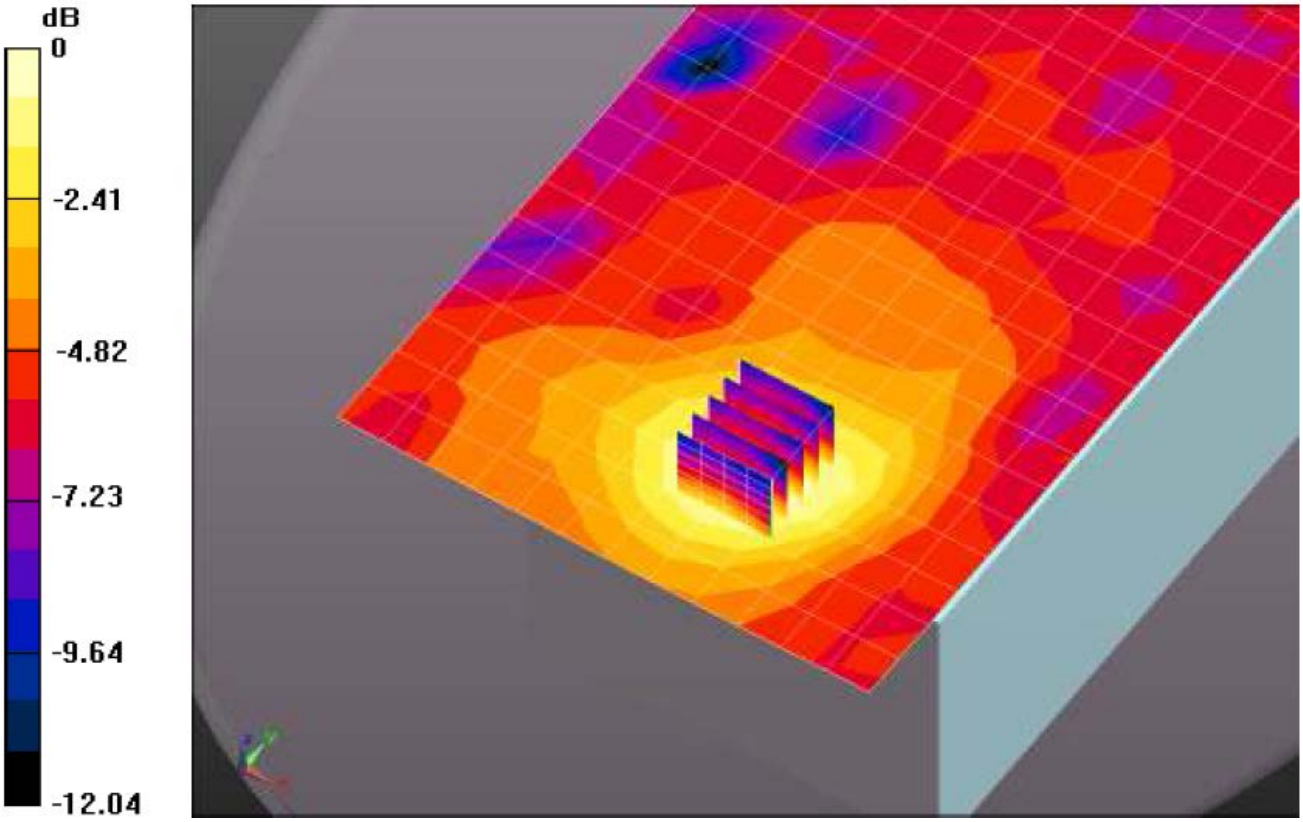

0 dB = 1.53 W/kg = 1.85 dB W/kg

Date/Time: 09/23/2017 15:35:24 PM

Figure 8: Extremity – UMTS Band II, Right side, Middle Channel, 1880.00 MHz

Body worn LTE Band 2 <1RB>, Back side, Low Channel, 1860.00 MHz

Communication System: LTE Band 2; Frequency: 1860.0 MHz; Duty Cycle:1:1

Medium parameters used (interpolated): f = 1860.0 MHz; σ = 1.52 S/m; ε_r = 55.14; ρ = 1000 kg/m^3

Phantom section: Flat Section

Probe: EX3DV4 – SN3842; ConvF(7.32, 7.32, 7.32); Calibrated: 08/15/2017;

Sensor-Surface: 2mm (Mechanical Surface Detection)

Electronics: DAE4 Sn1315; Calibrated: 08/15/2017

Phantom: ELI 4.0; Type: QDOVA001BA;

Measurement SW: DASY52, Version 52.8 (2); SEMCAD X Version 14.6.6 (6824)

Back Side 1880.00 MHz/Area Scan (101x181x1): Interpolated grid: dx=1.50 mm, dy=1.50 mm

Maximum value of SAR (interpolated) = 0.712 W/kg

Back Side 1880.00 MHz /Zoom Scan (5x5x7)/Cube 0: Measurement grid: dx=8mm, dy=8mm, dz=5mm

Reference Value = 9.879 V/m; Power Drift = -0.05 dB

Peak SAR (extrapolated) = 0.842 W/kg

SAR(1 g) = 0.575 W/kg; SAR(10 g) = 0.364 W/kg

Maximum value of SAR (measured) = 0.702 W/kg

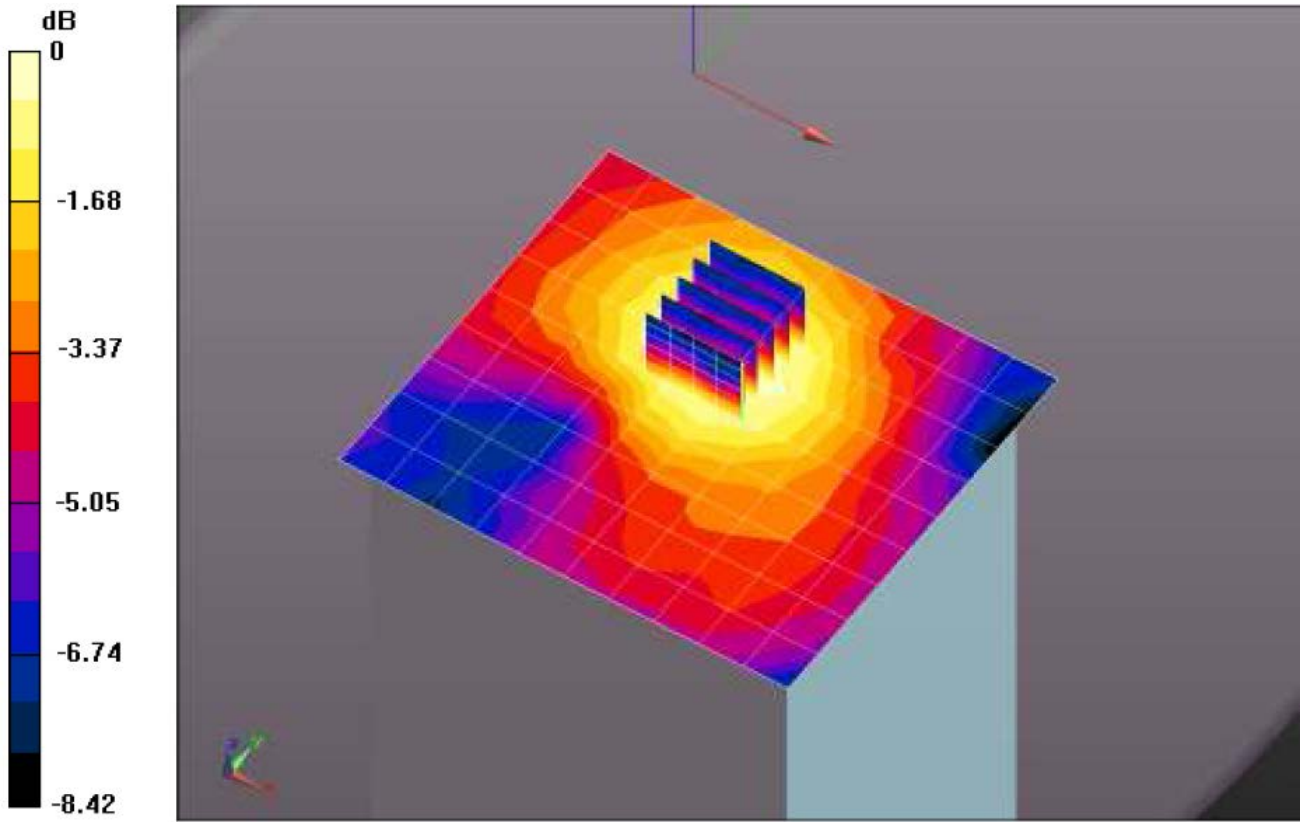

0 dB = 0.702 W/kg = -1.54 dB W/kg

Date/Time: 09/23/2017 12:01:11 PM

Figure 9: Body worn LTE Band 2 <1RB>, Back side, Low Channel, 1860.00 MHz

Extremity – LTE Band 2 <1RB>, Right side, Low Channel, 1860.00 MHz

Communication System: LTE Band 2; Frequency: 1860.0 MHz; Duty Cycle:1:1

Medium parameters used (interpolated): f = 1860.0 MHz; σ = 1.52 S/m; ε_r = 55.14; ρ = 1000 kg/m^3

Phantom section: Flat Section

Probe: EX3DV4 – SN3842; ConvF(7.32, 7.32, 7.32); Calibrated: 08/15/2017;

Sensor-Surface: 2mm (Mechanical Surface Detection)

Electronics: DAE4 Sn1315; Calibrated: 08/15/2017

Phantom: ELI 4.0; Type: QDOVA001BA;

Measurement SW: DASY52, Version 52.8 (2); SEMCAD X Version 14.6.6 (6824)

Right Side 1880.00 MHz/Area Scan (101x181x1): Interpolated grid: dx=1.50 mm, dy=1.50 mm

Maximum value of SAR (interpolated) = 1.62 W/kg

Right Side 1880.00 MHz /Zoom Scan (5x5x7)/Cube 0: Measurement grid: dx=8mm, dy=8mm, dz=5mm

Reference Value = 22.022 V/m; Power Drift = 0.02 dB

Peak SAR (extrapolated) = 1.85 W/kg

SAR(1 g) = 1.22 W/kg; SAR(10 g) = 0.761 W/kg

Maximum value of SAR (measured) = 1.44 W/kg

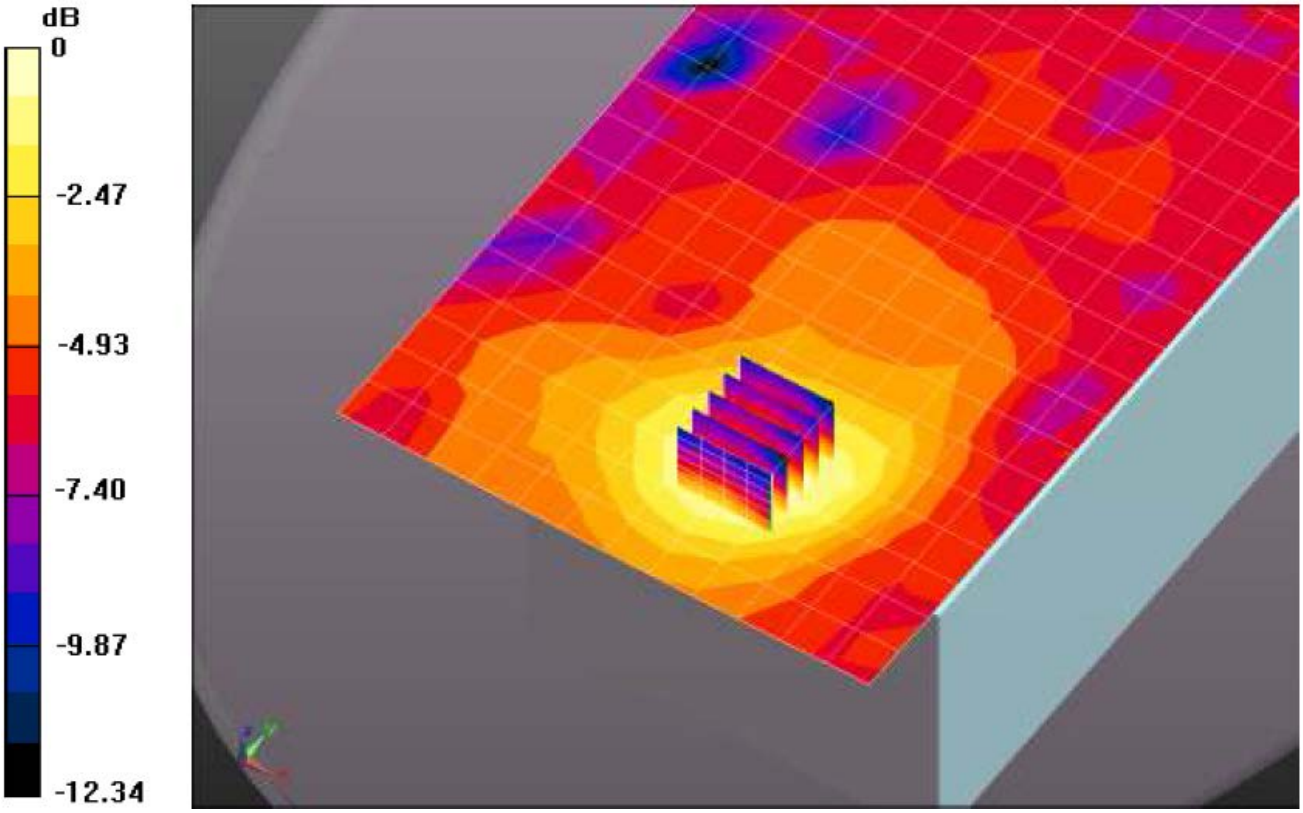

0 dB = 1.44 W/kg = 1.58 dB W/kg

Date/Time: 09/23/2017 18:01:36 PM

Figure 10: Extremity – LTE Band 2 <1RB>, Right side, Low Channel, 1860.00 MHz

Body worn LTE Band 5 <1RB>, Back side, Middle Channel, 836.60 MHz

Communication System: LTE Band 5; Frequency: 836.6 MHz; Duty Cycle:1:1

Medium parameters used (interpolated): f = 837.0 MHz; σ = 0.98 S/m; ε_r = 56.75; ρ = 1000 kg/m^3

Phantom section: Flat Section

Probe: EX3DV4 – SN3842; ConvF(9.02, 9.02, 9.02); Calibrated: 08/15/2017;

Sensor-Surface: 2mm (Mechanical Surface Detection)

Electronics: DAE4 Sn1315; Calibrated: 08/15/2017

Phantom: ELI 4.0; Type: QDOVA001BA;

Measurement SW: DASY52, Version 52.8 (2); SEMCAD X Version 14.6.6 (6824)

Back Side 836.60 MHz/Area Scan (101x181x1): Interpolated grid: dx=1.50 mm, dy=1.50 mm

Maximum value of SAR (interpolated) = 1.26 W/kg

Back Side 836.60 MHz /Zoom Scan (5x5x7)/Cube 0: Measurement grid: dx=8mm, dy=8mm, dz=5mm

Reference Value = 30.898 V/m; Power Drift = 0.02 dB

Peak SAR (extrapolated) = 1.78 W/kg

SAR(1 g) = 1.04 W/kg; SAR(10 g) = 0.584 W/kg

Maximum value of SAR (measured) = 1.35 W/kg

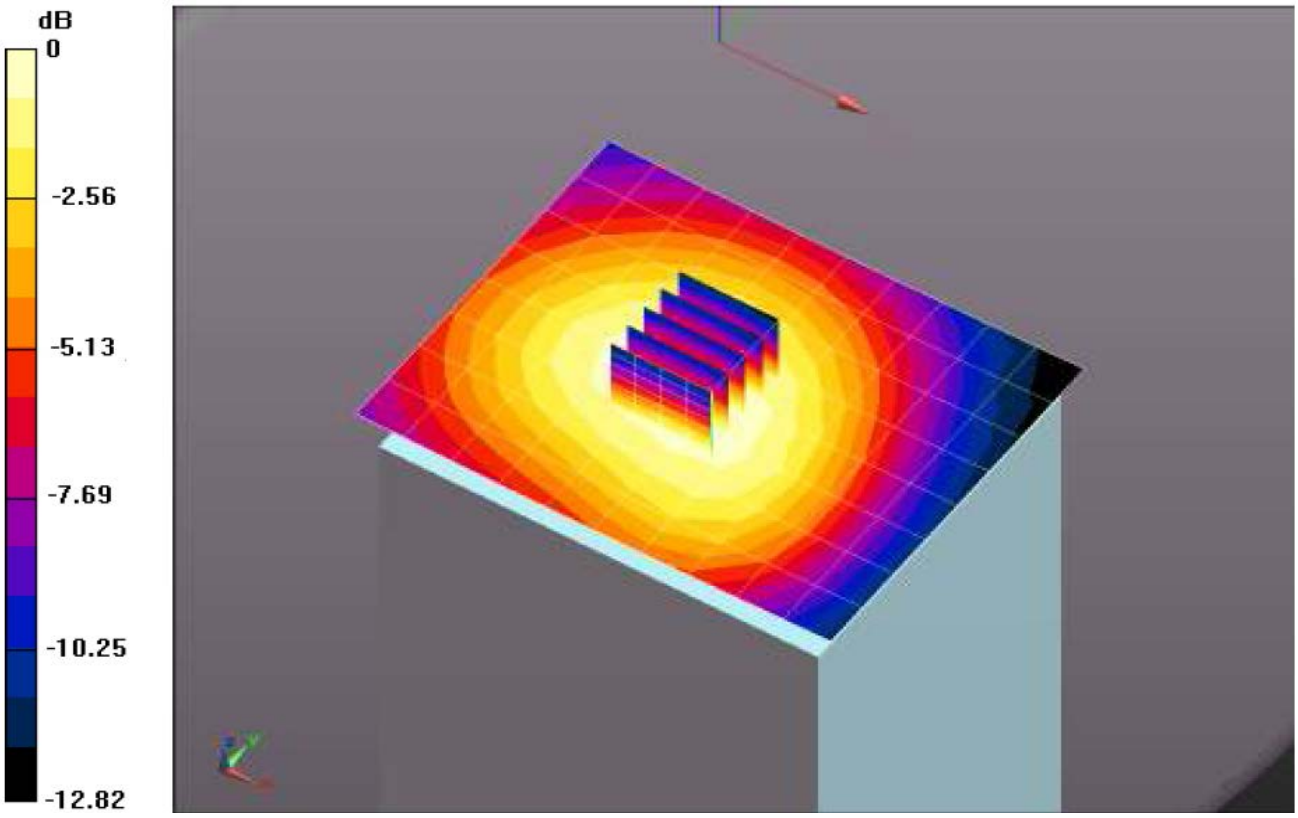

0 dB = 1.35 W/kg = 1.31 dB W/kg

Date/Time: 09/22/2017 12:15:22 PM

Figure 11: Body worn LTE Band 5 <1RB>, Back side, Middle Channel, 836.60 MHz

Extremity – LTE Band 5 <1RB>, Right side, Middle Channel, 836.60 MHz

Communication System: LTE Band 5; Frequency: 836.6 MHz; Duty Cycle:1:1

Medium parameters used (interpolated): f = 837.0 MHz; σ = 0.98 S/m; ε_r = 56.75; ρ = 1000 kg/m^3

Phantom section: Flat Section

Probe: EX3DV4 – SN3842; ConvF(9.02, 9.02, 9.02); Calibrated: 08/15/2017;

Sensor-Surface: 2mm (Mechanical Surface Detection)

Electronics: DAE4 Sn1315; Calibrated: 08/15/2017

Phantom: ELI 4.0; Type: QDOVA001BA;

Measurement SW: DASY52, Version 52.8 (2); SEMCAD X Version 14.6.6 (6824)

Right Side 836.60 MHz/Area Scan (101x181x1): Interpolated grid: dx=1.50 mm, dy=1.50 mm

Maximum value of SAR (interpolated) = 2.51 W/kg

Right Side 836.60 MHz /Zoom Scan (5x5x7)/Cube 0: Measurement grid: dx=8mm, dy=8mm, dz=5mm

Reference Value = 54.233 V/m; Power Drift = 0.03 dB

Peak SAR (extrapolated) = 3.31 W/kg

SAR(1 g) = 2.15 W/kg; SAR(10 g) = 1.37 W/kg

Maximum value of SAR (measured) = 2.60 W/kg

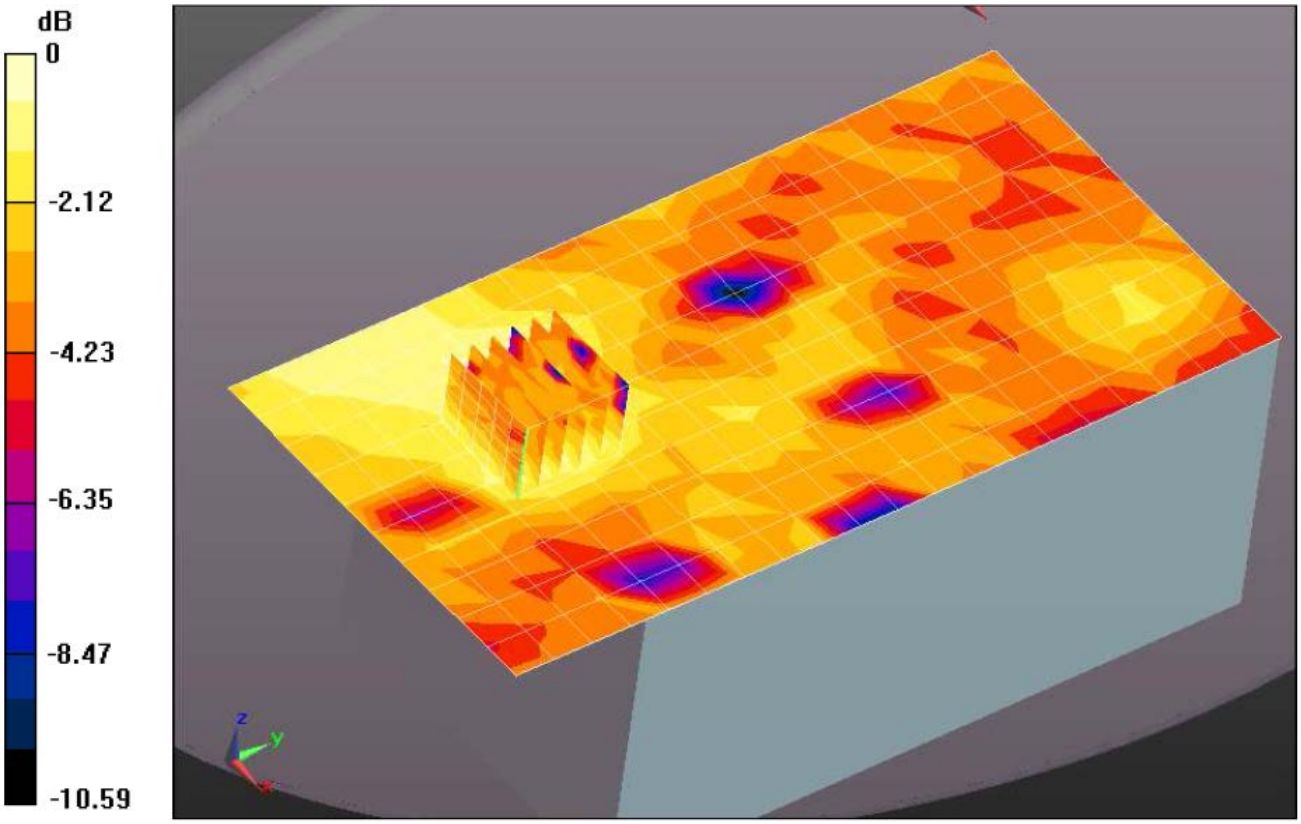

0 dB = 2.60 W/kg = 4.15 dB W/kg

Date/Time: 09/22/2017 17:46:22 PM

Figure 12: Extremity – LTE Band 5 <1RB>, Right side, Middle Channel, 836.60 MHz

Body worn LTE Band 7 <1RB>, Back side, Middle Channel, 2535.0 MHz

Communication System: LTE Band 7; Frequency: 2535.0 MHz; Duty Cycle:1:1

Medium parameters used (interpolated): f = 2535.0 MHz; σ = 2.17 S/m; ε_r = 52.45; ρ = 1000 kg/m^3

Phantom section: Flat Section

Probe: EX3DV4 – SN3842; ConvF(6.97, 6.97, 6.97); Calibrated: 08/15/2017;

Sensor-Surface: 2mm (Mechanical Surface Detection)

Electronics: DAE4 Sn1315; Calibrated: 08/15/2017

Phantom: ELI 4.0; Type: QDOVA001BA;

Measurement SW: DASY52, Version 52.8 (2); SEMCAD X Version 14.6.6 (6824)

Back Side 2535.0 MHz/Area Scan (101x181x1): Interpolated grid: dx=1.50 mm, dy=1.50 mm

Maximum value of SAR (interpolated) = 0.761 W/kg

Back Side 2535.0 MHz /Zoom Scan (5x5x7)/Cube 0: Measurement grid: dx=8mm, dy=8mm, dz=5mm

Reference Value = 24.848 V/m; Power Drift = 0.04 dB

Peak SAR (extrapolated) = 1.01 W/kg

SAR(1 g) = 0.669 W/kg; SAR(10 g) = 0.462 W/kg

Maximum value of SAR (measured) = 0.706 W/kg

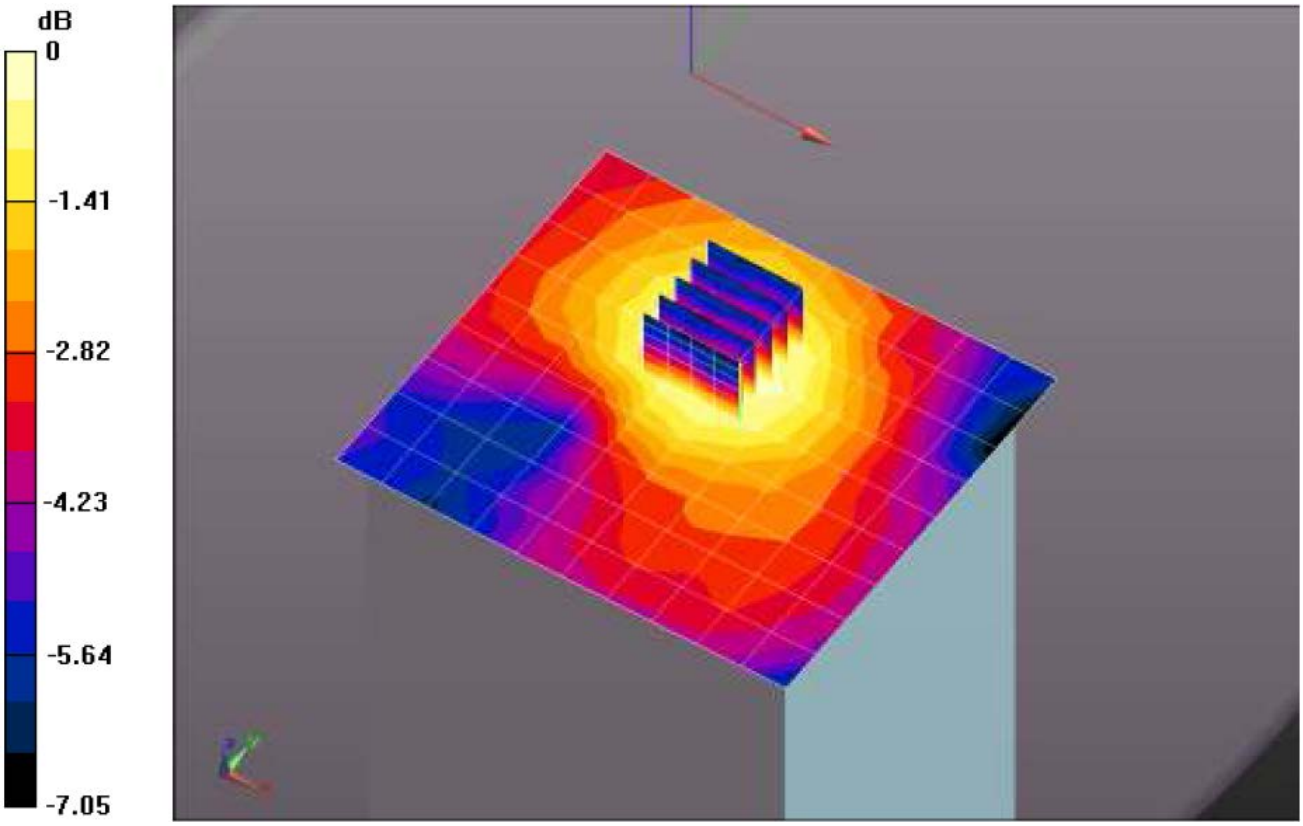

0 dB = 0.706 W/kg = -1.52 dB W/kg

Date/Time: 09/25/2017 11:23:44 AM

Figure 13: Body worn LTE Band 7 <1RB>, Back side, Middle Channel, 2535.0 MHz

Extremity – LTE Band 7 <1RB>, Right side, Middle Channel, 2535.0 MHz

Communication System: LTE Band 7; Frequency: 2535.0 MHz; Duty Cycle:1:1

Medium parameters used (interpolated): f = 2535.0 MHz; σ = 2.17 S/m; ε_r = 52.45; ρ = 1000 kg/m^3

Phantom section: Flat Section

Probe: EX3DV4 – SN3842; ConvF(6.97, 6.97, 6.97); Calibrated: 08/15/2017;

Sensor-Surface: 2mm (Mechanical Surface Detection)

Electronics: DAE4 Sn1315; Calibrated: 08/15/2017

Phantom: ELI 4.0; Type: QDOVA001BA;

Measurement SW: DASY52, Version 52.8 (2); SEMCAD X Version 14.6.6 (6824)

Right Side 2535.0 MHz /Area Scan (101x181x1): Interpolated grid: dx=1.50 mm, dy=1.50 mm

Maximum value of SAR (interpolated) = 5.72 W/kg

Right Side 2535.0 MHz /Zoom Scan (5x5x7)/Cube 0: Measurement grid: dx=8mm, dy=8mm, dz=5mm

Reference Value = 56.237 V/m; Power Drift = -0.12 dB

Peak SAR (extrapolated) = 8.07 W/kg

SAR(1 g) = 3.41 W/kg; SAR(10 g) = 1.87 W/kg

Maximum value of SAR (measured) = 4.79 W/kg

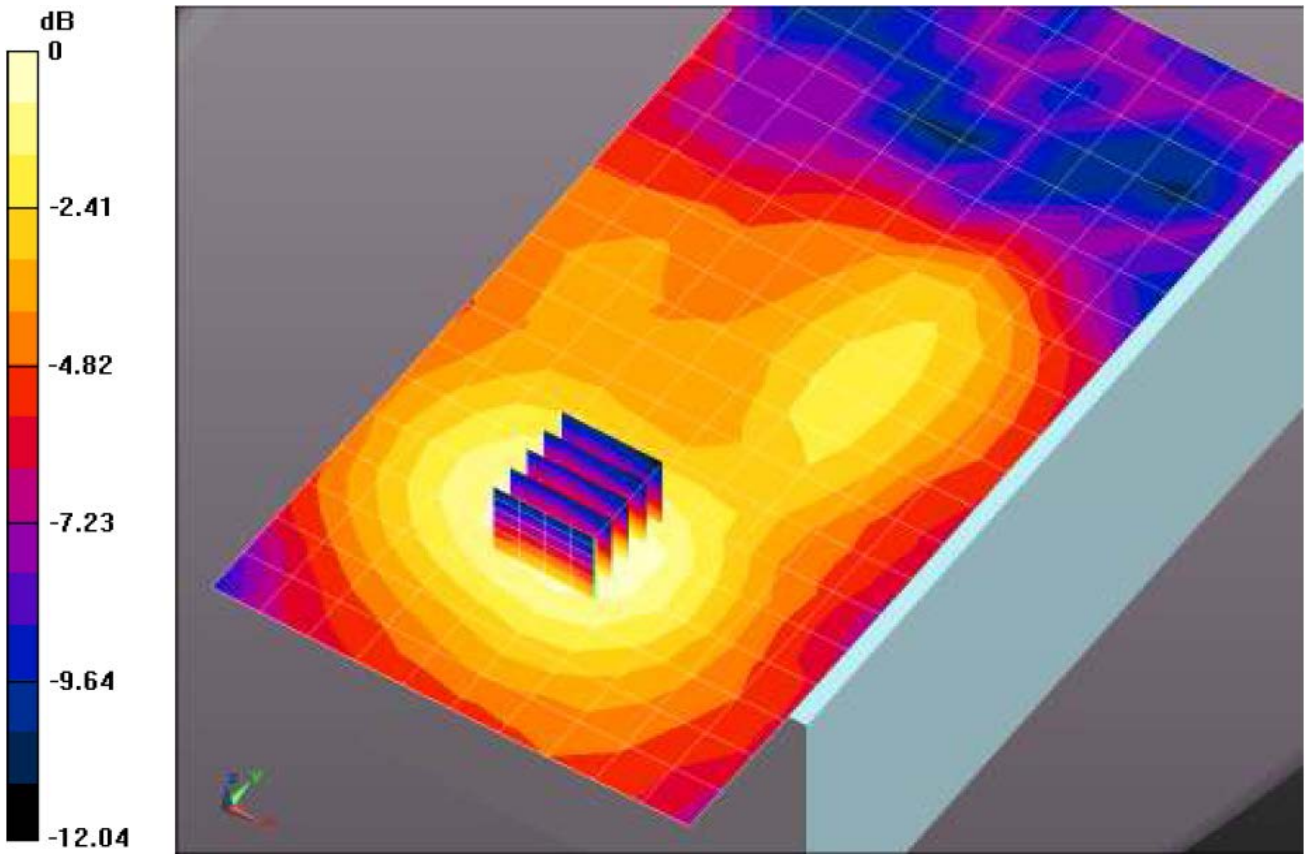

0 dB = 4.79 W/kg = 6.80 dB W/kg

Date/Time: 09/25/2017 14:46:17 PM

Figure 14: Extremity – LTE Band 7 <1RB>, Right side, Middle Channel, 2535.5 MHz

Body worn LTE Band 12 <1RB>, Back side, High Channel, 711.00 MHz

Communication System: LTE Band 12; Frequency: 711.0 MHz; Duty Cycle:1:1

Medium parameters used (interpolated): f = 711.0 MHz; σ = 0.95 S/m; ε_r = 55.85; ρ = 1000 kg/m^3

Phantom section: Flat Section

Probe: EX3DV4 – SN3842; ConvF(9.31, 9.31, 9.31); Calibrated: 08/15/2017;

Sensor-Surface: 2mm (Mechanical Surface Detection)

Electronics: DAE4 Sn1315; Calibrated: 08/15/2017

Phantom: ELI 4.0; Type: QDOVA001BA;

Measurement SW: DASY52, Version 52.8 (2); SEMCAD X Version 14.6.6 (6824)

Back Side 711.00 MHz/Area Scan (101x181x1): Interpolated grid: dx=1.50 mm, dy=1.50 mm

Maximum value of SAR (interpolated) = 0.556 W/kg

Back Side 711.00 MHz /Zoom Scan (5x5x7)/Cube 0: Measurement grid: dx=8mm, dy=8mm, dz=5mm

Reference Value = 13.991 V/m; Power Drift = 0.02 dB

Peak SAR (extrapolated) = 0.812 W/kg

SAR(1 g) = 0.523 W/kg; SAR(10 g) = 0.269 W/kg

Maximum value of SAR (measured) = 0.562 W/kg

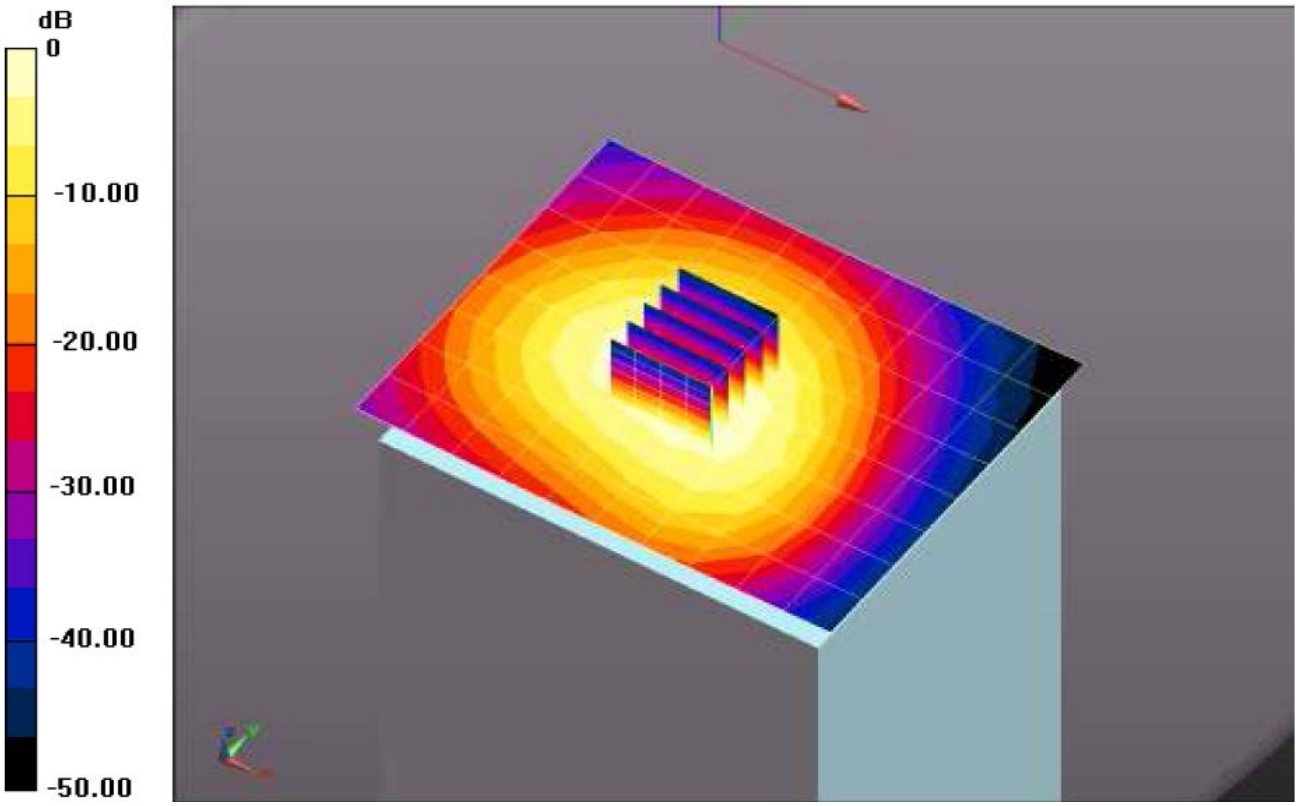

0 dB = 0.562 W/kg = -2.51 dB W/kg

Date/Time: 09/26/2017 11:02:33 PM

Figure 15: Body worn LTE Band 12 <1RB>, Back side, High Channel, 711.00 MHz

Extremity – LTE Band 12 <1RB>, Right side, High Channel, 711.00 MHz

Communication System: LTE Band 12; Frequency: 711.0 MHz; Duty Cycle:1:1

Medium parameters used (interpolated): f = 711.0 MHz; σ = 0.95 S/m; ε_r = 55.85; ρ = 1000 kg/m^3

Phantom section: Flat Section

Probe: EX3DV4 – SN3842; ConvF(9.31, 9.31, 9.31); Calibrated: 08/15/2017;

Sensor-Surface: 2mm (Mechanical Surface Detection)

Electronics: DAE4 Sn1315; Calibrated: 08/15/2017

Phantom: ELI 4.0; Type: QDOVA001BA;

Measurement SW: DASY52, Version 52.8 (2); SEMCAD X Version 14.6.6 (6824)

Right Side 711.00 MHz/Area Scan (101x181x1): Interpolated grid: dx=1.50 mm, dy=1.50 mm

Maximum value of SAR (interpolated) = 4.28 W/kg

Right Side 711.00 MHz /Zoom Scan (5x5x7)/Cube 0: Measurement grid: dx=8mm, dy=8mm, dz=5mm

Reference Value = 57.736 V/m; Power Drift = 0.02 dB

Peak SAR (extrapolated) = 5.88 W/kg

SAR(1 g) = 4.58 W/kg; SAR(10 g) = 1.54 W/kg

Maximum value of SAR (measured) = 4.87 W/kg

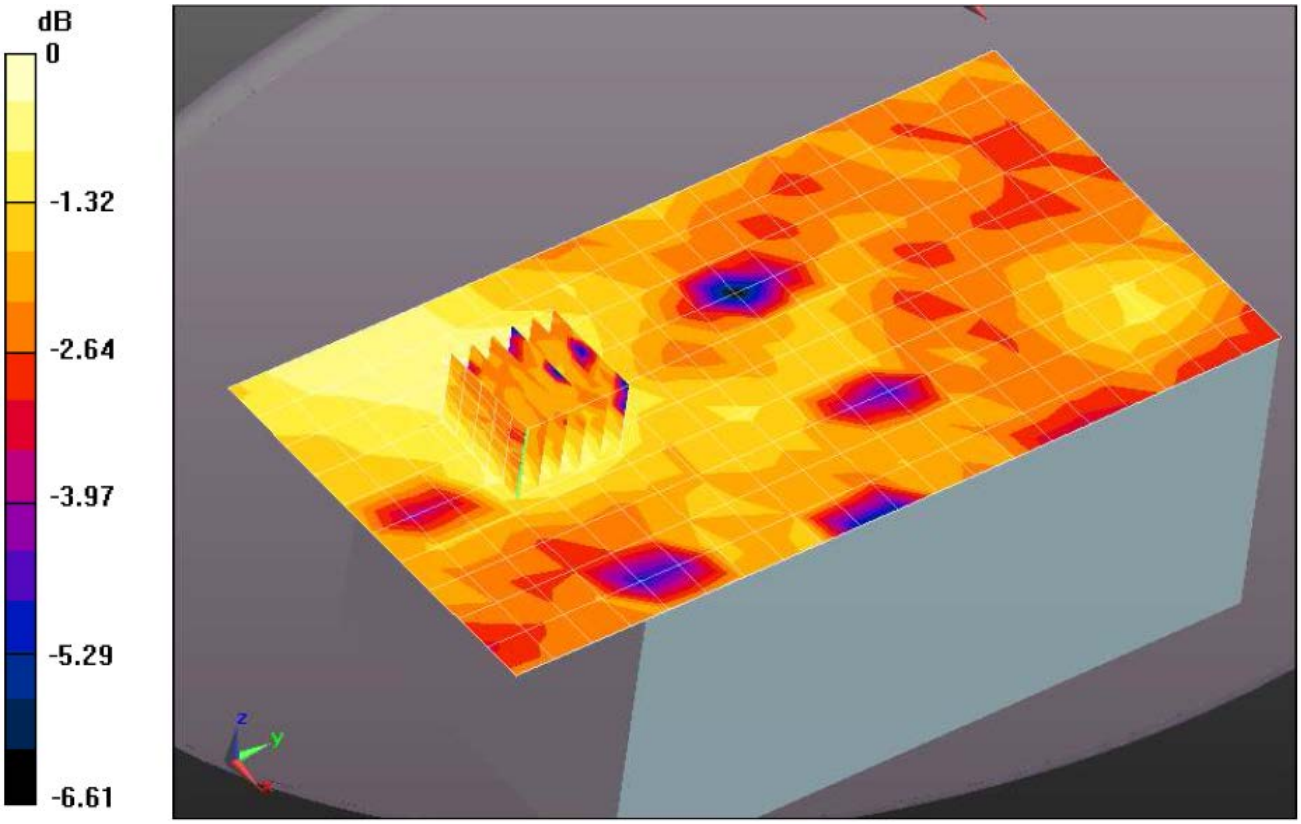

0 dB = 4.87 W/kg = 6.88 dB W/kg

Date/Time: 09/26/2017 14:02:38 PM

Figure 16: Extremity – LTE Band 12 <1RB>, Right side, High Channel, 711.00 MHz

Body worn IEEE 802.11b, Back side, Middle Channel, 2437.0 MHz

Communication System: IEEE 802.11b; Frequency: 2437.0 MHz; Duty Cycle:1:1

Medium parameters used (interpolated): f = 2437.0 MHz; σ = 1.97 S/m; ε_r = 52.81; ρ = 1000 kg/m^3

Phantom section: Flat Section

Probe: EX3DV4 – SN3842; ConvF(7.01, 7.01, 7.01); Calibrated: 08/15/2017;

Sensor-Surface: 2mm (Mechanical Surface Detection)

Electronics: DAE4 Sn1315; Calibrated: 08/15/2017

Phantom: ELI 4.0; Type: QDOVA001BA;

Measurement SW: DASY52, Version 52.8 (2); SEMCAD X Version 14.6.6 (6824)

Back Side 2437.0 MHz/Area Scan (101x181x1): Interpolated grid: dx=1.50 mm, dy=1.50 mm

Maximum value of SAR (interpolated) = 0.512 W/kg

Back Side 2437.0 MHz /Zoom Scan (5x5x7)/Cube 0: Measurement grid: dx=8mm, dy=8mm, dz=5mm

Reference Value = 9.238 V/m; Power Drift = -0.04 dB

Peak SAR (extrapolated) = 0.636 W/kg

SAR(1 g) = 0.412 W/kg; SAR(10 g) = 0.259 W/kg

Maximum value of SAR (measured) = 0.536 W/kg

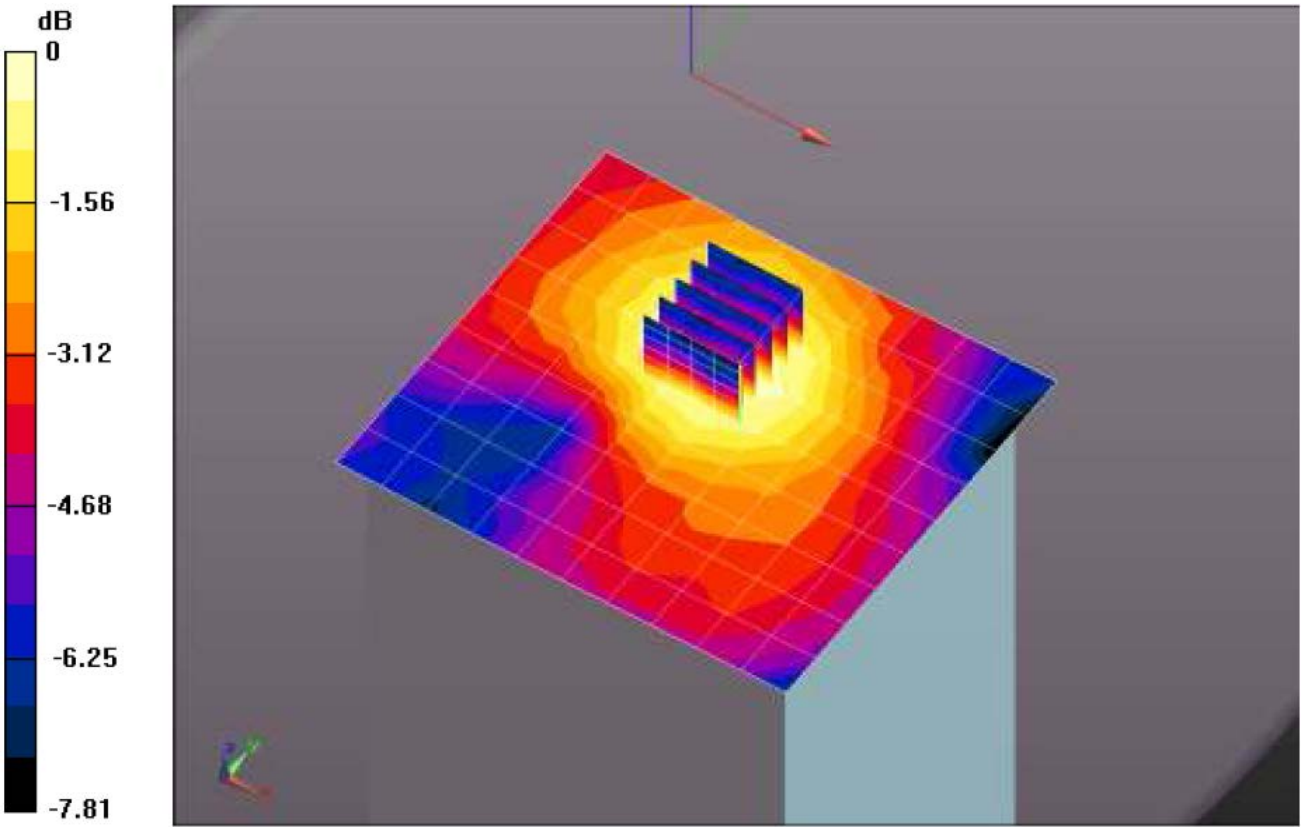

0 dB = 0.536 W/kg = -2.71 dB W/kg

Date/Time: 09/24/2017 10:55:17 AM

Figure 17: Body worn IEEE 802.11b, Back side, Middle Channel, 2437.0 MHz

Extremity – IEEE 802.11b, Right side, Middle Channel, 2437.0 MHz

Communication System: IEEE 802.11b; Frequency: 2437.0 MHz; Duty Cycle:1:1

Medium parameters used (interpolated): f = 2437.0 MHz; σ = 1.97 S/m; ε_r = 52.81; ρ = 1000 kg/m^3

Phantom section: Flat Section

Probe: EX3DV4 – SN3842; ConvF(7.01, 7.01, 7.01); Calibrated: 08/15/2017;

Sensor-Surface: 2mm (Mechanical Surface Detection)

Electronics: DAE4 Sn1315; Calibrated: 08/15/2017

Phantom: ELI 4.0; Type: QDOVA001BA;

Measurement SW: DASY52, Version 52.8 (2); SEMCAD X Version 14.6.6 (6824)

Right Side 2437.0 MHz /Area Scan (101x181x1): Interpolated grid: dx=1.50 mm, dy=1.50 mm

Maximum value of SAR (interpolated) = 1.37 W/kg

Right Side 2437.0 MHz /Zoom Scan (5x5x7)/Cube 0: Measurement grid: dx=8mm, dy=8mm, dz=5mm

Reference Value = 17.966 V/m; Power Drift = -0.04 dB

Peak SAR (extrapolated) = 1.93 W/kg

SAR(1 g) = 1.15 W/kg; SAR(10 g) = 0.747 W/kg

Maximum value of SAR (measured) = 1.38 W/kg

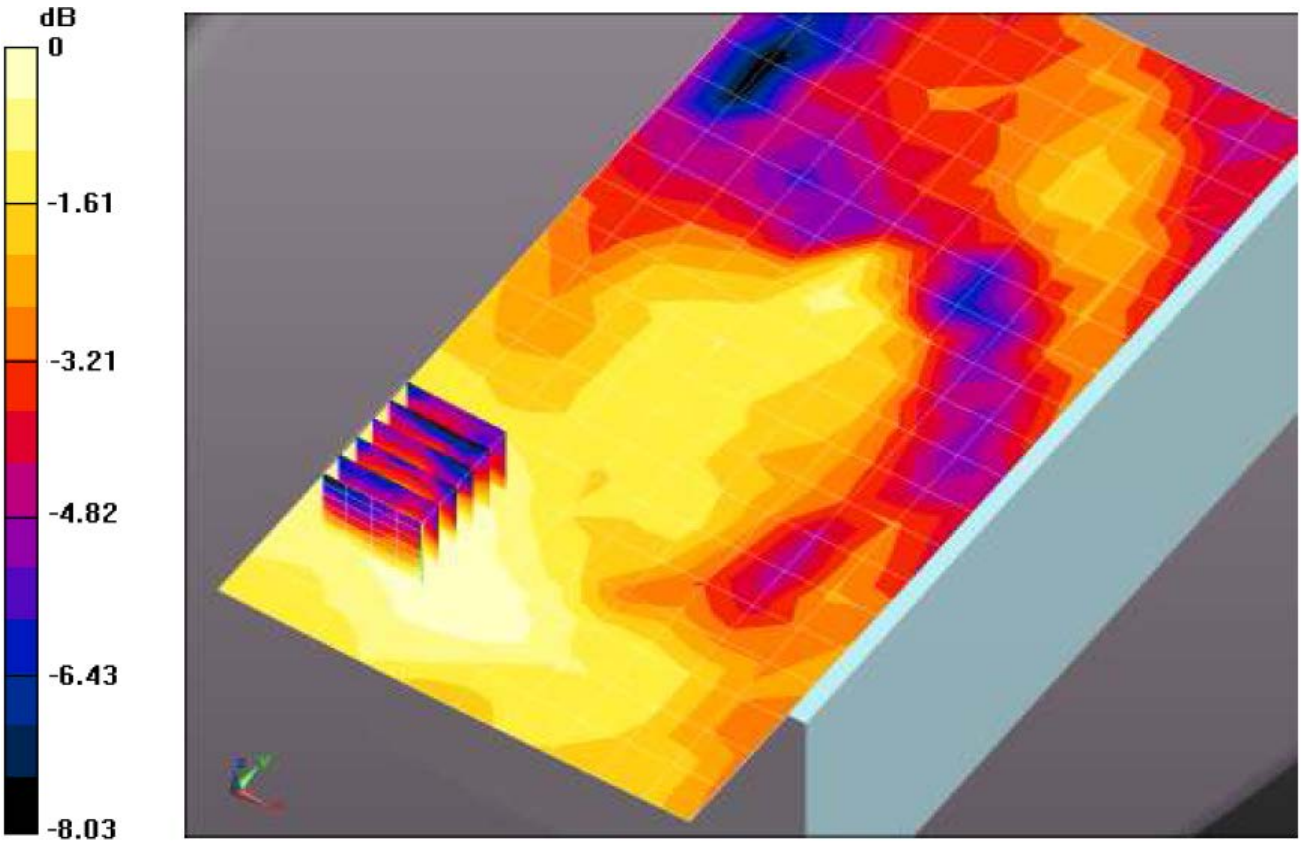

0 dB = 1.38 W/kg = 1.40 dB W/kg

Date/Time: 09/24/2017 16:07:23 PM

Figure 18: Extremity – IEEE 802.11b, Right side, Middle Channel, 2437 MHz

8. Calibration Certificate

8.1 Probe Calibration Cericate

In Collaboration with
s p e a g
CALIBRATION LABORATORY
Add: No.51 Xueyuan Road, Haidian District, Beijing, 100191, China
Tel: +86-10-62304633-2218 Fax: +86-10-62304633-2209
E-mail: cttl@chinattl.com Http://www.chinattl.cn

中国认可
国际互认
校准
CALIBRATION
CNAS L0570

Client CIQ(Shenzhen) Certificate No: Z17-97110

CALIBRATION CERTIFICATE

Object: EX3DV4 - SN:3842

Calibration Procedure(s): FF-Z11-004-01
Calibration Procedures for Dosimetric E-field Probes

Calibration date: August 15, 2017

This calibration Certificate documents the traceability to national standards, which realize the physical units of measurements(SI). The measurements and the uncertainties with confidence probability are given on the following pages and are part of the certificate.

All calibrations have been conducted in the closed laboratory facility: environment temperature(22±3)℃ and humidity<70%.

Calibration Equipment used (M&TE critical for calibration)

Primary Standards	ID #	Cal Date(Calibrated by, Certificate No.)	Scheduled Calibration
Power Meter NRP2	101919	27-Jun-17 (CTTL, No.J17X05857)	Jun-18
Power sensor NRP-Z91	101547	27-Jun-17 (CTTL, No.J17X05857)	Jun-18
Power sensor NRP-Z91	101548	27-Jun-17 (CTTL, No.J17X05857)	Jun-18
Reference10dBAttenuator	18N50W-10dB	13-Mar-16(CTTL,No.J16X01547)	Mar-18
Reference20dBAttenuator	18N50W-20dB	13-Mar-16(CTTL, No.J16X01548)	Mar-18
Reference Probe EX3DV4	SN 7433	26-Sep-16(SPEAG,No.EX3-7433_Sep16)	Sep-17
DAE4	SN 549	13-Dec-16(SPEAG, No.DAE4-549_Dec16)	Dec -17
Secondary Standards	**ID #**	**Cal Date(Calibrated by, Certificate No.)**	**Scheduled Calibration**
SignalGeneratorMG3700A	6201052605	27-Jun-17 (CTTL, No.J17X05858)	Jun-18
Network Analyzer E5071C	MY46110673	13-Jan-17 (CTTL, No.J17X00285)	Jan -18

	Name	Function	Signature
Calibrated by:	Yu Zongying	SAR Test Engineer	
Reviewed by:	Lin Hao	SAR Test Engineer	
Approved by:	Qi Dianyuan	SAR Project Leader	

Issued: August 16, 2017

This calibration certificate shall not be reproduced except in full without written approval of the laboratory.

Certificate No: Z17-97110 Page 1 of 11

In Collaboration with
s p e a g
CALIBRATION LABORATORY
Add: No.51 Xueyuan Road, Haidian District, Beijing, 100191, China
Tel: +86-10-62304633-2218 Fax: +86-10-62304633-2209
E-mail: cttl@chinattl.com Http://www.chinattl.cn

Glossary:

TSL	tissue simulating liquid
NORMx,y,z	sensitivity in free space
ConvF	sensitivity in TSL / NORMx,y,z
DCP	diode compression point
CF	crest factor (1/duty_cycle) of the RF signal
A,B,C,D	modulation dependent linearization parameters
Polarization Φ	Φ rotation around probe axis
Polarization θ	θ rotation around an axis that is in the plane normal to probe axis (at measurement center), i θ=0 is normal to probe axis
Connector Angle	information used in DASY system to align probe sensor X to the robot coordinate system

Calibration is Performed According to the Following Standards:

a) IEEE Std 1528-2013, "IEEE Recommended Practice for Determining the Peak Spatial-Averaged Specific Absorption Rate (SAR) in the Human Head from Wireless Communications Devices: Measurement Techniques", June 2013

b) IEC 62209-1, "Measurement procedure for the assessment of Specific Absorption Rate (SAR) from hand-held and body-mounted devices used next to the ear (frequency range of 300 MHz to 6 GHz)", July 2016

c) IEC 62209-2, "Procedure to determine the Specific Absorption Rate (SAR) for wireless communication devices used in close proximity to the human body (frequency range of 30 MHz to 6 GHz)", March 2010

d) KDB 865664, "SAR Measurement Requirements for 100 MHz to 6 GHz"

Methods Applied and Interpretation of Parameters:

- *NORMx,y,z:* Assessed for E-field polarization θ=0 (f≤900MHz in TEM-cell; f>1800MHz: waveguide). NORMx,y,z are only intermediate values, i.e., the uncertainties of NORMx,y,z does not effect the E^2-field uncertainty inside TSL (see below ConvF).
- *NORM(f)x,y,z = NORMx,y,z* frequency_response* (see Frequency Response Chart). This linearization is implemented in DASY4 software versions later than 4.2. The uncertainty of the frequency response is included in the stated uncertainty of ConvF.
- *DCPx,y,z:* DCP are numerical linearization parameters assessed based on the data of power sweep (no uncertainty required). DCP does not depend on frequency nor media.
- PAR: PAR is the Peak to Average Ratio that is not calibrated but determined based on the signal characteristics.
- *Ax,y,z; Bx,y,z; Cx,y,z;VRx,y,z:*A,B,C are numerical linearization parameters assessed based on the data of power sweep for specific modulation signal. The parameters do not depend on frequency nor media. VR is the maximum calibration range expressed in RMS voltage across the diode.
- *ConvF and Boundary Effect Parameters:* Assessed in flat phantom using E-field (or Temperature Transfer Standard for f≤800MHz) and inside waveguide using analytical field distributions based on power measurements for f >800MHz. The same setups are used for assessment of the parameters applied for boundary compensation (alpha, depth) of which typical uncertainty valued are given. These parameters are used in DASY4 software to improve probe accuracy close to the boundary. The sensitivity in TSL corresponds to NORMx,y,z* ConvF whereby the uncertainty corresponds to that given for ConvF. A frequency dependent ConvF is used in DASY version 4.4 and higher which allows extending the validity from±50MHz to±100MHz.
- *Spherical isotropy (3D deviation from isotropy):* in a field of low gradients realized using a flat phantom exposed by a patch antenna.
- *Sensor Offset:* The sensor offset corresponds to the offset of virtual measurement center from the probe tip (on probe axis). No tolerance required.
- *Connector Angle:* The angle is assessed using the information gained by determining the *NORMx* (no uncertainty required).

This report shall not be reproduced except in full, without the written approval of Shenzhen LCS Compliance Testing Laboratory Ltd.

In Collaboration with
s p e a g
CALIBRATION LABORATORY
Add: No.51 Xueyuan Road, Haidian District, Beijing, 100191, China
Tel: +86-10-62304633-2218 Fax: +86-10-62304633-2209
E-mail: cttl@chinattl.com Http://www.chinattl.cn

Probe EX3DV4

SN: 3842

Calibrated: August 15, 2017

Calibrated for DASY/EASY Systems

(Note: non-compatible with DASY2 system!)

This report shall not be reproduced except in full, without the written approval of Shenzhen LCS Compliance Testing Laboratory Ltd.

In Collaboration with
s p e a g
CALIBRATION LABORATORY
Add: No.51 Xueyuan Road, Haidian District, Beijing, 100191, China
Tel: +86-10-62304633-2218 Fax: +86-10-62304633-2209
E-mail: cttl@chinattl.com Http://www.chinattl.cn

DASY/EASY – Parameters of Probe: EX3DV4 – SN: 3842

Basic Calibration Parameters

	Sensor X	Sensor Y	Sensor Z	Unc (k=2)
Norm(μV/(V/m)^2)[A]	0.34	0.53	0.42	±10.0%
DCP(mV)[B]	102.3	102.6	101.2	

Modulation Calibration Parameters

UID	Communication System Name		A dB	B dB√μV	C	D dB	VR mV	Unc[E] (k=2)
0	CW	X	0.0	0.0	1.0	0.00	137.4	±2.1%
		Y	0.0	0.0	1.0		176.2	
		Z	0.0	0.0	1.0		153.3	

The reported uncertainty of measurement is stated as the standard uncertainty of Measurement multiplied by the coverage factor k=2, which for a normal distribution Corresponds to a coverage probability of approximately 95%.

[A] The uncertainties of Norm X, Y, Z do not affect the E^2-field uncertainty inside TSL (see Page 5 and Page 6).
[B] Numerical linearization parameter: uncertainty not required.
[E] Uncertainly is determined using the max. deviation from linear response applying rectangular distribution and is expressed for the square of the field value.

This report shall not be reproduced except in full, without the written approval of Shenzhen LCS Compliance Testing Laboratory Ltd.

In Collaboration with
s p e a g
CALIBRATION LABORATORY
Add: No.51 Xueyuan Road, Haidian District, Beijing, 100191, China
Tel: +86-10-62304633-2218 Fax: +86-10-62304633-2209
E-mail: cttl@chinattl.com Http://www.chinattl.cn

DASY/EASY – Parameters of Probe: EX3DV4 – SN: 3842

Calibration Parameter Determined in Head Tissue Simulating Media

f [MHz][C]	Relative Permittivity [F]	Conductivity (S/m) [F]	ConvF X	ConvF Y	ConvF Z	Alpha[G]	Depth[G] (mm)	Unct. (k=2)
750	41.9	0.89	9.41	9.41	9.41	0.30	0.90	±12.1%
900	41.5	0.97	9.15	9.15	9.15	0.16	1.37	±12.1%
1750	40.1	1.37	7.89	7.89	7.89	0.23	1.09	±12.1%
1900	40.0	1.40	7.58	7.58	7.58	0.20	1.19	±12.1%
2450	39.2	1.80	6.92	6.92	6.92	0.32	1.16	±12.1%
2600	39.0	1.96	6.78	6.78	6.78	0.40	0.93	±12.1%

[C] Frequency validity above 300 MHz of ±100MHz only applies for DASY v4.4 and higher (Page 2), else it is restricted to ±50MHz. The uncertainty is the RSS of ConvF uncertainty at calibration frequency and the uncertainty for the indicated frequency band. Frequency validity below 300 MHz is ± 10, 25, 40, 50 and 70 MHz for ConvF assessments at 30, 64, 128, 150 and 220 MHz respectively. Above 5 GHz frequency validity can be extended to ± 110 MHz.

[F] At frequency below 3 GHz, the validity of tissue parameters (ε and σ) can be relaxed to ±10% if liquid compensation formula is applied to measured SAR values. At frequencies above 3 GHz, the validity of tissue parameters (ε and σ) is restricted to ±5%. The uncertainty is the RSS of the ConvF uncertainty for indicated target tissue parameters.

[G] Alpha/Depth are determined during calibration. SPEAG warrants that the remaining deviation due to the boundary effect after compensation is always less than ± 1% for frequencies below 3 GHz and below ± 2% for the frequencies between 3-6 GHz at any distance larger than half the probe tip diameter from the boundary.

This report shall not be reproduced except in full, without the written approval of Shenzhen LCS Compliance Testing Laboratory Ltd.

In Collaboration with
s p e a g
CALIBRATION LABORATORY
Add: No.51 Xueyuan Road, Haidian District, Beijing, 100191, China
Tel: +86-10-62304633-2218 Fax: +86-10-62304633-2209
E-mail: cttl@chinattl.com Http://www.chinattl.cn

DASY/EASY – Parameters of Probe: EX3DV4 – SN: 3842

Calibration Parameter Determined in Body Tissue Simulating Media

f [MHz][C]	Relative Permittivity [F]	Conductivity (S/m) [F]	ConvF X	ConvF Y	ConvF Z	Alpha[G]	Depth[G] (mm)	Unct. (k=2)
750	55.5	0.96	9.31	9.31	9.31	0.30	0.90	±12.1%
900	55.0	1.05	9.02	9.02	9.02	0.24	1.15	±12.1%
1750	53.4	1.49	7.57	7.57	7.57	0.23	1.12	±12.1%
1900	53.3	1.52	7.32	7.32	7.32	0.22	1.21	±12.1%
2450	52.7	1.95	7.01	7.01	7.01	0.42	1.04	±12.1%
2600	52.5	2.16	6.97	6.97	6.97	0.42	1.01	±12.1%

[C] Frequency validity above 300 MHz of ±100MHz only applies for DASY v4.4 and higher (Page 2), else it is restricted to ±50MHz. The uncertainty is the RSS of ConvF uncertainty at calibration frequency and the uncertainty for the indicated frequency band. Frequency validity below 300 MHz is ± 10, 25, 40, 50 and 70 MHz for ConvF assessments at 30, 64, 128, 150 and 220 MHz respectively. Above 5 GHz frequency validity can be extended to ± 110 MHz.

[F] At frequency below 3 GHz, the validity of tissue parameters (ε and σ) can be relaxed to ±10% if liquid compensation formula is applied to measured SAR values. At frequencies above 3 GHz, the validity of tissue parameters (ε and σ) is restricted to ±5%. The uncertainty is the RSS of the ConvF uncertainty for indicated target tissue parameters.

[G] Alpha/Depth are determined during calibration. SPEAG warrants that the remaining deviation due to the boundary effect after compensation is always less than ± 1% for frequencies below 3 GHz and below ± 2% for the frequencies between 3-6 GHz at any distance larger than half the probe tip diameter from the boundary.

This report shall not be reproduced except in full, without the written approval of Shenzhen LCS Compliance Testing Laboratory Ltd.

In Collaboration with
s p e a g
CALIBRATION LABORATORY
Add: No.51 Xueyuan Road, Haidian District, Beijing, 100191, China
Tel: +86-10-62304633-2218 Fax: +86-10-62304633-2209
E-mail: cttl@chinattl.com Http://www.chinattl.cn

Frequency Response of E-Field
(TEM-Cell: ifi110 EXX, Waveguide: R22)

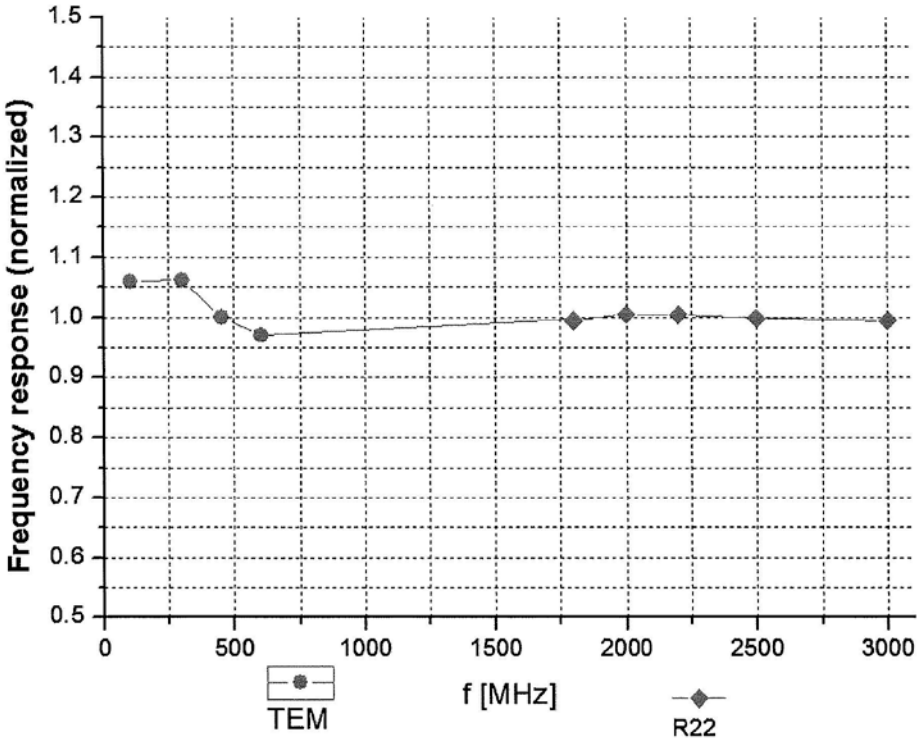

Uncertainty of Frequency Response of E-field: ±7.4% (k=2)

This report shall not be reproduced except in full, without the written approval of Shenzhen LCS Compliance Testing Laboratory Ltd.

In Collaboration with
s p e a g
CALIBRATION LABORATORY
Add: No.51 Xueyuan Road, Haidian District, Beijing, 100191, China
Tel: +86-10-62304633-2218 Fax: +86-10-62304633-2209
E-mail: cttl@chinattl.com Http://www.chinattl.cn

Receiving Pattern (Φ), θ=0°

f=600 MHz, TEM

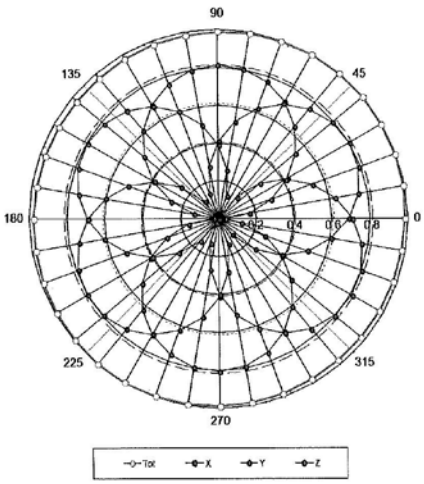

f=1800 MHz, R22

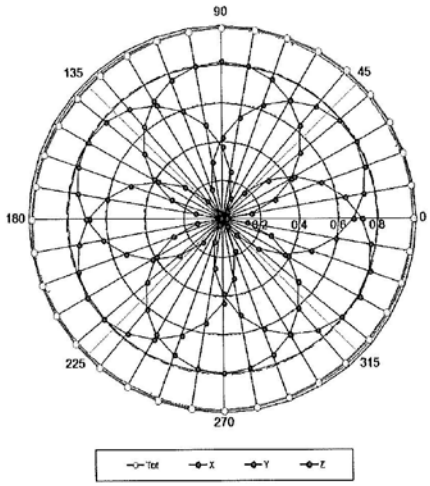

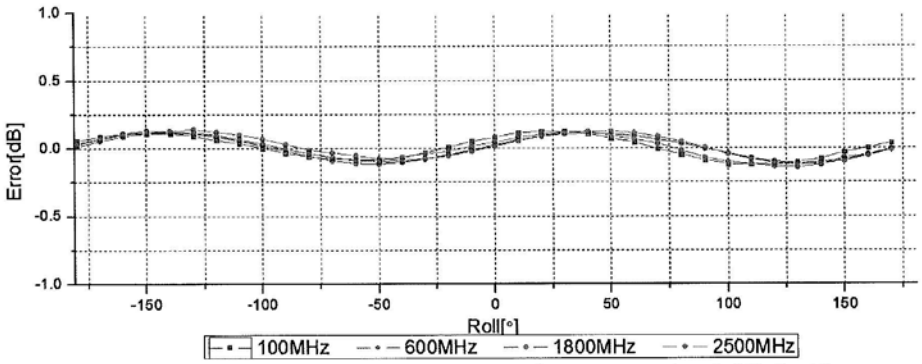

Uncertainty of Axial Isotropy Assessment: ±1.2% (k=2)

This report shall not be reproduced except in full, without the written approval of Shenzhen LCS Compliance Testing Laboratory Ltd.

In Collaboration with
s p e a g
CALIBRATION LABORATORY
Add: No.51 Xueyuan Road, Haidian District, Beijing, 100191, China
Tel: +86-10-62304633-2218 Fax: +86-10-62304633-2209
E-mail: cttl@chinattl.com Http://www.chinattl.cn

Dynamic Range f(SAR$_{head}$)
(TEM cell, f = 900 MHz)

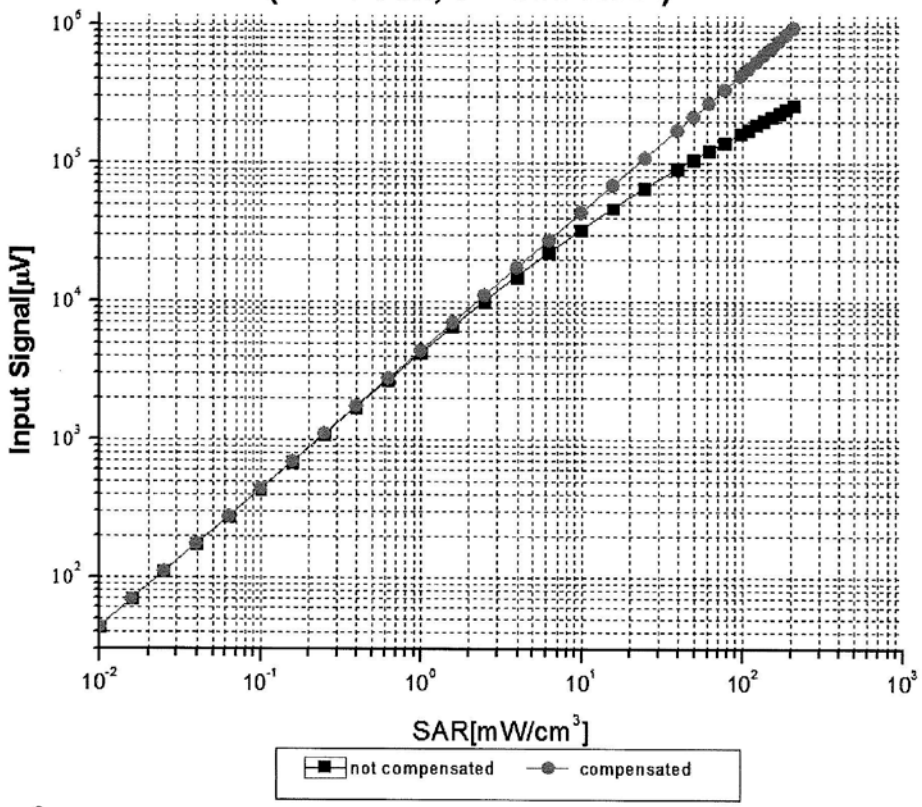

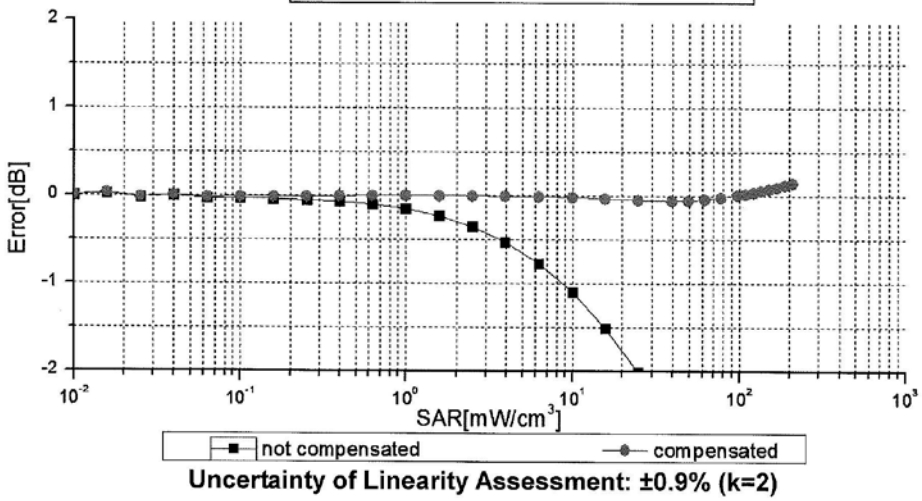

Uncertainty of Linearity Assessment: ±0.9% (k=2)

Certificate No: Z17-97110 Page 9 of 11

In Collaboration with
s p e a g
CALIBRATION LABORATORY
Add: No.51 Xueyuan Road, Haidian District, Beijing, 100191, China
Tel: +86-10-62304633-2218 Fax: +86-10-62304633-2209
E-mail: cttl@chinattl.com Http://www.chinattl.cn

Conversion Factor Assessment

f=750 MHz, WGLS R9(H_convF)

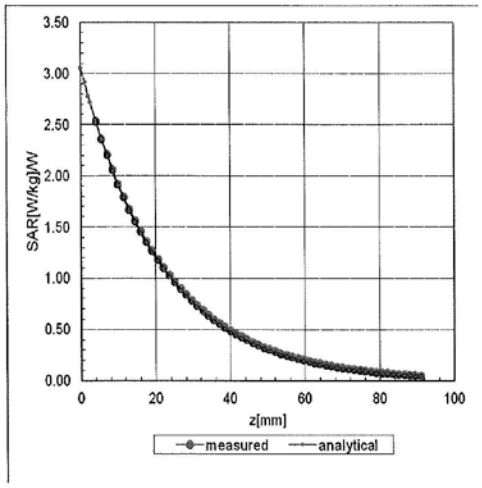

f=1750 MHz, WGLS R22(H_convF)

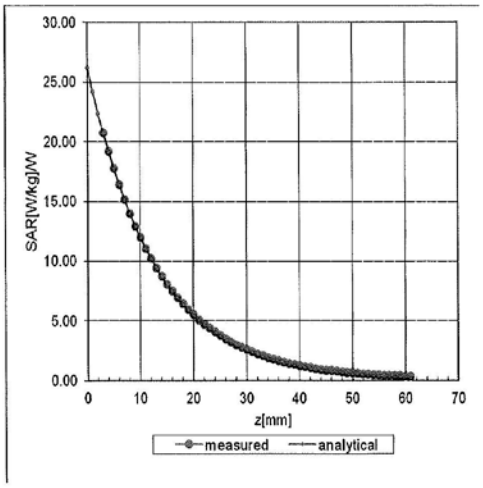

Deviation from Isotropy in Liquid

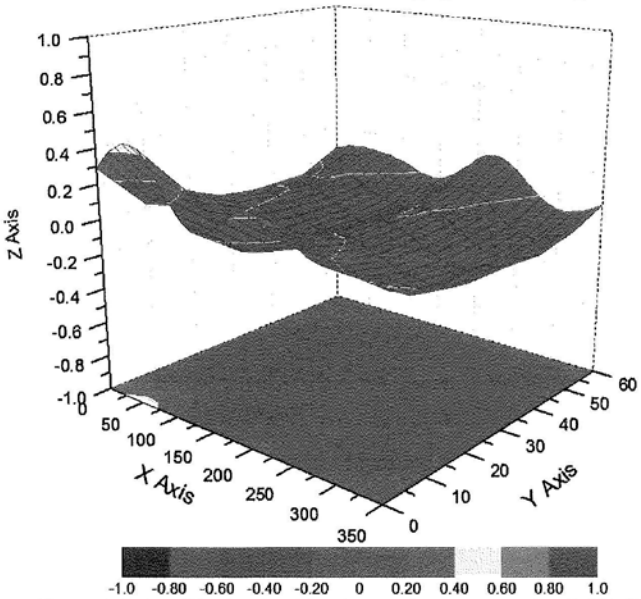

Uncertainty of Spherical Isotropy Assessment: ±3.2% (K=2)

This report shall not be reproduced except in full, without the written approval of Shenzhen LCS Compliance Testing Laboratory Ltd.

In Collaboration with
s p e a g
CALIBRATION LABORATORY
Add: No.51 Xueyuan Road, Haidian District, Beijing, 100191, China
Tel: +86-10-62304633-2218 Fax: +86-10-62304633-2209
E-mail: cttl@chinattl.com Http://www.chinattl.cn

DASY/EASY – Parameters of Probe: EX3DV4 – SN: 3842

Other Probe Parameters

Sensor Arrangement	Triangular
Connector Angle (°)	67.2
Mechanical Surface Detection Mode	enabled
Optical Surface Detection Mode	disable
Probe Overall Length	337mm
Probe Body Diameter	10mm
Tip Length	9mm
Tip Diameter	2.5mm
Probe Tip to Sensor X Calibration Point	1mm
Probe Tip to Sensor Y Calibration Point	1mm
Probe Tip to Sensor Z Calibration Point	1mm
Recommended Measurement Distance from Surface	1.4mm

This report shall not be reproduced except in full, without the written approval of Shenzhen LCS Compliance Testing Laboratory Ltd.

8.2 D835V2 Dipole Calibration Certificate

In Collaboration with
s p e a g
CALIBRATION LABORATORY

中国认可
国际互认
校准
CALIBRATION
CNAS L0570

Add: No.51 Xueyuan Road, Haidian District, Beijing, 100191, China
Tel: +86-10-62304633-2079 Fax: +86-10-62304633-2504
E-mail: cttl@chinattl.com Http://www.chinattl.cn

Client NTI Certificate No: Z16-97153

CALIBRATION CERTIFICATE

Object	D835V2 - SN: 4d143
Calibration Procedure(s)	FD-Z11-003-01 Calibration Procedures for dipole validation kits
Calibration date:	October 10, 2016

This calibration Certificate documents the traceability to national standards, which realize the physical units of measurements(SI). The measurements and the uncertainties with confidence probability are given on the following pages and are part of the certificate.

All calibrations have been conducted in the closed laboratory facility: environment temperature(22±3)℃ and humidity<70%.

Calibration Equipment used (M&TE critical for calibration)

Primary Standards	ID #	Cal Date(Calibrated by, Certificate No.)	Scheduled Calibration
Power Meter NRP2	101919	27-Jun-16 (CTTL, No.J16X04777)	Jun-17
Power sensor NRP-Z91	101547	27-Jun-16 (CTTL, No.J16X04777)	Jun-17
Reference Probe ES3DV3	SN 3149	15-Apr-16(CTTL-SPEAG,No.J16-97035)	Apr-17
DAE4	SN 777	22-Aug-16(CTTL-SPEAG,No.Z16-97138)	Aug-17
Secondary Standards	**ID #**	**Cal Date(Calibrated by, Certificate No.)**	**Scheduled Calibration**
Signal Generator E4438C	MY49071430	01-Feb-16 (CTTL, No.J16X00893)	Jan-17
Network Analyzer E5071C	MY46110673	26-Jan-16 (CTTL, No.J16X00894)	Jan-17

	Name	Function	Signature
Calibrated by:	Zhao Jing	SAR Test Engineer	
Reviewed by:	Qi Dianyuan	SAR Project Leader	
Approved by:	Liu Wei	Deputy Director of SEM Department	

Issued: October 14, 2016

This calibration certificate shall not be reproduced except in full without written approval of the laboratory.

Certificate No: Z16-97153 Page 1 of 8