FCC PART 22/24/27 TEST REPORT

FCC Part 22/ Part 24/ Part 27

Report Reference No.....:	**LCS170906103AE5**
FCC ID.....:	**2AJMSP2000L**
Date of Issue. .....:	**October 10, 2017**
Testing Laboratory Name .....:	**Shenzhen LCS Compliance Testing Laboratory Ltd.**
Address .....:	1/F., Xingyuan Industrial Park, Tongda Road, Bao'an Avenue, Bao'an District, Shenzhen, Guangdong, China
Applicant's name.....:	**Shanghai SmartPeak Technology Co.,Ltd.**
Address .....:	Room 1, No.3 Builiding, NO.295, Qianqiao Road, Fengxian District, Shanghai
Test specification .....**:**	
Standard .....:	**FCC CFR Title 47 Part 2, Part 22, Part 24, Part 27** **EIA/TIA 603-D: 2010** **KDB 971168 D01**
Test Report Form No.....:	LCSEMC-1.0
TRF Originator.....:	Shenzhen LCS Compliance Testing Laboratory Ltd.
Master TRF.....:	Dated 2011-03

Shenzhen LCS Compliance Testing Laboratory Ltd. All rights reserved.

This publication may be reproduced in whole or in part for non-commercial purposes as long as the Shenzhen LCS Compliance Testing Laboratory Ltd. is acknowledged as copyright owner and source of the material. Shenzhen LCS Compliance Testing Laboratory Ltd. takes no responsibility for and will not assume liability for damages resulting from the reader's interpretation of the reproduced material due to its placement and context.

Test item description .....:	POS Terminal
Trade Mark .....:	SmartPeak
Model/Type reference.....:	P2000L
Listed Models .....:	/
Modulation Type .....:	QPSK, 16QAM
Rating .....:	DC 7.40V by Li-ion Battery(2000mAh) Input: AC 100-240 V 50/60Hz 0.45A Output: DC5V/2A
Hardware version .....:	BSTB16014
Software version.....:	V1.0
Result.....:	**PASS**

Compiled by:	**Supervised by:**	**Approved by:**
Peter Xiao / Administrators	Dick Su / Technique principal	Gavin Liang/ Manager

TEST REPORT

Test Report No. :	LCS170906103AE5	October 10, 2017 Date of issue

Equipment under Test	:	P2000L
Model /Type	:	POS Terminal
Listed Models	:	/
Applicant	:	**Shanghai SmartPeak Technology Co.,Ltd.**
Address	:	Room 1,No.3 Builiding,NO.295,QianqiaoRoad, Fengxian District, Shanghai
Manufacturer	:	**Shanghai SmartPeak Technology Co.,Ltd.**
Address	:	Room 1,No.3 Builiding,NO.295,QianqiaoRoad, Fengxian District, Shanghai
Factory	:	**Shanghai SmartPeak Technology Co.,Ltd.**
Address	:	Room 1,No.3 Builiding,NO.295,QianqiaoRoad, Fengxian District, Shanghai

Test Result:	**PASS**

The test report merely corresponds to the test sample.
It is not permitted to copy extracts of these test result without the written permission of the test laboratory.

Revison History

Revision	Issue Date	Revisions	Revised By
00	October 10, 2017	Initial Issue	Gavin Liang

This report shall not be reproduced except in full, without the written approval of Shenzhen LCS Compliance Testing Laboratory Ltd.

Contents

1 TEST STANDARDS 5

2 SUMMARY 6

2.1 General Remarks 6
2.2 Product Description 6
2.3 Equipment under Test 7
2.4 Short description of the Equipment under Test (EUT) 7
2.5 Internal Identification of AE used during the test 7
2.6 Normal Accessory setting 7
2.7 EUT configuration 7
2.8 Related Submittal(s) / Grant (s) 8
2.9 Modifications 8
2.10 General Test Conditions/Configurations 8

3 TEST ENVIRONMENT 9

3.1 Address of the test laboratory 9
3.2 Test Facility 9
3.3 Environmental conditions 9
3.4 Test Description 9
3.5 Equipments Used during the Test 12
3.6 Measurement uncertainty 13

4 TEST CONDITIONS AND RESULTS..... 14

4.1 Output Power 14
4.2 Peak-to-Average Ratio (PAR) 22
4.3 Occupied Bandwidth and Emission Bandwidth 23
4.4 Band Edge compliance 24
4.5 Spurious Emssion on Antenna Port 25
4.6 Radiated Spurious Emssion 27
4.7 Frequency Stability under Temperature & Voltage Variations 47

5 TEST SETUP PHOTOS OF THE EUT 51

6 EXTERNAL PHOTOS OF THE EUT..... 51

7 INTERNAL PHOTOS OF THE EUT 51

This report shall not be reproduced except in full, without the written approval of Shenzhen LCS Compliance Testing Laboratory Ltd.

1 TEST STANDARDS

The tests were performed according to following standards:
FCC Part 22(10-1-16 Edition):PRIVATE LAND MOBILE RADIO SERVICES.
FCC Part 24(10-1-16 Edition):PUBLIC MOBILE SERVICES
FCC Part 27(10-1-16 Edition):MISCELLANEOUS WIRELESS COMMUNICATIONS SERVICES
TIA/EIA 603 D June 2010: Land Mobile FM or PM Communications Equipment Measurement and Performance Standards.
47 CFR FCC Part 15 Subpart B: Unintentional Radiators
FCC Part 2: FREQUENCY ALLOCA-TIONS AND RADIO TREATY MAT-TERS; GENERAL RULES AND REG-ULATIONS
ANSI C63.4:2014: Methods of Measurement of Radio-Noise Emissions from Low-Voltage Electrical and Electronic Equipment in the Range of 9 kHz to 40 GHz
FCCKDB971168D01 Power Meas License Digital Systems

This report shall not be reproduced except in full, without the written approval of Shenzhen LCS Compliance Testing Laboratory Ltd.

2 SUMMARY

2.1 General Remarks

Date of receipt of test sample	:	September 13, 2017
Testing commenced on	:	September 13, 2017
Testing concluded on	:	October 10, 2017

2.2 Product Description

The **Shanghai SmartPeak Technology Co.,Ltd.**'s Model: P2000L or the "EUT" as referred to in this report; more general information as follows, for more details, refer to the user's manual of the EUT.

Name of EUT	POS Terminal
Model Number	P2000L
Modulation Type	GMSK for GSM/GPRS, 8-PSK for EDGE,QPSK for UMTS, QPSK, 16QAM for LTE
Antenna Gain	0.5dBi (max.) For GSM 850; 0.5dBi (max.) For GSM 900; 0.5dBi (max.) For DCS 1800; 0.5dBi (max.) For PCS 1900; 0.5dBi (max.) For WCDMA Band II 0.5dBi (max.) For WCDMA Band V 0.5dBi (max.) For LTE FDD Band 2; 0.5dBi (max.) For LTE FDD Band 5; 0.5dBi (max.) For LTE FDD Band 7; 0.5dBi (max.) For LTE FDD Band 12; 0.5dBi (max.) For BT and WLAN 0.5dBi (max.) For NFC 0.5dBi (max.) For GPS
Hardware version	BSTB16014
Software version	V1.0
GSM/EDGE/GPRS Operation Frequency Band	GSM850/PCS1900/GPRS850/GPRS1900/EDGE850/EDGE1900
UMTS Operation Frequency Band	UMTS FDD Band II/V
LTE Operation Frequency Band	LTE FDD band 2, 5, 7, 12
GSM/EDGE/GPRS	Supported GSM/GPRS/EDGE
GSM Release Version	R99
GSM/EDGE/GPRS Power Class	GSM850:Power Class 4/ PCS1900:Power Class 1
GPRS/EDGE Multislot Class	GPRS/EDGE: Multi-slot Class 12
GPRS operation mode	Class B
WCDMA Release Version	R99
HSDPA Release Version	Release 8
HSUPA Release Version	Release 6
DC-HSUPA Release Version	Not Supported
LTE Release Version	R8
LTE/UMTS Power Class	Class 3
WLAN FCC Modulation Type	IEEE 802.11b: DSSS(CCK,DQPSK,DBPSK) IEEE 802.11g: OFDM(64QAM, 16QAM, QPSK, BPSK) IEEE 802.11n HT20: OFDM (64QAM, 16QAM, QPSK,BPSK)
WLAN FCC Operation frequency	IEEE 802.11b: 2412-2462MHz IEEE 802.11g: 2412-2462MHz IEEE 802.11n HT20: 2412-2462MHz
Antenna Type	PIFA Antenna
BT Modulation Type	GFSK,8-DPSK,π/4-DQPSK(BT V4.0)
Extreme temp. Tolerance	-30°C to +50°C
GPS function	Support and only RX
NFC Function	Supported, RFID 13.56MHz
Extreme vol. Limits	6.70VDC to 8.40VDC (nominal: 7.40VDC)

This report shall not be reproduced except in full, without the written approval of Shenzhen LCS Compliance Testing Laboratory Ltd.

2.3 Equipment under Test

Power supply system utilised

Power supply voltage	:	○	120V/ 60 Hz	○	115V/60Hz
		○	12 V DC	○	24 V DC
		●	Other (specified in blank below)		

DC 7.40V

2.4 Short description of the Equipment under Test (EUT)

2.4.1 GeneralDescription

P2000L is subscriber equipment in the WCDMA/GSM/LTE system. The HSPA/UMTS frequency band is Band II/V, LTE frequency band is band 2, band 5, band 7, band 12. The GSM/GPRS/EDGE frequency band includes GSM850 and GSM900 and DCS1800 and PCS1900, but only Band II and Band V and GSM850 and PCS1900 bands test data included in this report. The Terminal implements such functions as RF signal receiving/transmitting, HSPA/UMTS and GPRS/EDGE protocol processing, video MMS service and etc. Externally it provides micro SD card interface and SIM card interface.

NOTE: Unless otherwise noted in the report, the functional boards installed in the units shall be selected from the below list, but not means all the functional boards listed below shall be installed in one unit.

2.5 Internal Identification of AE used during the test

AE ID*	Description
AE1	Battery
AE2	Charger

AE2
Model: ASSA65w-050200
INPUT: AC100-240V 50/60Hz 0.45A
OUTPUT: DC 5.0V 2A

*AE ID: is used to identify the test sample in the lab internally.

2.6 Normal Accessory setting

Fully charged battery was used during the test.

2.7 EUT configuration

The following peripheral devices and interface cables were connected during the measurement:

● - supplied by the manufacturer

○ - supplied by the lab

○	Power Cable	Length (m) :	/
		Shield :	/
		Detachable :	/
○	Multimeter	Manufacturer :	/
		Model No. :	/

2.8 Related Submittal(s) / Grant (s)

This submittal(s) (test report) is intended for **FCC ID: 2AJMSP2000L** filing to comply with FCC Part 22, FCC Part 24 Rules and FCC Part 27 Rules

2.9 Modifications

No modifications were implemented to meet testing criteria.

2.10 General Test Conditions/Configurations

2.10.1 Test Environment

EnvironmentParameter	SelectedValuesDuringTests	
Relative Humidity	Ambient	
Temperature	TN	Ambient
Voltage	VL	6.70V
	VN	7.40V
	VH	8.40V

NOTE:VL=lower extreme testvoltageVN=nominalvoltage
VH=upperextreme testvoltageTN=normaltemperature

3 TEST ENVIRONMENT

3.1 Address of the test laboratory

Shenzhen LCS Compliance Testing Laboratory Ltd

1/F., Xingyuan Industrial Park, Tongda Road, Bao'an Avenue, Bao'an District, Shenzhen, Guangdong, China
The sites are constructed in conformance with the requirements of ANSI C63.4 (2014) and CISPR Publication 22.

3.2 Test Facility

The test facility is recognized, certified, or accredited by the following organizations:
CNAS Registration Number. is L4595.
FCC Registration Number. is CN5024.
Industry Canada Registration Number. is 9642A-1.
ESMD Registration Number. is ARCB0108.
UL Registration Number. is 100571-492.
TUV SUD Registration Number. is SCN1081.
TUV RH Registration Number. is UA 50296516-001
NVLAP Registration Code is 600167-0

3.3 Environmental conditions

During the measurement the environmental conditions were within the listed ranges:

Temperature:	15-35 ° C
Humidity:	30-60 %
Atmospheric pressure:	950-1050mbar

3.4 Test Description

3.4.1 PCSBand (1850-1915MHz pairedwith 1930-1995MHz)

Test Item	FCC Rule No.	Requirements	Verdict
Effective(Isotropic) Radiated Output Power	§2.1046, §24.232	EIRP ≤ 2W	PASS
Peak-Average Ratio	§2.1046, §24.232	≤13dB	PASS
Modulation Characteristics	§2.1047	Digital modulation	N/A
Bandwidth	§2.1049	OBW: No limit. EBW: No limit.	PASS
Band Edges Compliance	§2.1051, §24.238	≤ -13dBm/1%*EBW, In 1MHz bands immediately outside and adjacent to The frequency block.	PASS
Spurious Emission at Antenna Terminals	§2.1051, §24.238	≤-13dBm/1MHz, from 9kHz to10th harmonics but outside authorized Operating frequency ranges.	PASS
Field Strength of Spurious Radiation	§2.1053, §24.238	≤ -13dBm/1MHz.	PASS
Frequency Stability	§2.1055, §24.235	FCC: within authorized frequency block.	PASS
Receiver Spurious Emissions	N/A	--	PASS
NOTE 1:For the verdict, the“N/A”denotes“not applicable”,the“N/T”de notes “not tested”.			

3.4.2 Cellular Band (824-849MHz paired with 869-894MHz)

Test Item	FCC Rule No.	Requirements	Verdict
Effective(Isotropic) Radiated Output Power	§2.1046, §22.913	FCC: ERP ≤ 7W.	PASS
Modulation Characteristics	§2.1047	Digital modulation	N/A
Bandwidth	§2.1049	OBW: No limit. EBW: No limit.	PASS
Band Edges Compliance	§2.1051, §22.917	≤-13dBm/1%*EBW, in 1MHz bands immediately outside and adjacent to The frequency block.	PASS
Spurious Emission at Antenna Terminals	§2.1051, §22.917	≤ -13dBm/100kHz, from 9kHz to 10th harmonics but outside authorized operating frequency ranges.	PASS
Field Strength of Spurious Radiation	§2.1053, §22.917	≤ -13dBm/100kHz.	PASS
Frequency Stability	§2.1055, §22.355	≤ ±2.5ppm.	PASS
Peak-Average Ratio	N/A	Limit≤13dB	PASS
Receiver Spurious Emissions	N/A	--	PASS
NOTE 1: For the verdict, the “N/A” denotes “not applicable”, the “N/T” de notes “not tested”			

3.4.3 BRS and EBS band (2500-2570MHz pairedwith 2620-2690MHz)

Test Item	FCC Rule No.	Requirements	Verdict
Effective(Isotropic) Radiated Output Power	§2.1046, §27.50h(2)	EIRP ≤ 2.0W.	PASS
Peak-AverageRatio	§2.1046, §27.50h	Limit≤13dB	PASS
Modulation Characteristics	§2.1047	Digital modulation	N/A
Bandwidth	§2.1049	OBW: No limit. EBW: No limit.	PASS
Band Edges Compliance	§2.1051, §27.53(m)	≤-13dBm/1%*EBW, in 1MHz bands immediately outside and adjacent to The frequency block.	PASS
Spurious Emissionat AntennaTerminals	§2.1051, §27.53(m)	≤ -13dBm/100kHz, from 9kHz to 10th harmonics but outside authorized operating frequency ranges.	PASS
Field Strength of Spurious Radiation	§2.1051, §27.53(m)	Limit≤13dB	PASS
Frequency Stability	§2.1055, §27.53(m)	≤ ±2.5ppm.	PASS
Receiver Spurious Emissions	N/A	--	PASS
NOTE 1:For the verdict, the“N/A”denotes“not applicable”,the“N/T”de notes “not tested”.			

3.4.4 Band 12(699-716MHz pairedwith 729-746MHz)

Test Item	FCC Rule No.	Requirements	Verdict
Effective(Isotropic) Radiated Output Power	§2.1046, §27.50c(10)	ERP ≤ 3W.	PASS
Peak-AverageRatio	§2.1046, §27.50(c)	Limit≤13dB	PASS
Modulation Characteristics	§2.1047	Digital modulation	N/A
Bandwidth	§2.1049	OBW: No limit. EBW: No limit.	PASS
Band Edges Compliance	§2.1051, §27.53(g)	≤-13dBm/1%*EBW, in 1MHz bands immediately outside and adjacent to The frequency block.	PASS
Spurious Emissionat AntennaTerminals	§2.1051, §27.53(g)	≤ -13dBm/100kHz, from 9kHz to 10th harmonics but outside authorized operating frequency ranges.	PASS
Field Strength of Spurious Radiation	§2.1051, §27.53(g)	Limit≤13dB	PASS
Frequency Stability	§2.1055, §27.53(g)	≤ ±2.5ppm.	PASS
Receiver Spurious Emissions	N/A	--	PASS
NOTE 1:For the verdict, the“N/A”denotes“not applicable”,the“N/T”de notes “not tested”.			

3.5 Equipments Used during the Test

Instrument	Manufacturer	Model No.	Serial No.	Characteristics	Cal Date	Due Date
EMC Receiver	R&S	ESCS 30	100174	9kHz – 2.75GHz	Jun 18, 2017	Jun 17, 2018
Signal analyzer	Agilent	E4448A(External mixers to 40GHz)	US44300469	9kHz~40GHz	Jul 16, 2017	Jul 15, 2018
LISN	MESS Tec	NNB-2/16Z	99079	9KHz-30MHz	Jun 18, 2017	Jun 17, 2018
LISN	EMCO	3819/2NM	9703-1839	9KHz-30MHz	Jun 18, 2017	Jun 17, 2018
RF Cable-CON	UTIFLEX	3102-26886-4	CB049	9KHz-30MHz	Jun 18, 2017	Jun 17, 2018
ISN	SCHAFFNER	ISN ST08	21653	9KHz-30MHz	Jun 18, 2017	Jun 17, 2018
3m Semi Anechoic Chamber	SIDT FRANKONIA	SAC-3M	03CH03-HY	30M-18GHz	Jun 18, 2017	Jun 17, 2018
Amplifier	SCHAFFNER	COA9231A	18667	9kHz-2GHzz	Apr 18, 2017	Apr 17, 2018
Amplifier	Agilent	8449B	3008A02120	1GHz-26.5GHz	Apr 18, 2017	Apr 17, 2018
Amplifier	MITEQ	AMF-6F-260400	9121372	26.5GHz-40GHz	Apr 18, 2017	Apr 17, 2018
Loop Antenna	R&S	HFH2-Z2	860004/001	9k-30MHz	Apr 18, 2017	Apr 17, 2018
By-log Antenna	SCHWARZBECK	VULB9163	9163-470	30MHz-1GHz	Apr 18, 2017	Apr 17, 2018
Horn Antenna	EMCO	3115	6741	1GHz-18GHz	Apr 18, 2017	Apr 17, 2018
Horn Antenna	SCHWARZBECK	BBHA9170	BBHA9170154	15GHz-40GHz	Apr 18, 2017	Apr 17, 2018
RF Cable-R03m	Jye Bao	RG142	CB021	30MHz-1GHz	Jun 18, 2017	Jun 17, 2018
RF Cable-HIGH	SUHNER	SUCOFLEX 106	03CH03-HY	1GHz-40GHz	Jun 18, 2017	Jun 17, 2018
Power Meter	R&S	NRVS	100444	DC-40GHz	Jun 18, 2017	Jun 17, 2018
Power Sensor	R&S	NRV-Z81	100458	DC-30GHz	Jun 18, 2017	Jun 17, 2018
Power Sensor	R&S	NRV-Z32	10057	30MHz-6GHz	Jun 18, 2017	Jun 17, 2018
AC Power Source	HPC	HPA-500E	HPA-9100024	AC 0~300V	Jun 18, 2017	Jun 17, 2018
DC power Source	GW	GPC-6030D	C671845	DC 1V-60V	Jun 18, 2017	Jun 17, 2018
Temp. and Humidigy Chamber	Giant Force	GTH-225-20-S	MAB0103-00	N/A	Jun 18, 2017	Jun 17, 2018
RF CABLE-1m	JYE Bao	RG142	CB034-1m	20MHz-7GHz	Jun 18, 2017	Jun 17, 2018
RF CABLE-2m	JYE Bao	RG142	CB035-2m	20MHz-1GHz	Jun 18, 2017	Jun 17, 2018
Signal Generator	R&S	SMR40	10016	10MHz~40GHz	Jul 16, 2017	Jul 15, 2018
Universal Radio Communication Tester	R&S	CMU200	112012	N/A	Oct 27, 2016	Oct 26, 2017
Wideband Radia Communication Tester	R&S	CMW500	1201.0002K50	N/A	Nov 19, 2016	Nov 18, 2017
PSG Analog Signal Generator	Agilent	N8257D	MY46520521	250KHz~20GHz	Nov 19, 2016	Nov 18, 2017
MXA Signal Analyzer	Agilent	N9020A	MY50510140	10Hz~26.5GHz	Oct 27, 2016	Oct 26, 2017
RF Control Unit	Tonscend	JS0806-1	/	/	Nov 19,2016	Nov 18, 2017
LTE Test Software	Tonscend	JS1120-1	/	Version: 2.5.7.0	N/A	N/A
Test Software	Ascentest	AT890-SW	20141230	Version: 20160630	N/A	N/A
Splitter/Combiner(Qty: 2)	Mini-Circuits	ZAPD-50W 4.2-6.0 GHz	NN256400424	/	Oct 27, 2016	Oct 26, 2017
Splitter/Combine(Qty: 2)	MCLI	PS3-7	4463/4464	/	Oct 27, 2016	Oct 26, 2017
ATT (Qty: 1)	Mini-Circuits	VAT-30+	30912	/	Oct 27, 2016	Oct 26, 2017
EMC Test Software	Audix	E3	/	/	/	/

3.6 Measurement uncertainty

The data and results referenced in this document are true and accurate. The reader is cautioned that there may be errors within the calibration limits of the equipment and facilities. The measurement uncertainty was calculated for all measurements listed in this test report acc. to ETSI TR 100 028"Electromagnetic compatibilityand Radio spectrum Matters (ERM);Uncertainties in the measurementof mobile radio equipment characteristics" and is documented in the Shenzhen LCS Compliance Testing Laboratory Ltd.quality system acc. to DIN EN ISO/IEC 17025. Furthermore, component and process variability of devices similar to that tested may result in additional deviation. The manufacturer has the sole responsibility of continued compliance of the device.

Hereafter the best measurement capability for Shenzhen LCS Compliance Testing Laboratory Ltd. is reported:

Test	Range	Measurement Uncertainty	Notes
Radiated Emission	30~1000MHz	3.10 dB	(1)
Radiated Emission	1~18GHz	3.80 dB	(1)
Radiated Emission	18-40GHz	3.90 dB	(1)
Conducted Disturbance	0.15~30MHz	1.63 dB	(1)
Conducted Power	9KHz~18GHz	0.61 dB	(1)
Spurious RF Conducted Emission	9KHz~40GHz	1.22 dB	(1)
Band Edge Compliance of RF Emission	9KHz~40GHz	1.22 dB	(1)
Occuiped Bandwidth	9KHz~40GHz	-	(1)

(1)This uncertainty represents an expanded uncertainty expressed at approximately the 95% confidence level using a coverage factor of k=1.96.

4 TEST CONDITIONS AND RESULTS

4.1 Output Power

TEST APPLICABLE

During the process of testing, the EUT was controlled via R&S Digital Radio Communication tester (CMW500) to ensure max power transmission and proper modulation. This result contains output power and EIRP measurements for the EUT. In all cases, output power is within the specified limits.

4.1.1. Conducted Output Power

TEST CONFIGURATION

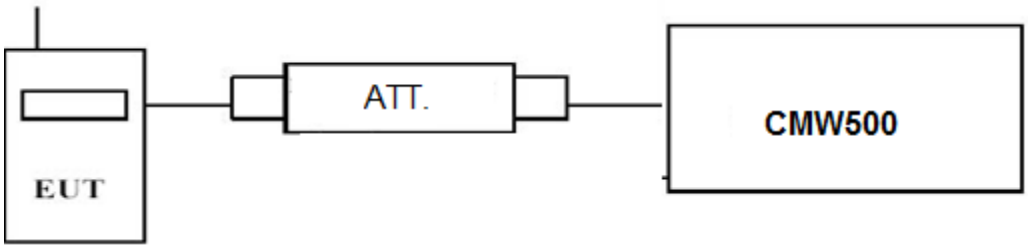

TEST PROCEDURE

Conducted Power Measurement:

a) Place the EUT on a bench and set it in transmitting mode.
b) Connect a low loss RF cable from the antenna port to a CMW500 by an Att.
c) EUT Communicate with CMW500 then selects a channel for testing.
d) Add a correction factor to the display CMW500, and then test.

TEST RESULTS

Remark:

1. *We were tested all RB Configuration refer 3GPP TS136 521 for each Channel Bandwidth of LTE FDD Band 2, LTE FDD Band 5, LTE FDD Band 7, LTE FDD Band 12;*
2. *For E-UTRA Band 2, please refer to Appendix A: Section A.1*
3. *For E-UTRA Band 5, please refer to Appendix B: Section B.1*
4. *For E-UTRA Band 7, please refer to Appendix C: Section C.1*
5. *For E-UTRA Band 12, please refer to Appendix D: Section D.1*

This report shall not be reproduced except in full, without the written approval of Shenzhen LCS Compliance Testing Laboratory Ltd.

4.1.2. Radiated Output Power

LIMIT

This is the test for the maximum radiated power from the EUT.
Per §22.913(2) Extend coverage on a secondary basis into cellular unserved areas, as those areas are defined in §22.949, the ERP of base transmitters and cellular repeaters of such systems must not exceed 1000 Watts. The ERP of mobile transmitters and auxiliary test transmitters must not exceed 7 Watts.
Rule Part 24.232(c) specifies, "Mobile/portable stations are limited to 2 watts e.i.r.p. Peak power" and 24.232(e) specifies that "Peak transmit power must be measured over any interval of continuous transmission using instrumentation calibrated in terms of an rms-equivalent voltage." .
Per Part 27.50(d) (4) specifies, Fixed, mobile, and portable (hand-held) stations operating in the 1710-1755MHz band are limited to 1W EIRP. Fixed stations operating in this band are limited to a maximum antenna height of 10 meters above ground. Mobile and portable stations operating in this band must employ a means for limiting power to the minimum necessary for successful communications.
Per Part 27.50(c) (10) specifies, Portable stations (hand-held devices) in the 600 MHz uplink band and the 698-746 MHz band, and fixed and mobile stations in the 600 MHz uplink band are limited to 3 watts ERP.
Per Part 27 (h) (2) specifies, Mobile stations are limited to 2.0 watts EIRP. All user stations are limited to 2.0 watts transmitter output power in the BRS and EBS:

TEST CONFIGURATION

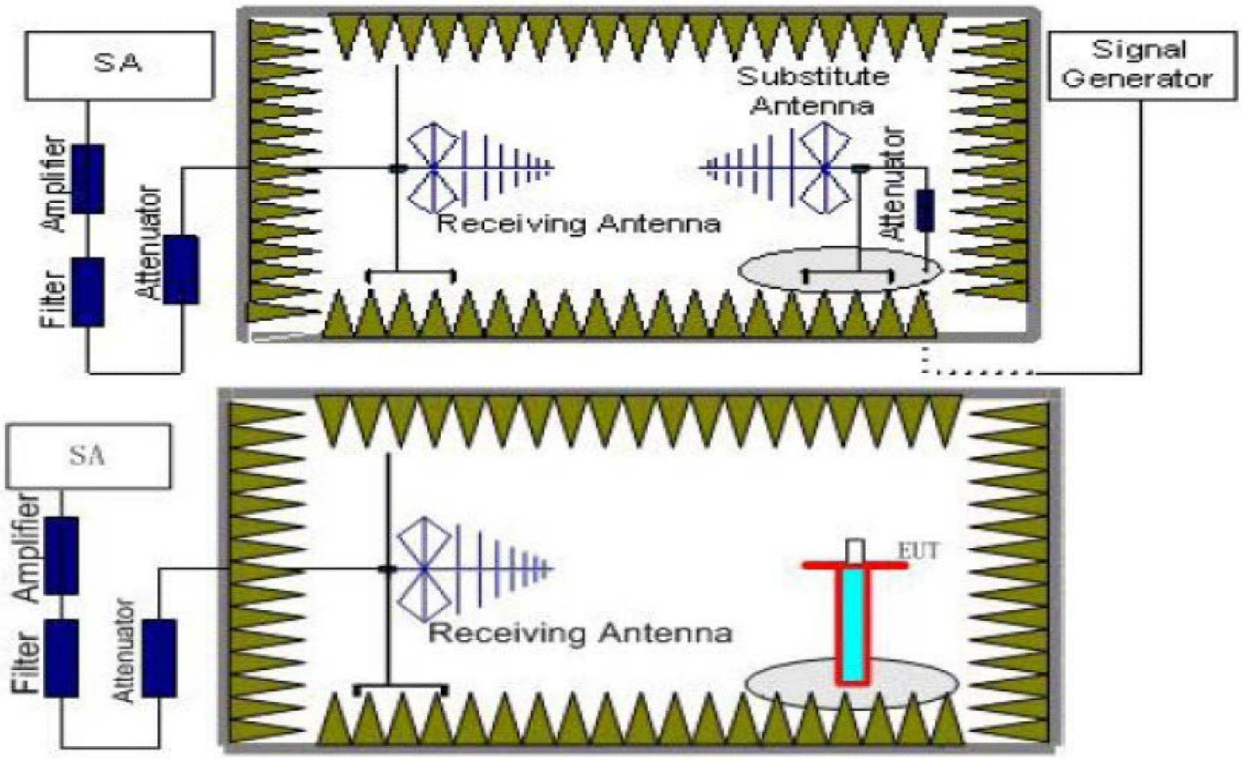

TEST PROCEDURE

1. EUT was placed on a 1.50 meter high non-conductive stand at a 3 meter test distance from the receive antenna. A receiving antenna was placed on the antenna mast 3 meters from the EUT for emission measurements. The height of receiving antenna is 1.50m. Detected emissions were maximized at each frequency by rotating the EUT through 360° and adjusting the receiving antenna polarization. The radiated emission measurements of all transmit frequencies in three channels (High, Middle, Low) were measured with peak detector.
2. A log-periodic antenna or double-ridged waveguide horn antenna shall be substituted in place of the EUT. The log-periodic antenna will be driven by a signal generator and the level will be adjusted till the same power value on the spectrum analyzer or receiver. The level of the spurious emissions can be calculated through the level of the signal generator, cable loss, the gain of the substitution antenna and the reading of the spectrum analyzer or receiver.

3. The EUT is then put into continuously transmitting mode at its maximum power level during the test.Set Test Receiver or Spectrum RBW=1MHz,VBW=3MHz, And the maximum value of the receiver should be recorded as (P_r).
4. The EUT shall be replaced by a substitution antenna.In the chamber, an substitution antenna for the frequency band of interest is placed at the reference point of the chamber. An RF Signal source for the frequency band of interest is connected to the substitution antenna with a cable that has been constructed to not interfere with the radiation pattern of the antenna. A power (P_{Mea}) is applied to the input of the substitution antenna, and adjust the level of the signal generator output until the value of the receiver reach the previously recorded (P_r). The power of signal source (P_{Mea}) is recorded. The test should be performed by rotating the test item and adjusting the receiving antenna polarization.
5. A amplifier should be connected to the Signal Source output port. And the cable should be connect between the Amplifier and the Substitution Antenna. The cable loss (P_{cl}) ,the Substitution Antenna Gain (G_a) and the Amplifier Gain (P_{Ag}) should be recorded after test.
   The measurement results are obtained as described below:
   Power(EIRP)=P_{Mea}+ P_{Ag} - P_{cl} + G_a
6. This value is EIRP since the measurement is calibrated using an antenna of known gain (2.15 dBi) and known input power.
7. ERP can be calculated from EIRP by subtracting the gain of the dipole, ERP = EIRP-2.15dBi.

TEST RESULTS

Radiated Measurement:

Remark:

1. *We were tested all RB Configuration refer 3GPP TS136 521 for each Channel Bandwidth of LTE FDD Band 2, LTE FDD Band 5, LTE FDD Band 7,LTE FDD Band 12; recorded worst case for each Channel Bandwidth of LTE FDD Band 2, LTE FDD Band 5, LTE FDD Band 7, LTE FDD Band 12.*
2. *EIRP=P_{Mea}(dBm)-P_{cl}(dB)+P_{Ag}(dB)+G_a(dBi)*
3. *ERP = EIRP – 2.15dBi as EIRP by subtracting the gain of the dipole.*
4. *Margin = Emission Level - Limit*
5. *We test the H direction and V direction recorded worst case*

LTE FDD Band 2_Channel Bandwidth 1.4MHz_QPSK

Frequency (MHz)	P_{Mea} (dBm)	P_{cl} (dB)	G_a Antenna Gain(dB)	P_{Ag} (dB)	Burst Average EIRP (dBm)	Limit (dBm)	Margin (dB)	Polarization
1850.70	-19.31	4.03	8.38	35.51	20.55	33.01	-12.46	V
1880.00	-19.64	4.08	8.33	35.56	20.17	33.01	-12.84	V
1909.30	-19.10	4.14	8.26	35.63	**20.65**	33.01	-12.36	V

LTE FDD Band 2_Channel Bandwidth 3MHz_QPSK

Frequency (MHz)	P_{Mea} (dBm)	P_{cl} (dB)	G_a Antenna Gain(dB)	P_{Ag} (dB)	Burst Average EIRP (dBm)	Limit (dBm)	Margin (dB)	Polarization
1851.50	-19.60	4.03	8.38	35.51	20.26	33.01	-12.75	V
1880.00	-19.70	4.08	8.33	35.56	20.11	33.01	-12.90	V
1908.50	-19.23	4.14	8.26	35.63	20.52	33.01	-12.49	V

LTE FDD Band 2_Channel Bandwidth 5MHz_QPSK

Frequency (MHz)	P_{Mea} (dBm)	P_{cl} (dB)	G_a Antenna Gain(dB)	P_{Ag} (dB)	Burst Average EIRP (dBm)	Limit (dBm)	Margin (dB)	Polarization
1852.50	-19.65	4.03	8.38	35.51	20.21	33.01	-12.80	V
1880.00	-19.76	4.08	8.33	35.56	20.05	33.01	-12.96	V
1907.50	-19.36	4.14	8.26	35.63	20.39	33.01	-12.62	V

This report shall not be reproduced except in full, without the written approval of Shenzhen LCS Compliance Testing Laboratory Ltd.

LTE FDD Band 2_Channel Bandwidth 10MHz_QPSK

Frequency (MHz)	P_{Mea} (dBm)	P_{cl} (dB)	G_a Antenna Gain(dB)	P_{Ag} (dB)	Burst Average EIRP (dBm)	Limit (dBm)	Margin (dB)	Polarization
1855.00	-19.81	4.03	8.38	35.51	20.05	33.01	-12.96	V
1880.00	-19.83	4.08	8.33	35.56	19.98	33.01	-13.03	V
1905.00	-19.52	4.14	8.26	35.63	20.23	33.01	-12.78	V

LTE FDD Band 2_Channel Bandwidth 15MHz_QPSK

Frequency (MHz)	P_{Mea} (dBm)	P_{cl} (dB)	G_a Antenna Gain(dB)	P_{Ag} (dB)	Burst Average EIRP (dBm)	Limit (dBm)	Margin (dB)	Polarization
1857.50	-19.98	4.03	8.38	35.51	19.88	33.01	-13.13	V
1880.00	-19.89	4.08	8.33	35.56	19.92	33.01	-13.09	V
1902.50	-19.69	4.14	8.26	35.63	20.06	33.01	-12.95	V

LTE FDD Band 2_Channel Bandwidth 20MHz_QPSK

Frequency (MHz)	P_{Mea} (dBm)	P_{cl} (dB)	G_a Antenna Gain(dB)	P_{Ag} (dB)	Burst Average EIRP (dBm)	Limit (dBm)	Margin (dB)	Polarization
1860.00	-20.10	4.03	8.38	35.51	19.76	33.01	-13.25	V
1880.00	-20.30	4.08	8.33	35.56	19.51	33.01	-13.50	V
1900.00	-19.82	4.14	8.26	35.63	**19.93**	33.01	-13.08	V

LTE FDD Band 2_Channel Bandwidth 1.4MHz_16QAM

Frequency (MHz)	P_{Mea} (dBm)	P_{cl} (dB)	G_a Antenna Gain(dB)	P_{Ag} (dB)	Burst Average EIRP (dBm)	Limit (dBm)	Margin (dB)	Polarization
1850.70	-19.53	4.03	8.38	35.51	**20.33**	33.01	-12.68	V
1880.00	-19.74	4.08	8.33	35.56	20.07	33.01	-12.94	V
1909.30	-20.26	4.14	8.26	35.63	19.49	33.01	-13.52	V

LTE FDD Band 2_Channel Bandwidth 3MHz_16QAM

Frequency (MHz)	P_{Mea} (dBm)	P_{cl} (dB)	G_a Antenna Gain(dB)	P_{Ag} (dB)	Burst Average EIRP (dBm)	Limit (dBm)	Margin (dB)	Polarization
1851.50	-19.80	4.03	8.38	35.51	20.06	33.01	-12.95	V
1880.00	-19.80	4.08	8.33	35.56	20.01	33.01	-13.00	V
1908.50	-20.33	4.14	8.26	35.63	19.42	33.01	-13.59	V

LTE FDD Band 2_Channel Bandwidth 5MHz_16QAM

Frequency (MHz)	P_{Mea} (dBm)	P_{cl} (dB)	G_a Antenna Gain(dB)	P_{Ag} (dB)	Burst Average EIRP (dBm)	Limit (dBm)	Margin (dB)	Polarization
1852.50	-19.98	4.03	8.38	35.51	19.88	33.01	-13.13	V
1880.00	-19.97	4.08	8.33	35.56	19.84	33.01	-13.17	V
1907.50	-20.46	4.14	8.26	35.63	19.29	33.01	-13.72	V

LTE FDD Band 2_Channel Bandwidth 10MHz_16QAM

Frequency (MHz)	P_{Mea} (dBm)	P_{cl} (dB)	G_a Antenna Gain(dB)	P_{Ag} (dB)	Burst Average EIRP (dBm)	Limit (dBm)	Margin (dB)	Polarization
1855.00	-20.05	4.03	8.38	35.51	19.81	33.01	-13.20	V
1880.00	-20.16	4.08	8.33	35.56	19.65	33.01	-13.36	V
1905.00	-20.58	4.14	8.26	35.63	19.17	33.01	-13.84	V

This report shall not be reproduced except in full, without the written approval of Shenzhen LCS Compliance Testing Laboratory Ltd.

LTE FDD Band 2_Channel Bandwidth 15MHz_16QAM

Frequency (MHz)	P_{Mea} (dBm)	P_{cl} (dB)	G_a Antenna Gain(dB)	P_{Ag} (dB)	Burst Average EIRP (dBm)	Limit (dBm)	Margin (dB)	Polarization
1857.50	-20.20	4.03	8.38	35.51	19.66	33.01	-13.35	V
1880.00	-20.28	4.08	8.33	35.56	19.53	33.01	-13.48	V
1902.50	-20.70	4.14	8.26	35.63	19.05	33.01	-13.96	V

LTE FDD Band 2_Channel Bandwidth 20MHz_16QAM

Frequency (MHz)	P_{Mea} (dBm)	P_{cl} (dB)	G_a Antenna Gain(dB)	P_{Ag} (dB)	Burst Average EIRP (dBm)	Limit (dBm)	Margin (dB)	Polarization
1860.00	-20.44	4.03	8.38	35.51	**19.42**	33.01	-13.59	V
1880.00	-20.45	4.08	8.33	35.56	19.36	33.01	-13.65	V
1900.00	-20.81	4.14	8.26	35.63	18.94	33.01	-14.07	V

LTE FDD Band 5_Channel Bandwidth 1.4MHz_QPSK

Frequency (MHz)	P_{Mea} (dBm)	P_{cl} (dB)	G_a Antenna Gain (dB)	Correction (dB)	P_{Ag} (dB)	Burst Average ERP (dBm)	Limit (dBm)	Margin (dB)	Polarization
824.70	-15.62	3.45	8.45	2.15	33.79	21.02	38.45	-17.43	V
836.50	-14.78	3.49	8.45	2.15	33.85	**21.88**	38.45	-16.57	V
848.30	-15.19	3.55	8.36	2.15	33.88	21.35	38.45	-17.10	V

LTE FDD Band 5_Channel Bandwidth 3MHz_QPSK

Frequency (MHz)	P_{Mea} (dBm)	P_{cl} (dB)	G_a Antenna Gain (dB)	Correction (dB)	P_{Ag} (dB)	Burst Average ERP (dBm)	Limit (dBm)	Margin (dB)	Polarization
825.50	-15.78	3.45	8.45	2.15	33.79	20.86	38.45	-17.59	V
836.50	-15.12	3.49	8.45	2.15	33.85	21.54	38.45	-16.91	V
847.50	-15.33	3.55	8.36	2.15	33.88	21.21	38.45	-17.24	V

LTE FDD Band 5_Channel Bandwidth 5MHz_QPSK

Frequency (MHz)	P_{Mea} (dBm)	P_{cl} (dB)	G_a Antenna Gain (dB)	Correction (dB)	P_{Ag} (dB)	Burst Average ERP (dBm)	Limit (dBm)	Margin (dB)	Polarization
826.50	-16.12	3.45	8.45	2.15	33.79	20.52	38.45	-17.93	V
836.50	-15.47	3.49	8.45	2.15	33.85	21.19	38.45	-17.26	V
846.50	-15.71	3.55	8.36	2.15	33.88	20.83	38.45	-17.62	V

LTE FDD Band 5_Channel Bandwidth 10MHz_QPSK

Frequency (MHz)	P_{Mea} (dBm)	P_{cl} (dB)	G_a Antenna Gain (dB)	Correction (dB)	P_{Ag} (dB)	Burst Average ERP (dBm)	Limit (dBm)	Margin (dB)	Polarization
829.00	-16.48	3.45	8.45	2.15	33.79	20.16	38.45	-18.29	V
836.50	-15.70	3.49	8.45	2.15	33.85	**20.96**	38.45	-17.49	V
844.00	-16.10	3.55	8.36	2.15	33.88	20.44	38.45	-18.01	V

LTE FDD Band 5_Channel Bandwidth 1.4MHz_16QAM

Frequency (MHz)	P_{Mea} (dBm)	P_{cl} (dB)	G_a Antenna Gain (dB)	Correction (dB)	P_{Ag} (dB)	Burst Average ERP (dBm)	Limit (dBm)	Margin (dB)	Polarization
824.70	-16.45	3.45	8.45	2.15	33.79	20.19	38.45	-18.26	V
836.50	-15.74	3.49	8.45	2.15	33.85	**20.92**	38.45	-17.53	V
848.30	-15.98	3.55	8.36	2.15	33.88	20.56	38.45	-17.89	V

This report shall not be reproduced except in full, without the written approval of Shenzhen LCS Compliance Testing Laboratory Ltd.

LTE FDD Band 5_Channel Bandwidth 3MHz_16QAM

Frequency (MHz)	P_{Mea} (dBm)	P_{cl} (dB)	G_a Antenna Gain (dB)	Correction (dB)	P_{Ag} (dB)	Burst Average ERP (dBm)	Limit (dBm)	Margin (dB)	Polarization
825.50	-16.57	3.45	8.45	2.15	33.79	20.07	38.45	-18.38	V
836.50	-16.04	3.49	8.45	2.15	33.85	20.62	38.45	-17.83	V
847.50	-16.21	3.55	8.36	2.15	33.88	20.33	38.45	-18.12	V

LTE FDD Band 5_Channel Bandwidth 5MHz_16QAM

Frequency (MHz)	P_{Mea} (dBm)	P_{cl} (dB)	G_a Antenna Gain (dB)	Correction (dB)	P_{Ag} (dB)	Burst Average ERP (dBm)	Limit (dBm)	Margin (dB)	Polarization
826.50	-16.81	3.45	8.45	2.15	33.79	19.83	38.45	-18.62	V
836.50	-16.31	3.49	8.45	2.15	33.85	20.35	38.45	-18.10	V
846.50	-16.47	3.55	8.36	2.15	33.88	20.07	38.45	-18.38	V

LTE FDD Band 5_Channel Bandwidth 10MHz_16QAM

Frequency (MHz)	P_{Mea} (dBm)	P_{cl} (dB)	G_a Antenna Gain (dB)	Correction (dB)	P_{Ag} (dB)	Burst Average ERP (dBm)	Limit (dBm)	Margin (dB)	Polarization
829.00	-17.07	3.45	8.45	2.15	33.79	19.57	38.45	-18.88	V
836.50	-16.61	3.49	8.45	2.15	33.85	**20.05**	38.45	-18.40	V
844.00	-16.72	3.55	8.36	2.15	33.88	19.82	38.45	-18.63	V

LTE FDD Band 7_Channel Bandwidth 5MHz_QPSK

Frequency (MHz)	P_{Mea} (dBm)	P_{cl} (dB)	G_a Antenna Gain(dB)	P_{Ag} (dB)	Burst Average EIRP (dBm)	Limit (dBm)	Margin (dB)	Polarization
2502.50	-18.18	4.32	6.80	36.14	20.44	30.00	-9.56	V
2535.00	-17.60	4.32	6.61	36.17	**20.86**	30.00	-9.14	V
2567.50	-18.29	4.33	6.57	36.22	20.17	30.00	-9.83	V

LTE FDD Band 7_Channel Bandwidth 10MHz_QPSK

Frequency (MHz)	P_{Mea} (dBm)	P_{cl} (dB)	G_a Antenna Gain(dB)	P_{Ag} (dB)	Burst Average EIRP (dBm)	Limit (dBm)	Margin (dB)	Polarization
2505.00	-18.51	4.32	6.80	36.14	20.11	30.00	-9.89	V
2535.00	-17.97	4.32	6.61	36.17	20.49	30.00	-9.51	V
2565.00	-18.44	4.33	6.57	36.22	20.02	30.00	-9.98	V

LTE FDD Band 7_Channel Bandwidth 15MHz_ QPSK

Frequency (MHz)	P_{Mea} (dBm)	P_{cl} (dB)	G_a Antenna Gain(dB)	P_{Ag} (dB)	Burst Average EIRP (dBm)	Limit (dBm)	Margin (dB)	Polarization
2507.50	-18.66	4.32	6.80	36.14	19.96	30.00	-10.04	V
2535.00	-18.24	4.32	6.61	36.17	20.22	30.00	-9.78	V
2562.50	-18.61	4.33	6.57	36.22	19.85	30.00	-10.15	V

LTE FDD Band 7_Channel Bandwidth 20MHz_ QPSK

Frequency (MHz)	P_{Mea} (dBm)	P_{cl} (dB)	G_a Antenna Gain(dB)	P_{Ag} (dB)	Burst Average EIRP (dBm)	Limit (dBm)	Margin (dB)	Polarization
2510.00	-19.23	4.32	6.80	36.14	19.39	30.00	-10.61	V
2535.00	-18.45	4.32	6.61	36.17	**20.01**	30.00	-9.99	V
2560.00	-18.99	4.33	6.57	36.22	19.47	30.00	-10.53	V

This report shall not be reproduced except in full, without the written approval of Shenzhen LCS Compliance Testing Laboratory Ltd.

LTE FDD Band 7_Channel Bandwidth 5MHz_16QAM

Frequency (MHz)	P_{Mea} (dBm)	P_{cl} (dB)	G_a Antenna Gain(dB)	P_{Ag} (dB)	Burst Average EIRP (dBm)	Limit (dBm)	Margin (dB)	Polarization
2502.50	-19.17	4.32	6.80	36.14	19.45	30.00	-10.55	V
2535.00	-18.55	4.32	6.61	36.17	**19.91**	30.00	-10.09	V
2567.50	-18.83	4.33	6.57	36.22	19.63	30.00	-10.37	V

LTE FDD Band 7_Channel Bandwidth 10MHz_16QAM

Frequency (MHz)	P_{Mea} (dBm)	P_{cl} (dB)	G_a Antenna Gain(dB)	P_{Ag} (dB)	Burst Average EIRP (dBm)	Limit (dBm)	Margin (dB)	Polarization
2505.00	-19.43	4.32	6.80	36.14	19.19	30.00	-10.81	V
2535.00	-18.80	4.32	6.61	36.17	19.66	30.00	-10.34	V
2565.00	-19.14	4.33	6.57	36.22	19.32	30.00	-10.68	V

LTE FDD Band 7_Channel Bandwidth 15MHz_ 16QAM

Frequency (MHz)	P_{Mea} (dBm)	P_{cl} (dB)	G_a Antenna Gain(dB)	P_{Ag} (dB)	Burst Average EIRP (dBm)	Limit (dBm)	Margin (dB)	Polarization
2507.50	-19.61	4.32	6.80	36.14	19.01	30.00	-10.99	V
2535.00	-19.03	4.32	6.61	36.17	19.43	30.00	-10.57	V
2562.50	-19.35	4.33	6.57	36.22	19.11	30.00	-10.89	V

LTE FDD Band 7_Channel Bandwidth 20MHz_ 16QAM

Frequency (MHz)	P_{Mea} (dBm)	P_{cl} (dB)	G_a Antenna Gain(dB)	P_{Ag} (dB)	Burst Average EIRP (dBm)	Limit (dBm)	Margin (dB)	Polarization
2510.00	-19.77	4.32	6.80	36.14	18.85	30.00	-11.15	V
2535.00	-19.19	4.32	6.61	36.17	**19.27**	30.00	-10.73	V
2560.00	-19.47	4.33	6.57	36.22	18.99	30.00	-11.01	V

LTE FDD Band 12_Channel Bandwidth 1.4MHz_QPSK

Frequency (MHz)	P_{Mea} (dBm)	P_{cl} (dB)	G_a Antenna Gain (dB)	Correction (dB)	P_{Ag} (dB)	Burst Average ERP (dBm)	Limit (dBm)	Margin (dB)	Polarization
699.70	-14.66	3.01	8.29	2.15	33.52	21.99	34.77	-12.78	V
707.50	-14.03	3.02	8.29	2.15	33.52	**22.61**	34.77	-12.16	V
715.30	-14.93	3.06	8.29	2.15	33.52	21.67	34.77	-13.10	V

LTE FDD Band 12_Channel Bandwidth 3MHz_QPSK

Frequency (MHz)	P_{Mea} (dBm)	P_{cl} (dB)	G_a Antenna Gain (dB)	Correction (dB)	P_{Ag} (dB)	Burst Average ERP (dBm)	Limit (dBm)	Margin (dB)	Polarization
700.50	-14.94	3.01	8.29	2.15	33.52	21.71	34.77	-13.06	V
707.50	-14.39	3.02	8.29	2.15	33.52	22.25	34.77	-12.52	V
714.50	-15.16	3.06	8.29	2.15	33.52	21.44	34.77	-13.33	V

LTE FDD Band 12_Channel Bandwidth 5MHz_QPSK

Frequency (MHz)	P_{Mea} (dBm)	P_{cl} (dB)	G_a Antenna Gain (dB)	Correction (dB)	P_{Ag} (dB)	Burst Average ERP (dBm)	Limit (dBm)	Margin (dB)	Polarization
701.50	-15.31	3.01	8.29	2.15	33.52	21.34	34.77	-13.43	V
707.50	-14.62	3.02	8.29	2.15	33.52	22.02	34.77	-12.75	V
713.50	-15.44	3.06	8.29	2.15	33.52	21.16	34.77	-13.61	V

This report shall not be reproduced except in full, without the written approval of Shenzhen LCS Compliance Testing Laboratory Ltd.

LTE FDD Band 12_Channel Bandwidth 10MHz_QPSK

Frequency (MHz)	P_{Mea} (dBm)	P_{cl} (dB)	G_a Antenna Gain (dB)	Correction (dB)	P_{Ag} (dB)	Burst Average ERP (dBm)	Limit (dBm)	Margin (dB)	Polarization
704.00	-15.60	3.01	8.29	2.15	33.52	21.05	34.77	-13.72	V
707.50	-14.85	3.02	8.29	2.15	33.52	**21.79**	34.77	-12.98	V
711.00	-15.74	3.06	8.29	2.15	33.52	20.86	34.77	-13.91	V

LTE FDD Band 12_Channel Bandwidth 1.4MHz_16QAM

Frequency (MHz)	P_{Mea} (dBm)	P_{cl} (dB)	G_a Antenna Gain (dB)	Correction (dB)	P_{Ag} (dB)	Burst Average ERP (dBm)	Limit (dBm)	Margin (dB)	Polarization
699.70	-15.79	3.01	8.29	2.15	33.52	20.86	34.77	-13.91	V
707.50	-14.72	3.02	8.29	2.15	33.52	**21.92**	34.77	-12.85	V
715.30	-15.37	3.06	8.29	2.15	33.52	21.23	34.77	-13.54	V

LTE FDD Band 12_Channel Bandwidth 3MHz_16QAM

Frequency (MHz)	P_{Mea} (dBm)	P_{cl} (dB)	G_a Antenna Gain (dB)	Correction (dB)	P_{Ag} (dB)	Burst Average ERP (dBm)	Limit (dBm)	Margin (dB)	Polarization
700.50	-16.26	3.01	8.29	2.15	33.52	20.39	34.77	-14.38	V
707.50	-15.17	3.02	8.29	2.15	33.52	21.47	34.77	-13.30	V
714.50	-15.54	3.06	8.29	2.15	33.52	21.06	34.77	-13.71	V

LTE FDD Band 12_Channel Bandwidth 5MHz_16QAM

Frequency (MHz)	P_{Mea} (dBm)	P_{cl} (dB)	G_a Antenna Gain (dB)	Correction (dB)	P_{Ag} (dB)	Burst Average ERP (dBm)	Limit (dBm)	Margin (dB)	Polarization
701.50	-16.57	3.01	8.29	2.15	33.52	20.08	34.77	-14.69	V
707.50	-15.51	3.02	8.29	2.15	33.52	21.13	34.77	-13.64	V
713.50	-15.83	3.06	8.29	2.15	33.52	20.77	34.77	-14.00	V

LTE FDD Band 12_Channel Bandwidth 10MHz_16QAM

Frequency (MHz)	P_{Mea} (dBm)	P_{cl} (dB)	G_a Antenna Gain (dB)	Correction (dB)	P_{Ag} (dB)	Burst Average ERP (dBm)	Limit (dBm)	Margin (dB)	Polarization
704.00	-16.22	3.01	8.29	2.15	33.52	20.43	34.77	-14.34	V
707.50	-16.30	3.02	8.29	2.15	33.52	20.34	34.77	-14.43	V
711.00	-16.06	3.06	8.29	2.15	33.52	20.54	34.77	-14.23	V

This report shall not be reproduced except in full, without the written approval of Shenzhen LCS Compliance Testing Laboratory Ltd.

4.2 Peak-to-Average Ratio (PAR)

LIMIT

The Peak-to-Average Ratio (PAR) of the transmission may not exceed 13 dB.

TEST CONFIGURATION

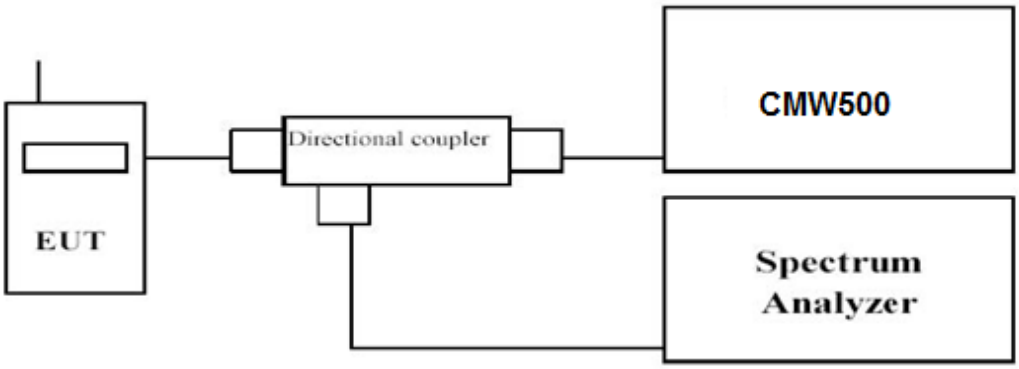

TEST PROCEDURE

1. Refer to instrument's analyzer instruction manual for details on how to use the power statistics/CCDF function;
2. Set resolution/measurement bandwidth ≥ signal's occupied bandwidth;
3. Set the number of counts to a value that stabilizes the measured CCDF curve;
4. Set the measurement interval as follows:
   1). for continuous transmissions, set to 1 ms,
   2). for burst transmissions, employ an external trigger that is synchronized with the EUT burst timing sequence, or use the internal burst trigger with a trigger level that allows the burst to stabilize and set the measurement interval to a time that is less than or equal to the burst duration.
5. Record the maximum PAPR level associated with a probability of 0.1%.

TEST RESULTS

Remark:

1. *We were tested all RB Configuration refer 3GPP TS136 521 for each Channel Bandwidth of LTE FDD Band 2, LTE FDD Band 5, LTE FDD Band 7,LTE FDD Band 12;*
2. *For E-UTRA Band 2, please refer to Appendix A: Section A.2*
3. *For E-UTRA Band 5, please refer to Appendix B: Section B.2*
4. *For E-UTRA Band 7, please refer to Appendix C: Section C.2*
5. *For E-UTRA Band 12, please refer to Appendix D: Section D.2*

This report shall not be reproduced except in full, without the written approval of Shenzhen LCS Compliance Testing Laboratory Ltd.

4.3 Occupied Bandwidth and Emission Bandwidth

LIMIT

N/A

TEST CONFIGURATION

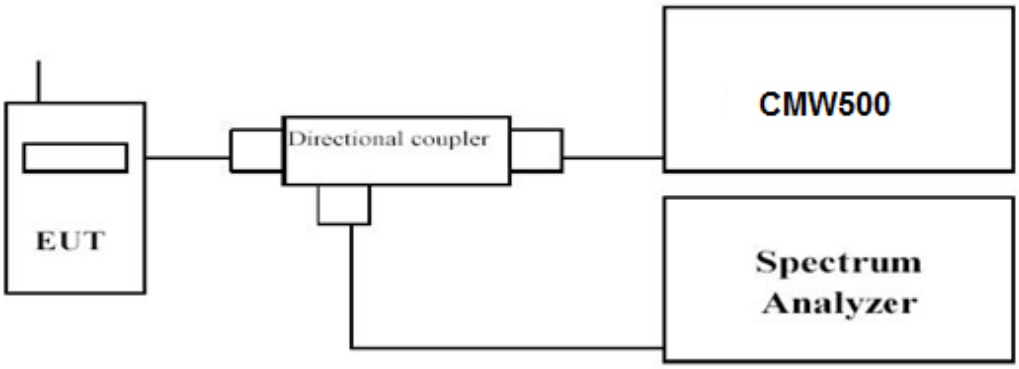

TEST PROCEDURE

The transmitter output was connected to a calibrated coaxial cable and coupler, the other end of which was connected to a spectrum analyzer. The occupied bandwidth was measured with the spectrum analyzer at low, middle and high channel in each band. The -26dBc Emission bandwidth was also measured and recorded. Set RBW was set to about 1% of emission BW, VBW≥3 times RBW.
-26dBc display line was placed on the screen (or 99% bandwidth), the occupied bandwidth is the delta frequency between the two points where the display line intersects the signal trace.

TEST RESULTS

Remark:
1. *We were tested all RB Configuration refer 3GPP TS136 521 for each Channel Bandwidth of LTE FDD Band 2, LTE FDD Band 5, LTE FDD Band 7, LTE FDD Band 12;*
2. *For E-UTRA Band 2, please refer to Appendix A: Section A.3*
3. *For E-UTRA Band 5, please refer to Appendix B: Section B.3*
4. *For E-UTRA Band 7, please refer to Appendix C: Section C.3*
5. *For E-UTRA Band 12, please refer to Appendix D: Section D.3*

This report shall not be reproduced except in full, without the written approval of Shenzhen LCS Compliance Testing Laboratory Ltd.

4.4 Band Edge compliance

LIMIT

For LTE FDD Band 2: Per FCC §24.238 the power of any emission outside of the authorized operating frequency ranges must be attenuated below the transmitting power (P) by a factor of at least 43 + 10log(P) dB.
For LTE FDD Band 5: Per §22.917: The power of any emission outside of the authorized operating frequency ranges must be attenuated below the transmitting power (P) by a factor of at least 43 + 10 log(P) dB.
For LTE FDD Band 7: Per Part §27.53(m) (4) specify that For mobile digital stations, the attenuation factor shall be not less than 40 + 10 log (P) dB on all frequencies between the channel edge and 5 megahertz from the channel edge, 43 + 10 log (P) dB on all frequencies between 5 megahertz and X megahertz from the channel edge, and 55 + 10 log (P) dB on all frequencies more than X megahertz from the channel edge, where X is the greater of 6 megahertz or the actual emission bandwidth as defined in paragraph (m)(6) of this section. In addition, the attenuation factor shall not be less that 43 + 10 log (P) dB on all frequencies between 2490.5 MHz and 2496 MHz and 55 + 10 log (P) dB at or below 2490.5 MHz. Mobile Satellite Service licensees operating on frequencies below 2495 MHz may also submit a documented interference complaint against BRS licensees operating on channel BRS Channel 1 on the same terms and conditions as adjacent channel BRS or EBS licensees.
For LTE FDD Band 12: Per §27.53(g) specify that for operations in the 600 MHz band and the 698-746 MHz band, the power of any emission outside a licensee's frequency band(s) of operation shall be attenuated below the transmitter power (P) within the licensed band(s) of operation, measured in watts, by at least 43 + 10 log (P) dB. Compliance with this provision is based on the use of measurement instrumentation employing a resolution bandwidth of 100 kilohertz or greater. However, in the 100 kilohertz bands immediately outside and adjacent to a licensee's frequency block, a resolution bandwidth of at least 30 kHz may be employed.

TEST CONFIGURATION

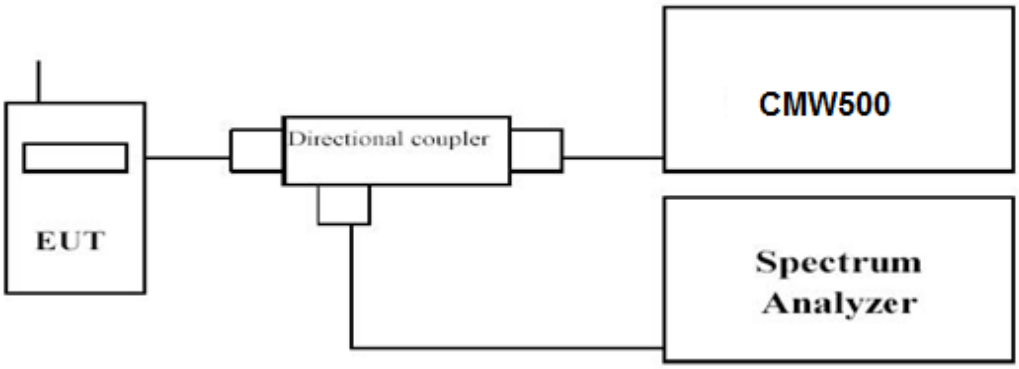

TEST PROCEDURE

1. The transmitter output port was connected to base station.
2. The RF output of EUT was connected to the power meter by RF cable and attenuator, the path loss was compensated to the results for each measurement.
3. Set EUT at maximum power through base station.
4. Select lowestand highest channels for each band and different modulation.
5. Measure Band edge using RMS (Average) detector by spectrum

TEST RESULTS

Remark:
1. *We were tested all RB Configuration refer 3GPP TS136 521 for each Channel Bandwidth of LTE FDD Band 2, LTE FDD Band 5, LTE FDD Band 7,LTE FDD Band 12;*
2. *For E-UTRA Band 2, please refer to Appendix A: Section A.4*
3. *For E-UTRA Band 5, please refer to Appendix B: Section B.4*
4. *For E-UTRA Band 7, please refer to Appendix C: Section C.4*
5. *For E-UTRA Band 12, please refer to Appendix D: Section D.4*

This report shall not be reproduced except in full, without the written approval of Shenzhen LCS Compliance Testing Laboratory Ltd.

4.5 Spurious Emssion on Antenna Port

LIMIT

For LTE FDD Band 2: Per FCC §24.238 the power of any emission outside of the authorized operating frequency ranges must be attenuated below the transmitting power (P) by a factor of at least 43 + 10log(P) dB.
For LTE FDD Band 5: Per §22.917: The power of any emission outside of the authorized operating frequency ranges must be attenuated below the transmitting power (P) by a factor of at least 43 + 10 log(P) dB.
For LTE FDD Band 7: Per Part §27.53(m) (4) specify that For mobile digital stations, the attenuation factor shall be not less than 40 + 10 log (P) dB on all frequencies between the channel edge and 5 megahertz from the channel edge, 43 + 10 log (P) dB on all frequencies between 5 megahertz and X megahertz from the channel edge, and 55 + 10 log (P) dB on all frequencies more than X megahertz from the channel edge, where X is the greater of 6 megahertz or the actual emission bandwidth as defined in paragraph (m)(6) of this section. In addition, the attenuation factor shall not be less that 43 + 10 log (P) dB on all frequencies between 2490.5 MHz and 2496 MHz and 55 + 10 log (P) dB at or below 2490.5 MHz. Mobile Satellite Service licensees operating on frequencies below 2495 MHz may also submit a documented interference complaint against BRS licensees operating on channel BRS Channel 1 on the same terms and conditions as adjacent channel BRS or EBS licensees.
For LTE FDD Band 12: Per §27.53(g) specify that for operations in the 600 MHz band and the 698-746 MHz band, the power of any emission outside a licensee's frequency band(s) of operation shall be attenuated below the transmitter power (P) within the licensed band(s) of operation, measured in watts, by at least 43 + 10 log (P) dB. Compliance with this provision is based on the use of measurement instrumentation employing a resolution bandwidth of 100 kilohertz or greater. However, in the 100 kilohertz bands immediately outside and adjacent to a licensee's frequency block, a resolution bandwidth of at least 30 kHz may be employed.

TEST CONFIGURATION

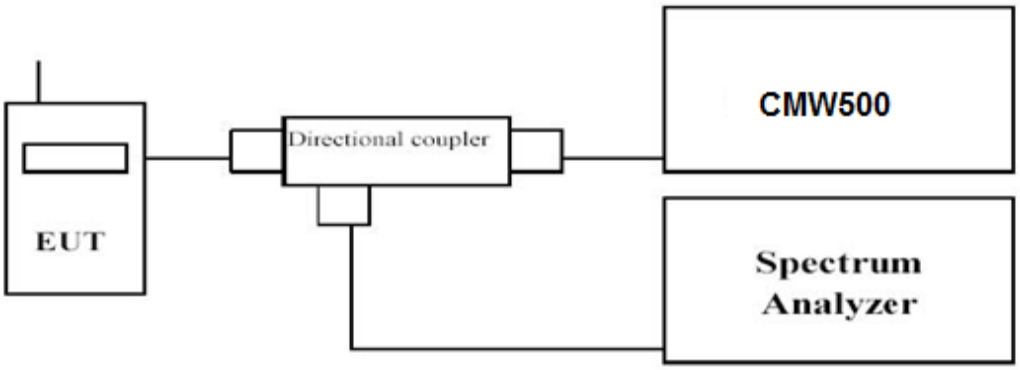

TEST PROCEDURE

The EUT was setup according to EIA/TIA 603D

a. Place the EUT on a bench and set it in transmitting mode.
b. Connect a low loss RF cable from the antenna port to a spectrum analyzer and CMW500 by a Directional Couple.
c. EUT Communicate with CMW500, then select a channel for testing.
d. Add a correction factor to the display of spectrum, and then test.
e. The resolution bandwidth of the spectrum analyzer was setsufficient scans were taken to show the out of band Emission if any up to10th harmonic.
f. Please refer to following tables for test antenna conducted emissions.

Working Frequency	Sub range (GHz)	RBW	VBW	Sweep time (s)
LTE FDD Band 2	0.000009~0.000015	1KHz	3KHz	Auto
	0.000015~0.03	10KHz	30KHz	Auto
	0.03~26	1 MHz	3 MHz	Auto
LTE FDD Band 5	0.000009~0.000015	1KHz	3KHz	Auto
	0.000015~0.03	10KHz	30KHz	Auto
	0.03~26	1 MHz	3 MHz	Auto
LTE FDD Band 7	0.000009~0.000015	1KHz	3KHz	Auto
	0.000015~0.03	10KHz	30KHz	Auto
	0.03~26	1 MHz	3 MHz	Auto
LTE FDD Band 12	0.000009~0.000015	1KHz	3KHz	Auto
	0.000015~0.03	10KHz	30KHz	Auto
	0.03~26	1 MHz	3 MHz	Auto

TEST RESULTS

Remark:

1. *We were tested all RB Configuration refer 3GPP TS136 521 for each Channel Bandwidth of LTE FDD Band 2, LTE FDD Band 5, LTE FDD Band 7,LTE FDD Band 12;*
2. *For E-UTRA Band 2, please refer to Appendix A: Section A.5*
3. *For E-UTRA Band 5, please refer to Appendix B: Section B.5*
4. *For E-UTRA Band 7, please refer to Appendix C: Section C.5*
5. *For E-UTRA Band 12, please refer to Appendix D: Section D.5*

This report shall not be reproduced except in full, without the written approval of Shenzhen LCS Compliance Testing Laboratory Ltd.

4.6 Radiated Spurious Emssion

LIMIT

For LTE FDD Band 2: Per FCC §24.238 the power of any emission outside of the authorized operating frequency ranges must be attenuated below the transmitting power (P) by a factor of at least 43 + 10log(P) dB.
For LTE FDD Band 5: Per §22.917: The power of any emission outside of the authorized operating frequency ranges must be attenuated below the transmitting power (P) by a factor of at least 43 + 10 log(P) dB.
For LTE FDD Band 7: Per Part §27.53(m) (4) specify that For mobile digital stations, the attenuation factor shall be not less than 40 + 10 log (P) dB on all frequencies between the channel edge and 5 megahertz from the channel edge, 43 + 10 log (P) dB on all frequencies between 5 megahertz and X megahertz from the channel edge, and 55 + 10 log (P) dB on all frequencies more than X megahertz from the channel edge, where X is the greater of 6 megahertz or the actual emission bandwidth as defined in paragraph (m)(6) of this section. In addition, the attenuation factor shall not be less that 43 + 10 log (P) dB on all frequencies between 2490.5 MHz and 2496 MHz and 55 + 10 log (P) dB at or below 2490.5 MHz. Mobile Satellite Service licensees operating on frequencies below 2495 MHz may also submit a documented interference complaint against BRS licensees operating on channel BRS Channel 1 on the same terms and conditions as adjacent channel BRS or EBS licensees.
For LTE FDD Band 12: Per §27.53(g) specify that for operations in the 600 MHz band and the 698-746 MHz band, the power of any emission outside a licensee's frequency band(s) of operation shall be attenuated below the transmitter power (P) within the licensed band(s) of operation, measured in watts, by at least 43 + 10 log (P) dB. Compliance with this provision is based on the use of measurement instrumentation employing a resolution bandwidth of 100 kilohertz or greater. However, in the 100 kilohertz bands immediately outside and adjacent to a licensee's frequency block, a resolution bandwidth of at least 30 kHz may be employed.

TEST CONFIGURATION

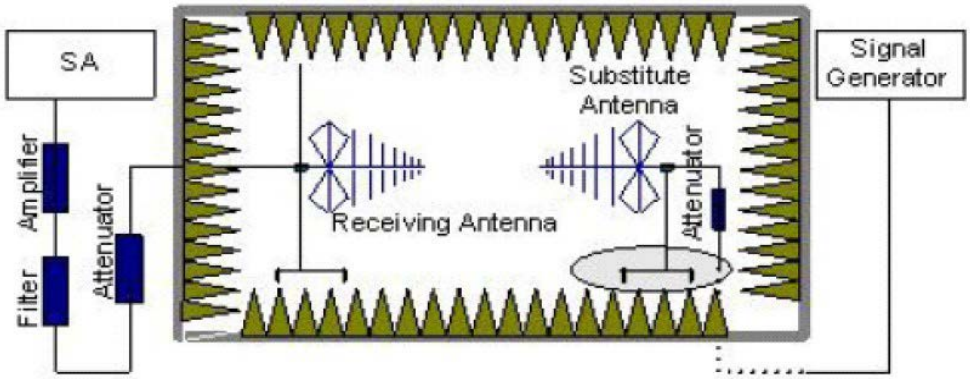

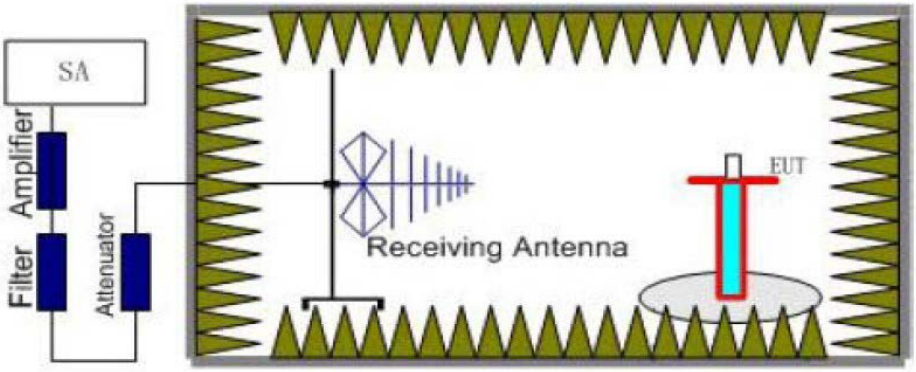

TEST PROCEDURE

1. EUT was placed on a 1.50 meter high non-conductive stand at a 3 meter test distance from the receive antenna. A receiving antenna was placed on the antenna mast 3 meters from the EUT for emission measurements. The height of receiving antenna is 1.50m. Detected emissions were maximized at each frequency by rotating the EUT through 360° and adjusting the receiving antenna polarization. The radiated emission measurements of all transmit frequencies in three channels (High, Middle, Low) were measured with peak detector.

2. A log-periodic antenna or double-ridged waveguide horn antenna shall be substituted in place of the EUT. The log-periodic antenna will be driven by a signal generator and the level will be adjusted till the same power value on the spectrum analyzer or receiver. The level of the spurious emissions can be calculated through the level of the signal generator, cable loss, the gain of the substitution antenna and the reading of the spectrum analyzer or receiver.
3. The EUT is then put into continuously transmitting mode at its maximum power level during the test.Set Test Receiver or Spectrum RBW=1MHz,VBW=3MHz, And the maximum value of the receiver should be recorded as (P_r).
4. The EUT shall be replaced by a substitution antenna.In the chamber, an substitution antenna for the frequency band of interest is placed at the reference point of the chamber. An RF Signal source for the frequency band of interest is connected to the substitution antenna with a cable that has been constructed to not interfere with the radiation pattern of the antenna. A power (P_{Mea}) is applied to the input of the substitution antenna, and adjust the level of the signal generator output until the value of the receiver reach the previously recorded (P_r). The power of signal source (P_{Mea}) is recorded. The test should be performed by rotating the test item and adjusting the receiving antenna polarization.
5. A amplifier should be connected to the Signal Source output port. And the cable should be connect between the Amplifier and the Substitution Antenna. The cable loss (P_{cl}) ,the Substitution Antenna Gain (G_a) and the Amplifier Gain (P_{Ag}) should be recorded after test.
   The measurement results are obtained as described below:
   Power(EIRP)=P_{Mea}+ P_{Ag} - P_{cl} + G_a
6. This value is EIRP since the measurement is calibrated using an antenna of known gain (2.15 dBi) and known input power.
7. ERP can be calculated from EIRP by subtracting the gain of the dipole, ERP = EIRP -2.15dBi.
8. In order to make sure test results more clearly,we set frequency range and sweep time for difference frequency range as follows table:

Working Frequency	Subrange (GHz)	RBW	VBW	Sweep time (s)
LTE FDD Band 2	0.00009~0.15	1KHz	3KHz	30
	0.00015~0.03	10KHz	30KHz	10
	0.03~1	100KHz	300KHz	10
	1~2	1 MHz	3 MHz	2
	2~5	1 MHz	3 MHz	3
	5~8	1 MHz	3 MHz	3
	8~11	1 MHz	3 MHz	3
	11~14	1 MHz	3 MHz	3
	14~18	1 MHz	3 MHz	3
	18~20	1 MHz	3 MHz	2
LTE FDD Band 5	0.00009~0.15	1KHz	3KHz	30
	0.00015~0.03	10KHz	30KHz	10
	0.03~1	100KHz	300KHz	10
	1~2	1 MHz	3 MHz	2
	2~5	1 MHz	3 MHz	3
	5~9	1 MHz	3 MHz	3
LTE FDD Band 7	0.00009~0.15	1KHz	3KHz	30
	0.00015~0.03	10KHz	30KHz	10
	0.03~1	100KHz	300KHz	10
	1~2	1 MHz	3 MHz	2
	2~5	1 MHz	3 MHz	3
	5~8	1 MHz	3 MHz	3
	8~11	1 MHz	3 MHz	3
	11~14	1 MHz	3 MHz	3
	14~18	1 MHz	3 MHz	3
	18~20	1 MHz	3 MHz	2
	20~23	1 MHz	3 MHz	2
	23~26	1 MHz	3 MHz	2
LTE FDD Band 12	0.00009~0.15	1KHz	3KHz	30
	0.00015~0.03	10KHz	30KHz	10
	0.03~1	100KHz	300KHz	10
	1~2	1 MHz	3 MHz	2
	2~5	1 MHz	3 MHz	3
	5~8	1 MHz	3 MHz	3

This report shall not be reproduced except in full, without the written approval of Shenzhen LCS Compliance Testing Laboratory Ltd.

TEST LIMITS

According to §24.238, §22.917, §27.53(h), § 27.53(m) (4), §27.53(g) specify that the power of any emission outside of the authorized operating frequency ranges must be attenuated below the transmitting power (P) by a factor of at least 43 + 10 log(P) dB.
The specification that emissions shall be attenuated below the transmitter power (P) by at least 43 + 10 log (P) dB, translates in the relevant power range (1 to 0.001 W) to -13 dBm. At 1 W the specified minimum attenuation becomes 43 dB and relative to a 30 dBm (1 W) carrier becomes a limit of -13 dBm. At 0.001 W (0 dBm) the minimum attenuation is 13 dB, which again yields a limit of -13 dBm. In this way a translation of the specification from relative to absolute terms is carried out.

Frequency	Channel	Frequency Range	Verdict
LTE FDD Band 2	Low	9 KHz – 20 GHz	PASS
	Middle	9 KHz – 20 GHz	PASS
	High	9 KHz – 20 GHz	PASS
LTE FDD Band 5	Low	9 KHz – 9 GHz	PASS
	Middle	9 KHz – 9 GHz	PASS
	High	9 KHz – 9 GHz	PASS
LTE FDD Band 7	Low	9 KHz – 26 GHz	PASS
	Middle	9 KHz – 26 GHz	PASS
	High	9 KHz – 26 GHz	PASS
LTE FDD Band 12	Low	9 KHz – 8 GHz	PASS
	Middle	9 KHz – 8 GHz	PASS
	High	9 KHz – 8 GHz	PASS

TEST RESULTS

Remark:
1. We tested all RB Configuration refer 3GPP TS136 521 for each Channel Bandwidth of LTE FDD Band 2, LTE FDD Band 5, LTE FDD Band 7, LTE FDD Band 12;
2. EIRP=P_{Mea}(dBm)-P_{cl}(dB) +G_a(dBi)
3. We were not recorded other points as values lower than limits.
4. Margin = EIRP - Limit

LTE FDD Band 2_Channel Bandwidth 1.4MHz_QPSK_ Low Channel

Frequency (MHz)	P_{Mea} (dBm)	P_{cl} (dB)	Diatance	G_a Antenna Gain(dB)	Peak EIRP (dBm)	Limit (dBm)	Margin (dB)	Polarization
3701.40	-39.35	5.26	3.00	9.88	-34.73	-13.00	-21.73	H
5552.10	-45.45	6.11	3.00	11.36	-40.20	-13.00	-27.20	H
3701.40	-29.47	5.26	3.00	9.88	-24.85	-13.00	-11.85	V
5552.10	-36.64	6.11	3.00	11.36	-31.39	-13.00	-18.39	V

LTE FDD Band 2_Channel Bandwidth 1.4MHz_QPSK_ Middle Channel

Frequency (MHz)	P_{Mea} (dBm)	P_{cl} (dB)	Diatance	G_a Antenna Gain(dB)	Peak EIRP (dBm)	Limit (dBm)	Margin (dB)	Polarization
3760.00	-51.78	5.32	3.00	10.03	-47.07	-33.68	-13.39	H
5640.00	-54.56	6.19	3.00	11.41	-49.34	-39.25	-10.09	H
3760.00	-55.85	5.32	3.00	10.03	-51.14	-26.98	-24.16	V
5640.00	-60.68	6.19	3.00	11.41	-55.46	-29.48	-25.98	V

LTE FDD Band 2_Channel Bandwidth 1.4MHz_QPSK_ High Channel

Frequency (MHz)	P_{Mea} (dBm)	P_{cl} (dB)	Diatance	G_a Antenna Gain(dB)	Peak EIRP (dBm)	Limit (dBm)	Margin (dB)	Polarization
3806.60	-40.04	5.36	3.00	9.62	-35.78	-13.00	-22.78	H
5709.90	-43.98	6.24	3.00	11.46	-38.76	-13.00	-25.76	H
3806.60	-29.16	5.36	3.00	9.62	-24.9	-13.00	-11.90	V
5709.90	-33.63	6.24	3.00	11.46	-28.41	-13.00	-15.41	V

This report shall not be reproduced except in full, without the written approval of Shenzhen LCS Compliance Testing Laboratory Ltd.

LTE FDD Band 2_Channel Bandwidth 3MHz_QPSK_ Low Channel

Frequency (MHz)	P_{Mea} (dBm)	P_{cl} (dB)	Diatance	G_a Antenna Gain(dB)	Peak EIRP (dBm)	Limit (dBm)	Margin (dB)	Polarization
3703.00	-40.25	5.26	3.00	9.88	-35.63	-13.00	-22.63	H
5554.50	-44.84	6.11	3.00	11.36	-39.59	-13.00	-26.59	H
3703.00	-31.74	5.26	3.00	9.88	-27.12	-13.00	-14.12	V
5554.50	-33.97	6.11	3.00	11.36	-28.72	-13.00	-15.72	V

LTE FDD Band 2_Channel Bandwidth 3MHz_QPSK_ Middle Channel

Frequency (MHz)	P_{Mea} (dBm)	P_{cl} (dB)	Diatance	G_a Antenna Gain(dB)	Peak EIRP (dBm)	Limit (dBm)	Margin (dB)	Polarization
3760.00	-39.27	5.32	3.00	10.03	-34.56	-13.00	-21.56	H
5640.00	-44.30	6.19	3.00	11.41	-39.08	-13.00	-26.08	H
3760.00	-31.86	5.32	3.00	10.03	-27.15	-13.00	-14.15	V
5640.00	-36.90	6.19	3.00	11.41	-31.68	-13.00	-18.68	V

LTE FDD Band 2_Channel Bandwidth 3MHz_QPSK_ High Channel

Frequency (MHz)	P_{Mea} (dBm)	P_{cl} (dB)	Diatance	G_a Antenna Gain(dB)	Peak EIRP (dBm)	Limit (dBm)	Margin (dB)	Polarization
3817.00	-39.76	5.36	3.00	9.62	-35.50	-13.00	-22.50	H
5725.50	-46.07	6.24	3.00	11.46	-40.85	-13.00	-27.85	H
3817.00	-29.80	5.36	3.00	9.62	-25.54	-13.00	-12.54	V
5725.50	-35.63	6.24	3.00	11.46	-30.41	-13.00	-17.41	V

LTE FDD Band 2_Channel Bandwidth 5MHz_QPSK_ Low Channel

Frequency (MHz)	P_{Mea} (dBm)	P_{cl} (dB)	Diatance	G_a Antenna Gain(dB)	Peak EIRP (dBm)	Limit (dBm)	Margin (dB)	Polarization
3705.00	-38.77	5.26	3.00	9.88	-34.15	-13.00	-21.15	H
5557.50	-43.74	6.11	3.00	11.36	-38.49	-13.00	-25.49	H
3705.00	-30.81	5.26	3.00	9.88	-26.19	-13.00	-13.19	V
5557.50	-35.95	6.11	3.00	11.36	-30.7	-13.00	-17.70	V

LTE FDD Band 2_Channel Bandwidth 5MHz_QPSK_ Middle Channel

Frequency (MHz)	P_{Mea} (dBm)	P_{cl} (dB)	Diatance	G_a Antenna Gain(dB)	Peak EIRP (dBm)	Limit (dBm)	Margin (dB)	Polarization
3760.00	-37.90	5.32	3.00	10.03	-33.19	-13.00	-20.19	H
5640.00	-44.04	6.19	3.00	11.41	-38.82	-13.00	-25.82	H
3760.00	-30.23	5.32	3.00	10.03	-25.52	-13.00	-12.52	V
5640.00	-36.36	6.19	3.00	11.41	-31.14	-13.00	-18.14	V

LTE FDD Band 2_Channel Bandwidth 5MHz_QPSK_ High Channel

Frequency (MHz)	P_{Mea} (dBm)	P_{cl} (dB)	Diatance	G_a Antenna Gain(dB)	Peak EIRP (dBm)	Limit (dBm)	Margin (dB)	Polarization
3815.00	-37.52	5.36	3.00	9.62	-33.26	-13.00	-20.26	H
5722.50	-45.67	6.24	3.00	11.46	-40.45	-13.00	-27.45	H
3815.00	-29.85	5.36	3.00	9.62	-25.59	-13.00	-12.59	V
5722.50	-36.70	6.24	3.00	11.46	-31.48	-13.00	-18.48	V

LTE FDD Band 2_Channel Bandwidth 10MHz_QPSK_ Low Channel

Frequency (MHz)	P_{Mea} (dBm)	P_{cl} (dB)	Diatance	G_a Antenna Gain(dB)	Peak EIRP (dBm)	Limit (dBm)	Margin (dB)	Polarization
3710.00	-37.22	5.26	3.00	9.88	-32.60	-13.00	-19.60	H
5565.00	-45.94	6.11	3.00	11.36	-40.69	-13.00	-27.69	H
3710.00	-30.76	5.26	3.00	9.88	-26.14	-13.00	-13.14	V
5565.00	-33.36	6.11	3.00	11.36	-28.11	-13.00	-15.11	V

This report shall not be reproduced except in full, without the written approval of Shenzhen LCS Compliance Testing Laboratory Ltd.

LTE FDD Band 2_Channel Bandwidth 10MHz_QPSK_ Middle Channel

Frequency (MHz)	P_{Mea} (dBm)	P_{cl} (dB)	Diatance	G_a Antenna Gain(dB)	Peak EIRP (dBm)	Limit (dBm)	Margin (dB)	Polarization
3760.00	-37.93	5.32	3.00	10.03	-33.22	-13.00	-20.22	H
5640.00	-44.02	6.19	3.00	11.41	-38.8	-13.00	-25.80	H
3760.00	-31.30	5.32	3.00	10.03	-26.59	-13.00	-13.59	V
5640.00	-35.71	6.19	3.00	11.41	-30.49	-13.00	-17.49	V

LTE FDD Band 2_Channel Bandwidth 10MHz_QPSK_ High Channel

Frequency (MHz)	P_{Mea} (dBm)	P_{cl} (dB)	Diatance	G_a Antenna Gain(dB)	Peak EIRP (dBm)	Limit (dBm)	Margin (dB)	Polarization
3810.00	-37.75	5.36	3.00	9.62	-33.49	-13.00	-20.49	H
5715.00	-43.48	6.24	3.00	11.46	-38.26	-13.00	-25.26	H
3810.00	-29.40	5.36	3.00	9.62	-25.14	-13.00	-12.14	V
5715.00	-33.98	6.24	3.00	11.46	-28.76	-13.00	-15.76	V

LTE FDD Band 2_Channel Bandwidth 15MHz_QPSK_ Low Channel

Frequency (MHz)	P_{Mea} (dBm)	P_{cl} (dB)	Diatance	G_a Antenna Gain(dB)	Peak EIRP (dBm)	Limit (dBm)	Margin (dB)	Polarization
3715.00	-38.81	5.26	3.00	9.88	-34.19	-13.00	-21.19	H
5572.50	-46.35	6.11	3.00	11.36	-41.10	-13.00	-28.10	H
3715.00	-28.06	5.26	3.00	9.88	-23.44	-13.00	-10.44	V
5572.50	-35.86	6.11	3.00	11.36	-30.61	-13.00	-17.61	V

LTE FDD Band 2_Channel Bandwidth 15MHz_QPSK_ Middle Channel

Frequency (MHz)	P_{Mea} (dBm)	P_{cl} (dB)	Diatance	G_a Antenna Gain(dB)	Peak EIRP (dBm)	Limit (dBm)	Margin (dB)	Polarization
3760.00	-39.54	5.32	3.00	10.03	-34.83	-13.00	-21.83	H
5640.00	-44.19	6.19	3.00	11.41	-38.97	-13.00	-25.97	H
3760.00	-30.10	5.32	3.00	10.03	-25.39	-13.00	-12.39	V
5640.00	-35.14	6.19	3.00	11.41	-29.92	-13.00	-16.92	V

LTE FDD Band 2_Channel Bandwidth 15MHz_QPSK_ High Channel

Frequency (MHz)	P_{Mea} (dBm)	P_{cl} (dB)	Diatance	G_a Antenna Gain(dB)	Peak EIRP (dBm)	Limit (dBm)	Margin (dB)	Polarization
3805.00	-39.86	5.36	3.00	9.62	-35.60	-13.00	-22.60	H
5707.50	-45.65	6.24	3.00	11.46	-40.43	-13.00	-27.43	H
3805.00	-30.47	5.36	3.00	9.62	-26.21	-13.00	-13.21	V
5707.50	-33.61	6.24	3.00	11.46	-28.39	-13.00	-15.39	V

LTE FDD Band 2_Channel Bandwidth 20MHz_QPSK_ Low Channel

Frequency (MHz)	P_{Mea} (dBm)	P_{cl} (dB)	Diatance	G_a Antenna Gain(dB)	Peak EIRP (dBm)	Limit (dBm)	Margin (dB)	Polarization
3715.00	-38.75	5.26	3.00	9.88	-34.13	-13.00	-21.13	H
5572.50	-43.24	6.11	3.00	11.36	-37.99	-13.00	-24.99	H
3715.00	-29.89	5.26	3.00	9.88	-25.27	-13.00	-12.27	V
5572.50	-33.62	6.11	3.00	11.36	-28.37	-13.00	-15.37	V

LTE FDD Band 2_Channel Bandwidth 20MHz_QPSK_ Middle Channel

Frequency (MHz)	P_{Mea} (dBm)	P_{cl} (dB)	Diatance	G_a Antenna Gain(dB)	Peak EIRP (dBm)	Limit (dBm)	Margin (dB)	Polarization
3760.00	-40.42	5.32	3.00	10.03	-35.71	-13.00	-22.71	H
5640.00	-46.68	6.19	3.00	11.41	-41.46	-13.00	-28.46	H
3760.00	-28.87	5.32	3.00	10.03	-24.16	-13.00	-11.16	V
5640.00	-33.71	6.19	3.00	11.41	-28.49	-13.00	-15.49	V

This report shall not be reproduced except in full, without the written approval of Shenzhen LCS Compliance Testing Laboratory Ltd.

LTE FDD Band 2_Channel Bandwidth 20MHz_QPSK_ High Channel

Frequency (MHz)	P_{Mea} (dBm)	P_{cl} (dB)	Diatance	G_a Antenna Gain(dB)	Peak EIRP (dBm)	Limit (dBm)	Margin (dB)	Polarization
3800.00	-39.94	5.36	3.00	9.62	-35.68	-13.00	-22.68	H
5700.00	-44.21	6.24	3.00	11.46	-38.99	-13.00	-25.99	H
3800.00	-31.46	5.36	3.00	9.62	-27.2	-13.00	-14.20	V
5700.00	-36.80	6.24	3.00	11.46	-31.58	-13.00	-18.58	V

LTE FDD Band 2_Channel Bandwidth 1.4MHz_16QAM _ Low Channel

Frequency (MHz)	P_{Mea} (dBm)	P_{cl} (dB)	Diatance	G_a Antenna Gain(dB)	Peak EIRP (dBm)	Limit (dBm)	Margin (dB)	Polarization
3701.40	-42.05	5.26	3.00	9.88	-37.43	-13.00	-24.43	H
5552.10	-49.85	6.11	3.00	11.36	-44.6	-13.00	-31.60	H
3701.40	-33.15	5.26	3.00	9.88	-28.53	-13.00	-15.53	V
5552.10	-41.41	6.11	3.00	11.36	-36.16	-13.00	-23.16	V

LTE FDD Band 2_Channel Bandwidth 1.4MHz_16QAM _ Middle Channel

Frequency (MHz)	P_{Mea} (dBm)	P_{cl} (dB)	Diatance	G_a Antenna Gain(dB)	Peak EIRP (dBm)	Limit (dBm)	Margin (dB)	Polarization
3760.00	-41.42	5.32	3.00	10.03	-36.71	-33.68	-3.03	H
5640.00	-47.45	6.19	3.00	11.41	-42.23	-39.25	-2.98	H
3760.00	-33.39	5.32	3.00	10.03	-28.68	-26.98	-1.70	V
5640.00	-38.11	6.19	3.00	11.41	-32.89	-29.48	-3.41	V

LTE FDD Band 2_Channel Bandwidth 1.4MHz_16QAM _ High Channel

Frequency (MHz)	P_{Mea} (dBm)	P_{cl} (dB)	Diatance	G_a Antenna Gain(dB)	Peak EIRP (dBm)	Limit (dBm)	Margin (dB)	Polarization
3806.60	-43.06	5.36	3.00	9.62	-38.80	-13.00	-25.80	H
5709.90	-47.87	6.24	3.00	11.46	-42.65	-13.00	-29.65	H
3806.60	-32.19	5.36	3.00	9.62	-27.93	-13.00	-14.93	V
5709.90	-39.34	6.24	3.00	11.46	-34.12	-13.00	-21.12	V

LTE FDD Band 2_Channel Bandwidth 3MHz_16QAM _ Low Channel

Frequency (MHz)	P_{Mea} (dBm)	P_{cl} (dB)	Diatance	G_a Antenna Gain(dB)	Peak EIRP (dBm)	Limit (dBm)	Margin (dB)	Polarization
3703.00	-43.67	5.26	3.00	9.88	-39.05	-13.00	-26.05	H
5554.50	-49.34	6.11	3.00	11.36	-44.09	-13.00	-31.09	H
3703.00	-32.61	5.26	3.00	9.88	-27.99	-13.00	-14.99	V
5554.50	-38.38	6.11	3.00	11.36	-33.13	-13.00	-20.13	V

LTE FDD Band 2_Channel Bandwidth 3MHz_16QAM _ Middle Channel

Frequency (MHz)	P_{Mea} (dBm)	P_{cl} (dB)	Diatance	G_a Antenna Gain(dB)	Peak EIRP (dBm)	Limit (dBm)	Margin (dB)	Polarization
3760.00	-43.06	5.32	3.00	10.03	-38.35	-13.00	-25.35	H
5640.00	-49.21	6.19	3.00	11.41	-43.99	-13.00	-30.99	H
3760.00	-31.68	5.32	3.00	10.03	-26.97	-13.00	-13.97	V
5640.00	-38.27	6.19	3.00	11.41	-33.05	-13.00	-20.05	V

LTE FDD Band 2_Channel Bandwidth 3MHz_16QAM _ High Channel

Frequency (MHz)	P_{Mea} (dBm)	P_{cl} (dB)	Diatance	G_a Antenna Gain(dB)	Peak EIRP (dBm)	Limit (dBm)	Margin (dB)	Polarization
3817.00	-43.33	5.36	3.00	9.62	-39.07	-13.00	-26.07	H
5725.50	-49.04	6.24	3.00	11.46	-43.82	-13.00	-30.82	H
3817.00	-31.95	5.36	3.00	9.62	-27.69	-13.00	-14.69	V
5725.50	-40.38	6.24	3.00	11.46	-35.16	-13.00	-22.16	V

This report shall not be reproduced except in full, without the written approval of Shenzhen LCS Compliance Testing Laboratory Ltd.

LTE FDD Band 2_Channel Bandwidth 5MHz_16QAM _ Low Channel

Frequency (MHz)	P_{Mea} (dBm)	P_{cl} (dB)	Diatance	G_a Antenna Gain(dB)	Peak EIRP (dBm)	Limit (dBm)	Margin (dB)	Polarization
3705.00	-43.31	5.26	3.00	9.88	-38.69	-13.00	-25.69	H
5557.50	-46.24	6.11	3.00	11.36	-40.99	-13.00	-27.99	H
3705.00	-34.94	5.26	3.00	9.88	-30.32	-13.00	-17.32	V
5557.50	-41.25	6.11	3.00	11.36	-36.00	-13.00	-23.00	V

LTE FDD Band 2_Channel Bandwidth 5MHz_16QAM _ Middle Channel

Frequency (MHz)	P_{Mea} (dBm)	P_{cl} (dB)	Diatance	G_a Antenna Gain(dB)	Peak EIRP (dBm)	Limit (dBm)	Margin (dB)	Polarization
3760.00	-42.88	5.32	3.00	10.03	-38.17	-13.00	-25.17	H
5640.00	-46.96	6.19	3.00	11.41	-41.74	-13.00	-28.74	H
3760.00	-33.85	5.32	3.00	10.03	-29.14	-13.00	-16.14	V
5640.00	-41.76	6.19	3.00	11.41	-36.54	-13.00	-23.54	V

LTE FDD Band 2_Channel Bandwidth 5MHz_16QAM _ High Channel

Frequency (MHz)	P_{Mea} (dBm)	P_{cl} (dB)	Diatance	G_a Antenna Gain(dB)	Peak EIRP (dBm)	Limit (dBm)	Margin (dB)	Polarization
3815.00	-41.58	5.36	3.00	9.62	-37.32	-13.00	-24.32	H
5722.50	-48.51	6.24	3.00	11.46	-43.29	-13.00	-30.29	H
3815.00	-34.72	5.36	3.00	9.62	-30.46	-13.00	-17.46	V
5722.50	-41.89	6.24	3.00	11.46	-36.67	-13.00	-23.67	V

LTE FDD Band 2_Channel Bandwidth 10MHz_16QAM _ Low Channel

Frequency (MHz)	P_{Mea} (dBm)	P_{cl} (dB)	Diatance	G_a Antenna Gain(dB)	Peak EIRP (dBm)	Limit (dBm)	Margin (dB)	Polarization
3710.00	-40.05	5.26	3.00	9.88	-35.43	-13.00	-22.43	H
5565.00	-48.34	6.11	3.00	11.36	-43.09	-13.00	-30.09	H
3710.00	-31.50	5.26	3.00	9.88	-26.88	-13.00	-13.88	V
5565.00	-41.64	6.11	3.00	11.36	-36.39	-13.00	-23.39	V

LTE FDD Band 2_Channel Bandwidth 10MHz_16QAM _ Middle Channel

Frequency (MHz)	P_{Mea} (dBm)	P_{cl} (dB)	Diatance	G_a Antenna Gain(dB)	Peak EIRP (dBm)	Limit (dBm)	Margin (dB)	Polarization
3760.00	-40.90	5.32	3.00	10.03	-36.19	-13.00	-23.19	H
5640.00	-49.15	6.19	3.00	11.41	-43.93	-13.00	-30.93	H
3760.00	-33.57	5.32	3.00	10.03	-28.86	-13.00	-15.86	V
5640.00	-41.08	6.19	3.00	11.41	-35.86	-13.00	-22.86	V

LTE FDD Band 2_Channel Bandwidth 10MHz_16QAM _ High Channel

Frequency (MHz)	P_{Mea} (dBm)	P_{cl} (dB)	Diatance	G_a Antenna Gain(dB)	Peak EIRP (dBm)	Limit (dBm)	Margin (dB)	Polarization
3810.00	-42.16	5.36	3.00	9.62	-37.90	-13.00	-24.90	H
5715.00	-46.97	6.24	3.00	11.46	-41.75	-13.00	-28.75	H
3810.00	-33.13	5.36	3.00	9.62	-28.87	-13.00	-15.87	V
5715.00	-40.39	6.24	3.00	11.46	-35.17	-13.00	-22.17	V

LTE FDD Band 2_Channel Bandwidth 15MHz_16QAM _ Low Channel

Frequency (MHz)	P_{Mea} (dBm)	P_{cl} (dB)	Diatance	G_a Antenna Gain(dB)	Peak EIRP (dBm)	Limit (dBm)	Margin (dB)	Polarization
3715.00	-41.74	5.26	3.00	9.88	-37.12	-13.00	-24.12	H
5572.50	-46.97	6.11	3.00	11.36	-41.72	-13.00	-28.72	H
3715.00	-33.79	5.26	3.00	9.88	-29.17	-13.00	-16.17	V
5572.50	-39.45	6.11	3.00	11.36	-34.2	-13.00	-21.20	V

This report shall not be reproduced except in full, without the written approval of Shenzhen LCS Compliance Testing Laboratory Ltd.

LTE FDD Band 2_Channel Bandwidth 15MHz_16QAM _ Middle Channel

Frequency (MHz)	P_{Mea} (dBm)	P_{cl} (dB)	Diatance	G_a Antenna Gain(dB)	Peak EIRP (dBm)	Limit (dBm)	Margin (dB)	Polarization
3760.00	-43.66	5.32	3.00	10.03	-38.95	-13.00	-25.95	H
5640.00	-49.84	6.19	3.00	11.41	-44.62	-13.00	-31.62	H
3760.00	-32.45	5.32	3.00	10.03	-27.74	-13.00	-14.74	V
5640.00	-41.79	6.19	3.00	11.41	-36.57	-13.00	-23.57	V

LTE FDD Band 2_Channel Bandwidth 15MHz_16QAM _ High Channel

Frequency (MHz)	P_{Mea} (dBm)	P_{cl} (dB)	Diatance	G_a Antenna Gain(dB)	Peak EIRP (dBm)	Limit (dBm)	Margin (dB)	Polarization
3805.00	-42.43	5.36	3.00	9.62	-38.17	-13.00	-25.17	H
5707.50	-48.93	6.24	3.00	11.46	-43.71	-13.00	-30.71	H
3805.00	-34.38	5.36	3.00	9.62	-30.12	-13.00	-17.12	V
5707.50	-41.90	6.24	3.00	11.46	-36.68	-13.00	-23.68	V

LTE FDD Band 2_Channel Bandwidth 20MHz_16QAM _ Low Channel

Frequency (MHz)	P_{Mea} (dBm)	P_{cl} (dB)	Diatance	G_a Antenna Gain(dB)	Peak EIRP (dBm)	Limit (dBm)	Margin (dB)	Polarization
3715.00	-40.15	5.26	3.00	9.88	-35.53	-13.00	-22.53	H
5572.50	-49.98	6.11	3.00	11.36	-44.73	-13.00	-31.73	H
3715.00	-32.02	5.26	3.00	9.88	-27.4	-13.00	-14.40	V
5572.50	-38.90	6.11	3.00	11.36	-33.65	-13.00	-20.65	V

LTE FDD Band 2_Channel Bandwidth 20MHz_16QAM _ Middle Channel

Frequency (MHz)	P_{Mea} (dBm)	P_{cl} (dB)	Diatance	G_a Antenna Gain(dB)	Peak EIRP (dBm)	Limit (dBm)	Margin (dB)	Polarization
3760.00	-40.18	5.32	3.00	10.03	-35.47	-13.00	-22.47	H
5640.00	-49.14	6.19	3.00	11.41	-43.92	-13.00	-30.92	H
3760.00	-34.25	5.32	3.00	10.03	-29.54	-13.00	-16.54	V
5640.00	-40.88	6.19	3.00	11.41	-35.66	-13.00	-22.66	V

LTE FDD Band 2_Channel Bandwidth 20MHz_16QAM _ High Channel

Frequency (MHz)	P_{Mea} (dBm)	P_{cl} (dB)	Diatance	G_a Antenna Gain(dB)	Peak EIRP (dBm)	Limit (dBm)	Margin (dB)	Polarization
3800.00	-37.66	5.36	3.00	9.62	-33.40	-13.00	-20.40	H
5700.00	-49.06	6.24	3.00	11.46	-43.84	-13.00	-30.84	H
3800.00	-35.21	5.36	3.00	9.62	-30.95	-13.00	-17.95	V
5700.00	-39.87	6.24	3.00	11.46	-34.65	-13.00	-21.65	V

LTE FDD Band 5_Channel Bandwidth 1.4MHz_QPSK_ Low Channel

Frequency (MHz)	P_{Mea} (dBm)	P_{cl} (dB)	Diatance	G_a Antenna Gain(dB)	Peak EIRP (dBm)	Limit (dBm)	Margin (dB)	Polarization
1649.40	-40.17	3.86	3.00	8.56	-35.47	-13.00	-22.47	H
2474.10	-46.61	4.29	3.00	6.98	-43.92	-13.00	-30.92	H
1649.40	-34.24	3.86	3.00	8.56	-29.54	-13.00	-16.54	V
2474.10	-38.35	4.29	3.00	6.98	-35.66	-13.00	-22.66	V

LTE FDD Band 5_Channel Bandwidth 1.4MHz_QPSK_ Middle Channel

Frequency (MHz)	P_{Mea} (dBm)	P_{cl} (dB)	Diatance	G_a Antenna Gain(dB)	Peak EIRP (dBm)	Limit (dBm)	Margin (dB)	Polarization
1673.00	-38.08	3.90	3.00	8.58	-33.40	-13.00	-20.40	H
2509.50	-46.32	4.32	3.00	6.80	-43.84	-13.00	-30.84	H
1673.00	-35.63	3.90	3.00	8.58	-30.95	-13.00	-17.95	V
2509.50	-37.13	4.32	3.00	6.80	-34.65	-13.00	-21.65	V

This report shall not be reproduced except in full, without the written approval of Shenzhen LCS Compliance Testing Laboratory Ltd.

LTE FDD Band 5_Channel Bandwidth 1.4MHz_QPSK_ High Channel

Frequency (MHz)	P_{Mea} (dBm)	P_{cl} (dB)	Diatance	G_a Antenna Gain(dB)	Peak EIRP (dBm)	Limit (dBm)	Margin (dB)	Polarization
1696.60	-41.61	3.91	3.00	9.06	-36.46	-13.00	-23.46	H
2544.90	-46.71	4.32	3.00	6.65	-44.38	-13.00	-31.38	H
1696.60	-34.45	3.91	3.00	9.06	-29.30	-13.00	-16.30	V
2544.90	-39.22	4.32	3.00	6.65	-36.89	-13.00	-23.89	V

LTE FDD Band 5_Channel Bandwidth 3MHz_QPSK_ Low Channel

Frequency (MHz)	P_{Mea} (dBm)	P_{cl} (dB)	Diatance	G_a Antenna Gain(dB)	Peak EIRP (dBm)	Limit (dBm)	Margin (dB)	Polarization
1651.00	-41.13	3.86	3.00	8.56	-36.43	-13.00	-23.43	H
2476.50	-44.85	4.29	3.00	6.98	-42.16	-13.00	-29.16	H
1651.00	-33.01	3.86	3.00	8.56	-28.31	-13.00	-15.31	V
2476.50	-38.82	4.29	3.00	6.98	-36.13	-13.00	-23.13	V

LTE FDD Band 5_Channel Bandwidth 3MHz_QPSK_ Middle Channel

Frequency (MHz)	P_{Mea} (dBm)	P_{cl} (dB)	Diatance	G_a Antenna Gain(dB)	Peak EIRP (dBm)	Limit (dBm)	Margin (dB)	Polarization
1673.00	-41.61	3.90	3.00	8.58	-36.93	-13.00	-23.93	H
2509.50	-47.12	4.32	3.00	6.80	-44.64	-13.00	-31.64	H
1673.00	-33.14	3.90	3.00	8.58	-28.46	-13.00	-15.46	V
2509.50	-36.13	4.32	3.00	6.80	-33.65	-13.00	-20.65	V

LTE FDD Band 5_Channel Bandwidth 3MHz_QPSK_ High Channel

Frequency (MHz)	P_{Mea} (dBm)	P_{cl} (dB)	Diatance	G_a Antenna Gain(dB)	Peak EIRP (dBm)	Limit (dBm)	Margin (dB)	Polarization
1695.00	-38.65	3.91	3.00	9.06	-33.50	-13.00	-20.50	H
2542.50	-44.41	4.32	3.00	6.65	-42.08	-13.00	-29.08	H
1695.00	-34.54	3.91	3.00	9.06	-29.39	-13.00	-16.39	V
2542.50	-39.51	4.32	3.00	6.65	-37.18	-13.00	-24.18	V

LTE FDD Band 5_Channel Bandwidth 5MHz_QPSK_ Low Channel

Frequency (MHz)	P_{Mea} (dBm)	P_{cl} (dB)	Diatance	G_a Antenna Gain(dB)	Peak EIRP (dBm)	Limit (dBm)	Margin (dB)	Polarization
1653.00	-39.79	3.86	3.00	8.56	-35.09	-13.00	-22.09	H
2479.50	-45.86	4.29	3.00	6.98	-43.17	-13.00	-30.17	H
1653.00	-34.78	3.86	3.00	8.56	-30.08	-13.00	-17.08	V
2479.50	-37.14	4.29	3.00	6.98	-34.45	-13.00	-21.45	V

LTE FDD Band 5_Channel Bandwidth 5MHz_QPSK_ Middle Channel

Frequency (MHz)	P_{Mea} (dBm)	P_{cl} (dB)	Diatance	G_a Antenna Gain(dB)	Peak EIRP (dBm)	Limit (dBm)	Margin (dB)	Polarization
1673.00	-38.12	3.90	3.00	8.58	-33.44	-13.00	-20.44	H
2509.50	-46.03	4.32	3.00	6.80	-43.55	-13.00	-30.55	H
1673.00	-35.52	3.90	3.00	8.58	-30.84	-13.00	-17.84	V
2509.50	-37.71	4.32	3.00	6.80	-35.23	-13.00	-22.23	V

LTE FDD Band 5_Channel Bandwidth 5MHz_QPSK_ High Channel

Frequency (MHz)	P_{Mea} (dBm)	P_{cl} (dB)	Diatance	G_a Antenna Gain(dB)	Peak EIRP (dBm)	Limit (dBm)	Margin (dB)	Polarization
1693.00	-40.38	3.91	3.00	9.06	-35.23	-13.00	-22.23	H
2539.50	-46.86	4.32	3.00	6.65	-44.53	-13.00	-31.53	H
1693.00	-34.85	3.91	3.00	9.06	-29.70	-13.00	-16.70	V
2539.50	-39.67	4.32	3.00	6.65	-37.34	-13.00	-24.34	V

This report shall not be reproduced except in full, without the written approval of Shenzhen LCS Compliance Testing Laboratory Ltd.

LTE FDD Band 5_Channel Bandwidth 10MHz_QPSK_ Low Channel

Frequency (MHz)	P_{Mea} (dBm)	P_{cl} (dB)	Diatance	G_a Antenna Gain(dB)	Peak EIRP (dBm)	Limit (dBm)	Margin (dB)	Polarization
1658.00	-40.64	3.86	3.00	8.56	-35.94	-13.00	-22.94	H
2487.00	-45.64	4.29	3.00	6.98	-42.95	-13.00	-29.95	H
1658.00	-36.79	3.86	3.00	8.56	-32.09	-13.00	-19.09	V
2487.00	-37.36	4.29	3.00	6.98	-34.67	-13.00	-21.67	V

LTE FDD Band 5_Channel Bandwidth 10MHz_QPSK_ Middle Channel

Frequency (MHz)	P_{Mea} (dBm)	P_{cl} (dB)	Diatance	G_a Antenna Gain(dB)	Peak EIRP (dBm)	Limit (dBm)	Margin (dB)	Polarization
1673.00	-41.33	3.90	3.00	8.58	-36.65	-13.00	-23.65	H
2509.50	-46.09	4.32	3.00	6.80	-43.61	-13.00	-30.61	H
1673.00	-36.85	3.90	3.00	8.58	-32.17	-13.00	-19.17	V
2509.50	-37.11	4.32	3.00	6.80	-34.63	-13.00	-21.63	V

LTE FDD Band 5_Channel Bandwidth 10MHz_QPSK_ High Channel

Frequency (MHz)	P_{Mea} (dBm)	P_{cl} (dB)	Diatance	G_a Antenna Gain(dB)	Peak EIRP (dBm)	Limit (dBm)	Margin (dB)	Polarization
1688.00	-39.53	3.91	3.00	9.06	-34.38	-13.00	-21.38	H
2532.00	-45.69	4.32	3.00	6.65	-43.36	-13.00	-30.36	H
1688.00	-33.61	3.91	3.00	9.06	-28.46	-13.00	-15.46	V
2532.00	-39.48	4.32	3.00	6.65	-37.15	-13.00	-24.15	V

LTE FDD Band 5_Channel Bandwidth 1.4MHz_16QAM_ Low Channel

Frequency (MHz)	P_{Mea} (dBm)	P_{cl} (dB)	Diatance	G_a Antenna Gain(dB)	Peak EIRP (dBm)	Limit (dBm)	Margin (dB)	Polarization
1649.40	-44.11	3.86	3.00	8.56	-39.41	-13.00	-26.41	H
2474.10	-47.88	4.29	3.00	6.98	-45.19	-13.00	-32.19	H
1649.40	-39.26	3.86	3.00	8.56	-34.56	-13.00	-21.56	V
2474.10	-41.83	4.29	3.00	6.98	-39.14	-13.00	-26.14	V

LTE FDD Band 5_Channel Bandwidth 1.4MHz_16QAM _ Middle Channel

Frequency (MHz)	P_{Mea} (dBm)	P_{cl} (dB)	Diatance	G_a Antenna Gain(dB)	Peak EIRP (dBm)	Limit (dBm)	Margin (dB)	Polarization
1673.00	-42.90	3.90	3.00	8.58	-38.22	-13.00	-25.22	H
2509.50	-46.22	4.32	3.00	6.80	-43.74	-13.00	-30.74	H
1673.00	-36.22	3.90	3.00	8.58	-31.54	-13.00	-18.54	V
2509.50	-42.25	4.32	3.00	6.80	-39.77	-13.00	-26.77	V

LTE FDD Band 5_Channel Bandwidth 1.4MHz_16QAM _ High Channel

Frequency (MHz)	P_{Mea} (dBm)	P_{cl} (dB)	Diatance	G_a Antenna Gain(dB)	Peak EIRP (dBm)	Limit (dBm)	Margin (dB)	Polarization
1696.60	-43.80	3.91	3.00	9.06	-38.65	-13.00	-25.65	H
2544.90	-48.07	4.32	3.00	6.65	-45.74	-13.00	-32.74	H
1696.60	-38.94	3.91	3.00	9.06	-33.79	-13.00	-20.79	V
2544.90	-42.06	4.32	3.00	6.65	-39.73	-13.00	-26.73	V

LTE FDD Band 5_Channel Bandwidth 3MHz_16QAM _ Low Channel

Frequency (MHz)	P_{Mea} (dBm)	P_{cl} (dB)	Diatance	G_a Antenna Gain(dB)	Peak EIRP (dBm)	Limit (dBm)	Margin (dB)	Polarization
1651.00	-43.51	3.86	3.00	8.56	-38.81	-13.00	-25.81	H
2476.50	-47.64	4.29	3.00	6.98	-44.95	-13.00	-31.95	H
1651.00	-39.82	3.86	3.00	8.56	-35.12	-13.00	-22.12	V
2476.50	-40.27	4.29	3.00	6.98	-37.58	-13.00	-24.58	V

This report shall not be reproduced except in full, without the written approval of Shenzhen LCS Compliance Testing Laboratory Ltd.

LTE FDD Band 5_Channel Bandwidth 3MHz_16QAM _ MIddle Channel

Frequency (MHz)	P_{Mea} (dBm)	P_{cl} (dB)	Diatance	G_a Antenna Gain(dB)	Peak EIRP (dBm)	Limit (dBm)	Margin (dB)	Polarization
1673.00	-42.29	3.90	3.00	8.58	-37.61	-13.00	-24.61	H
2509.50	-46.15	4.32	3.00	6.80	-43.67	-13.00	-30.67	H
1673.00	-39.09	3.90	3.00	8.58	-34.41	-13.00	-21.41	V
2509.50	-39.62	4.32	3.00	6.80	-37.14	-13.00	-24.14	V

LTE FDD Band 5_Channel Bandwidth 3MHz_16QAM _ High Channel

Frequency (MHz)	P_{Mea} (dBm)	P_{cl} (dB)	Diatance	G_a Antenna Gain(dB)	Peak EIRP (dBm)	Limit (dBm)	Margin (dB)	Polarization
1695.00	-44.66	3.91	3.00	9.06	-39.51	-13.00	-26.51	H
2542.50	-48.66	4.32	3.00	6.65	-46.33	-13.00	-33.33	H
1695.00	-39.35	3.91	3.00	9.06	-34.20	-13.00	-21.20	V
2542.50	-40.18	4.32	3.00	6.65	-37.85	-13.00	-24.85	V

LTE FDD Band 5_Channel Bandwidth 5MHz_16QAM _ Low Channel

Frequency (MHz)	P_{Mea} (dBm)	P_{cl} (dB)	Diatance	G_a Antenna Gain(dB)	Peak EIRP (dBm)	Limit (dBm)	Margin (dB)	Polarization
1653.00	-42.37	3.86	3.00	8.56	-37.67	-13.00	-24.67	H
2479.50	-48.76	4.29	3.00	6.98	-46.07	-13.00	-33.07	H
1653.00	-39.95	3.86	3.00	8.56	-35.25	-13.00	-22.25	V
2479.50	-41.21	4.29	3.00	6.98	-38.52	-13.00	-25.52	V

LTE FDD Band 5_Channel Bandwidth 3MHz_16QAM _ Middle Channel

Frequency (MHz)	P_{Mea} (dBm)	P_{cl} (dB)	Diatance	G_a Antenna Gain(dB)	Peak EIRP (dBm)	Limit (dBm)	Margin (dB)	Polarization
1673.00	-42.33	3.90	3.00	8.58	-37.65	-13.00	-24.65	H
2509.50	-47.01	4.32	3.00	6.80	-44.53	-13.00	-31.53	H
1673.00	-37.45	3.90	3.00	8.58	-32.77	-13.00	-19.77	V
2509.50	-42.61	4.32	3.00	6.80	-40.13	-13.00	-27.13	V

LTE FDD Band 5_Channel Bandwidth 5MHz_16QAM _ High Channel

Frequency (MHz)	P_{Mea} (dBm)	P_{cl} (dB)	Diatance	G_a Antenna Gain(dB)	Peak EIRP (dBm)	Limit (dBm)	Margin (dB)	Polarization
1693.00	-44.22	3.91	3.00	9.06	-39.07	-13.00	-26.07	H
2539.50	-46.60	4.32	3.00	6.65	-44.27	-13.00	-31.27	H
1693.00	-36.61	3.91	3.00	9.06	-31.46	-13.00	-18.46	V
2539.50	-39.13	4.32	3.00	6.65	-36.80	-13.00	-23.80	V

LTE FDD Band 5_Channel Bandwidth 10MHz_16QAM _ Low Channel

Frequency (MHz)	P_{Mea} (dBm)	P_{cl} (dB)	Diatance	G_a Antenna Gain(dB)	Peak EIRP (dBm)	Limit (dBm)	Margin (dB)	Polarization
1658	-43.43	3.86	3.00	8.56	-38.73	-13.00	-25.73	H
2487	-47.54	4.29	3.00	6.98	-44.85	-13.00	-31.85	H
1658	-38.00	3.86	3.00	8.56	-33.30	-13.00	-20.30	V
2487	-40.66	4.29	3.00	6.98	-37.97	-13.00	-24.97	V

This report shall not be reproduced except in full, without the written approval of Shenzhen LCS Compliance Testing Laboratory Ltd.

LTE FDD Band 5_Channel Bandwidth 10MHz_16QAM _ Middle Channel

Frequency (MHz)	P_{Mea} (dBm)	P_{cl} (dB)	Diatance	G_a Antenna Gain(dB)	Peak EIRP (dBm)	Limit (dBm)	Margin (dB)	Polarization
1673.00	-43.09	3.90	3.00	8.58	-38.41	-13.00	-25.41	H
2509.50	-46.33	4.32	3.00	6.80	-43.85	-13.00	-30.85	H
1673.00	-38.38	3.90	3.00	8.58	-33.70	-13.00	-20.70	V
2509.50	-40.08	4.32	3.00	6.80	-37.60	-13.00	-24.60	V

LTE FDD Band 5_Channel Bandwidth 10MHz_16QAM _ High Channel

Frequency (MHz)	P_{Mea} (dBm)	P_{cl} (dB)	Diatance	G_a Antenna Gain(dB)	Peak EIRP (dBm)	Limit (dBm)	Margin (dB)	Polarization
1688.00	-44.07	3.91	3.00	9.06	-38.92	-13.00	-25.92	H
2532.00	-46.93	4.32	3.00	6.65	-44.60	-13.00	-31.60	H
1688.00	-39.27	3.91	3.00	9.06	-34.12	-13.00	-21.12	V
2532.00	-41.25	4.32	3.00	6.65	-38.92	-13.00	-25.92	V

LTE FDD Band 7_Channel Bandwidth 5MHz_QPSK_ Low Channel

Frequency (MHz)	P_{Mea} (dBm)	P_{cl} (dB)	Diatance	G_a Antenna Gain (dB)	Peak EIRP (dBm)	Limit (dBm)	Margin (dB)	Polarization
5005.00	-40.03	5.88	3.00	10.77	-35.14	-13.00	-22.14	H
7507.50	-46.40	7.12	3.00	12.26	-41.26	-13.00	-28.26	H
5005.00	-34.96	5.88	3.00	10.77	-30.07	-13.00	-17.07	V
7507.50	-63.69	7.12	3.00	12.26	-58.55	-13.00	-45.55	V

LTE FDD Band 7_Channel Bandwidth 5MHz_QPSK_ Middle Channel

Frequency (MHz)	P_{Mea} (dBm)	P_{cl} (dB)	Diatance	G_a Antenna Gain (dB)	Peak EIRP (dBm)	Limit (dBm)	Margin (dB)	Polarization
5070.00	-41.54	5.90	3.00	10.81	-36.63	-13.00	-23.63	H
7605.00	-47.20	7.19	3.00	12.32	-42.07	-13.00	-29.07	H
5070.00	-33.61	5.90	3.00	10.81	-28.70	-13.00	-15.70	V
7605.00	-37.84	7.19	3.00	12.32	-32.71	-13.00	-19.71	V

LTE FDD Band 7_Channel Bandwidth 5MHz_QPSK_ High Channel

Frequency (MHz)	P_{Mea} (dBm)	P_{cl} (dB)	Diatance	G_a Antenna Gain (dB)	Peak EIRP (dBm)	Limit (dBm)	Margin (dB)	Polarization
5135.00	-38.81	5.94	3.00	10.86	-33.89	-13.00	-20.89	H
7702.50	-44.85	7.25	3.00	12.98	-39.12	-13.00	-26.12	H
5135.00	-36.31	5.94	3.00	10.86	-31.39	-13.00	-18.39	V
7702.50	-38.63	7.25	3.00	12.98	-32.90	-13.00	-19.90	V

LTE FDD Band 7_Channel Bandwidth 10MHz_QPSK_ Low Channel

Frequency (MHz)	P_{Mea} (dBm)	P_{cl} (dB)	Diatance	G_a Antenna Gain (dB)	Peak EIRP (dBm)	Limit (dBm)	Margin (dB)	Polarization
5010.00	-39.83	5.88	3.00	10.77	-34.94	-13.00	-21.94	H
7515.00	-44.99	7.12	3.00	12.26	-39.85	-13.00	-26.85	H
5010.00	-33.90	5.88	3.00	10.77	-29.01	-13.00	-16.01	V
7515.00	-38.23	7.12	3.00	12.26	-33.09	-13.00	-20.09	V

This report shall not be reproduced except in full, without the written approval of Shenzhen LCS Compliance Testing Laboratory Ltd.

LTE FDD Band 7_Channel Bandwidth 10MHz_QPSK_ Middle Channel

Frequency (MHz)	P_{Mea} (dBm)	P_{cl} (dB)	Diatance	G_a Antenna Gain (dB)	Peak EIRP (dBm)	Limit (dBm)	Margin (dB)	Polarization
5070.00	-41.05	5.90	3.00	10.81	-36.14	-13.00	-23.14	H
7605.00	-45.40	7.19	3.00	12.32	-40.27	-13.00	-27.27	H
5070.00	-34.52	5.90	3.00	10.81	-29.61	-13.00	-16.61	V
7605.00	-39.71	7.19	3.00	12.32	-34.58	-13.00	-21.58	V

LTE FDD Band 7_Channel Bandwidth 10MHz_QPSK_ High Channel

Frequency (MHz)	P_{Mea} (dBm)	P_{cl} (dB)	Diatance	G_a Antenna Gain (dB)	Peak EIRP (dBm)	Limit (dBm)	Margin (dB)	Polarization
5130.00	-41.70	5.94	3.00	10.86	-36.78	-13.00	-23.78	H
7695.00	-46.41	7.25	3.00	12.98	-40.68	-13.00	-27.68	H
5130.00	-33.35	5.94	3.00	10.86	-28.43	-13.00	-15.43	V
7695.00	-38.81	7.25	3.00	12.98	-33.08	-13.00	-20.08	V

LTE FDD Band 7_Channel Bandwidth 15MHz_QPSK_ Low Channel

Frequency (MHz)	P_{Mea} (dBm)	P_{cl} (dB)	Diatance	G_a Antenna Gain (dB)	Peak EIRP (dBm)	Limit (dBm)	Margin (dB)	Polarization
5015.00	-39.30	5.88	3.00	10.77	-34.41	-13.00	-21.41	H
7522.50	-44.44	7.12	3.00	12.26	-39.3	-13.00	-26.30	H
5015.00	-35.02	5.88	3.00	10.77	-30.13	-13.00	-17.13	V
7522.50	-37.10	7.12	3.00	12.26	-31.96	-13.00	-18.96	V

LTE FDD Band 7_Channel Bandwidth 15MHz_QPSK_ Middle Channel

Frequency (MHz)	P_{Mea} (dBm)	P_{cl} (dB)	Diatance	G_a Antenna Gain (dB)	Peak EIRP (dBm)	Limit (dBm)	Margin (dB)	Polarization
5070.00	-40.48	5.90	3.00	10.81	-35.57	-13.00	-22.57	H
7605.00	-45.51	7.19	3.00	12.32	-40.38	-13.00	-27.38	H
5070.00	-36.92	5.90	3.00	10.81	-32.01	-13.00	-19.01	V
7605.00	-37.10	7.19	3.00	12.32	-31.97	-13.00	-18.97	V

LTE FDD Band 7_Channel Bandwidth 15MHz_QPSK_ High Channel

Frequency (MHz)	P_{Mea} (dBm)	P_{cl} (dB)	Diatance	G_a Antenna Gain (dB)	Peak EIRP (dBm)	Limit (dBm)	Margin (dB)	Polarization
5125.00	-39.36	5.94	3.00	10.86	-34.44	-13.00	-21.44	H
7687.50	-45.79	7.25	3.00	12.98	-40.06	-13.00	-27.06	H
5125.00	-36.68	5.94	3.00	10.86	-31.76	-13.00	-18.76	V
7687.50	-37.07	7.25	3.00	12.98	-31.34	-13.00	-18.34	V

LTE FDD Band 7_Channel Bandwidth 20MHz_QPSK_ Low Channel

Frequency (MHz)	P_{Mea} (dBm)	P_{cl} (dB)	Diatance	G_a Antenna Gain (dB)	Peak EIRP (dBm)	Limit (dBm)	Margin (dB)	Polarization
5020.00	-38.87	5.88	3.00	10.77	-33.98	-13.00	-20.98	H
7530.00	-47.33	7.12	3.00	12.26	-42.19	-13.00	-29.19	H
5020.00	-34.06	5.88	3.00	10.77	-29.17	-13.00	-16.17	V
7530.00	-38.60	7.12	3.00	12.26	-33.46	-13.00	-20.46	V

This report shall not be reproduced except in full, without the written approval of Shenzhen LCS Compliance Testing Laboratory Ltd.

LTE FDD Band 7_Channel Bandwidth 20MHz_QPSK_ Middle Channel

Frequency (MHz)	P_{Mea} (dBm)	P_{cl} (dB)	Diatance	G_a Antenna Gain (dB)	Peak EIRP (dBm)	Limit (dBm)	Margin (dB)	Polarization
5070.00	-41.97	5.90	3.00	10.81	-37.06	-13.00	-24.06	H
7605.00	-45.08	7.19	3.00	12.32	-39.95	-13.00	-26.95	H
5070.00	-35.44	5.90	3.00	10.81	-30.53	-13.00	-17.53	V
7605.00	-39.35	7.19	3.00	12.32	-34.22	-13.00	-21.22	V

LTE FDD Band 7_Channel Bandwidth 20MHz_QPSK_ High Channel

Frequency (MHz)	P_{Mea} (dBm)	P_{cl} (dB)	Diatance	G_a Antenna Gain (dB)	Peak EIRP (dBm)	Limit (dBm)	Margin (dB)	Polarization
5120.00	-41.19	5.94	3.00	10.86	-36.27	-13.00	-23.27	H
7680.00	-47.61	7.25	3.00	12.98	-41.88	-13.00	-28.88	H
5120.00	-33.61	5.94	3.00	10.86	-28.69	-13.00	-15.69	V
7680.00	-39.30	7.25	3.00	12.98	-33.57	-13.00	-20.57	V

LTE FDD Band 7_Channel Bandwidth 5MHz_16QAM _ Low Channel

Frequency (MHz)	P_{Mea} (dBm)	P_{cl} (dB)	Diatance	G_a Antenna Gain (dB)	Peak EIRP (dBm)	Limit (dBm)	Margin (dB)	Polarization
5005.00	-42.40	5.88	3.00	10.77	-37.51	-13.00	-24.51	H
7507.50	-48.90	7.12	3.00	12.26	-43.76	-13.00	-30.76	H
5005.00	-37.12	5.88	3.00	10.77	-32.23	-13.00	-19.23	V
7507.50	-39.25	7.12	3.00	12.26	-34.11	-13.00	-21.11	V

LTE FDD Band 7_Channel Bandwidth 5MHz_16QAM _ Middle Channel

Frequency (MHz)	P_{Mea} (dBm)	P_{cl} (dB)	Diatance	G_a Antenna Gain (dB)	Peak EIRP (dBm)	Limit (dBm)	Margin (dB)	Polarization
5070.00	-44.52	5.90	3.00	10.81	-39.61	-13.00	-26.61	5070.00
7605.00	-46.67	7.19	3.00	12.32	-41.54	-13.00	-28.54	7605.00
5070.00	-39.88	5.90	3.00	10.81	-34.97	-13.00	-21.97	5070.00
7605.00	-41.47	7.19	3.00	12.32	-36.34	-13.00	-23.34	7605.00

LTE FDD Band 7_Channel Bandwidth 5MHz_16QAM _ High Channel

Frequency (MHz)	P_{Mea} (dBm)	P_{cl} (dB)	Diatance	G_a Antenna Gain (dB)	Peak EIRP (dBm)	Limit (dBm)	Margin (dB)	Polarization
5135.00	-41.07	5.94	3.00	10.86	-36.15	-13.00	-23.15	H
7702.50	-47.52	7.25	3.00	12.98	-41.79	-13.00	-28.79	H
5135.00	-38.15	5.94	3.00	10.86	-33.23	-13.00	-20.23	V
7702.50	-40.15	7.25	3.00	12.98	-34.42	-13.00	-21.42	V

LTE FDD Band 7_Channel Bandwidth 10MHz_16QAM _ Low Channel

Frequency (MHz)	P_{Mea} (dBm)	P_{cl} (dB)	Diatance	G_a Antenna Gain (dB)	Peak EIRP (dBm)	Limit (dBm)	Margin (dB)	Polarization
5010.00	-43.51	5.88	3.00	10.77	-38.62	-13.00	-25.62	H
7515.00	-47.43	7.12	3.00	12.26	-42.29	-13.00	-29.29	H
5010.00	-39.82	5.88	3.00	10.77	-34.93	-13.00	-21.93	V
7515.00	-41.80	7.12	3.00	12.26	-36.66	-13.00	-23.66	V

This report shall not be reproduced except in full, without the written approval of Shenzhen LCS Compliance Testing Laboratory Ltd.

LTE FDD Band 7_Channel Bandwidth 10MHz_16QAM _ Middle Channel

Frequency (MHz)	P_{Mea} (dBm)	P_{cl} (dB)	Diatance	G_a Antenna Gain (dB)	Peak EIRP (dBm)	Limit (dBm)	Margin (dB)	Polarization
5070.00	-44.98	5.90	3.00	10.81	-40.07	-13.00	-27.07	H
7605.00	-48.69	7.19	3.00	12.32	-43.56	-13.00	-30.56	H
5070.00	-37.50	5.90	3.00	10.81	-32.59	-13.00	-19.59	V
7605.00	-41.98	7.19	3.00	12.32	-36.85	-13.00	-23.85	V

LTE FDD Band 7_Channel Bandwidth 10MHz_16QAM _ High Channel

Frequency (MHz)	P_{Mea} (dBm)	P_{cl} (dB)	Diatance	G_a Antenna Gain (dB)	Peak EIRP (dBm)	Limit (dBm)	Margin (dB)	Polarization
5130.00	-42.30	5.94	3.00	10.86	-37.38	-13.00	-24.38	H
7695.00	-47.78	7.25	3.00	12.98	-42.05	-13.00	-29.05	H
5130.00	-39.62	5.94	3.00	10.86	-34.70	-13.00	-21.70	V
7695.00	-40.22	7.25	3.00	12.98	-34.49	-13.00	-21.49	V

LTE FDD Band 7_Channel Bandwidth 15MHz_16QAM _ Low Channel

Frequency (MHz)	P_{Mea} (dBm)	P_{cl} (dB)	Diatance	G_a Antenna Gain (dB)	Peak EIRP (dBm)	Limit (dBm)	Margin (dB)	Polarization
5015.00	-42.10	5.88	3.00	10.77	-37.21	-13.00	-24.21	H
7522.50	-49.81	7.12	3.00	12.26	-44.67	-13.00	-31.67	H
5015.00	-36.20	5.88	3.00	10.77	-31.31	-13.00	-18.31	V
7522.50	-40.76	7.12	3.00	12.26	-35.62	-13.00	-22.62	V

LTE FDD Band 7_Channel Bandwidth 15MHz_16QAM _ Middle Channel

Frequency (MHz)	P_{Mea} (dBm)	P_{cl} (dB)	Diatance	G_a Antenna Gain (dB)	Peak EIRP (dBm)	Limit (dBm)	Margin (dB)	Polarization
5070.00	-44.26	5.90	3.00	10.81	-39.35	-13.00	-26.35	H
7605.00	-46.72	7.19	3.00	12.32	-41.59	-13.00	-28.59	H
5070.00	-36.22	5.90	3.00	10.81	-31.31	-13.00	-18.31	V
7605.00	-42.96	7.19	3.00	12.32	-37.83	-13.00	-24.83	V

LTE FDD Band 7_Channel Bandwidth 15MHz_16QAM _ High Channel

Frequency (MHz)	P_{Mea} (dBm)	P_{cl} (dB)	Diatance	G_a Antenna Gain (dB)	Peak EIRP (dBm)	Limit (dBm)	Margin (dB)	Polarization
5125.00	-43.36	5.94	3.00	10.86	-38.44	-13.00	-25.44	H
7687.50	-47.10	7.25	3.00	12.98	-41.37	-13.00	-28.37	H
5125.00	-38.55	5.94	3.00	10.86	-33.63	-13.00	-20.63	V
7687.50	-42.10	7.25	3.00	12.98	-36.37	-13.00	-23.37	V

LTE FDD Band 7_Channel Bandwidth 20MHz_16QAM _ Low Channel

Frequency (MHz)	P_{Mea} (dBm)	P_{cl} (dB)	Diatance	G_a Antenna Gain (dB)	Peak EIRP (dBm)	Limit (dBm)	Margin (dB)	Polarization
5020.00	-43.49	5.88	3.00	10.77	-38.6	-13.00	-25.60	H
7530.00	-46.98	7.12	3.00	12.26	-41.84	-13.00	-28.84	H
5020.00	-39.33	5.88	3.00	10.77	-34.44	-13.00	-21.44	V
7530.00	-41.55	7.12	3.00	12.26	-36.41	-13.00	-23.41	V

This report shall not be reproduced except in full, without the written approval of Shenzhen LCS Compliance Testing Laboratory Ltd.

LTE FDD Band 7_Channel Bandwidth 20MHz_16QAM _ Middle Channel

Frequency (MHz)	P_{Mea} (dBm)	P_{cl} (dB)	Diatance	G_a Antenna Gain (dB)	Peak EIRP (dBm)	Limit (dBm)	Margin (dB)	Polarization
5070.00	-42.98	5.90	3.00	10.81	-38.07	-13.00	-25.07	H
7605.00	-46.85	7.19	3.00	12.32	-41.72	-13.00	-28.72	H
5070.00	-36.57	5.90	3.00	10.81	-31.66	-13.00	-18.66	V
7605.00	-42.49	7.19	3.00	12.32	-37.36	-13.00	-24.36	V

LTE FDD Band 7_Channel Bandwidth 20MHz_16QAM _ High Channel

Frequency (MHz)	P_{Mea} (dBm)	P_{cl} (dB)	Diatance	G_a Antenna Gain (dB)	Peak EIRP (dBm)	Limit (dBm)	Margin (dB)	Polarization
5120.00	-44.86	5.94	3.00	10.86	-39.94	-13.00	-26.94	H
7680.00	-46.51	7.25	3.00	12.98	-40.78	-13.00	-27.78	H
5120.00	-36.60	5.94	3.00	10.86	-31.68	-13.00	-18.68	V
7680.00	-39.60	7.25	3.00	12.98	-33.87	-13.00	-20.87	V

LTE FDD Band 12_Channel Bandwidth 1.4MHz_QPSK_ Low Channel

Frequency (MHz)	P_{Mea} (dBm)	P_{cl} (dB)	Diatance	G_a Antenna Gain (dB)	Peak EIRP (dBm)	Limit (dBm)	Margin (dB)	Polarization
1399.40	-38.52	3.71	3.00	9.02	-33.21	-13.00	-20.21	H
2099.10	-46.97	4.22	3.00	8.64	-42.55	-13.00	-29.55	H
1399.40	-33.17	3.71	3.00	9.02	-27.86	-13.00	-14.86	V
2099.10	-38.51	4.22	3.00	8.64	-34.09	-13.00	-21.09	V

LTE FDD Band 12_Channel Bandwidth 1.4MHz_QPSK_ Middle Channel

Frequency (MHz)	P_{Mea} (dBm)	P_{cl} (dB)	Diatance	G_a Antenna Gain (dB)	Peak EIRP (dBm)	Limit (dBm)	Margin (dB)	Polarization
1415.00	-38.01	3.72	3.00	9.04	-32.69	-13.00	-19.69	H
2122.50	-47.22	4.23	3.00	8.60	-42.85	-13.00	-29.85	H
1415.00	-33.61	3.72	3.00	9.04	-28.29	-13.00	-15.29	V
2122.50	-38.96	4.23	3.00	8.60	-34.59	-13.00	-21.59	V

LTE FDD Band 12_Channel Bandwidth 1.4MHz_QPSK_ High Channel

Frequency (MHz)	P_{Mea} (dBm)	P_{cl} (dB)	Diatance	G_a Antenna Gain (dB)	Peak EIRP (dBm)	Limit (dBm)	Margin (dB)	Polarization
1430.60	-39.13	4.78	3.00	8.91	-35.00	-13.00	-22.00	H
2145.90	-45.26	4.25	3.00	8.26	-41.25	-13.00	-28.25	H
1430.60	-36.71	4.78	3.00	8.91	-32.58	-13.00	-19.58	V
2145.90	-39.96	4.25	3.00	8.26	-35.95	-13.00	-22.95	V

LTE FDD Band 12_Channel Bandwidth 3MHz_QPSK_ Low Channel

Frequency (MHz)	P_{Mea} (dBm)	P_{cl} (dB)	Diatance	G_a Antenna Gain (dB)	Peak EIRP (dBm)	Limit (dBm)	Margin (dB)	Polarization
1401.00	-41.28	3.71	3.00	9.02	-35.97	-13.00	-22.97	H
2101.50	-45.90	4.22	3.00	8.64	-41.48	-13.00	-28.48	H
1401.00	-35.07	3.71	3.00	9.02	-29.76	-13.00	-16.76	V
2101.50	-38.30	4.22	3.00	8.64	-33.88	-13.00	-20.88	V

This report shall not be reproduced except in full, without the written approval of Shenzhen LCS Compliance Testing Laboratory Ltd.

LTE FDD Band 12_Channel Bandwidth 3MHz_QPSK_ Middle Channel

Frequency (MHz)	P_{Mea} (dBm)	P_{cl} (dB)	Diatance	G_a Antenna Gain (dB)	Peak EIRP (dBm)	Limit (dBm)	Margin (dB)	Polarization
1415.00	-38.54	3.72	3.00	9.04	-33.22	-13.00	-20.22	H
2122.50	-44.64	4.23	3.00	8.60	-40.27	-13.00	-27.27	H
1415.00	-33.35	3.72	3.00	9.04	-28.03	-13.00	-15.03	V
2122.50	-36.84	4.23	3.00	8.60	-32.47	-13.00	-19.47	V

LTE FDD Band 12_Channel Bandwidth 3MHz_QPSK_ High Channel

Frequency (MHz)	P_{Mea} (dBm)	P_{cl} (dB)	Diatance	G_a Antenna Gain (dB)	Peak EIRP (dBm)	Limit (dBm)	Margin (dB)	Polarization
1429.00	-38.11	4.78	3.00	8.91	-33.98	-13.00	-20.98	H
2143.50	-45.88	4.25	3.00	8.26	-41.87	-13.00	-28.87	H
1429.00	-35.18	4.78	3.00	8.91	-31.05	-13.00	-18.05	V
2143.50	-37.77	4.25	3.00	8.26	-33.76	-13.00	-20.76	V

LTE FDD Band 12_Channel Bandwidth 5MHz_QPSK_ Low Channel

Frequency (MHz)	P_{Mea} (dBm)	P_{cl} (dB)	Diatance	G_a Antenna Gain (dB)	Peak EIRP (dBm)	Limit (dBm)	Margin (dB)	Polarization
1403.00	-40.66	3.71	3.00	9.02	-35.35	-13.00	-22.35	H
2104.50	-45.82	4.22	3.00	8.64	-41.40	-13.00	-28.40	H
1403.00	-33.55	3.71	3.00	9.02	-28.24	-13.00	-15.24	V
2104.50	-39.47	4.22	3.00	8.64	-35.05	-13.00	-22.05	V

LTE FDD Band 12_Channel Bandwidth 5MHz_QPSK_ Middle Channel

Frequency (MHz)	P_{Mea} (dBm)	P_{cl} (dB)	Diatance	G_a Antenna Gain (dB)	Peak EIRP (dBm)	Limit (dBm)	Margin (dB)	Polarization
1415.00	-38.27	3.72	3.00	9.04	-32.95	-13.00	-19.95	H
2122.50	-44.68	4.23	3.00	8.60	-40.31	-13.00	-27.31	H
1415.00	-33.23	3.72	3.00	9.04	-27.91	-13.00	-14.91	V
2122.50	-36.91	4.23	3.00	8.60	-32.54	-13.00	-19.54	V

LTE FDD Band 12_Channel Bandwidth 5MHz_QPSK_ High Channel

Frequency (MHz)	P_{Mea} (dBm)	P_{cl} (dB)	Diatance	G_a Antenna Gain (dB)	Peak EIRP (dBm)	Limit (dBm)	Margin (dB)	Polarization
1427.00	-38.52	4.78	3.00	8.91	-34.39	-13.00	-21.39	H
2140.50	-46.48	4.25	3.00	8.26	-42.47	-13.00	-29.47	H
1427.00	-35.36	4.78	3.00	8.91	-31.23	-13.00	-18.23	V
2140.50	-37.11	4.25	3.00	8.26	-33.10	-13.00	-20.10	V

LTE FDD Band 12_Channel Bandwidth 10MHz_QPSK_ Low Channel

Frequency (MHz)	P_{Mea} (dBm)	P_{cl} (dB)	Diatance	G_a Antenna Gain (dB)	Peak EIRP (dBm)	Limit (dBm)	Margin (dB)	Polarization
1408.00	-39.97	3.71	3.00	9.02	-34.66	-13.00	-21.66	H
2112.00	-45.17	4.22	3.00	8.64	-40.75	-13.00	-27.75	H
1408.00	-36.67	3.71	3.00	9.02	-31.36	-13.00	-18.36	V
2112.00	-36.37	4.22	3.00	8.64	-31.95	-13.00	-18.95	V

This report shall not be reproduced except in full, without the written approval of Shenzhen LCS Compliance Testing Laboratory Ltd.

LTE FDD Band 12_Channel Bandwidth 10MHz_QPSK_ Middle Channel

Frequency (MHz)	P_{Mea} (dBm)	P_{cl} (dB)	Diatance	G_a Antenna Gain (dB)	Peak EIRP (dBm)	Limit (dBm)	Margin (dB)	Polarization
1415.00	-41.66	3.72	3.00	9.04	-36.34	-13.00	-23.34	H
2122.50	-44.42	4.23	3.00	8.60	-40.05	-13.00	-27.05	H
1415.00	-36.04	3.72	3.00	9.04	-30.72	-13.00	-17.72	V
2122.50	-39.03	4.23	3.00	8.60	-34.66	-13.00	-21.66	V

LTE FDD Band 12_Channel Bandwidth 10MHz_QPSK_ High Channel

Frequency (MHz)	P_{Mea} (dBm)	P_{cl} (dB)	Diatance	G_a Antenna Gain (dB)	Peak EIRP (dBm)	Limit (dBm)	Margin (dB)	Polarization
1422.00	-39.21	4.78	3.00	8.91	-35.08	-13.00	-22.08	H
2133.00	-47.01	4.25	3.00	8.26	-43.00	-13.00	-30.00	H
1422.00	-34.68	4.78	3.00	8.91	-30.55	-13.00	-17.55	V
2133.00	-38.65	4.25	3.00	8.26	-34.64	-13.00	-21.64	V

LTE FDD Band 12_Channel Bandwidth 1.4MHz_16QAM _ Low Channel

Frequency (MHz)	P_{Mea} (dBm)	P_{cl} (dB)	Diatance	G_a Antenna Gain (dB)	Peak EIRP (dBm)	Limit (dBm)	Margin (dB)	Polarization
1399.40	-41.73	3.71	3.00	9.02	-36.42	-13.00	-23.42	H
2099.10	-45.29	4.22	3.00	8.64	-40.87	-13.00	-27.87	H
1399.40	-35.54	3.71	3.00	9.02	-30.23	-13.00	-17.23	V
2099.10	-38.40	4.22	3.00	8.64	-33.98	-13.00	-20.98	V

LTE FDD Band 12_Channel Bandwidth 1.4MHz_16QAM _ Middle Channel

Frequency (MHz)	P_{Mea} (dBm)	P_{cl} (dB)	Diatance	G_a Antenna Gain (dB)	Peak EIRP (dBm)	Limit (dBm)	Margin (dB)	Polarization
1415.00	-41.44	3.72	3.00	9.04	-36.12	-13.00	-23.12	H
2122.50	-46.85	4.23	3.00	8.60	-42.48	-13.00	-29.48	H
1415.00	-35.60	3.72	3.00	9.04	-30.28	-13.00	-17.28	V
2122.50	-39.04	4.23	3.00	8.60	-34.67	-13.00	-21.67	V

LTE FDD Band 12_Channel Bandwidth 1.4MHz_16QAM _ High Channel

Frequency (MHz)	P_{Mea} (dBm)	P_{cl} (dB)	Diatance	G_a Antenna Gain (dB)	Peak EIRP (dBm)	Limit (dBm)	Margin (dB)	Polarization
1430.60	-38.61	4.78	3.00	8.91	-34.48	-13.00	-21.48	H
2145.90	-45.21	4.25	3.00	8.26	-41.2	-13.00	-28.20	H
1430.60	-36.44	4.78	3.00	8.91	-32.31	-13.00	-19.31	V
2145.90	-36.08	4.25	3.00	8.26	-32.07	-13.00	-19.07	V

LTE FDD Band 12_Channel Bandwidth 3MHz_16QAM _ Low Channel

Frequency (MHz)	P_{Mea} (dBm)	P_{cl} (dB)	Diatance	G_a Antenna Gain (dB)	Peak EIRP (dBm)	Limit (dBm)	Margin (dB)	Polarization
1401.00	-39.96	3.71	3.00	9.02	-34.65	-13.00	-21.65	H
2101.50	-46.57	4.22	3.00	8.64	-42.15	-13.00	-29.15	H
1401.00	-34.33	3.71	3.00	9.02	-29.02	-13.00	-16.02	V
2101.50	-39.13	4.22	3.00	8.64	-34.71	-13.00	-21.71	V

This report shall not be reproduced except in full, without the written approval of Shenzhen LCS Compliance Testing Laboratory Ltd.

LTE FDD Band 12_Channel Bandwidth 3MHz_16QAM _ Middle Channel

Frequency (MHz)	P_{Mea} (dBm)	P_{cl} (dB)	Diatance	G_a Antenna Gain (dB)	Peak EIRP (dBm)	Limit (dBm)	Margin (dB)	Polarization
1415.00	-38.73	3.72	3.00	9.04	-33.41	-13.00	-20.41	H
2122.50	-46.06	4.23	3.00	8.60	-41.69	-13.00	-28.69	H
1415.00	-35.36	3.72	3.00	9.04	-30.04	-13.00	-17.04	V
2122.50	-37.13	4.23	3.00	8.60	-32.76	-13.00	-19.76	V

LTE FDD Band 12_Channel Bandwidth 3MHz_16QAM _ High Channel

Frequency (MHz)	P_{Mea} (dBm)	P_{cl} (dB)	Diatance	G_a Antenna Gain (dB)	Peak EIRP (dBm)	Limit (dBm)	Margin (dB)	Polarization
1429.00	-38.31	4.78	3.00	8.91	-34.18	-13.00	-21.18	H
2143.50	-44.86	4.25	3.00	8.26	-40.85	-13.00	-27.85	H
1429.00	-35.64	4.78	3.00	8.91	-31.51	-13.00	-18.51	V
2143.50	-39.51	4.25	3.00	8.26	-35.5	-13.00	-22.50	V

LTE FDD Band 12_Channel Bandwidth 5MHz_16QAM _ Low Channel

Frequency (MHz)	P_{Mea} (dBm)	P_{cl} (dB)	Diatance	G_a Antenna Gain (dB)	Peak EIRP (dBm)	Limit (dBm)	Margin (dB)	Polarization
1403.00	-38.56	3.71	3.00	9.02	-33.25	-13.00	-20.25	H
2104.50	-45.23	4.22	3.00	8.64	-40.81	-13.00	-27.81	H
1403.00	-34.59	3.71	3.00	9.02	-29.28	-13.00	-16.28	V
2104.50	-36.88	4.22	3.00	8.64	-32.46	-13.00	-19.46	V

LTE FDD Band 12_Channel Bandwidth 5MHz_16QAM _ Middle Channel

Frequency (MHz)	P_{Mea} (dBm)	P_{cl} (dB)	Diatance	G_a Antenna Gain (dB)	Peak EIRP (dBm)	Limit (dBm)	Margin (dB)	Polarization
1415.00	-38.05	3.72	3.00	9.04	-32.73	-13.00	-19.73	H
2122.50	-47.39	4.23	3.00	8.60	-43.02	-13.00	-30.02	H
1415.00	-33.32	3.72	3.00	9.04	-28.00	-13.00	-15.00	V
2122.50	-37.60	4.23	3.00	8.60	-33.23	-13.00	-20.23	V

LTE FDD Band 12_Channel Bandwidth 5MHz_16QAM _ High Channel

Frequency (MHz)	P_{Mea} (dBm)	P_{cl} (dB)	Diatance	G_a Antenna Gain (dB)	Peak EIRP (dBm)	Limit (dBm)	Margin (dB)	Polarization
1427.00	-38.36	4.78	3.00	8.91	-34.23	-13.00	-21.23	H
2140.50	-46.63	4.25	3.00	8.26	-42.62	-13.00	-29.62	H
1427.00	-35.45	4.78	3.00	8.91	-31.32	-13.00	-18.32	V
2140.50	-37.59	4.25	3.00	8.26	-33.58	-13.00	-20.58	V

LTE FDD Band 12_Channel Bandwidth 10MHz_16QAM _ Low Channel

Frequency (MHz)	P_{Mea} (dBm)	P_{cl} (dB)	Diatance	G_a Antenna Gain (dB)	Peak EIRP (dBm)	Limit (dBm)	Margin (dB)	Polarization
1408.00	-41.42	3.71	3.00	9.02	-36.11	-13.00	-23.11	H
2112.00	-44.70	4.22	3.00	8.64	-40.28	-13.00	-27.28	H
1408.00	-36.49	3.71	3.00	9.02	-31.18	-13.00	-18.18	V
2112.00	-38.13	4.22	3.00	8.64	-33.71	-13.00	-20.71	V

This report shall not be reproduced except in full, without the written approval of Shenzhen LCS Compliance Testing Laboratory Ltd.

LTE FDD Band 12_Channel Bandwidth 10MHz_16QAM _ Middle Channel

Frequency (MHz)	P_{Mea} (dBm)	P_{cl} (dB)	Diatance	G_a Antenna Gain (dB)	Peak EIRP (dBm)	Limit (dBm)	Margin (dB)	Polarization
1415.00	-39.08	3.72	3.00	9.04	-33.76	-13.00	-20.76	H
2122.50	-45.82	4.23	3.00	8.60	-41.45	-13.00	-28.45	H
1415.00	-35.97	3.72	3.00	9.04	-30.65	-13.00	-17.65	V
2122.50	-36.52	4.23	3.00	8.60	-32.15	-13.00	-19.15	V

LTE FDD Band 12_Channel Bandwidth 10MHz_16QAM _ High Channel

Frequency (MHz)	P_{Mea} (dBm)	P_{cl} (dB)	Diatance	G_a Antenna Gain (dB)	Peak EIRP (dBm)	Limit (dBm)	Margin (dB)	Polarization
1422.00	-39.70	4.78	3.00	8.91	-35.57	-13.00	-22.57	H
2133.00	-46.27	4.25	3.00	8.26	-42.26	-13.00	-29.26	H
1422.00	-35.42	4.78	3.00	8.91	-31.29	-13.00	-18.29	V
2133.00	-37.66	4.25	3.00	8.26	-33.65	-13.00	-20.65	V

This report shall not be reproduced except in full, without the written approval of Shenzhen LCS Compliance Testing Laboratory Ltd.

4.7 Frequency Stability under Temperature & Voltage Variations

LIMIT

According to FCC §2.1055, §22.355, §24.235 and §27.54 requirement, the frequency stability shall be sufficient to ensure that the fundamental emissions stay within the authorized bands of operation and should not exceed 2.5ppm.

TEST CONFIGURATION

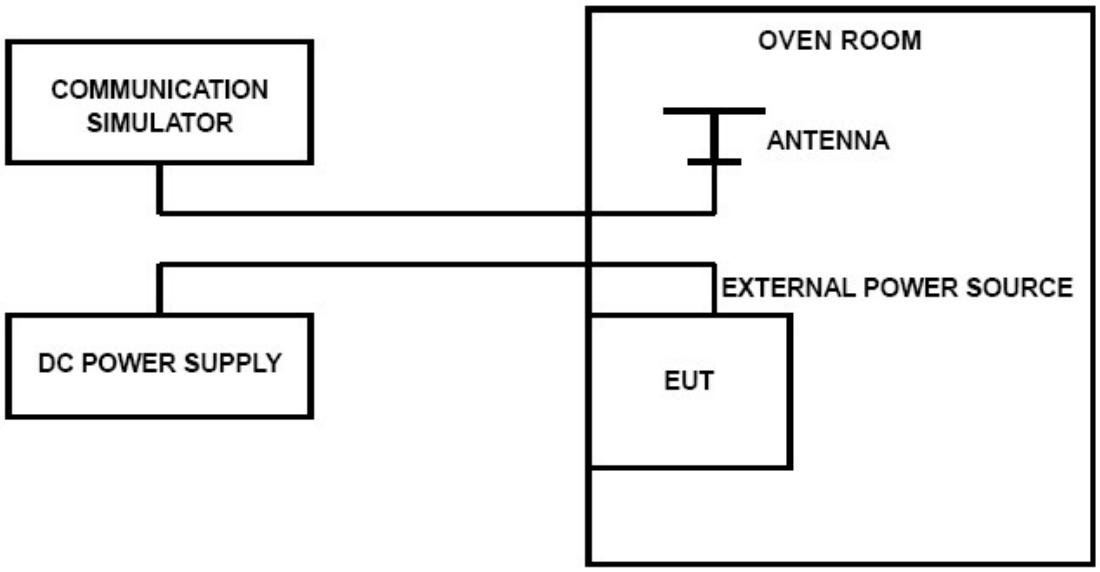

TEST PROCEDURE

The EUT was setup according to EIA/TIA 603D

Frequency Stability Under Temperature Variations:
In order to measure the carrier frequency under the condition of AFC lock, it is necessary to make measurements with the EUT in a “call mode”. This is accomplished with the use of R&S CMW500 DIGITAL RADIO COMMUNICATION TESTER.
1. Measure the carrier frequency at room temperature.
2. Subject the EUT to overnight soak at -30℃.
3. With the EUT, powered via nominal voltage, connected to the CMW500 and in a simulated call on middle channel for LTE band 2, LTE band 5, LTE band 7 and LTE band 12; measure the carrier frequency. These measurements should be made within 2 minutes of Powering up the EUT, to prevent significant self-warming.
4. Repeat the above measurements at 10℃ increments from -30℃ to +50℃. Allow at least 1.5 hours at each temperature, unpowered, before making measurements.
5. Re-measure carrier frequency at room temperature with nominal voltage. Vary supply voltage from minimum voltage to maximum voltage, in 0.1Volt increments re-measuring carrier frequency at each voltage. Pause at nominal voltage for 1.5 hours unpowered, to allow any self-heating to stabilize, before continuing.
6. Subject the EUT to overnight soak at +50℃.
7. With the EUT, powered via nominal voltage, connected to the CMW500 and in a simulated call on the centre channel, measure the carrier frequency. These measurements should be made within 2 minutes of Powering up the EUT, to prevent significant self-warming.
8. Repeat the above measurements at 10 ℃ increments from +50℃ to -30℃. Allow at least 1.5 hours at each temperature, unpowered, before making measurements
9. At all temperature levels hold the temperature to +/- 0.5℃ during the measurement procedure.

Frequency Stability Under Voltage Variations:
Set chamber temperature to 20℃. Use a variable AC power supply / DC power source to power the EUT and set the voltage to rated voltage. Set the spectrum analyzer RBW low enough to obtain the desired frequency resolution and recorded the frequency.
Reduce the input voltage to specify extreme voltage variation (±15%) and endpoint, record the maximum frequency change.

TEST RESULTS

Remark:
1. We were tested all RB Configuration refer 3GPP TS136 521 for each Channel Bandwidth of LTE FDD Band 2, LTE FDD Band 5, LTE FDD Band 7,LTE FDD Band 12;

LTE Band 2, 1.4MHz bandwidth, QPSK (worst case of all bandwidths)

LTE FDD Band 2					
DC Power	Temperature (℃)	Frequency error(Hz)	Frequency error(ppm)	Limit (ppm)	Verdict
6.70	20	12	0.006	2.50	PASS
7.40	20	-10	-0.005	2.50	PASS
8.40	20	-9	-0.005	2.50	PASS
7.40	-30	-9	-0.005	2.50	PASS
7.40	-20	12	0.006	2.50	PASS
7.40	-10	8	0.004	2.50	PASS
7.40	0	10	0.005	2.50	PASS
7.40	10	-8	-0.004	2.50	PASS
7.40	20	-9	-0.005	2.50	PASS
7.40	30	10	0.005	2.50	PASS
7.40	40	11	0.006	2.50	PASS
7.40	50	10	0.005	2.50	PASS

LTE Band 2, 1.4MHz bandwidth, 16QAM (worst case of all bandwidths)

LTE FDD Band 2					
DC Power	Temperature (℃)	Frequency error(Hz)	Frequency error(ppm)	Limit (ppm)	Verdict
6.70	20	11	0.006	2.50	PASS
7.40	20	-12	-0.006	2.50	PASS
8.40	20	-13	-0.007	2.50	PASS
7.40	-30	9	0.005	2.50	PASS
7.40	-20	8	0.004	2.50	PASS
7.40	-10	11	0.006	2.50	PASS
7.40	0	14	0.007	2.50	PASS
7.40	10	-8	-0.004	2.50	PASS
7.40	20	-9	-0.005	2.50	PASS
7.40	30	-7	-0.004	2.50	PASS
7.40	40	11	0.006	2.50	PASS
7.40	50	7	0.004	2.50	PASS

LTE Band 5, 1.4MHz bandwidth, QPSK (worst case of all bandwidths)

LTE FDD Band 5					
DC Power	Temperature (℃)	Frequency error(Hz)	Frequency error(ppm)	Limit (ppm)	Verdict
6.70	20	-6	-0.007	2.50	PASS
7.40	20	9	0.011	2.50	PASS
8.40	20	7	0.008	2.50	PASS
7.40	-30	12	0.014	2.50	PASS
7.40	-20	-14	-0.017	2.50	PASS
7.40	-10	-10	-0.012	2.50	PASS
7.40	0	-7	-0.008	2.50	PASS
7.40	10	8	0.010	2.50	PASS
7.40	20	12	0.014	2.50	PASS
7.40	30	10	0.012	2.50	PASS
7.40	40	-9	-0.011	2.50	PASS
7.40	50	-8	-0.010	2.50	PASS

This report shall not be reproduced except in full, without the written approval of Shenzhen LCS Compliance Testing Laboratory Ltd.

LTE Band 5, 1.4MHz bandwidth, 16QAM (worst case of all bandwidths)

LTE FDD Band 5					
DC Power	Temperature (℃)	Frequency error(Hz)	Frequency error(ppm)	Limit (ppm)	Verdict
6.70	20	10	0.012	2.50	PASS
7.40	20	-11	-0.013	2.50	PASS
8.40	20	-9	-0.011	2.50	PASS
7.40	-30	8	0.010	2.50	PASS
7.40	-20	-12	-0.014	2.50	PASS
7.40	-10	-11	-0.013	2.50	PASS
7.40	0	7	0.008	2.50	PASS
7.40	10	13	0.016	2.50	PASS
7.40	20	8	0.010	2.50	PASS
7.40	30	-9	-0.011	2.50	PASS
7.40	40	10	0.012	2.50	PASS
7.40	50	11	0.013	2.50	PASS

LTE Band 7, QPSK, 1.4MHz bandwidth(worst case of all bandwidths)

LTE FDD Band 7					
DC Power	Temperature (℃)	Frequency error(Hz)	Frequency error(ppm)	Limit (ppm)	Verdict
6.70	20	-12	-0.005	2.50	PASS
7.40	20	10	0.004	2.50	PASS
8.40	20	8	0.003	2.50	PASS
7.40	-30	-9	-0.004	2.50	PASS
7.40	-20	13	0.005	2.50	PASS
7.40	-10	-12	-0.005	2.50	PASS
7.40	0	-8	-0.003	2.50	PASS
7.40	10	7	0.003	2.50	PASS
7.40	20	10	0.004	2.50	PASS
7.40	30	13	0.005	2.50	PASS
7.40	40	-11	-0.004	2.50	PASS
7.40	50	9	0.004	2.50	PASS

LTE Band 7, 16QAM, 1.4MHz bandwidth(worst case of all bandwidths)

LTE FDD Band 7					
DC Power	Temperature (℃)	Frequency error(Hz)	Frequency error(ppm)	Limit (ppm)	Verdict
6.70	20	-15	-0.006	2.50	PASS
7.40	20	10	0.004	2.50	PASS
8.40	20	13	0.005	2.50	PASS
7.40	-30	9	0.004	2.50	PASS
7.40	-20	-8	-0.003	2.50	PASS
7.40	-10	-12	-0.005	2.50	PASS
7.40	0	10	0.004	2.50	PASS
7.40	10	8	0.003	2.50	PASS
7.40	20	7	0.003	2.50	PASS
7.40	30	9	0.004	2.50	PASS
7.40	40	-6	-0.002	2.50	PASS
7.40	50	10	0.004	2.50	PASS

This report shall not be reproduced except in full, without the written approval of Shenzhen LCS Compliance Testing Laboratory Ltd.

LTE Band 12, QPSK, 5MHz bandwidth (worst case of all bandwidths)

LTE FDD Band 12					
DC Power	Temperature (℃)	Frequency error(Hz)	Frequency error(ppm)	Limit (ppm)	Verdict
6.70	20	10	0.014	2.50	PASS
7.40	20	9	0.013	2.50	PASS
8.40	20	-10	-0.014	2.50	PASS
7.40	-30	-11	-0.016	2.50	PASS
7.40	-20	8	0.011	2.50	PASS
7.40	-10	9	0.013	2.50	PASS
7.40	0	-11	-0.016	2.50	PASS
7.40	10	-12	-0.017	2.50	PASS
7.40	20	7	0.010	2.50	PASS
7.40	30	-9	-0.013	2.50	PASS
7.40	40	12	0.017	2.50	PASS
7.40	50	-11	-0.016	2.50	PASS

LTE Band 12, 16QAM, 5MHz bandwidth (worst case of all bandwidths)

LTE FDD Band 12					
DC Power	Temperature (℃)	Frequency error(Hz)	Frequency error(ppm)	Limit (ppm)	Verdict
6.70	20	-11	-0.016	2.50	PASS
7.40	20	12	0.017	2.50	PASS
8.40	20	-9	-0.013	2.50	PASS
7.40	-30	-8	-0.011	2.50	PASS
7.40	-20	11	0.016	2.50	PASS
7.40	-10	10	0.014	2.50	PASS
7.40	0	13	0.018	2.50	PASS
7.40	10	-9	-0.013	2.50	PASS
7.40	20	9	0.013	2.50	PASS
7.40	30	8	0.011	2.50	PASS
7.40	40	-10	-0.014	2.50	PASS
7.40	50	11	0.016	2.50	PASS

This report shall not be reproduced except in full, without the written approval of Shenzhen LCS Compliance Testing Laboratory Ltd.

5 Test Setup Photos of the EUT

Please refer to separated files for Test Setup Photos of the EUT.

6 External Photos of the EUT

Please refer to separated files for External Photos of the EUT.

7 Internal Photos of the EUT

Please refer to separated files for Internal Photos of the EUT.

**********End of Report**********

This report shall not be reproduced except in full, without the written approval of Shenzhen LCS Compliance Testing Laboratory Ltd.