FiPy Module

Datasheet

Version 1.0

pycom
GO INVENT

1.0 Overview 03

2.0 Features 03

3.0 Specifications 04

3.1 CPU 04
3.2 Memory 04
3.3 WiFi 04
3.4 Bluetooth 04
3.5 LoRa 04
3.6 Sigfox 04
3.7 LTE CAT–M1 04
3.8 RTC 04
3.9 Security 04
3.10 Hash / encryption 04

4.0 Block Diagram 04

5.0 Pinout 05

6.0 Pin Details 06

6.1 Remapping Pins 07

7.0 ESP32 Peripherals 08

7.1 RTC 08

8.0 Programming the device 08

8.1 UART 08
8.2 Wi–Fi 08
8.2.1 Telnet 08
8.2.2 FTP 08

9.0 Boot modes 09

9.1 Bootloader mode 09
9.2 Safe boot 09

10.0 Power 09

10.1 Current consumption by power modes/features measured at 5V 09

11.0 Memory Map 10

11.1 Flash 10
11.2 RAM 10
11.3 ROM and eFuses 10

12.0 WiFi 11

12.1 Supported features 11
12.2 Specifications 11

13.0 Bluetooth 12

13.1 Supported features 12
13.2 Specification 12
13.2.1 Receiver – Basic Data Rate 12
13.2.2 Receiver – Enhanced Data Rate 13
13.2.3 Receiver – Bluetooth LE 14
13.2.4 Transmitter – Basic Data Rate 15
13.2.5 Transmitter – Enhanced Data Rate 16
13.2.6 Transmitter – Bluetooth LE 17

14.0 LoRa 17

14.1 Supported features 17
14.2 Specifications 18

15.0 Sigfox 22

15.1 Frequencies 22
15.2 Specifications 23

16.0 LTE CAT–M1 24

16.1 Supported features 24
16.2 Specifications 24
16.2.1 Supported LTE bands 24
16.3 SIM Card requirements 24
16.4 Certified carriers 24

17.0 6LoWPAN 25

18.0 Electrical Characteristics 25

18.1 Absolute maximum ratings 25
18.2 Input/Output characteristics 25

19.0 Minimum Recommended Circuit 26

20.0 Mechanical Specifications 27

21.0 Recommended Land Pattern 27

22.0 Soldering Profile 28

23.0 Ordering Information 28

24.0 Packaging 28

25.0 Certification 29

25.1 EU Regulatory Conformance 29
25.2 Federal Communication Commission Interference Statement 29
25.2.1 RF Warning Statement 29
25.2.2 OEM integrator conditions 29
25.2.3 End Product Labelling 30
25.2.4 Manual Information to the End User 30

26.0 Revision History 30

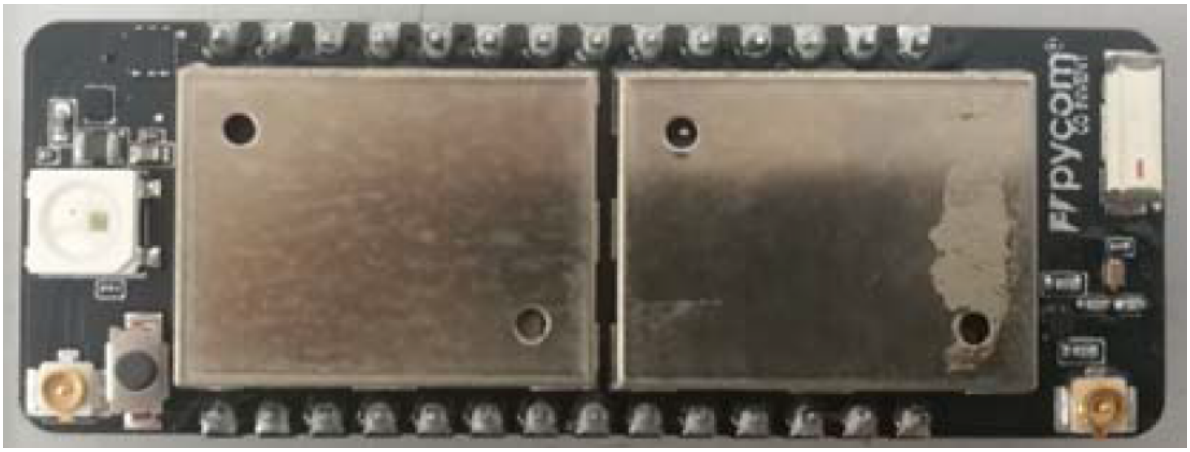

1.0 Overview

With Sigfox, LoRa, WiFi, BLE and cellular LTE–CAT M1, the FiPy is the latest Pycom MicroPython enabled micro controller on the market today – the perfect enterprise grade IoT platform for your connected Things. Create and connect your things everywhere. Fast.

2.0 Features

- Five Networks: WiFi, BLE, cellular LTE–CAT M1, LoRa and Sigfox
- Powerful CPU.
- Can also double up as a Nano LoRa gateway
- MicroPython enabled
- Fits in a standard breadboard (with headers)
- Ultra–low power usage: a fraction compared to other connected micro controllers
- World ready, one product covers all LTE–M bands

3.0 Specifications

3.1 CPU

- Xtensa® dual–core 32–bit LX6 microprocessor(s), up to 600 DMIPS
- Hardware floating point acceleration
- Python multi–threading
- An extra ULP–coprocessor that can monitor GPIOs, the ADC channels and control most of the internal peripherals during deep–sleep mode while only consuming 25uA.

3.2 Memory

- RAM: 520KB + 4MB
- External flash: 8MB

3.3 WiFi

- 802.11b/g/n 16mbps

3.4 Bluetooth

- Low energy and classic

3.5 LoRa

- LoRaWAN stack – Class A and C devices
- Node range: Up to 40km
- Nano–gateway: Up to 22km
  (Capacity up to 100 nodes)

3.6 Sigfox

- Class 0 device. Maximum Tx power: 19.58dBm
- Node range: Up to 50km

3.7 LTE CAT–M1

- One single chip for CAT M1
- 3GPP release 13 LTE Advanced Pro
- Supports narrowband LTE UE categories M1
- Integrated baseband, RF, RAM memory and power management
- Reduced TX power class option
- Peak power estimations:
  TX current = 420mA peak @1.5Watt
  RX current = 330mA peak @1.2Watt
- Extended DRX (eDRX) and PSM features for long sleep duration use cases

3.8 RTC

- Running at 32KHz

3.9 Security

- SSL/TLS support
- WPA Enterprise security

3.10 Hash / encryption

- SHA
- MD5
- DES
- AES

4.0 Block Diagram

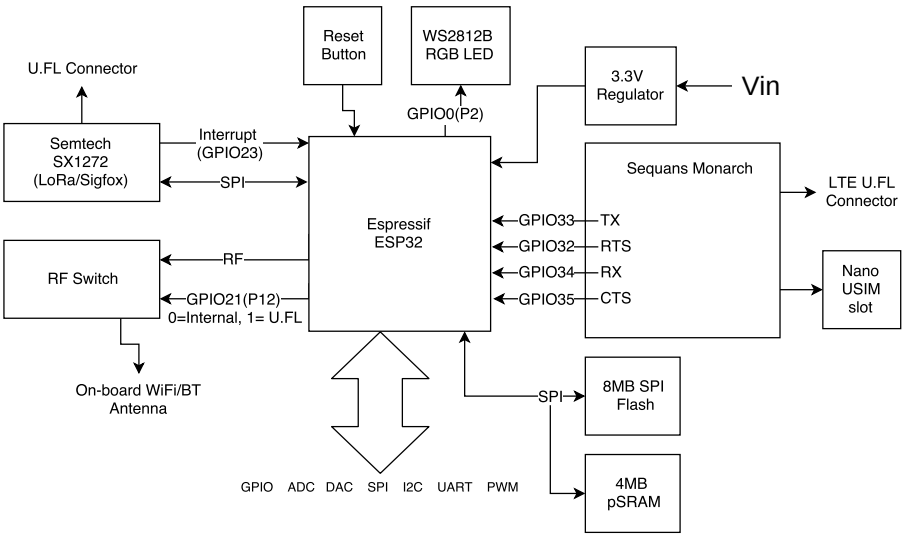

Figure 1 – System block diagram

5.0 Pinout

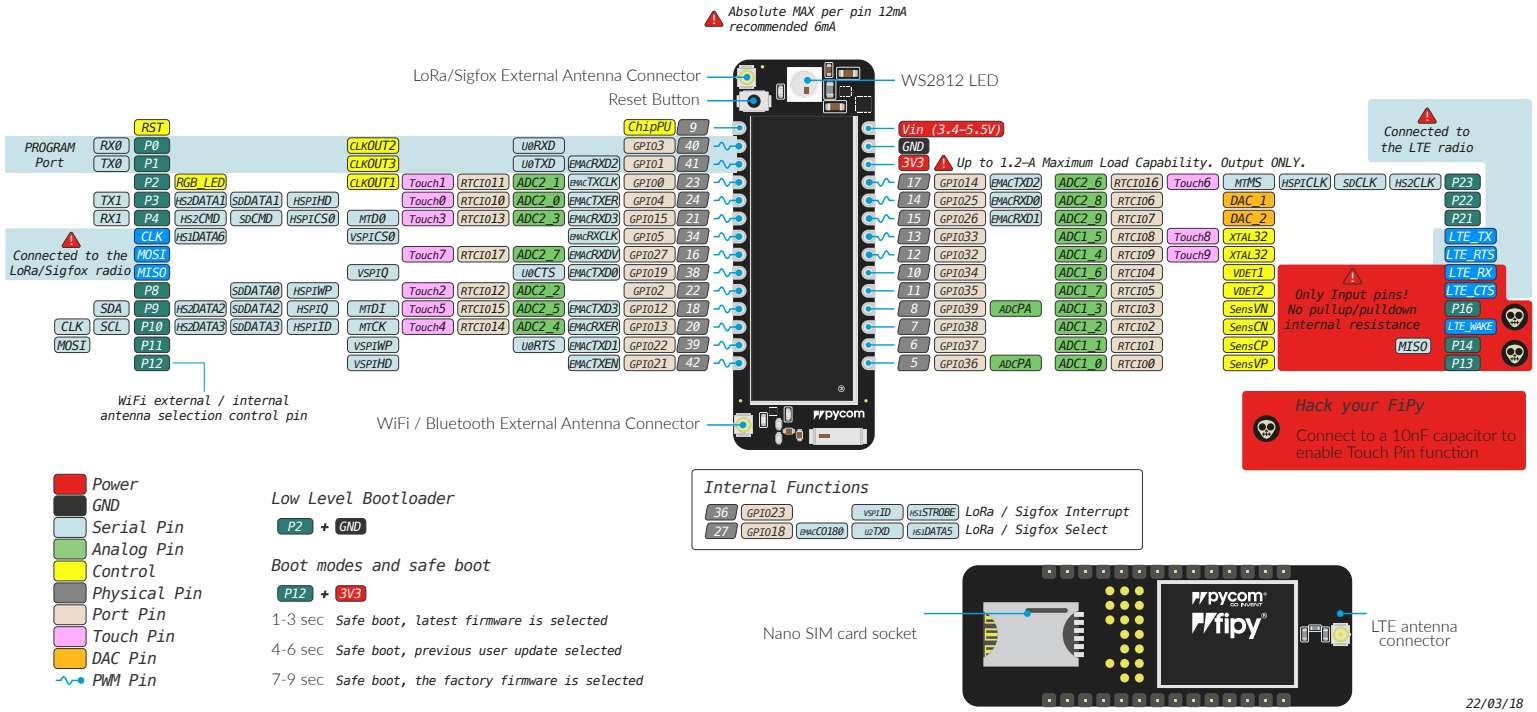

Figure 2 – Module pinout diagram

Note: The ESP32 supports remapping its peripherals to alternative pins. See below for a detailed list.

6.0 Pin Details

Table 1 – Module pinout

Module Pin	ESP32 GPIO	Pin Name	Default Function	ADC	PWM	RTC†	Notes
1	–		Reset				Active Low, connected to on–board button
2	3	P0	RX0 (Programming)		•		Used by the bootloader and to program the module
3	1	P1	TX0 (Programming)		•		Used by the bootloader and to program the module
4	0	P2		2*	•	•	If tied to GND during boot the device will enter bootloader mode. Connected to the on–board RGB LED
5	4	P3	TX1	2*	•	•	
6	15	P4	RX1	2*	•	•	JTAG TDO, SD card CMD
7	5	–	LoRa/Sigfox radio SPI CLK		•		Not recommended for external use
8	27	–	LoRa/Sigfox radio SPI MOSI	2*	•	•	Not recommended for external use
9	19	–	LoRa/Sigfox radio SPI MISO		•		Not recommended for external use
10	2	P8		2*	•	•	SD card DAT0
11	12	P9	SDA	2*	•	•	JTAG TDI
12	13	P10	SCL (I2C) / CLK (SPI)	2*	•	•	JTAG TCK
13	22	P11	MOSI		•		
14	21	P12			•		If tied to 3.3V during boot the device enters safe boot mode, JTAG MISO, External WiFi/BT antenna switch, Low = on–board, High = U.FL
15	36	P13		1		•	Input only
16	37	P14	MISO	1		•	Input only
17	38	P15	Sequans modem interrupt	1		•	Input only, not recommended for external use
18	39	P16		1		•	Input only

6.0 Pin Details

Table 1 – Module pinout

Module Pin	ESP32 GPIO	Pin Name	Default Function	ADC	PWM	RTC†	Notes
19	35	P17	Sequans modem CTS	1		•	Input only, not recommended for external use
20	34	P18	Sequans modem RX	1		•	Input only, not recommended for external use, 921600 Baud
21	32	P19	Sequans modem RTS	1	•	•	Not recommended for external use
22	33	P20	Sequans modem TX	1	•	•	Not recommended for external use, 921600 Baud
23	26	P21		2*	•	•	DAC
24	25	P22		2*	•	•	DAC
25	14	P23		2*	•	•	JTAG TMS, SD card SCLK
26	–	–	Regulated 3.3V supply				Output only, do not feed 3.3V into this pin or you can damage the regulator
27	–	–	Ground				
28	–	–	Voltage Input				Accepts a voltage between 3.4V and 5.5V
–	23	–	LoRa/Sigfox radio interrupt				
–	18	–	LoRa/Sigfox radio chip select				

† The pins on the RTC power domain can be used during deep sleep, specifically GPIO pins will maintain their state while in deep sleep.

* ADC2 is currently not supported in the micropython firmware

6.1 Remapping Pins

The ESP32 features comprehensive pin remapping functionality. This allows peripherals to be mapped onto almost any available GPIO pins. The above table merely shows the default assignments. For example, the default mapping has the SPI and I2C clocks overlapping, meaning both cannot be used simultaneously without remapping one to a different pin. For a detailed guide of what peripheral can be assigned to what pins please read “Appendix A – ESP32 Pin Lists” of the ESP32 datasheet.

7.0 ESP32 Peripherals

Table 2 – Peripherals

Peripheral	Count	Pins
UART	3	Remappable to any GPIO. Note: P13–18 can only be mapped to RX or CTS since they are input only.
I2C	2	Remappable to any GPIO except P13–18 since they are input only and I2C is bi–directional.
SPI	3	Remappable to any GPIO. Note: P13–18 can only be mapped to MISO since they are input only.
CAN*	1	Remappable to any GPIO. Note: P13–18 can only be mapped to RX since they are input only.
JTAG	1	TDO = P4, TDI = P9, TCK = P10, TMS = P24
PWM	1	All GPIO except P13–18 which are input only
ADC	18	Fixed mapping, see Table 1, Only ADC 1 is supported in our micropython firmware.
DAC	2	Only available on P21 and P22
SD	1	DAT0 = P8, SCLK = P23, CMD = P4

* Requires an external CAN bus transceiver, we recommend the SN65HVD230 from Texas Instruments.

For a more detailed description of the ESP32 peripherals along with peripherals not currently supported by our firmware, please check the ESP32 datasheet.

7.1 RTC

Our modules by default all use the internal RC oscillator at 150kHz for the RTC. In the case of the FiPy, the external RTC pins are used by the LTE module, and therefore the external RTC oscillator is not available.

8.0 Programming the device

8.1 UART

By default, the modules run an interactive python REPL on UART0 which is connected to P0 (RX) and P1 (TX) running at 115200 baud. The easiest way to connect to the FiPy is via our expansion board, but any USB UART adapter will suffice. Code can be run via this interactive REPL or you can use our PyMakr plugin for Atom or Visual Studio Code to upload code to the board.

8.2 Wi–Fi

By default, the FiPy also acts as a Wi–Fi access point
SSID: fipy–wlan–XXXX
Password: www.pycom.io
Once connected to the FiPy's Wi–Fi network you can access it in two ways.

8.2.1 Telnet

Running on port 23 is a telnet server. This acts in a very similar way to the UART. It presents you with an interactive REPL and can also be used to upload code via PyMakr.

8.2.2 FTP

The FiPy also runs a FTP server that allows you to copy files to and from the device, include an SD card if one is connected. To connect to this FTP server, you need to use plain FTP (un–encrypted) with the following credentials:
User: micro
Password: python

9.0 Boot modes

9.1 Bootloader mode

In order to update the firmware of the FiPy device, it needs to be placed into bootloader mode. In order to do this, P2 needs to be connected to ground when the device reboots. Once in bootloader mode you can use the Pycom firmware update tool to update to the latest official firmware. If you are developing your own firmware based on our open–source firmware, a flashing script is provided with the source code.

9.2 Safe boot

The micropython firmware features a safe boot feature that skips the boot.py and main.py scripts and goes straight to the REPL. This is useful if the device is programmed with code that causes the device to crash or become inaccessible. To access this mode, you need to connect P12 to 3.3V and reset the device. Upon entering safe boot mode, the on–board LED will begin to blink orange. Depending on the duration the pin is held at 3.3V, a different firmware will be run.

Table 3 – Boot modes

0–3 Seconds	3–6 Seconds
Current firmware without running boot.py or main.py	Previous firmware if the firmware was uploaded via OTA (without running boot.py and main.py)

10.0 Power

The FiPy features an on–board voltage regulator that takes 3.4V – 5.5V from the VIN pin and regulates it to 3.3V. It is important to only use the 3.3V as an output and not try to feed 3.3V into this pin as this could damage the regulator.

10.1 Current consumption by power modes/features measured at 3.3V

Table 4 – Power consumption by feature

Mode	Min	Avg.	Max	Units
Idle (no radios)	-	62.7	-	mA
LoRa Transmit*	-	156	-	mA
Sigfox Transmit†	-	192	-	mA
LTE Transmit	-	173	285	mA
LTE Attached	-	74.5	-	mA
WiFi AP	-	126	-	mA
WiFi client	-	137	-	mA
Bluetooth	-	121	-	mA
Deep sleep	-	24	-	µA

* More details can be found in section 14.2

† More details can be found in section 15.2

11.0 Memory Map

11.1 Flash

Table 5 – Flash memory map

Name	Description	Start address	Size
NVS	Non–volatile RAM area. Used by the NVS API	0x9000	0x7000
Firmware Slot 0	First firmware slot. Factory firmware is flashed here	0x10000	0x180000
OTA info	Information about the current active firmware	0x190000	0x1000
Firmware Slot 1	Second firmware slot	0x1A0000	0x180000
File system	504KB file system on devices with 4MB flash	0x380000	0x7F000
Config	Config area for LoRa, Sigfox and LTE	0x3FF000	0x1000
File system (2)	4MB file system on devices with 8MB flash	0x400000	0x400000

11.2 RAM

Table 6 – RAM memory map

Name	Description	Size
On–chip SRAM	Internal RAM memory used by the 2 xtensa CPUs	520KB
Fast RTC RAM	Fast RAM area accessible by the xtensa cores during boot and sleep modes	8KB
Slow RTC RAM	Slow RAM area accessible by the Ultra–Low Power Coprocessor during deep sleep	8KB
External pSRAM	External QSPI RAM memory clocked @ 40MHz	4MB

11.3 ROM and eFuses

Table 7 – Miscellaneous memory

Name	Description	Size
On–chip ROM	Contains core functions and boot code.	448KB
eFuse	256 bits are used for the system (MAC address and chip configuration) and the remaining 768 bits are reserved for customer applications, including Flash–Encryption and Chip–ID	1kbit

12.0 WiFi

12.1 Supported features

- 802.11 b/g/n
- 802.11 n (2.4 GHz), up to 150 Mbps
- 802.11 e: QoS for wireless multimedia technology
- WMM–PS, UAPSD
- A–MPDU and A–MSDU aggregation –
- Block ACK
- Fragmentation and defragmentation
- Automatic Beacon monitoring/scanning
- 802.11 i security features: pre–authentication and TSN
- Wi–Fi Protected Access (WPA)/WPA2/WPA2–Enterprise/Wi–Fi Protected Setup (WPS)
- Infrastructure BSS Station mode/SoftAP mode
- Wi–Fi Direct (P2P), P2P Discovery, P2P Group Owner mode and P2P Power Management

12.2 Specifications

Table 8 – WiFi specifications

Description	Min	Typ.	Max	Unit
Input Frequency	2412	–	2462	MHz
Output power of PA for 11b mode	20.61	21.51	22.25	dBm
Sensitivity				
DSSS, 1Mbps	–	–	-98	dBm
CCK, 11 Mbps	–	–	-91	dBm
OFDM, 6 Mbps	–	–	-93	dBm
OFDM, 54 Mbps	–	–	-75	dBm
HT20, MCS0	–	–	-93	dBm
HT20, MCS7	–	–	-73	dBm
HT40, MCS0	–	–	-90	dBm
HT40, MCS7	–	–	-70	dBm
Adjacent channel rejection				
OFDM, 6 Mbps	–	37	–	dB
OFDM, 54 Mbps	–	21	–	dB
HT20, MCS0	–	37	–	dB
HT20, MCS7	–	20	–	dB

13.0 Bluetooth

13.1 Supported features

- Compliant with Bluetooth v4.2 BR/EDR and BLE specification
- class–2 transmitter without external power amplifier external power amplifier
- Enhanced power control
- +12 dBm transmitting power
- NZIF receiver with –97 dBm sensitivity
- Adaptive Frequency Hopping (AFH)
- Standard HCI based on SDIO/SPI/UART
- High–speed UART HCI, up to 4 Mbps
- BT 4.2 controller and host stack
- Service Discover Protocol (SDP)
- General Access Profile (GAP)
- Security Manage Protocol (SMP)
- ATT/GATT
- HID
- All GATT–based profile supported
- SPP–like GATT–based profile
- BLE Beacon
- A2DP/AVRCP/SPP, HSP/HFP, RFCOMM
- CVSD and SBC for audio codec
- Bluetooth Piconet and Scatternet

13.2 Specification

13.2.1 Receiver – Basic Data Rate

Table 9 – Receiver (basic data rate) specifications

Parameter		Min	Typ.	Max	Unit
Sensitivity @0.1% BER		–	–94	–	dBm
Maximum received signal @0.1% BER		0	–	–	dBm
Co–channel C/I		–	+7	–	dB
Adjacent channel selectivity C/I	F = F0 + 1 MHz	–	–	–6	dB
	F = F0 – 1 MHz	–	–	–6	dB
	F = F0 + 2 MHz	–	–	–25	dB
	F = F0 – 2 MHz	–	–	–33	dB
	F = F0 + 3 MHz	–	–	–25	dB
	F = F0 – 3 MHz	–	–	–45	dB
Out–of–band blocking performance	30Mhz ~ 2000MHz	–10	–	–	dBm
	2000MHz ~ 2400MHz	–27	–	–	dBm
	2500MHz ~ 3000MHz	–27	–	–	dBm
	3000MHz ~ 12.5GHz	–10	–	–	dBm
Intermodulation		–36	–	–	dBm

13.2.2 Receiver – Enhanced Data Rate

Table 10 – Receiver (basic data rate) specifications

Parameter		Min	Typ.	Max	Unit
		π/4 DQPSK			
Sensitivity @0.1% BER		–	–90	–	dBm
Maximum received signal @0.1% BER		–	0	–	dBm
Co–channel C/I		–	11	–	dB
Adjacent channel selectivity C/I	F = F0 + 1 MHz	–	–7	–	dB
	F = F0 – 1 MHz	–	–7	–	dB
	F = F0 + 2 MHz	–	–25	–	dB
	F = F0 – 2 MHz	–	–35	–	dB
	F = F0 + 3 MHz	–	–25	–	dB
	F = F0 – 3 MHz	–	–45	–	dB
		8DPSK			
Sensitivity @0.1% BER		–	–84	–	dBm
Maximum received signal @0.1% BER		–	–5	–	dBm
C/I c–channel		–	18	–	dB
Adjacent channel selectivity C/I	F = F0 + 1 MHz	–	2	–	dB
	F = F0 – 1 MHz	–	2	–	dB
	F = F0 + 2 MHz	–	–25	–	dB
	F = F0 – 2 MHz	–	–25	–	dB
	F = F0 + 3 MHz	–	–25	–	dB
	F = F0 – 3 MHz	–	–38	–	dB

13.2.3 Receiver – Bluetooth LE

Table 11 – Receiver (BLE) specifications

Parameter		Min	Typ.	Max	Unit
Sensitivity @30.8% PER		–	–97	–	dBm
Maximum received signal @30.8% PER		0	–	–	dBm
Co–channel C/I		–	+10	–	dB
Adjacent channel selectivity C/I	F = F0 + 1MHz	–	–5	–	dB
	F = F0 – 1MHz	–	–5	–	dB
	F = F0 + 2MHz	–	–25	–	dB
	F = F0 – 2MHz	–	–35	–	dB
	F = F0 + 3MHz	–	–35	–	dB
	F = F0 – 3MHz	–	–45	–	dB
Out–of–band blocking performance	30MHz ~ 2000MHz	–10	–	–	dB
	2000MHz ~ 2400MHz	–27	–	–	dBm
	2500MHz ~ 3000MHz	–27	–	–	dBm
	3000MHz ~ 12.5GHZ	–10	–	–	dBm
Intermodulation		–36	–	–	dBm

13.2.4 Transmitter – Basic Data Rate

Table 12 – Transmitter (basic data rate) specifications

Parameter		Min	Typ.	Max	Unit
RF transmit power		–	2.11	–	dBm
RF power control range		0.21	2.11	3.29	dBm
+20 dB bandwidth		–	0.9	–	MHz
Adjacent channel transmit power	F = F0 + 1 MHz	–	–24	–	dBm
	F = F0 – 1 MHz	–	–16.1	–	dBm
	F = F0 + 2 MHz	–	–40.8	–	dBm
	F = F0 – 2 MHz	–	–35.6	–	dBm
	F = F0 + 3 MHz	–	–45.7	–	dBm
	F = F0 – 3 MHz	–	–40.2	–	dBm
	F = F0 + >3 MHz	–	45.6	–	dBm
	F = F0 – >3 MHz	–	44.6	–	dBm
$\Delta f1_{avg}$		–	–	155	KHz
$\Delta f2_{max}$		133.7			KHz
$\Delta f2_{avg}/\Delta f1_{avg}$		–	0.92	–	–
ICFT		–	–7	–	KHz
Drift rate		–	0.7	–	KHz/50µs
Drift (1 slot packet)		–	6	–	KHz
Drift (5 slot packet)		–	6	–	KHz

13.2.5 Transmitter – Enhanced Data Rate

Table 13 – Transmitter (enhanced data rate) specifications

Parameter		Min	Typ.	Max	Unit
RF transmit power		–	4.44	–	dBm
RF power control range		2.31	–	5.93	dBm
π/4 DQPSK max w0		–	−0.72	–	KHz
π/4 DQPSK max wi		–	−6	–	KHz
π/4 DQPSK max |wi + w0|		–	−7.42	–	KHz
8DPSK max w0		–	0.7	–	KHz
8DPSK max wi		–	−9.6	–	KHz
8DPSK max |wi + w0|			−10		KHz
π/4 DQPSK modulation accuracy	RMS DEVM	–	4.28	–	%
	99% DEVM	–	–	30	%
	Peak DEVM	–	13.3	–	%
8 DPSK modulation accuracy	RMS DEVM	–	5.8	–	%
	99% DEVM	–		20	%
	Peak DEVM	–	14	–	%
In−band spurious emissions	F = F0 + 1MHz	–	−34	–	dBm
	F = F0 − 1MHz	–	−40.2	–	dBm
	F = F0 + 2MHz	–	−34	–	dBm
	F = F0 − 2MHz	–	−36	–	dBm
	F = F0 + 3MHz	–	−38	–	dBm
	F = F0 − 3MHz	–	−40.3	–	dBm
	F = F0 ± >3MHz	–	–	−41.5	dBm
EDR differential phase coding		–	100	–	%

13.2.6 Transmitter – Bluetooth LE

Table 14 – Transmitter (BLE) specifications

Parameter		Min	Typ.	Max	Unit
RF transmit power		–	4.06	–	dBm
RF power control range		3.39	–	4.31	dBm
Adjacent channel transmit power	F = F0 + 1MHz	–	–14.6	–	dBm
	F = F0 – 1MHz	–	–12.7	–	dBm
	F = F0 + 2MHz	–	–44.3	–	dBm
	F = F0 – 2MHz	–	–38.7	–	dBm
	F = F0 + 3MHz	–	–49.2	–	dBm
	F = F0 – 3MHz	–	–44.7	–	dBm
	F = F0 + >3MHz	–	–50	–	dBm
	F = F0 – >3MHz	–	–50	–	dBm
$\Delta f1_{avg}$		–	–	265	KHz
$\Delta f2_{max}$		247	–	–	KHz
$\Delta f2_{avg}/\Delta f1_{avg}$		–	–0.92	–	–
ICFT		–	–10	–	KHz
Drift rate		–	0.7	–	KHz/50µs
Drift		–	2	–	KHz

14.0 LoRa

14.1 Supported features

Table 15 – Supported LoRa features

Part Number	Frequency Range	LoRa Parameters			
		Spreading factor	Bandwidth	Effective Bitrate	Sensitivity
Semtech SX1272	902.3-914.9MHz	12	125 /250KHz	0.24 – 37.5 kpbs	–117 to –137 dBm
	903-914.2 MHz	12	500 kHz		

The current micropython firmware supports LoRaWAN 1.0 acting as either a Class A or Class C node.

14.2 Specifications

Table 16 – LoRa modem performance

Bandwidth (KHz)	Spreading Factor	Nominal Rb (bps)	Sensitivity (dBm)
125	12	293	–137
250	12	588	–134
500	12	1172	–131

14.2 Specifications

Table 17 – LoRa electrical characteristics

Symbol	Description	Conditions	Min	Typ.	Max	Unit
IDDR_L	Supply current in receiver LoRa mode	LNABoost Off, BW=125KHz	–	9.7	–	mA
		LNABoost Off, BW=250KHz	–	10.5	–	mA
		LNABoost Off, BW=500KHz	–	12	–	mA
		LNABoost On, BW=125KHz	–	10.8	–	mA
		LNABoost On, BW=250KHz	–	11.6	–	mA
		LNABoost On, BW=500KHz	–	13	–	mA
IDDT_L	Supply current in transmitter mode	RFOP = 13dBm	–	28	–	mA
		RFOP = 7dBm	–	18	–	mA
IDDT_H_L	Supply current in transmitter mode with an external impedance transformer	Using PA_BOOST pin RFOP = 17 dBm	–	90	–	mA
BI_L	Blocking Immunity, FRF=903MHz CW interferer	Offset = ±1 MHz	–	82.5	–	dB
		Offset = ±2 MHz	–	86.5	–	dB
		Offset = ±10 MHz	–	89	–	dB
IIP3_L	3rd order input intercept point, highest LNA gain, FRF=903MHz, CW interferer	F1 = FRF + 1MHz F2 = FRF + 1.995MHz	–	–12.5	–	dBm
IIP2_L	2nd order input intercept point, highest LNA gain, FRF=903MHz, CW interferer	F1 = FRF + 20MHz F2 = FRF + 20MHz + Δf	–	57	–	dBm
BR_L	Bit rate, Long–Range Mode	From SF12, CR=4/5, BW=500 kHz to SF12, CR=4/8, BW = 125kHz	0.24	–	37.5	kbps

14.2 Specifications

Table 17 – LoRa electrical characteristics

Symbol	Description	Conditions	Min	Typ.	Max	Unit
RFS_L125	RF sensitivity, Long–Range Mode, highest LNA gain, LNA boost, 125kHz bandwidth using split Rx/Tx path	SF = 12	–	–137	–	dBm
RFS_L250	RF sensitivity, Long–Range Mode, highest LNA gain, LNA boost, 250kHz bandwidth using split Rx/Tx path	SF = 12	–	–135	–	dBm
RFS_L500	RF sensitivity, Long–Range Mode, highest LNA gain, LNA boost, 500kHz bandwidth using split Rx/Tx path	SF = 12	–	–129	–	dBm

14.2 Specifications

Table 17 – LoRa electrical characteristics

Symbol	Description	Conditions	Min	Typ.	Max	Unit
CCR_LCW		SF = 12	–	19.5	–	dB
CCR_LL	Co–channel rejection	Interferer is a LoRa signal using the same BW and SF. Pw = sensitivity + 3dB	–	–6	–	dB
ACR_LCW	Adjacent channel rejection FRF = 903 MHz	Interferer is 1.5*BW_L from the wanted signal centre frequency 1% PER, Single CW tone = Sensitivity + 3dB				
		SF = 12	–	72	–	dB
IMR_LCW	Image rejection after calibration	1% PER, Single CW tone = sensitivity + 3dB	–	66	–	dB
FERR_L	Maximum tolerated frequency offset between transmitter and receiver, no sensitivity degradation	BW_L = 125kHz	–30	–	30	kHz
		BW_L = 250kHz	–60	–	60	kHz
		BW_L = 500kHz	–120	–	120	kHz

14.2 Specifications

Table 18 – LoRa power consumption

Symbol	Description	Conditions	Min	Typ.	Max	Unit
IDDSL	Supply current in sleep mode		–	0.1	1	µA
IDDIDLE	Supply current in idle mode	RC oscillator enabled	–	1.5	–	µA
IDDST	Supply current in standby mode	Crystal oscillator enabled	–	1.4	1.6	mA
IDDFS	Supply current in synthesizer mode	FSRx	–	4.5	–	mA
IDDR	Supply current in receive mode	LnaBoost Off	–	10.5	–	mA
		LnaBoost On	–	11.2	–	mA
IDDT	Supply current in transmit mode with impedance matching	RFOP=+ 20 dBm on PA_BOOST	–	125	–	mA
		RFOP=+ 17 dBm on PA_BOOST	–	90	–	mA
		RFOP=+ 13 dBm on RFO pin	–	28	–	mA
		RFOP=+ 7 dBm on RFO pin	–	18	–	mA

15.0 Sigfox

15.1 Frequencies

Table 19 – Supported sigfox regions

Region	Uplink Frequency (MHz)	Downlink Frequency (MHz)
RCZ2 (US)	902.216	904.666

15.2 Specifications

Table 20 – Sigfox modem performance

Parameter		Min	Typ.	Max	Unit
Data Rate	RCZ2	–	600	–	bps
TX Power	RCZ2	–	+20	–	dBm
RX Sensitivity		–	–126	–	dBm
Current Draw	RCZ2 TX	–	125	–	mA
	RCZ2 RX	–	11.2	–	mA

16.0 LTE CAT–M1

16.1 Supported features

– 3GPP release 13 LTE Advanced Pro
– Supports narrowband LTE UE categories M1 – Integrated baseband, RF, RAM memory and power management
– Reduced TX power class option
– Extended DRX (eDRX) and PSM features for long sleep duration use cases

16.2 Specifications

Table 21 – Supported LTE modes

Parameter		Min	Typ.	Max	Unit
Data rate	LTE Cat M1 in 1.4 Mhz, HD–FDD – DL	–	300	–	kbps
	LTE Cat M1 in 1.4 Mhz, HD–FDD – UP	–	375	–	kbps

16.2.1 Supported LTE bands

Table 22 – Supported LTE bands

Bands	TX Frequencies	RX Frequencies
Band 4	1710-1755MHz	2110 to 2155 MHz
Band 12	699-716MHz	729 to 746 MHz
Band 13	777-787MHz	746-756 MHz

16.3 SIM Card requirements

Table 23 – SIM card specifications

Parameter	Min.	Typ.	Max	Unit
Form factor	–	Nano–SIM	–	–
Variant	–	USIM	–	–
Supply Voltage	–	1.8	–	v

16.4 Certified carriers

Table 24 –Certified carriers

Carrier	Country	Network
Verizon US	United States	LTE CAT–M1

17.0 6LoWPAN

Pycom is currently working on adding 6LoWPAN support to this module and plan to release a new firmware with this functionality in Q2 2018.

18.0 Electrical Characteristics

18.1 Absolute maximum ratings

Table 25 – Absolute maximum ratings

Parameter	Symbol	Min	Typ.	Max	Unit
Supply Input Voltage	V_{IN}	3.5	–	5.5	V
Supply Output Current	I_{OUT}	–	–	1.2	A
Supply Output Voltage	V_{3V3}	–	3.3	–	V
Storage Temperature	T_{STR}	–	–	–	°C
Operating Temperature	T_{OPR}	−40	–	85	°C
Moisture Sensitivity Level	MSL	–	1	–	–

18.2 Input/Output characteristics

Table 26 – Input/Output characteristics

Parameter	Symbol	Min	Typ.	Max	Unit
Input low voltage	V_{IL}	−0.3	–	$0.25 \times V_{3V3}$	V
Input high voltage	V_{IH}	$0.75 \times V_{3V3}$	–	$V_{3V3}+0.3$	V
Max Input sink current	I_{SINK}	–	6	12	mA
Input leakage current	I_{IL}	–	–	50	nA
Input pin capacitance	C_{pin}	–	–	2	pF
Output low voltage	V_{OL}	$0.1 \times V_{3V3}$	–	–	V
Output high voltage	V_{OH}	$0.8 \times V_{3V3}$	–	–	V
Max Output source current	I_{SOURCE}	–	6	12	mA

19.0 Minimum Recommended Circuit

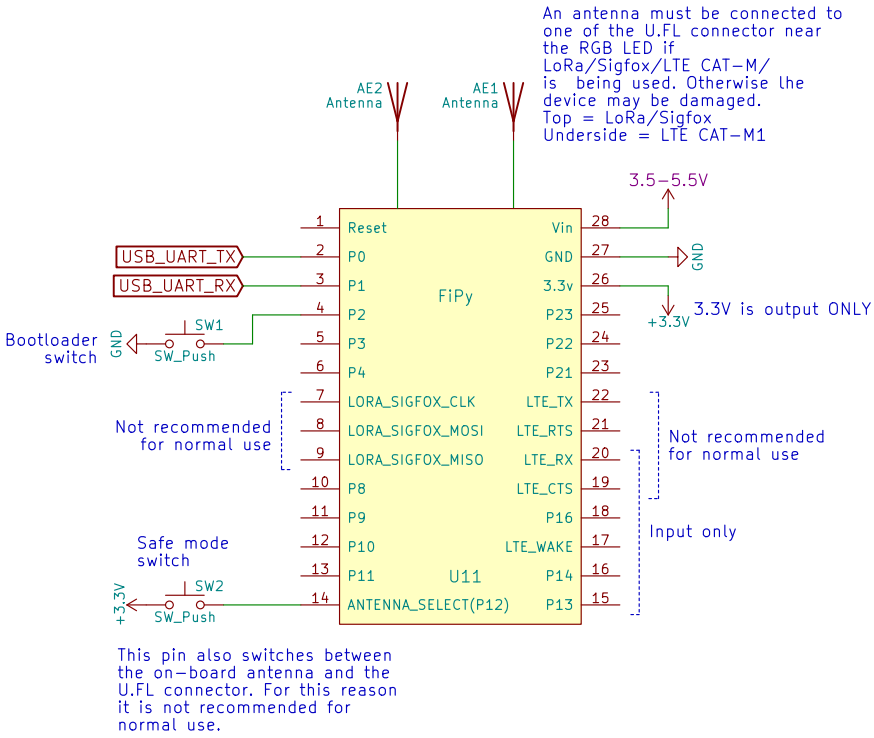

Figure 3 – Minimum required circuit

20.0 Mechanical Specifications

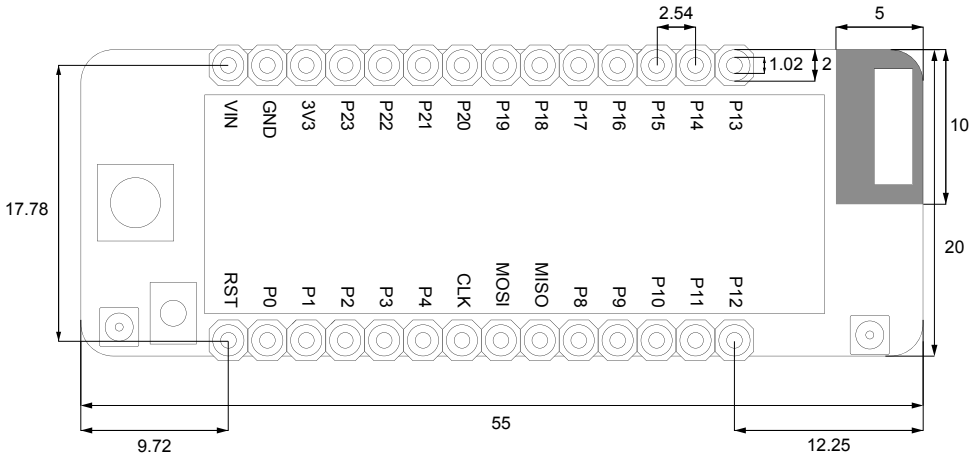

Figure 4 – Mechanical drawing (top down view) – Units: mm

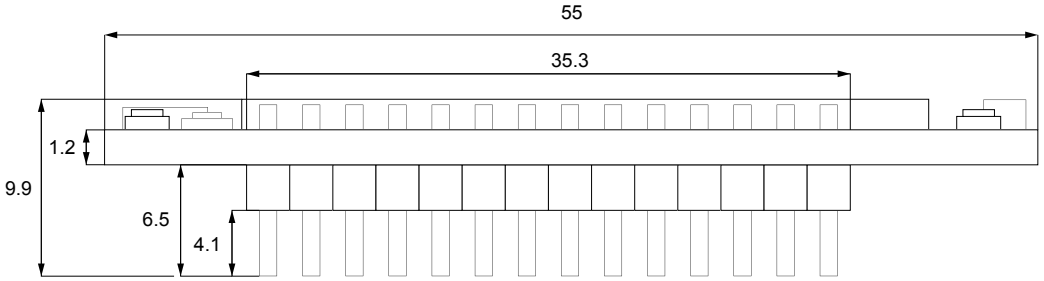

Figure 5 – Mechanical drawing (side view) – Units: mm

21.0 Recommended Land Pattern

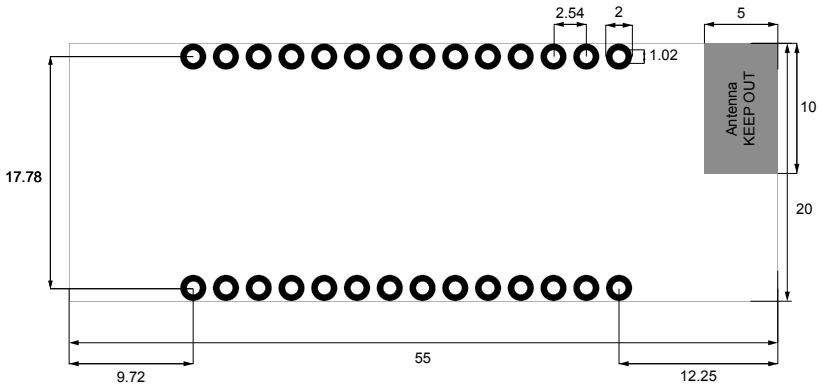

Figure 6 – Recommended land pattern (through hole) – Units: mm

22.0 Soldering Profile

This device is not recommended for reflow soldering. The plastic of the pin headers will melt, instead please hand solder the module or use sockets.

23.0 Ordering Information

Table 27 – Ordering information

Product EAN	Description
0700461341604	FiPy 1.0
0700461341697	IP67 Antenna Pigtail

Bundle	Contents
FiPy Multi–Pack	1x FiPy 1x Expansion Board or Pysense or Pytrack

For more product accessories like expansion board or cases visit our website: http://www.pycom.io

24.0 Packaging

Figure 7 – Mechanical drawing of packaging – Units: mm

The module will come inside a reusable anti–static bag. If the module has headers it will also be inserted into anti–static foam. Total weight inc. packaging: 33g

Federal Communication Commission Interference Statement

This device complies with Part 15 of the FCC Rules. Operation is subject to the following two conditions:
(1) This device may not cause harmful interference.
(2) This device must accept any interference received, including interference that may cause undesired operation.
CAUTION: Changes or modifications not expressly approved by the party responsible for compliance could void the user's authority to operate the equipment.
NOTE: This equipment has been tested and found to comply with the limits for a Class B digital device, pursuant to Part 15 of the FCC Rules. These limits are designed to provide reasonable protection against harmful interferece in a residential installation. This equipment generates uses and can radiate radio frequency energy and, if not installed and used in accordance with the instructions, may cause harmful interference to radio communications.However, there is no guarantee that interference will not occur in a particular installation. If this equipment does cause harmful interference to radio or television reception, which can be determined by turning the equipment off and on, the user is encouraged to try to correct the interference by one or more of the following me asures:
- Reorient or relocat e the receiving antenna.
- Increase the separation between the equipment and receiver.
- Connect the equipment into an outlet on a circuit different from that to which the receiver is connected.
- Consult the dealer or an experienced radio/TV technician for help.

RF Warning Statement

This equipment complies with FCC radiation exposure limits set forth for an uncontrolled environment .
This equipment should be installed and operated with minimum distance 20cm between the radiator& your body.

This device is intended only for OEM integrators under the following conditions:

1) The antenna must be installed such that 20 cm is maintained between the antenna and users, and
2) The transmitter module may not be co-located with any other transmitter or antenna.
As long as two conditions above are met, further transmitter test will not be required. However, the OEM integrator is still responsible for testing their end-product for any additional compliance requirements required with this module installed. To ensure compliance with all non-transmitter functions the host manufacturer is responsible for ensuring compliance with the module(s) installed and fully operational. For example, if a host was previously authorized as an unintentional radiator under the Declaration of Conformity procedure without a transmitter certified module and a module is added, the host manufacturer is responsible for ensuring that the after the module is installed and operational the host continues to be compliant with the Part 15B unintentional radiator requirements. The module is limited to OEM installation ONLY.
The module is limited to installation in mobile or fixed application. We hereby acknowledge our responsibility to provide guidance to the host manufacturer in the event that they require assistance for ensuring compliance with the Part 15 Subpart B requirements.
IMPORTANT NOTE: In the event that these conditions cannot be met (for example certain laptop configurations or co-location with another transmitter), then the FCC authorization is no longer considered valid and the FCC ID cannot be used on the final product. In these circumstances, the OEM integrator will be responsible for reevaluating the end product(including the transmitter) and obtaining a separate FCC authorization.

End Product Labeling

The outside of final products that contains this module device must display a label referring to the enclosed module. This exterior label can use wording such as: "Contains Transmitter Module FCC ID:2AJMTFIPY01R/IC:22263-FIPY01R or "Contains FCC ID:2AJMTFIPY01R/IC:22263-FIPY01R , Any similar wording that expresses the same meaning may be used.

Manual Information to the End User

The OEM integrator has to be aware not to provide information to the end user regarding how to install or remove this RF module in the user's manual of the end product which integrates this module. In the user manual of the end product, the end user has to be informed that the equipment complies with FCC radio-frequency exposure guidelines set forth for an uncontrolled environment.
The end user has to also be informed that any changes or modifications not expressly approved by the manufacturer could void the user's authority to operate this equipment.
The end user manual shall include all required regulatory information/warning as show in this manual.

ISED RSS Warning/ISED RF Exposure Statement:

ISED RSS Warning:
This device complies with Innovation, Science and Economic Development Canada licence-exempt RSS standard(s). Operation is subject to the following two conditions: (1) this device may not cause interference, and (2) this device must accept any interference, including interference that may cause undesired operation of the device.
Le présent appareil est conforme aux CNR d'ISED applicables aux appareils radio exempts de licence. L'exploitation est autorisée aux deux conditions suivantes:
(1) l'appareil ne doit pas produire de brouillage, et
(2) l'utilisateur de l'appareil doit accepter tout brouillage radioélectrique subi, même si le brouillage est susceptible d'en compromettre le fonctionnement.
ISED RF exposure statement:
This equipment complies with ISED radiation exposure limits set forth for an uncontrolled environment. This equipment should be installed and operated with minimum distance 20cm between the radiator& your body.This transmitter must not be co-located or operating in conjunction with any other antenna or transmitter.
Le rayonnement de la classe b repecte ISED fixaient un environnement non contrôlés.Installation et mise en œuvre de ce matériel devrait avec échangeur distance minimale entre 20 cm ton corps.Lanceurs ou ne peuvent pas coexister cette antenne ou capteurs avec d'autres.

Single Modular Approval. Output power is conducted. This device is to be used in mobile or fixed applications only. Antenna gain including cable loss must not exceed 7 dBi @ FDD (Band 4), 9.81 @ FDD (Band 12) and 10.57 @ FDD (Band 13) for the purpose of satisfying the requirements of CFR 47 2.1043 & 2.1091. The antenna(s) used for this transmitter must be installed to provide a separation distance of at least 20 cm from all persons and must not be co-located or operated in conjunction with any antenna or transmitter, except in accordance with FCC multi-transmitter evaluation procedure. Compliance of this device in all final product configurations is the responsibility of the Grantee. Installation of this device into specific final products may require the submission of a Class II permissive change application containing data pertinent to RF Exposure, spurious emissions, ERP/EIRP, and host/module authentication, or new application if appropriate.
For IC , to meet RF exposure & ERP/ERIP, the maximum net gain of antennas allowed are 5.96 dBi @ FDD (Band 4), 6.64 @ FDD (Band 12) and 7.46 @ FDD (Band 13). The antenna(s) used for this transmitter must be installed to provide a separation distance of at least 20 cm from all persons and must not be co-located or operating in conjunction with any other antenna or transmitter.