GO1

Datasheet

Version 1.0

pycom
GO INVENT

1.0 Overview 03

2.0 Features 03

3.0 Specifications 04

3.1 CPU 04
3.2 Memory 04
3.3 WiFi 04
3.4 Bluetooth 04
3.5 LTE CAT–M1 04
3.6 RTC 04
3.7 Security 04
3.8 Hash / encryption 04

4.0 Block Diagram 04

5.0 Pinout 05

6.0 Pin Details 06

6.1 Remapping Pins 08

7.0 ESP32 Peripherals 09

7.1 RTC 09

8.0 Programming the device 10

8.1 UART 10
8.2 Wi–Fi 10
8.2.1 Telnet 10
8.2.2 FTP 10

9.0 Boot modes 10

9.1 Bootloader mode 10
9.2 Safe boot 10

10.0 Power 11

10.1 Current consumption by power modes/features running at 3.7V 11

11.0 Memory Map 12

11.1 Flash 12
11.2 RAM 12
11.3 ROM and eFuses 12

12.0 WiFi 13

12.1 Supported features 13
12.2 Specifications 13

13.0 Bluetooth 14

13.1 Supported features 14
13.2 Specification 14
13.2.1 Receiver – Basic Data Rate 14
13.2.2 Receiver – Enhanced Data Rate 15
13.2.3 Receiver – Bluetooth LE 16
13.2.4 Transmitter – Basic Data Rate 17
13.2.5 Transmitter – Enhanced Data Rate 18
13.2.6 Transmitter – Bluetooth LE 19

14.0 LTE CAT–M1 20

14.1 Supported features 20
14.2 Specifications 20
14.2.1 Supported LTE bands 20
14.3 SIM Card requirements 20
14.4 Certified carriers 20

15.0 Electrical Characteristics 21

15.1 Absolute maximum ratings 21
15.2 Input/Output characteristics 21

16.0 Minimum Recommended Circuit 22

17.0 Mechanical Specifications 23

18.0 Recommended Land Patterns 23

19.0 Design Considerations 24

19.1 Antenna Impedance 24
19.2 Deep sleep power 24
19.3 Reference layout 25

20.0 Soldering Profile 26

21.0 Ordering Information 27

22.0 Packaging 27

22.1 Reel 27
22.2 Tape 27
22.3 Box 27

23.0 Certification 28

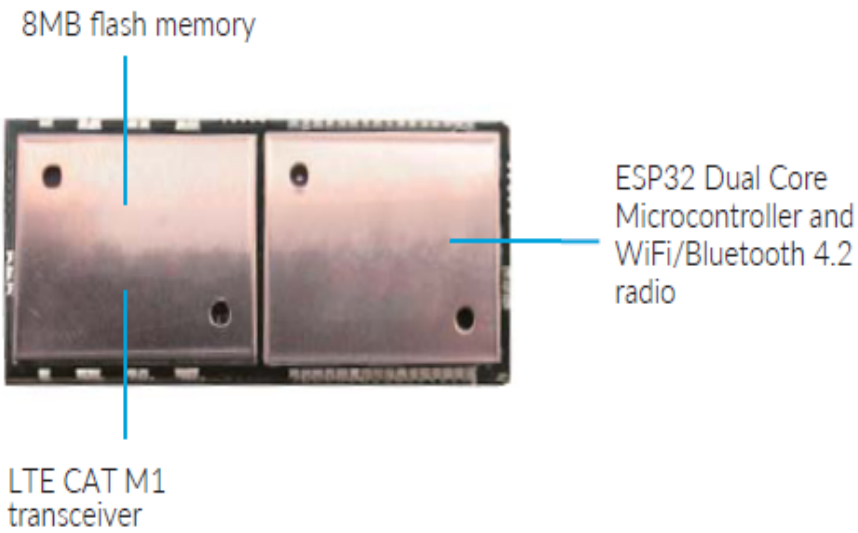

1.0 Overview

With WiFi, BLE and cellular LTE–CAT M1, the G01 OEM Module is the latest Pycom triple–bearer MicroPython enabled micro controller on the market today – the perfect enterprise grade platform for your connected things. Create and connect your things everywhere, fast.

2.0 Features

- Powerful CPU, BLE and state of the art WiFi radio. 1KM Wifi Range
- MicroPython enabled
- Can be directly surface mount inside your product like a regular component
- Ultra–low power usage: a fraction compared to other connected micro controllers

3.0 Specifications

3.1 CPU

- Xtensa® dual–core 32–bit LX6 microprocessor(s), up to 600 DMIPS
- Hardware floating point acceleration
- Python multi–threading
- An extra ULP–coprocessor that can monitor GPIOs, the ADC channels and control most of the internal peripherals during deep–sleep mode while only consuming 25uA.

3.2 Memory

- RAM: 520KB + 4MB
- External flash: 8MB

3.3 WiFi

- 802.11b/g/n 16mbps

3.4 Bluetooth

- Low energy and classic

3.5 LTE CAT–M1

- One single chip for CAT M1
- 3GPP release 13 LTE Advanced Pro
- Supports narrowband LTE UE categories M1
- Integrated baseband, RF, RAM memory and power management
- Reduced TX power class option
- Peak power estimations:
  TX current = 420mA peak @1.5Watt
  RX current = 330mA peak @1.2Watt
- Extended DRX (eDRX) and PSM features for long sleep duration use cases

3.6 RTC

- Running at 150kHz

3.7 Security

- SSL/TLS support
- WPA Enterprise security

3.8 Hash / encryption

- SHA
- MD5
- DES
- AES

4.0 Block Diagram

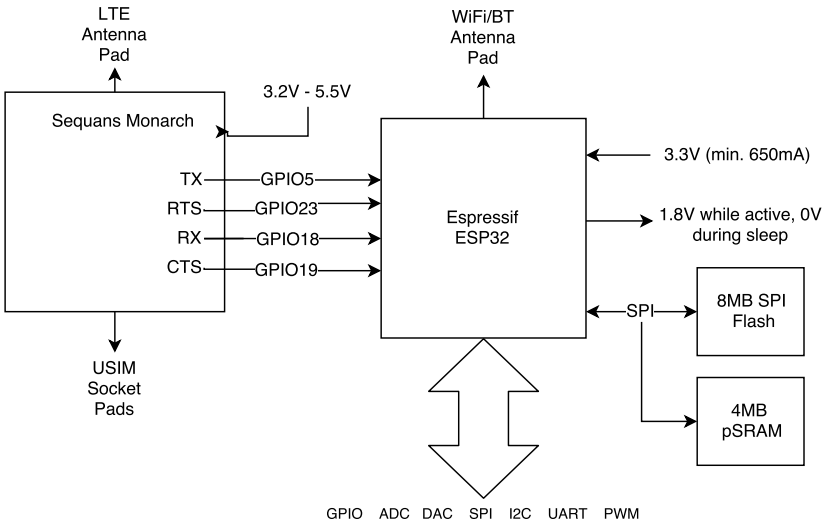

Figure 1 – System block diagram

5.0 Pinout

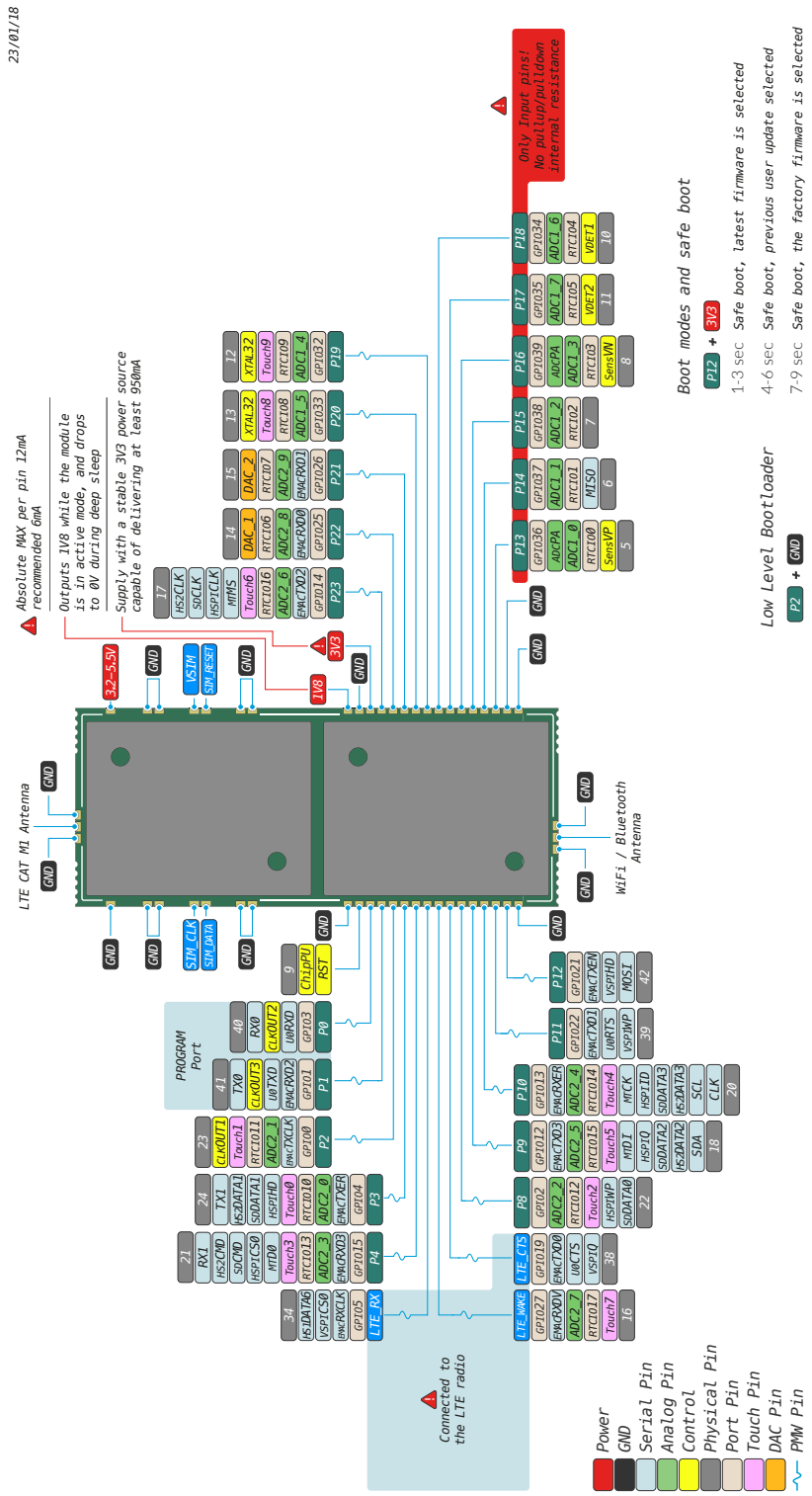

Figure 2 – Module pinout diagram

Note: The ESP32 supports remapping its peripherals to alternative pins. See below for a detailed list.

6.0 Pin Details

Table 1 – Module pinout

Module Pin	ESP32 GPIO	Pin Name	Default Function	ADC	PWM	RTC†	Notes
1	–	–	Ground				
2	–	–	Ground				
3	–	–	Ground				
4	–	–	USIM Clock				
5	–	–	USIM I/O				
6	–	–	Ground				
7	–	–	Ground				
8	–	–	Ground				
9	–	–	Reset				Active Low
10	3	P0	RX0 (Programming)		•		Used by the bootloader and to program the module
11	1	P1	TX0 (Programming)		•		Used by the bootloader and to program the module
12	0	P2		2*	•	•	If tied to GND during boot the device will enter bootloader mode
13	4	P3	TX1	2*	•	•	
14	15	P4	RX1	2*	•	•	JTAG TDO, SD card CMD
15	5	–	Sequans modem RX		•		Not recommended for external use
16	27	–	Sequans modem Interrupt	2*	•	•	Not recommended for external use
17	19	–	Sequans modem CTS		•		Not recommended for external use
18	2	P8		2*	•	•	SD card DAT0
19	12	P9	SDA	2*	•	•	JTAG TDI

6.0 Pin Details

Table 1 – Module pinout

Module Pin	ESP32 GPIO	Pin Name	Default Function	ADC	PWM	RTC†	Notes
20	13	P10	SCL (I2C) / CLK (SPI)	2*	•	•	JTAG TCK
21	22	P11	MOSI		•		
22	21	P12			•		If tied to 3.3V during boot the device enters safe boot mode, JTAG MISO
23	–	–	Ground				
24	–	–	Ground				
25	–	–	WiFi/BT antenna				50 Ohm impedance required
26	–	–	Ground				
27	–	–	Ground				
28	–	–	Ground				
29	36	P13		1		•	Input only
30	37	P14		1		•	Input only
31	38	P15		1		•	Input only
32	39	P16		1		•	Input only
33	35	P17		1		•	Input only
34	34	P18		1		•	Input only
35	32	P19		1	•	•	
36	33	P20		1	•	•	Connected to the on–board RGB LED
37	26	P21		2*	•	•	DAC
38	25	P22		2*	•	•	DAC
39	14	P23		2*	•	•	JTAG TMS, SD card SCLK

6.0 Pin Details

Table 1 – Module pinout

Module Pin	ESP32 GPIO	Pin Name	Default Function	ADC	PWM	RTC†	Notes
40	–	–	3.3V input				This supply should be able to source 650mA
41	–	–	Ground				
42	–	–	1.8V Output				Only when the device is active, during deep sleep this drops to 0V
43	–	–	Ground				
44	–	–	Ground				
49	–	–	3.2–5.5V input				Powers the Sequans cellular modem
50	–	–	Ground				
51	–	–	LTE CAT–M1 antenna				50 Ohm impedance required
52	–	–	Ground				
–	23	–	Sequans modem TX				
–	18	–	Sequans modem RTS				

† The pins on the RTC power domain can be used during deep sleep, specifically GPIO pins will maintain their state while in deep sleep.

* ADC2 is currently not supported in the micropython firmware

6.1 Remapping Pins

The ESP32 features comprehensive pin remapping functionality. This allows peripherals to be mapped onto almost any available GPIO pins. The above table merely shows the default assignments. For example, the default mapping has the SPI and I2C clocks overlapping, meaning both cannot be used simultaneously without remapping one to a different pin. For a detailed guide of what peripheral can be assigned to what pins please read “Appendix A – ESP32 Pin Lists” of the ESP32 datasheet.

7.0 ESP32 Peripherals

Table 2 – Peripherals

Peripheral	Count	Pins
UART	3	Remappable to any GPIO. Note: P13–18 can only be mapped to RX or CTS since they are input only.
I2C	2	Remappable to any GPIO except P13–18 since they are input only and I2C is bi–directional.
SPI	3	Remappable to any GPIO. Note: P13–18 can only be mapped to MISO since they are input only.
CAN*	1	Remappable to any GPIO. Note: P13–18 can only be mapped to RX since they are input only.
JTAG	1	TDO = P4, TDI = P9, TCK = P10, TMS = P24
PWM	1	All GPIO except P13–18 which are input only
ADC	18	Fixed mapping, see Table 1, Only ADC 1 is supported in our micropython firmware.
DAC	2	Only available on P21 and P22
SD	1	DAT0 = P8, SCLK = P23, CMD = P4

* Requires an external CAN bus transceiver, we recommend the SN65HVD230 from Texas Instruments.

For a more detailed description of the ESP32 peripherals along with peripherals not currently supported by our firmware, please check the ESP32 datasheet.

7.1 RTC

Our modules by default all use the internal RC oscillator at 150kHz for the RTC. If you require better accuracy/ stability you can connect a 32.768 kHz crystal (or TCXO) externally on pins P19 and P20 (or P19 for a TXCO)

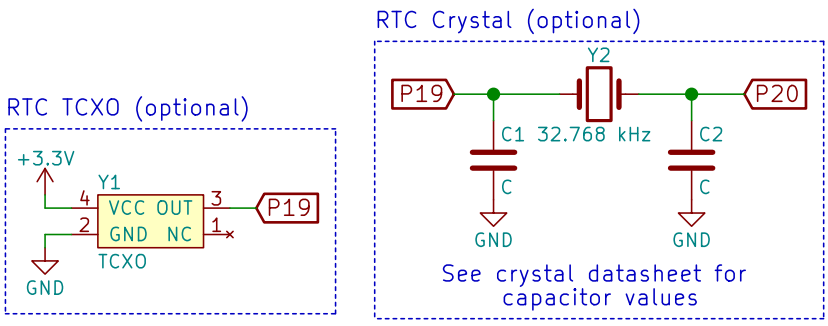

Figure 3 – External RTC crystal circuits

8.0 Programming the device

8.1 UART

By default, the modules run an interactive python REPL on UART0 which is connected to P0 (RX) and P1 (TX) running at 115200 baud. Code can be run via this interactive REPL or you can use our PyMakr plugin for Atom or Visual Studio Code to upload code to the board.

8.2 Wi–Fi

By default, the G01 also acts as a Wi–Fi access point
SSID: gpy–wlan–XXXX
Password: www.pycom.io
Once connected to the G01's Wi–Fi network you can access it in two ways.

8.2.1 Telnet

Running on port 23 is a telnet server. This acts in a very similar way to the UART. It presents you with an interactive REPL and can also be used to upload code via PyMakr.

8.2.2 FTP

The G01 also runs a FTP server that allows you to copy files to and from the device, include an SD card if one is connected. To connect to this FTP server, you need to use plain FTP (un–encrypted) with the following credentials:
User: micro
Password: python

9.0 Boot modes

9.1 Bootloader mode

In order to update the firmware of the G01 device, it needs to be placed into bootloader mode. In order to do this, P2 needs to be connected to ground when the device reboots. Once in bootloader mode you can use the Pycom firmware update tool to update to the latest official firmware. If you are developing your own firmware based on our open–source firmware, a flashing script is provided with the source code.

9.2 Safe boot

The micropython firmware features a safe boot feature that skips the boot.py and main.py scripts and goes straight to the REPL. This is useful if the device is programmed with code that causes the device to crash or become inaccessible. To access this mode, you need to connect P12 to 3.3V and reset the device. Upon entering safe boot mode, the on–board LED will begin to blink orange. Depending on the duration the pin is held at 3.3V, a different firmware will be run.

Table 3 – Boot modes

0–3 Seconds	3–6 Seconds
Current firmware without running boot.py or main.py	Previous firmware if the firmware was uploaded via OTA (without running boot.py and main.py)

10.0 Power

The G01 features an on–board voltage regulator that takes 3.5V – 5.5V from the VIN pin and regulates it to 3.3V. It is important to only use the 3.3V as an output and not try to feed 3.3V into this pin as this could damage the regulator.

10.1 Current consumption by power modes/features running at 3.3V

Table 4 – Power consumption by feature

Mode	Min	Avg.	Max	Units
Idle (no radios)	–	37	–	mA
LTE Transmit	–	173	285	mA
LTE Attached	–	75	–	mA
WiFi AP	–	117	–	mA
WiFi client	–	130	–	mA
Bluetooth	–	113	–	mA
Deep sleep	–	13.5	–	mA

11.0 Memory Map

11.1 Flash

Table 5 – Flash memory map

Name	Description	Start address	Size
NVS	Non–volatile RAM area. Used by the NVS API	0x9000	0x7000
Firmware Slot 0	First firmware slot. Factory firmware is flashed here	0x10000	0x180000
OTA info	Information about the current active firmware	0x190000	0x1000
Firmware Slot 1	Second firmware slot	0x1A0000	0x180000
File system	504KB file system on devices with 4MB flash	0x380000	0x7F000
Config	Config area for LoRa, Sigfox and LTE	0x3FF000	0x1000
File system (2)	4MB file system on devices with 8MB flash	0x400000	0x400000

11.2 RAM

Table 6 – RAM memory map

Name	Description	Size
On–chip SRAM	Internal RAM memory used by the 2 xtensa CPUs	520KB
Fast RTC RAM	Fast RAM area accessible by the xtensa cores during boot and sleep modes	8KB
Slow RTC RAM	Slow RAM area accessible by the Ultra–Low Power Coprocessor during deep sleep	8KB
External pSRAM	External QSPI RAM memory clocked @ 40MHz	4MB

11.3 ROM and eFuses

Table 7 – Miscellaneous memory

Name	Description	Size
On–chip ROM	Contains core functions and boot code.	448KB
eFuse	256 bits are used for the system (MAC address and chip configuration) and the remaining 768 bits are reserved for customer applications, including Flash–Encryption and Chip–ID	1kbit

12.0 WiFi

12.1 Supported features

- 802.11 b/g/n
- 802.11 n (2.4 GHz), up to 150 Mbps
- 802.11 e: QoS for wireless multimedia technology
- WMM–PS, UAPSD
- A–MPDU and A–MSDU aggregation
- Block ACK
- Fragmentation and defragmentation
- Automatic Beacon monitoring/scanning
- 802.11 i security features: pre–authentication and TSN
- Wi–Fi Protected Access (WPA/WPA2/WPA2–Enterprise/Wi–Fi Protected Setup (WPS)
- Infrastructure BSS Station mode/SoftAP mode
- Wi–Fi Direct (P2P), P2P Discovery, P2P Group Owner mode and P2P Power Management

12.2 Specifications

Table 8 – WiFi specifications

Description	Min	Typ.	Max	Unit
Input Frequency	2412	–	2462	MHz
Output power of PA for 11b mode	20.48	21.31	22.13	dBm
Sensitivity				
DSSS, 1Mbps	–	–	98	dBm
CCK, 11 Mbps	–	–	91	dBm
OFDM, 6 Mbps	–	–	93	dBm
OFDM, 54 Mbps	–	–	75	dBm
HT20, MCS0	–	–	93	dBm
HT20, MCS7	–	–	73	dBm
HT40, MCS0	–	–	90	dBm
HT40, MCS7	–	–	70	dBm
MCS32	–	–	89	dBm
Adjacent channel rejection				
OFDM, 6 Mbps	–	37	–	dB
OFDM, 54 Mbps	–	21	–	dB
HT20, MCS0	–	37	–	dB
HT20, MCS7	–	20	–	dB

13.0 Bluetooth

13.1 Supported features

- Compliant with Bluetooth v4.2 BR/EDR and BLE specification
- class–2 transmitter without external power amplifier
- Enhanced power control
- NZIF receiver with –97 dBm sensitivity
- Adaptive Frequency Hopping (AFH)
- Standard HCI based on SDIO/SPI/UART
- High–speed UART HCI, up to 4 Mbps
- BT 4.2 controller and host stack
- Service Discover Protocol (SDP)
- General Access Profile (GAP)
- Security Manage Protocol (SMP)
- ATT/GATT
- HID
- All GATT–based profile supported
- SPP–like GATT–based profile
- BLE Beacon
- A2DP/AVRCP/SPP, HSP/HFP, RFCOMM
- CVSD and SBC for audio codec
- Bluetooth Piconet and Scatternet

13.2 Specification

13.2.1 Receiver – Basic Data Rate

Table 9 – Receiver (basic data rate) specifications

Parameter		Min	Typ.	Max	Unit
Sensitivity @0.1% BER		–	–94	–	dBm
Maximum received signal @0.1% BER		0	–	–	dBm
Co–channel C/I		–	+7	–	dB
Adjacent channel selectivity C/I	F = F0 + 1 MHz	–	–	–6	dB
	F = F0 – 1 MHz	–	–	–6	dB
	F = F0 + 2 MHz	–	–	–25	dB
	F = F0 – 2 MHz	–	–	–33	dB
	F = F0 + 3 MHz	–	–	–25	dB
	F = F0 – 3 MHz	–	–	–45	dB
Out–of–band blocking performance	30Mhz ~ 2000MHz	–10	–	–	dBm
	2000MHz ~ 2400MHz	–27	–	–	dBm
	2500MHz ~ 3000MHz	–27	–	–	dBm
	3000MHz ~ 12.5GHz	–10	–	–	dBm
Intermodulation		–36	–	–	dBm

13.2.2 Receiver – Enhanced Data Rate

Table 10 – Receiver (basic data rate) specifications

Parameter		Min	Typ.	Max	Unit
		π/4 DQPSK			
Sensitivity @0.1% BER		–	–90	–	dBm
Maximum received signal @0.1% BER		–	0	–	dBm
Co–channel C/I		–	11	–	dB
Adjacent channel selectivity C/I	F = F0 + 1 MHz	–	–7	–	dB
	F = F0 – 1 MHz	–	–7	–	dB
	F = F0 + 2 MHz	–	–25	–	dB
	F = F0 – 2 MHz	–	–35	–	dB
	F = F0 + 3 MHz	–	–25	–	dB
	F = F0 – 3 MHz	–	–45	–	dB
		8DPSK			
Sensitivity @0.1% BER		–	–84	–	dBm
Maximum received signal @0.1% BER		–	–5	–	dBm
C/I c–channel		–	18	–	dB
Adjacent channel selectivity C/I	F = F0 + 1 MHz	–	2	–	dB
	F = F0 – 1 MHz	–	2	–	dB
	F = F0 + 2 MHz	–	–25	–	dB
	F = F0 – 2 MHz	–	–25	–	dB
	F = F0 + 3 MHz	–	–25	–	dB
	F = F0 – 3 MHz	–	–38	–	dB

13.2.3 Receiver – Bluetooth LE

Table 11 – Receiver (BLE) specifications

Parameter		Min	Typ.	Max	Unit
Sensitivity @30.8% PER		–	–97	–	dBm
Maximum received signal @30.8% PER		0	–	–	dBm
Co–channel C/I		–	+10	–	dB
Adjacent channel selectivity C/I	F = F0 + 1MHz	–	–5	–	dB
	F = F0 – 1MHz	–	–5	–	dB
	F = F0 + 2MHz	–	–25	–	dB
	F = F0 – 2MHz	–	–35	–	dB
	F = F0 + 3MHz	–	–35	–	dB
	F = F0 – 3MHz	–	–45	–	dB
Out–of–band blocking performance	30MHz ~ 2000MHz	–10	–	–	dB
	2000MHz ~ 2400MHz	–27	–	–	dBm
	2500MHz ~ 3000MHz	–27	–	–	dBm
	3000MHz ~ 12.5GHZ	–10	–	–	dBm
Intermodulation		–36	–	–	dBm

13.2.4 Transmitter – Basic Data Rate

Table 12 – Transmitter (basic data rate) specifications

Parameter		Min	Typ.	Max	Unit
RF transmit power		-	4	-	dBm
RF power control range		3	–	5	dBm
+20 dB bandwidth		–	0.9	–	MHz
Adjacent channel transmit power	F = F0 + 1 MHz	–	–24	–	dBm
	F = F0 – 1 MHz	–	–16.1	–	dBm
	F = F0 + 2 MHz	–	–40.8	–	dBm
	F = F0 – 2 MHz	–	–35.6	–	dBm
	F = F0 + 3 MHz	–	–45.7	–	dBm
	F = F0 – 3 MHz	–	–40.2	–	dBm
	F = F0 + >3 MHz	–	45.6	–	dBm
	F = F0 – >3 MHz	–	44.6	–	dBm
$\Delta f1_{avg}$		–	–	155	KHz
$\Delta f2_{max}$		133.7			KHz
$\Delta f2_{avg}/\Delta f1_{avg}$		–	0.92	–	–
ICFT		–	–7	–	KHz
Drift rate		–	0.7	–	KHz/50µs
Drift (1 slot packet)		–	6	–	KHz
Drift (5 slot packet)		–	6	–	KHz

13.2.5 Transmitter – Enhanced Data Rate

Table 13 – Transmitter (enhanced data rate) specifications

Parameter		Min	Typ.	Max	Unit
RF transmit power		–	6.5	–	dBm
Gain control step		–	-	–	dBm
RF power control range		5	–	8	dBm
π/4 DQPSK max w0		–	−0.72	–	KHz
π/4 DQPSK max wi		–	−6	–	KHz
π/4 DQPSK max |wi + w0|		–	−7.42	–	KHz
8DPSK max w0		–	0.7	–	KHz
8DPSK max wi		–	−9.6	–	KHz
8DPSK max |wi + w0|			−10		KHz
π/4 DQPSK modulation accuracy	RMS DEVM	–	4.28	–	%
	99% DEVM	–	–	30	%
	Peak DEVM	–	13.3	–	%
8 DPSK modulation accuracy	RMS DEVM	–	5.8	–	%
	99% DEVM	–		20	%
	Peak DEVM	–	14	–	%
In−band spurious emissions	F = F0 + 1MHz	–	−34	–	dBm
	F = F0 − 1MHz	–	−40.2	–	dBm
	F = F0 + 2MHz	–	−34	–	dBm
	F = F0 − 2MHz	–	−36	–	dBm
	F = F0 + 3MHz	–	−38	–	dBm
	F = F0 − 3MHz	–	−40.3	–	dBm
	F = F0 ± >3MHz	–	–	−41.5	dBm
EDR differential phase coding		–	100	–	%

13.2.6 Transmitter – Bluetooth LE

Table 14 – Transmitter (BLE) specifications

Parameter		Min	Typ.	Max	Unit
RF transmit power		–	3.5	–	dBm
Gain control step		–	-	–	dBm
RF power control range		2	–	5	dBm
Adjacent channel transmit power	F = F0 + 1MHz	–	–14.6	–	dBm
	F = F0 – 1MHz	–	–12.7	–	dBm
	F = F0 + 2MHz	–	–44.3	–	dBm
	F = F0 – 2MHz	–	–38.7	–	dBm
	F = F0 + 3MHz	–	–49.2	–	dBm
	F = F0 – 3MHz	–	–44.7	–	dBm
	F = F0 + >3MHz	–	–50	–	dBm
	F = F0 – >3MHz	–	–50	–	dBm
$\Delta f1_{avg}$		–	–	265	KHz
$\Delta f2_{max}$		247	–	–	KHz
$\Delta f2_{avg}/\Delta f1_{avg}$		–	–0.92	–	–
ICFT		–	–10	–	KHz
Drift rate		–	0.7	–	KHz/50µs
Drift		–	2	–	KHz

14.0 LTE CAT–M1

14.1 Supported features

- 3GPP release 13 LTE Advanced Pro
- Supports narrowband LTE UE categories M1
- Integrated baseband, RF, RAM memory and power management
- Reduced TX power class option
- Extended DRX (eDRX) and PSM features for long sleep duration use cases

Table 15 – LTE modem performance

Parameter		Min	Typ.	Max	Unit
Data rate	LTE Cat M1 in 1.4 Mhz, HD–FDD – DL	–	300	–	kbps
	LTE Cat M1 in 1.4 Mhz, HD–FDD – UP	–	375	–	kbps

14.2.1 Supported LTE bands

Table 16 – Supported LTE bands

Bands	TX/RX Frequencies
Low Bands 4, 12, 13	LTE BAND 4:1710-1755MHz(TX);2110-2155(RX) LTE BAND 12:699-716MHz(TX);729-746(RX) LTE BAND 13:777-787MHz(TX);746-756(RX)

14.3 SIM Card requirements

Table 17 – SIM card specificiations

Parameter	Min	Typ.	Max	Unit
Form factor	–	Nano–SIM	–	–
Variant	–	USIM	–	–
Supply Voltage	–	1.8	–	v

14.4 Certified carriers

Table 18 – Certified carriers

Carrier	Country	Network
Verizon US	United States	LTE CAT–M1

15.0 Electrical Characteristics

15.1 Absolute maximum ratings

Table 19 – Absolute maximum ratings

Parameter	Symbol	Min	Typ.	Max	Unit
Supply Input Voltage	V_{IN}	3.5	–	5.5	V
Supply Output Current	I_{OUT}	–	–	1.2	A
Supply Output Voltage	V_{3V3}	–	3.3	–	V
Storage Temperature	T_{STR}	–	–	–	°C
Operating Temperature	T_{OPR}	−40	–	85	°C
Moisture Sensitivity Level	MSL	–	1	–	–

15.2 Input/Output characteristics

Table 20 – Input/Output characteristics

Parameter	Symbol	Min	Typ.	Max	Unit
Input low voltage	V_{IL}	−0.3	–	$0.25 \times V_{3V3}$	V
Input high voltage	V_{IH}	$0.75 \times V_{3V3}$	–	$V_{3V3}+0.3$	V
Max Input sink current	I_{SINK}	–	6	12	mA
Input leakage current	I_{IL}	–	–	50	nA
Input pin capacitance	C_{pin}	–	–	2	pF
Output low voltage	V_{OL}	$0.1 \times V_{3V3}$	–	–	V
Output high voltage	V_{OH}	$0.8 \times V_{3V3}$	–	–	V
Max Output source current	I_{SOURCE}	–	6	12	mA

16.0 Minimum Recommended Circuit

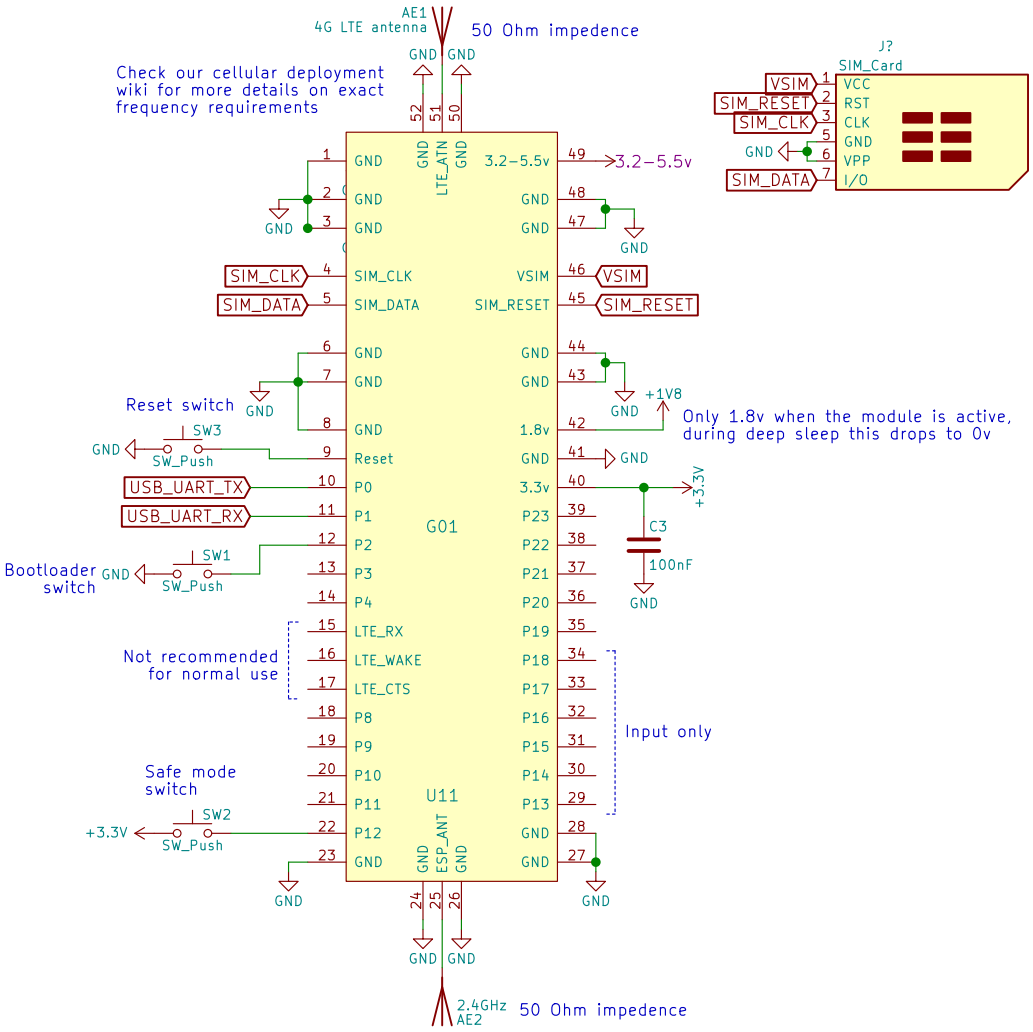

Figure 4 – Minimum required circuit

17.0 Mechanical Specifications

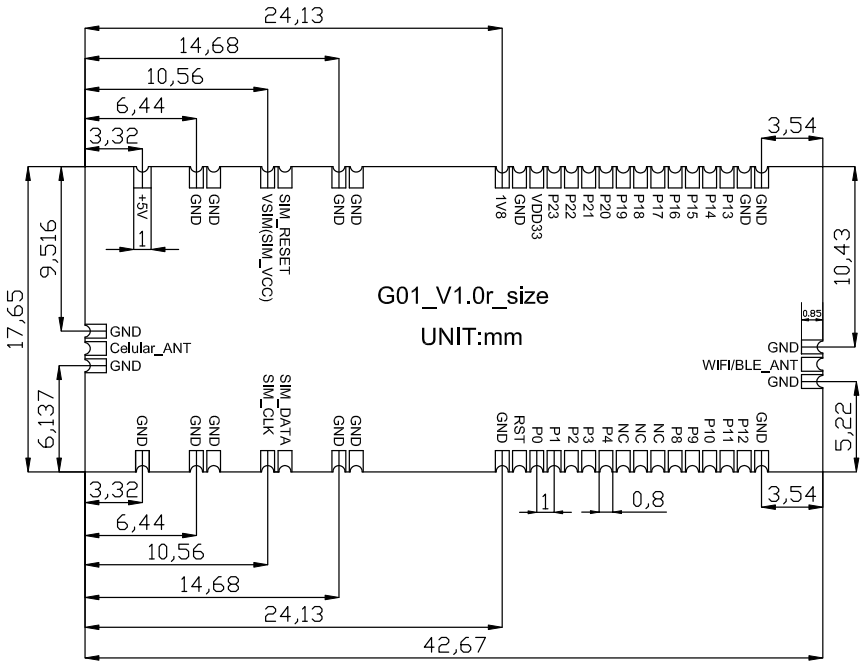

Figure 5 – Mechanical drawing (top down view)

18.0 Recommended Land Patterns

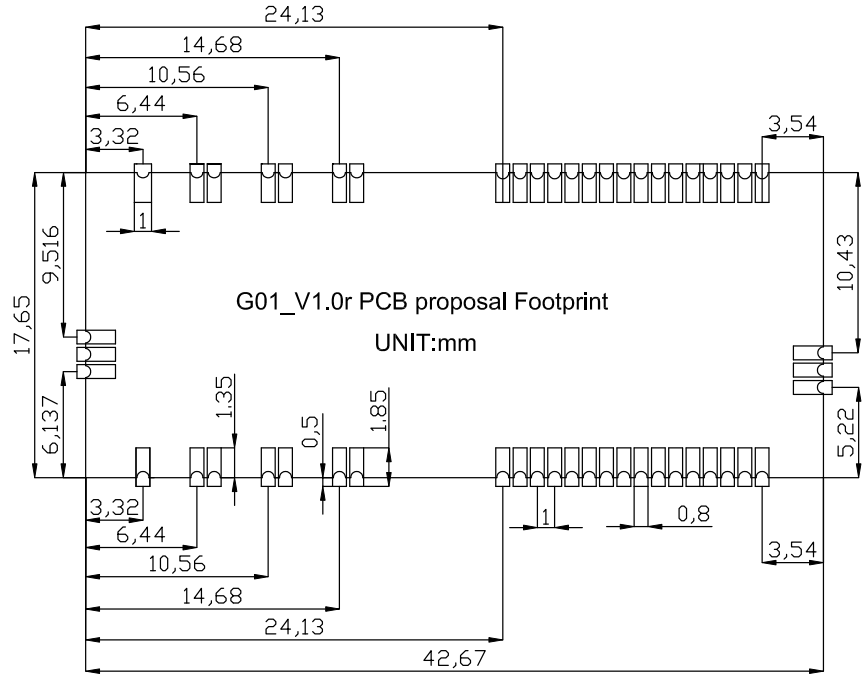

Figure 6 – Recommended land pattern

19.0 Design Considerations

19.1 Antenna Impedance

Our OEM modules are intended to be used with a 50–ohm antenna. They are also required to be connected to the antenna by a 50–ohm grounded co–planar waveguide (as shown in the reference design below with the yellow lines) or a microstrip.

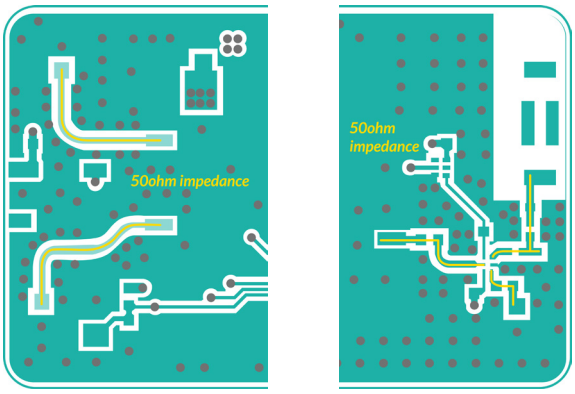

Figure 7 – 50–ohm impedance antenna connections

19.2 Deep sleep power

When selecting a voltage regulator for your application ensure that it has a low power mode, and that this is enabled when the device enters deep sleep. We also recommend cutting off power to all non–essential components such as LEDs, logic gates, sensors etc. when the device is in deep sleep. This can be done using the circuit shown right:

This circuit uses the 1.8V output of the module to cut off supply to non–essential circuitry. The 1.8V output is only active when the module is running, when it goes to deep sleep it drops to 0V. The non–essential circuitry is then powered from the “ACTIVE_POWER” bus

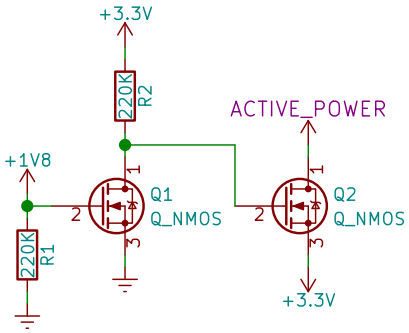

Figure 8 – Power switch for deep sleep mode

19.3 Reference layout

Below you will find the designs for our universal reference board that fits all of our OEM modules. The design files can be downloaded from our website.

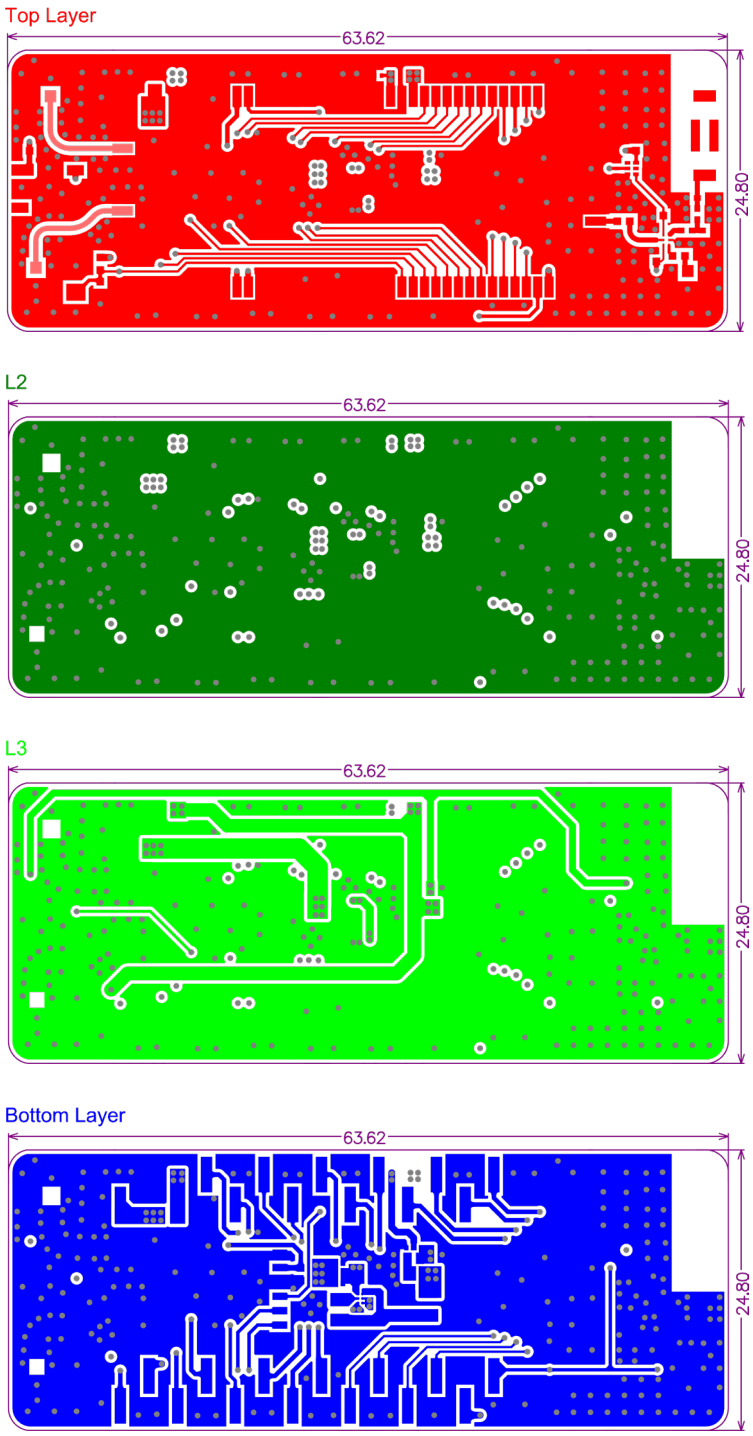

Figure 9 – PCB layers for reference design – Units: mm

20.0 Soldering Profile

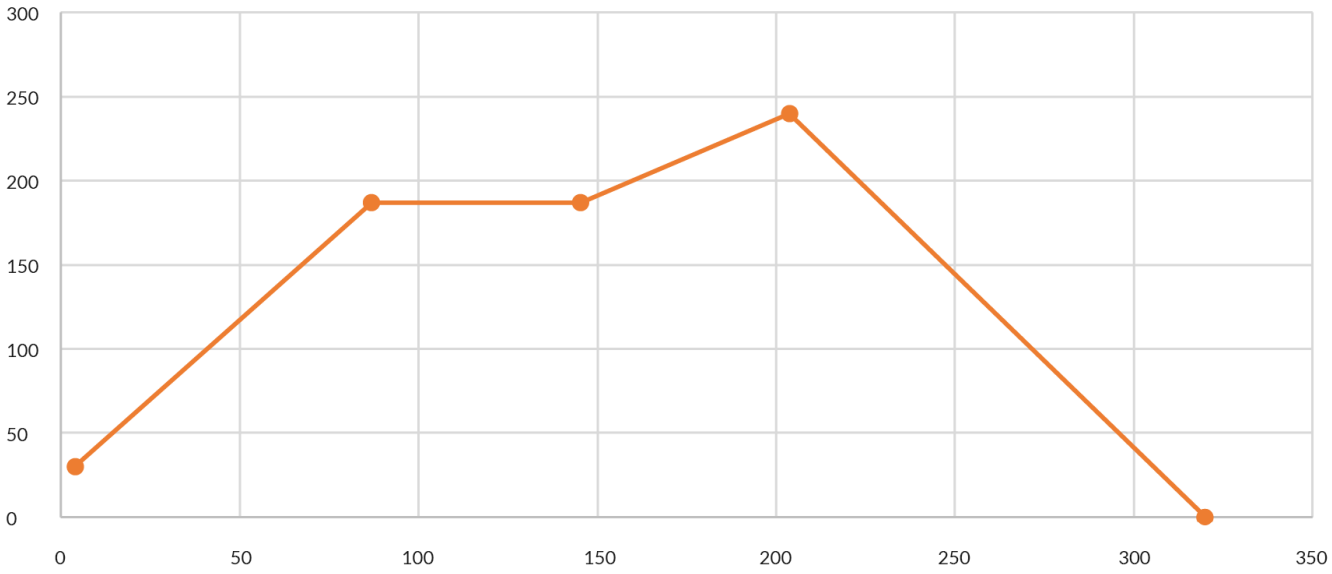

Figure 10 – Reflow soldering temperature profile

Table 21– Soldering profile temperatures

Stage	Duration/Rate	Temperature
Ramp to soak	2°C/s	Ambient – 185°C
Soak	60s	185°C
Ramp to peak	1°C/s	240°C
Reflow	45s	>225°C
Cool down	2°C/s	

The above profile is based on Alpha CVP–390 solder paste, which has been successfully tested with our devices.

21.0 Ordering Information

Table 22 – Ordering information

Product EAN	Description
0700461341598	G01 – OEM version of GPy 1.0
0700461908845	Reel of 250 G01 OEM modules
0700461908968	Reel of 500 G01 OEM modules

22.0 Packaging

22.1 Reel

Figure 11 – Mechanical drawing of reel – Units: mm

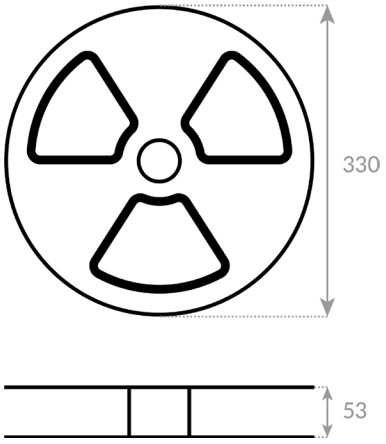

22.2 Tape

Figure 12 – Mechanical drawing of reel tape – Units: mm

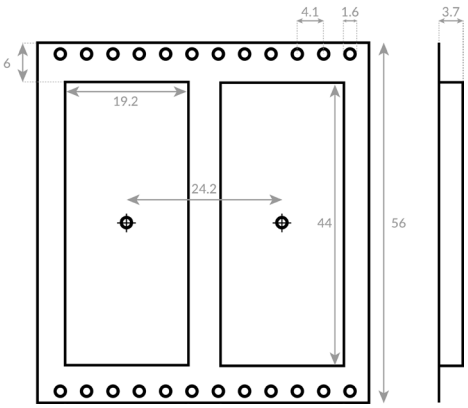

22.3 Box

Figure 13 – Mechanical drawing of reel box – Units: mm

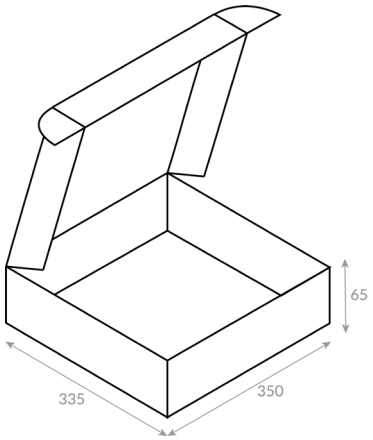

23.0 Certification

FCC 2AJMTG01R
IC 22263–G01R

Copies of the certificates can be found on our website.

Federal Communication Commission Interference Statement

This device complies with Part 15 of the FCC Rules. Operation is subject to the following two conditions:

(1) This device may not cause harmful interference.

(2) This device must accept any interference received, including interference that may cause undesired operation.

CAUTION: Changes or modifications not expressly approved by the party responsible for compliance could void the user's authority to operate the equipment.

NOTE: This equipment has been tested and found to comply with the limits for a Class B digital device, pursuant to Part 15 of the FCC Rules. These limits are designed to provide reasonable protection against harmful interferece in a residential installation. This equipment generates uses and can radiate radio frequency energy and, if not installed and used in accordance with the instructions, may cause harmful interference to radio communications.However, there is no guarantee that interference will not occur in a particular installation. If this equipment does cause harmful interference to radio or television reception, which can be determined by turning the equipment off and on, the user is encouraged to try to correct the interference by one or more of the following measures:

- Reorient or relocate the receiving antenna.
- Increase the separation between the equipment and receiver.
- Connect the equipment into an outlet on a circuit different from that to which the receiver is connected.
- Consult the dealer or an experienced radio/TV technician for help.

RF Warning Statement

This equipment complies with FCC radiation exposure limits set forth for an uncontrolled environment .

This equipment should be installed and operated with minimum distance 20cm between the radiator& your body.

This device is intended only for OEM integrators under the following conditions:

1) The antenna must be installed such that 20 cm is maintained between the antenna and users, and

2) The transmitter module may not be co-located with any other transmitter or antenna.

As long as two conditions above are met, further transmitter test will not be required. However, the OEM integrator is still responsible for testing their end-product for any additional compliance requirements required with this module installed. To ensure compliance with all non-transmitter functions the host manufacturer is responsible for ensuring compliance with the module(s) installed and fully operational. For example, if a host was previously authorized as an unintentional radiator under the Declaration of Conformity procedure without a transmitter certified module and a module is added, the host manufacturer is responsible for ensuring that the after the module is installed and operational the host continues to be compliant with the Part 15B unintentional radiator requirements.

The module is limited to OEM installation ONLY.

The module is limited to installation in mobile or fixed application.

We hereby acknowledge our responsibility to provide guidance to the host manufacturer in the event that they require assistance for ensuring compliance with the Part 15 Subpart B requirements.

IMPORTANT NOTE: In the event that these conditions cannot be met (for example certain laptop configurations or co-location with another transmitter), then the FCC authorization is no longer considered valid and the FCC ID cannot be used on the final product. In these circumstances, the OEM integrator will be responsible for reevaluating the end product(including the transmitter) and obtaining a separate FCC authorization.

End Product Labeling

The outside of final products that contains this module device must display a label referring to the enclosed module. This exterior label can use wording such as: "Contains Transmitter Module FCC ID:2AJMTG01R/IC:22263-G01R or “Contains FCC ID:2AJMTG01R/IC:22263-G01R , Any similar wording that expresses the same meaning may be used.

Manual Information to the End User

The OEM integrator has to be aware not to provide information to the end user regarding how to install or remove this RF module in the user’s manual of the end product which integrates this module.

In the user manual of the end product, the end user has to be informed that the equipment complies with FCC radio-frequency exposure guidelines set forth for an uncontrolled environment.

The end user has to also be informed that any changes or modifications not expressly approved by the manufacturer could void the user's authority to operate this equipment.

The end user manual shall include all required regulatory information/warning as show in this manual.

ISED RSS Warning/ISED RF Exposure Statement

Le présent appareil est conforme aux CNR d'ISED applicables aux appareils radio exempts de licence. L'exploitation est autorisée aux deux conditions suivantes:

(1) l'appareil ne doit pas produire de brouillage, et

(2) l'utilisateur de l'appareil doit accepter tout brouillage radioélectrique subi, même si le brouillage est susceptible d'en compromettre le fonctionnement.

ISED RF exposure statement:

Le rayonnement de la classe b repecte ISED fixaient un environnement non contrôlés.Installation et mise en œuvre de ce matériel devrait avec échangeur distance minimale entre 20 cm ton corps.Lanceurs ou ne peuvent pas coexister cette antenne ou capteurs avec d’autres.

The product only use ceramic antenna for Bluetooth and wifi which the antenna gain is 1.3 dBi integration in a host Single Modular Approval. Output power is conducted. This device is to be used in mobile or fixed applications only. Antenna gain including cable loss must not exceed 7 dBi @ FDD (Band 4), 10.51 @ FDD (Band 12) and 10.94 @ FDD (Band 13) for the purpose of satisfying the requirements of CFR 47 2.1043 & 2.1091. The antenna(s) used for this transmitter must be installed to provide a separation distance of at least 20 cm from all persons and must not be co-located or operated in conjunction with any antenna or transmitter, except in accordance with FCC multi-transmitter evaluation procedure. Compliance of this device in all final product configurations is the responsibility of the Grantee. Installation of this device into specific final products may require the submission of a Class II permissive change application containing data pertinent to RF Exposure, spurious emissions, ERP/EIRP, and host/module authentication, or new application if appropriate.

For IC , to meet RF exposure & ERP/ERIP, the maximum net gain of antennas allowed are 5.96 dBi @ FDD (Band 4), 7.14 @ FDD (Band 12) and 7.46 @ FDD (Band 13). The antenna(s) used for this transmitter must be installed to provide a separation distance of at least 20 cm from all persons and must not be co-located or operating in conjunction with any other antenna or transmitter.