System Check_Head_750MHz

DUT: D750V3-1107

Communication System: CW; Frequency: 750 MHz;Duty Cycle: 1:1
Medium: HSL_750_211119 Medium parameters used: f = 750 MHz; σ = 0.89 S/m; ε_r = 43.137; ρ = 1000 kg/m^3
Ambient Temperature：23.5 ℃; Liquid Temperature：22.5 ℃

DASY5 Configuration:
- Probe: EX3DV4 - SN3925; ConvF(10.35, 10.35, 10.35) @ 750 MHz; Calibrated: 2021/4/23
- Sensor-Surface: 1.4mm (Mechanical Surface Detection)
- Electronics: DAE4 Sn778; Calibrated: 2021/5/21
- Phantom: ELI V5.0; Type: QD OVA 002 Ax; Serial: 1131
- Measurement SW: DASY52, Version 52.10 (4);SEMCAD X Version 14.6.14 (7483)

Pin=50mW/Area Scan (61x61x1): Interpolated grid: dx=1.500 mm, dy=1.500 mm
Maximum value of SAR (interpolated) = 0.549 W/kg

Pin=50mW/Zoom Scan (5x5x7)/Cube 0: Measurement grid: dx=8mm, dy=8mm, dz=5mm
Reference Value = 26.60 V/m; Power Drift = -0.10 dB
Peak SAR (extrapolated) = 0.618 W/kg
SAR(1 g) = 0.400 W/kg; SAR(10 g) = 0.259 W/kg
Maximum value of SAR (measured) = 0.543 W/kg

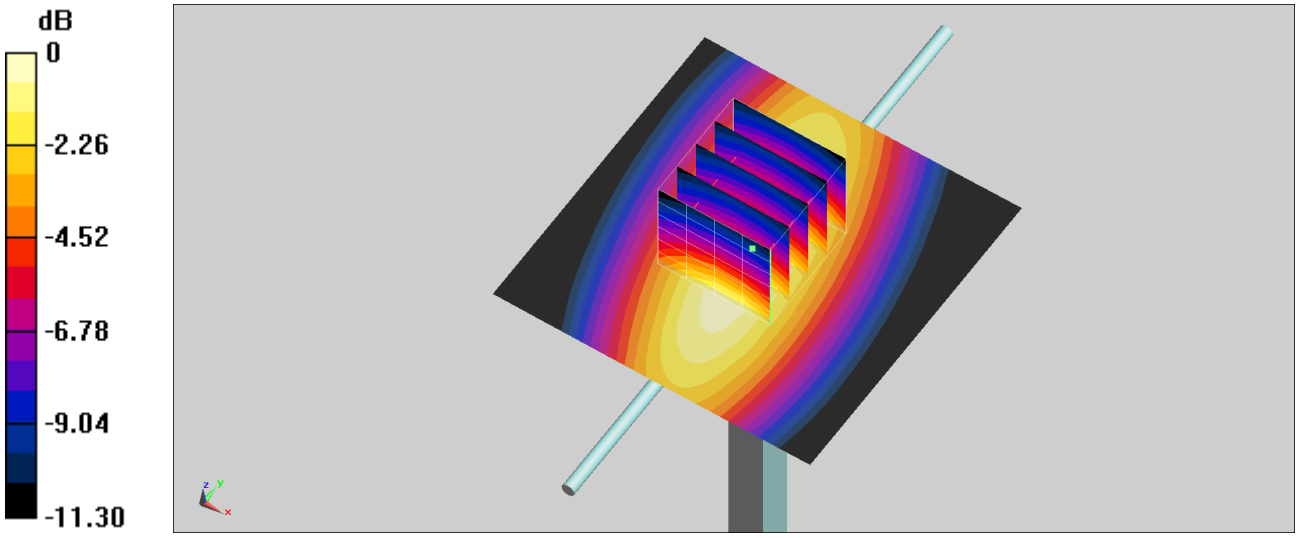

0 dB = 0.543 W/kg = -2.65 dBW/kg

System Check_Head_750MHz

DUT: D750V3-1107

Communication System: CW; Frequency: 750 MHz;Duty Cycle: 1:1
Medium: HSL_750_211122 Medium parameters used: f = 750 MHz; σ = 0.891 S/m; ε_r = 43.197; ρ = 1000 kg/m^3
Ambient Temperature：23.5 ℃; Liquid Temperature：22.5 ℃

DASY5 Configuration:
- Probe: EX3DV4 - SN3925; ConvF(10.35, 10.35, 10.35) @ 750 MHz; Calibrated: 2021/4/23
- Sensor-Surface: 1.4mm (Mechanical Surface Detection)
- Electronics: DAE4 Sn778; Calibrated: 2021/5/21
- Phantom: ELI V5.0; Type: QD OVA 002 Ax; Serial: 1131
- Measurement SW: DASY52, Version 52.10 (4);SEMCAD X Version 14.6.14 (7483)

Pin=50mW/Area Scan (61x61x1): Interpolated grid: dx=1.500 mm, dy=1.500 mm
Maximum value of SAR (interpolated) = 0.508 W/kg

Pin=50mW/Zoom Scan (5x5x7)/Cube 0: Measurement grid: dx=8mm, dy=8mm, dz=5mm
Reference Value = 24.86 V/m; Power Drift = -0.14 dB
Peak SAR (extrapolated) = 0.642 W/kg
SAR(1 g) = 0.396 W/kg; SAR(10 g) = 0.261 W/kg
Maximum value of SAR (measured) = 0.562 W/kg

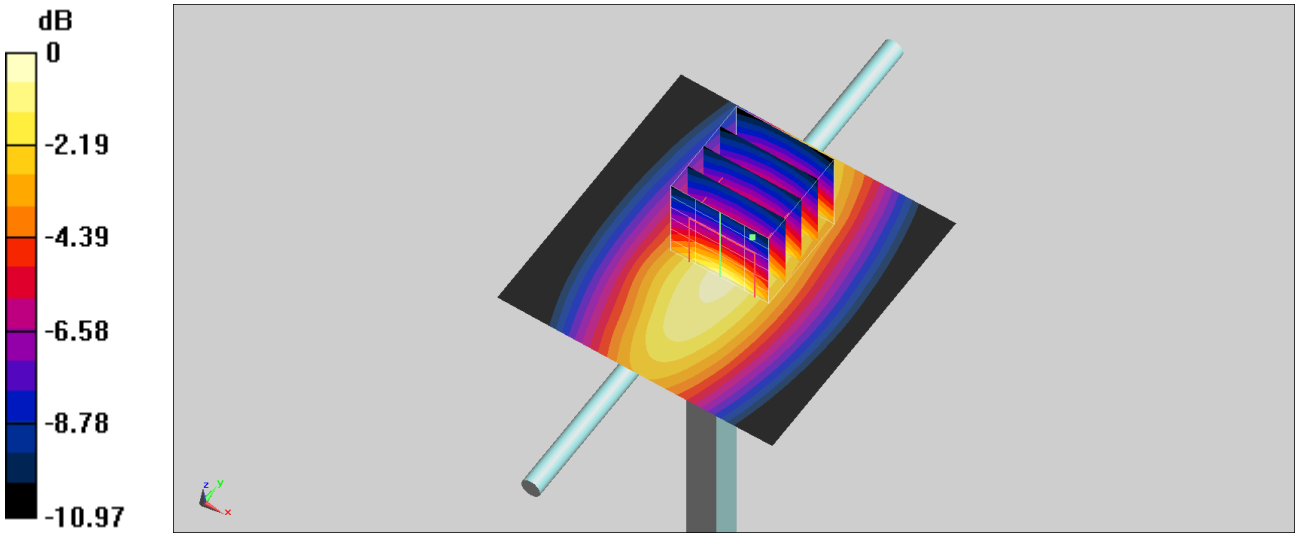

0 dB = 0.562 W/kg = -2.50 dBW/kg

System Check_Head_835MHz

DUT: D835V2-4d167

Communication System: CW; Frequency: 835 MHz;Duty Cycle: 1:1
Medium: HSL_850_211119 Medium parameters used: f = 835 MHz; σ = 0.92 S/m; ε_r = 42.721; ρ = 1000 kg/m^3
Ambient Temperature：23.5 ℃; Liquid Temperature：22.5 ℃

DASY5 Configuration:
- Probe: EX3DV4 - SN3925; ConvF(10.04, 10.04, 10.04) @ 835 MHz; Calibrated: 2021/4/23
- Sensor-Surface: 1.4mm (Mechanical Surface Detection)
- Electronics: DAE4 Sn778; Calibrated: 2021/5/21
- Phantom: ELI V5.0; Type: QD OVA 002 Ax; Serial: 1131
- Measurement SW: DASY52, Version 52.10 (4);SEMCAD X Version 14.6.14 (7483)

Pin=50mW/Area Scan (61x61x1): Interpolated grid: dx=1.500 mm, dy=1.500 mm
Maximum value of SAR (interpolated) = 0.638 W/kg

Pin=50mW/Zoom Scan (5x5x7)/Cube 0: Measurement grid: dx=8mm, dy=8mm, dz=5mm
Reference Value = 27.46 V/m; Power Drift = 0.00 dB
Peak SAR (extrapolated) = 0.727 W/kg
SAR(1 g) = 0.473 W/kg; SAR(10 g) = 0.306 W/kg
Maximum value of SAR (measured) = 0.641 W/kg

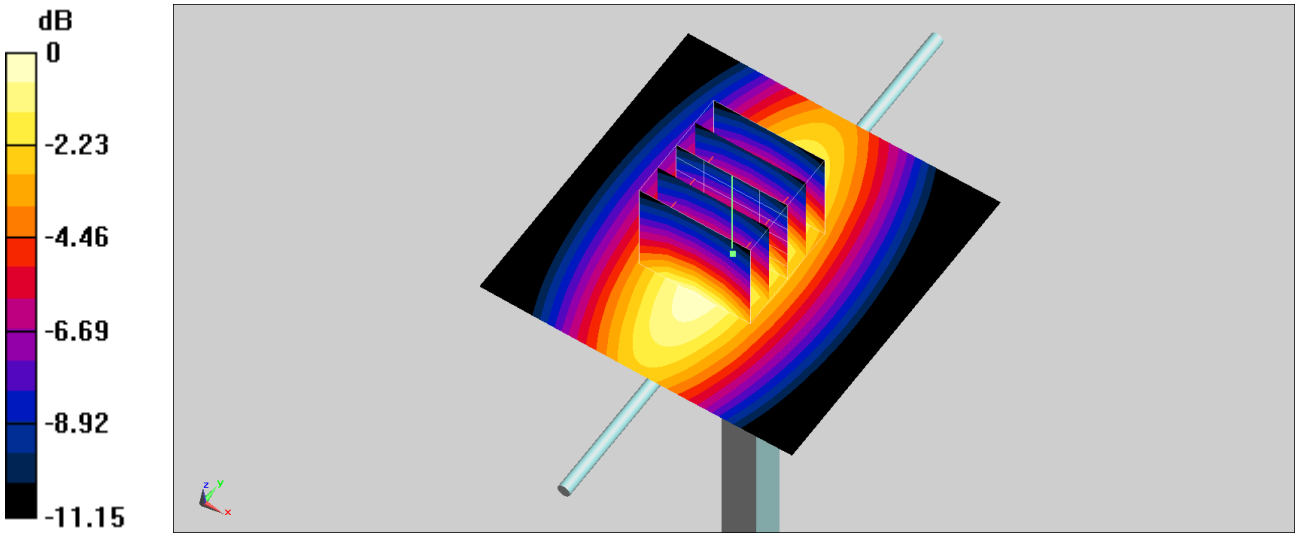

0 dB = 0.641 W/kg = -1.93 dBW/kg

System Check_Head_835MHz

DUT: D835V2-4d167

Communication System: CW; Frequency: 835 MHz;Duty Cycle: 1:1
Medium: HSL_850_211122 Medium parameters used: f = 835 MHz; σ = 0.922 S/m; ε_r = 42.781; ρ = 1000 kg/m^3
Ambient Temperature：23.5 ℃; Liquid Temperature：22.5 ℃

DASY5 Configuration:
- Probe: EX3DV4 - SN3925; ConvF(10.04, 10.04, 10.04) @ 835 MHz; Calibrated: 2021/4/23
- Sensor-Surface: 1.4mm (Mechanical Surface Detection)
- Electronics: DAE4 Sn778; Calibrated: 2021/5/21
- Phantom: ELI V5.0; Type: QD OVA 002 Ax; Serial: 1131
- Measurement SW: DASY52, Version 52.10 (4);SEMCAD X Version 14.6.14 (7483)

Pin=50mW/Area Scan (61x61x1): Interpolated grid: dx=1.500 mm, dy=1.500 mm
Maximum value of SAR (interpolated) = 0.627 W/kg

Pin=50mW/Zoom Scan (5x5x7)/Cube 0: Measurement grid: dx=8mm, dy=8mm, dz=5mm
Reference Value = 27.34 V/m; Power Drift = -0.08 dB
Peak SAR (extrapolated) = 0.715 W/kg
SAR(1 g) = 0.456 W/kg; SAR(10 g) = 0.291 W/kg
Maximum value of SAR (measured) = 0.625 W/kg

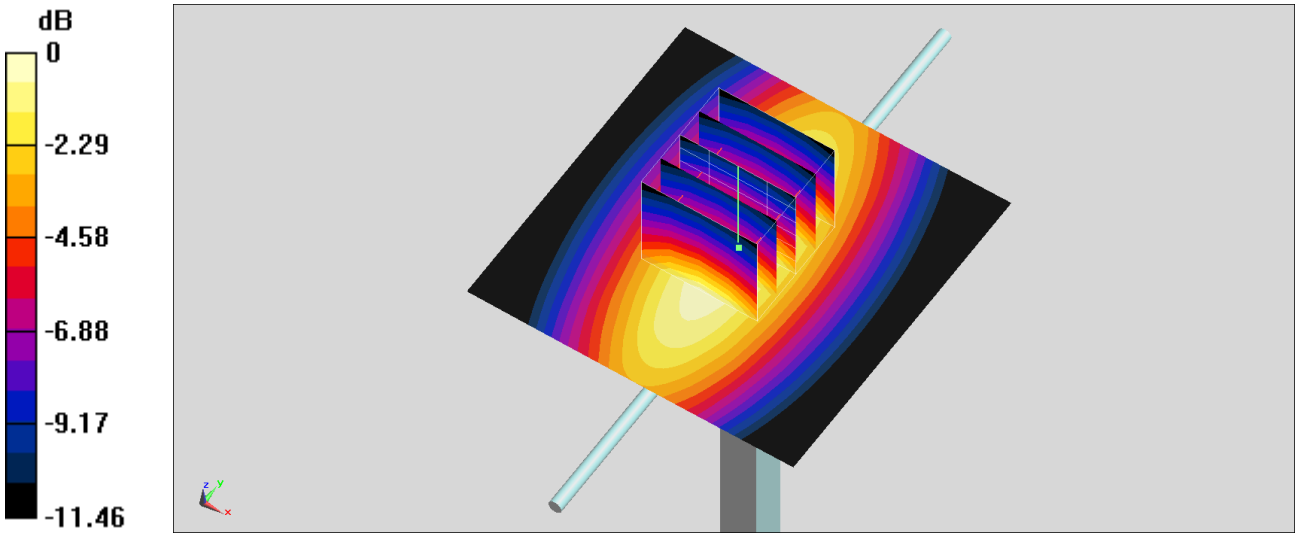

0 dB = 0.625 W/kg = -2.04 dBW/kg

System Check_Head_1750MHz

DUT: D1750V2-1112

Communication System: CW; Frequency: 1750 MHz;Duty Cycle: 1:1
Medium: HSL_1750_211118 Medium parameters used: f = 1750 MHz; σ = 1.389 S/m; ε_r = 40.296; ρ = 1000 kg/m^3
Ambient Temperature：23.5 ℃; Liquid Temperature：22.5 ℃

DASY5 Configuration:
- Probe: EX3DV4 - SN3925; ConvF(8.77, 8.77, 8.77) @ 1750 MHz; Calibrated: 2021/4/23
- Sensor-Surface: 1.4mm (Mechanical Surface Detection)
- Electronics: DAE4 Sn778; Calibrated: 2021/5/21
- Phantom: ELI V5.0; Type: QD OVA 002 Ax; Serial: 1131
- Measurement SW: DASY52, Version 52.10 (4);SEMCAD X Version 14.6.14 (7483)

Pin=50mW/Area Scan (61x61x1): Interpolated grid: dx=1.500 mm, dy=1.500 mm
Maximum value of SAR (interpolated) = 2.80 W/kg

Pin=50mW/Zoom Scan (5x5x7)/Cube 0: Measurement grid: dx=8mm, dy=8mm, dz=5mm
Reference Value = 46.31 V/m; Power Drift = -0.17 dB
Peak SAR (extrapolated) = 3.29 W/kg
SAR(1 g) = 1.77 W/kg; SAR(10 g) = 0.929 W/kg
Maximum value of SAR (measured) = 2.75 W/kg

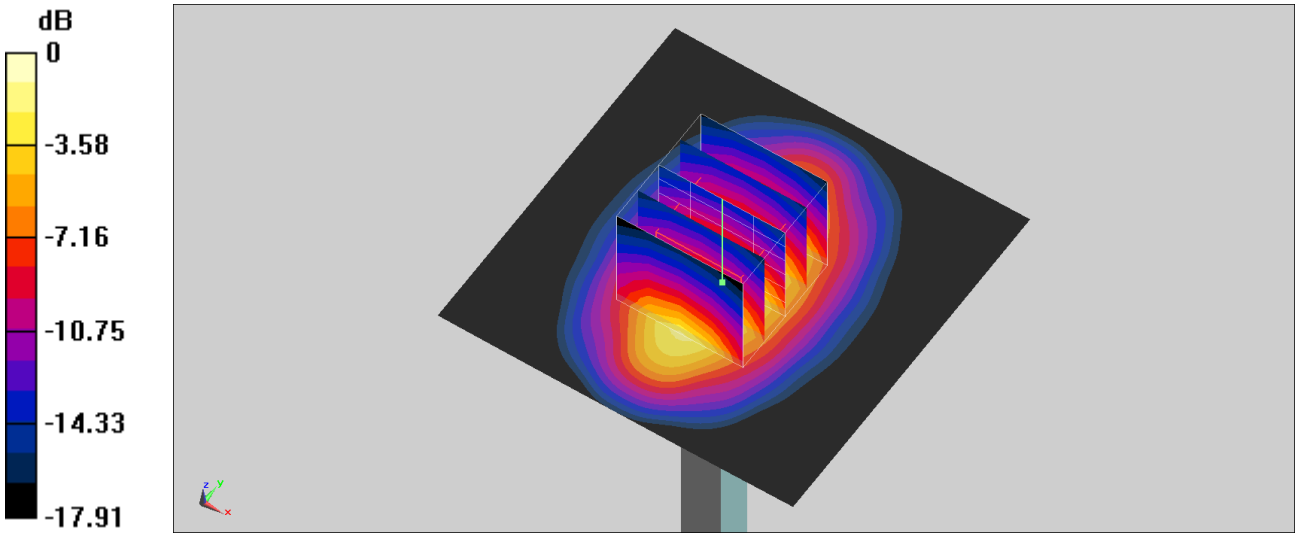

0 dB = 2.75 W/kg = 4.39 dBW/kg

System Check_Head_1750MHz

DUT: D1750V2-1112

Communication System: CW; Frequency: 1750 MHz;Duty Cycle: 1:1
Medium: HSL_1750_211123 Medium parameters used: f = 1750 MHz; σ = 1.372 S/m; ε_r = 39.825; ρ = 1000 kg/m^3
Ambient Temperature：23.5 ℃; Liquid Temperature：22.5 ℃

DASY5 Configuration:
- Probe: EX3DV4 - SN3925; ConvF(8.77, 8.77, 8.77) @ 1750 MHz; Calibrated: 2021/4/23
- Sensor-Surface: 1.4mm (Mechanical Surface Detection)
- Electronics: DAE4 Sn778; Calibrated: 2021/5/21
- Phantom: ELI V5.0; Type: QD OVA 002 Ax; Serial: 1131
- Measurement SW: DASY52, Version 52.10 (4);SEMCAD X Version 14.6.14 (7483)

Pin=50mW/Area Scan (61x61x1): Interpolated grid: dx=1.500 mm, dy=1.500 mm
Maximum value of SAR (interpolated) = 2.75 W/kg

Pin=50mW/Zoom Scan (5x5x7)/Cube 0: Measurement grid: dx=8mm, dy=8mm, dz=5mm
Reference Value = 45.62 V/m; Power Drift = -0.16 dB
Peak SAR (extrapolated) = 3.39 W/kg
SAR(1 g) = 1.82 W/kg; SAR(10 g) = 0.976 W/kg
Maximum value of SAR (measured) = 2.79 W/kg

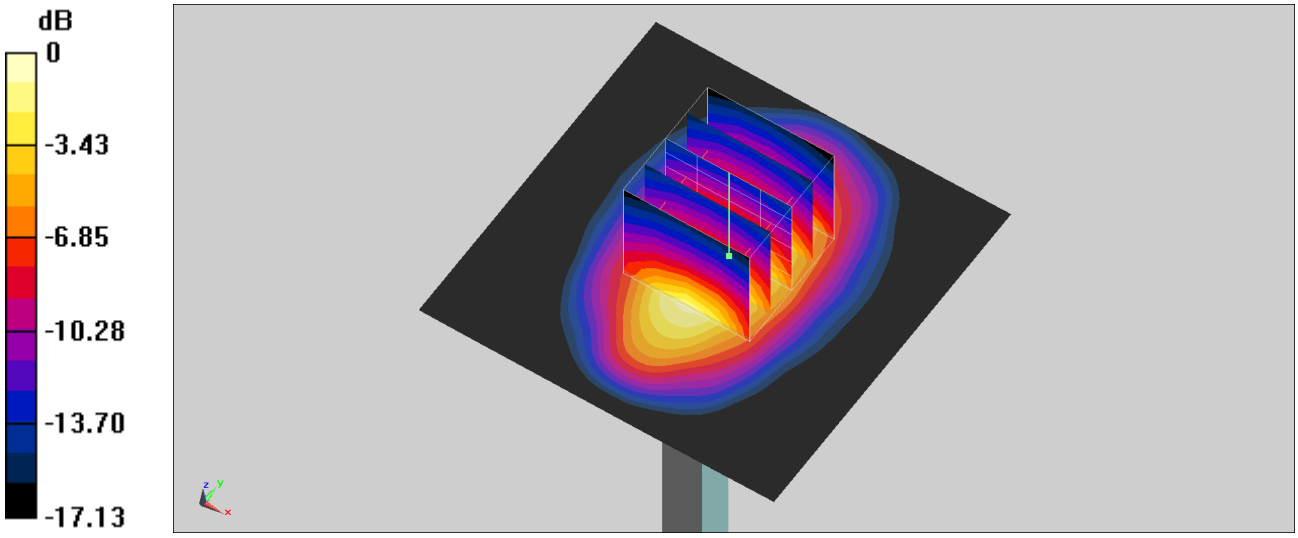

0 dB = 2.79 W/kg = 4.46 dBW/kg

System Check_Head_1900MHz

DUT: D1900V2-5d185

Communication System: CW; Frequency: 1900 MHz;Duty Cycle: 1:1
Medium: HSL_1900_211118 Medium parameters used: f = 1900 MHz; σ = 1.405 S/m; ε_r = 40.193; ρ = 1000 kg/m^3
Ambient Temperature：23.5 ℃; Liquid Temperature：22.5 ℃

DASY5 Configuration:
- Probe: EX3DV4 - SN3925; ConvF(8.45, 8.45, 8.45) @ 1900 MHz; Calibrated: 2021/4/23
- Sensor-Surface: 1.4mm (Mechanical Surface Detection)
- Electronics: DAE4 Sn778; Calibrated: 2021/5/21
- Phantom: ELI V5.0; Type: QD OVA 002 Ax; Serial: 1131
- Measurement SW: DASY52, Version 52.10 (4);SEMCAD X Version 14.6.14 (7483)

Pin=50mW/Area Scan (61x61x1): Interpolated grid: dx=1.500 mm, dy=1.500 mm
Maximum value of SAR (interpolated) = 3.00 W/kg

Pin=50mW/Zoom Scan (5x5x7)/Cube 0: Measurement grid: dx=8mm, dy=8mm, dz=5mm
Reference Value = 47.76 V/m; Power Drift = -0.08 dB
Peak SAR (extrapolated) = 3.65 W/kg
SAR(1 g) = 1.89 W/kg; SAR(10 g) = 0.967 W/kg
Maximum value of SAR (measured) = 3.02 W/kg

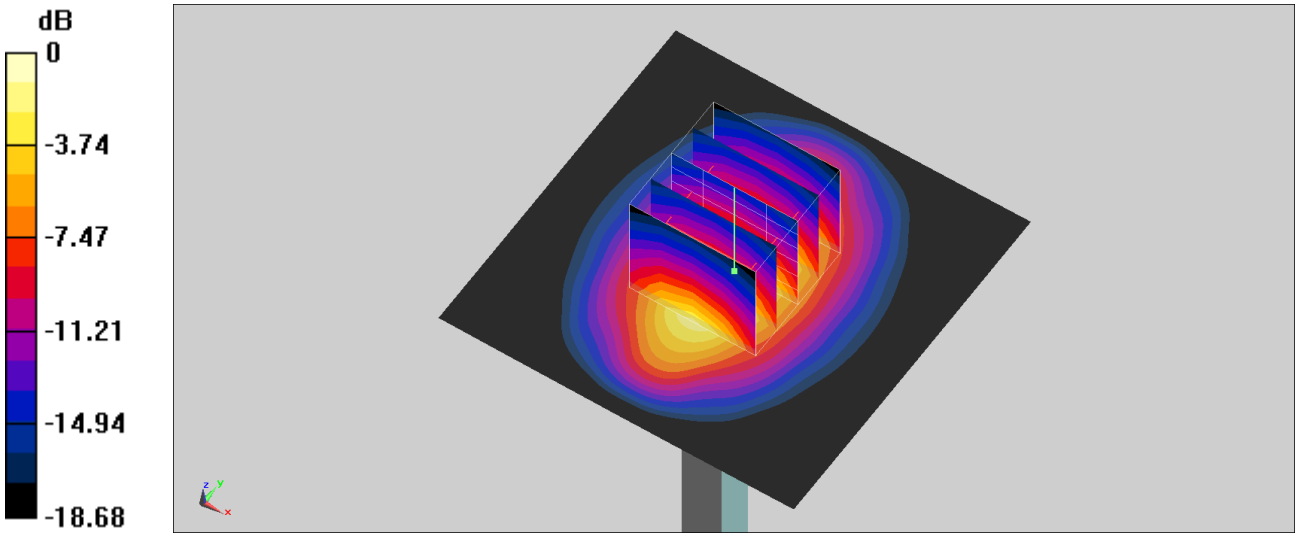

0 dB = 3.02 W/kg = 4.80 dBW/kg

System Check_Head_1900MHz

DUT: D1900V2-5d185

Communication System: CW; Frequency: 1900 MHz;Duty Cycle: 1:1
Medium: HSL_1900_211123 Medium parameters used: f = 1900 MHz; σ = 1.386 S/m; ε_r = 39.722; ρ = 1000 kg/m^3
Ambient Temperature：23.5 ℃; Liquid Temperature：22.5 ℃

DASY5 Configuration:
- Probe: EX3DV4 - SN3925; ConvF(8.45, 8.45, 8.45) @ 1900 MHz; Calibrated: 2021/4/23
- Sensor-Surface: 1.4mm (Mechanical Surface Detection)
- Electronics: DAE4 Sn778; Calibrated: 2021/5/21
- Phantom: ELI V5.0; Type: QD OVA 002 Ax; Serial: 1131
- Measurement SW: DASY52, Version 52.10 (4);SEMCAD X Version 14.6.14 (7483)

Pin=50mW/Area Scan (61x61x1): Interpolated grid: dx=1.500 mm, dy=1.500 mm
Maximum value of SAR (interpolated) = 2.91 W/kg

Pin=50mW/Zoom Scan (5x5x7)/Cube 0: Measurement grid: dx=8mm, dy=8mm, dz=5mm
Reference Value = 44.62 V/m; Power Drift = -0.04 dB
Peak SAR (extrapolated) = 3.28 W/kg
SAR(1 g) = 1.89 W/kg; SAR(10 g) = 1.01 W/kg
Maximum value of SAR (measured) = 2.79 W/kg

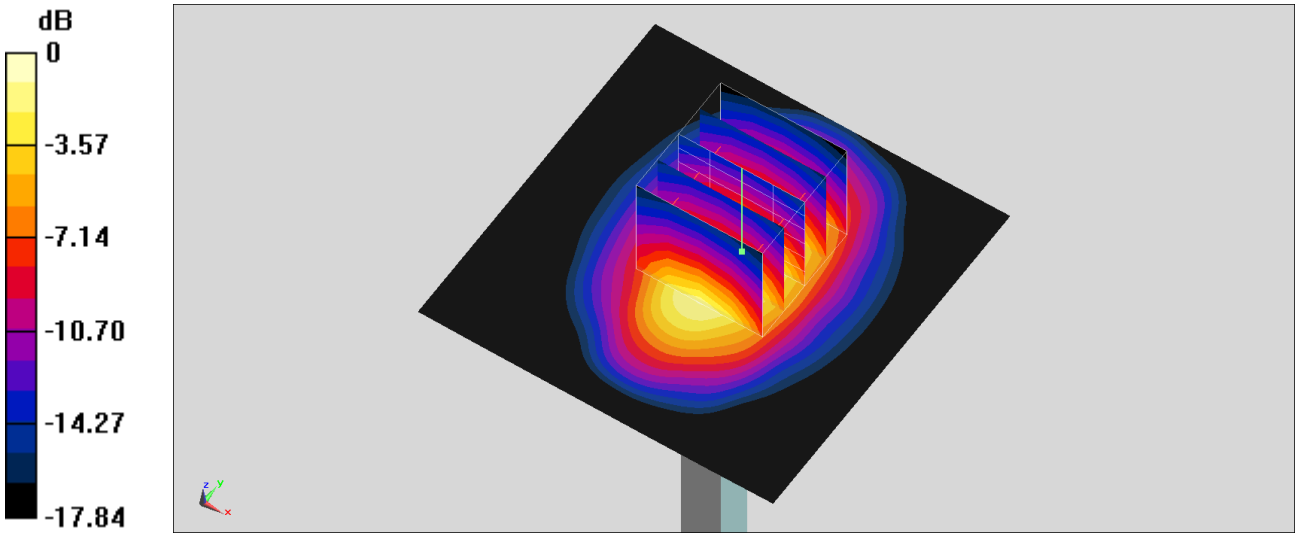

0 dB = 2.79 W/kg = 4.46 dBW/kg

System Check_Head_2300MHz

DUT: D2300V2-1006

Communication System: CW; Frequency: 2300 MHz;Duty Cycle: 1:1
Medium: HSL_2300_211120 Medium parameters used: f = 2300 MHz; σ = 1.699 S/m; ε_r = 39.546; ρ = 1000 kg/m^3
Ambient Temperature：23.5 ℃; Liquid Temperature：22.5 ℃

DASY5 Configuration:
- Probe: EX3DV4 - SN3925; ConvF(8.24, 8.24, 8.24) @ 2300 MHz; Calibrated: 2021/4/23
- Sensor-Surface: 1.4mm (Mechanical Surface Detection)
- Electronics: DAE4 Sn778; Calibrated: 2021/5/21
- Phantom: ELI V5.0; Type: QD OVA 002 Ax; Serial: 1131
- Measurement SW: DASY52, Version 52.10 (4);SEMCAD X Version 14.6.14 (7483)

Pin=50mW/Area Scan (81x81x1): Interpolated grid: dx=1.200 mm, dy=1.200 mm
Maximum value of SAR (interpolated) = 3.77 W/kg

Pin=50mW/Zoom Scan (7x7x7)/Cube 0: Measurement grid: dx=5mm, dy=5mm, dz=5mm
Reference Value = 48.75 V/m; Power Drift = -0.11 dB
Peak SAR (extrapolated) = 4.63 W/kg
SAR(1 g) = 2.29 W/kg; SAR(10 g) = 1.09 W/kg
Maximum value of SAR (measured) = 3.77 W/kg

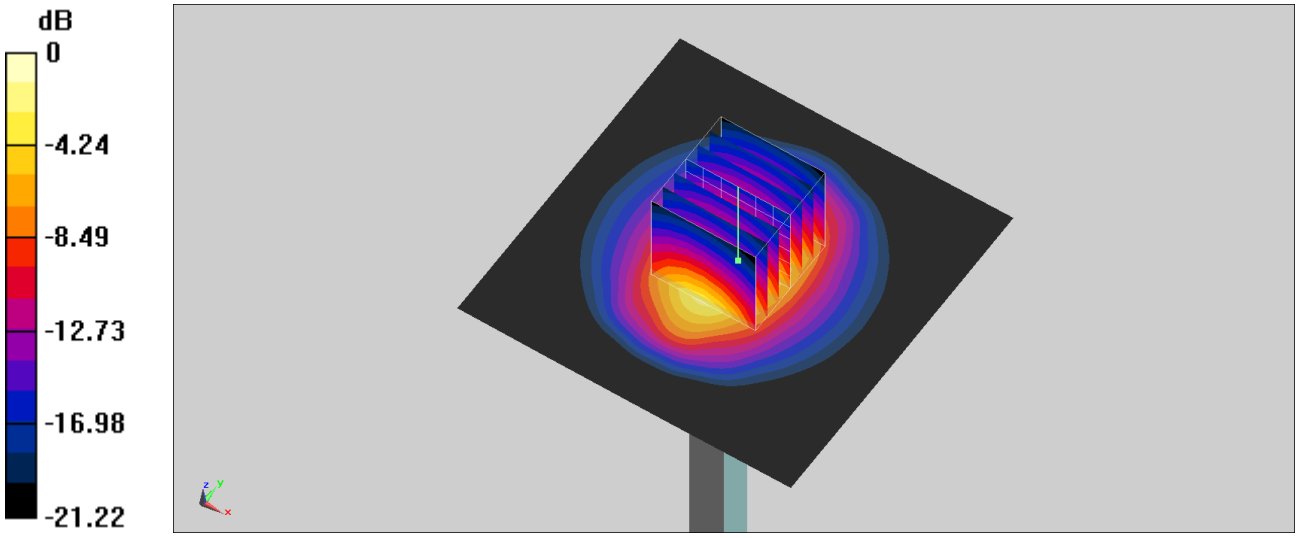

0 dB = 3.77 W/kg = 5.76 dBW/kg

System Check_Head_2300MHz

DUT: D2300V2-1006

Communication System: CW; Frequency: 2300 MHz;Duty Cycle: 1:1
Medium: HSL_2300_211122 Medium parameters used: f = 2300 MHz; σ = 1.685 S/m; ε_r = 39.199; ρ = 1000 kg/m^3
Ambient Temperature：23.5 ℃; Liquid Temperature：22.5 ℃

DASY5 Configuration:
- Probe: EX3DV4 - SN3925; ConvF(8.24, 8.24, 8.24) @ 2300 MHz; Calibrated: 2021/4/23
- Sensor-Surface: 1.4mm (Mechanical Surface Detection)
- Electronics: DAE4 Sn778; Calibrated: 2021/5/21
- Phantom: ELI V5.0; Type: QD OVA 002 Ax; Serial: 1131
- Measurement SW: DASY52, Version 52.10 (4);SEMCAD X Version 14.6.14 (7483)

Pin=50mW/Area Scan (81x81x1): Interpolated grid: dx=1.200 mm, dy=1.200 mm
Maximum value of SAR (interpolated) = 3.87 W/kg

Pin=50mW/Zoom Scan (7x7x7)/Cube 0: Measurement grid: dx=5mm, dy=5mm, dz=5mm
Reference Value = 48.39 V/m; Power Drift = -0.17 dB
Peak SAR (extrapolated) = 4.76 W/kg
SAR(1 g) = 2.41 W/kg; SAR(10 g) = 1.14 W/kg
Maximum value of SAR (measured) = 3.98 W/kg

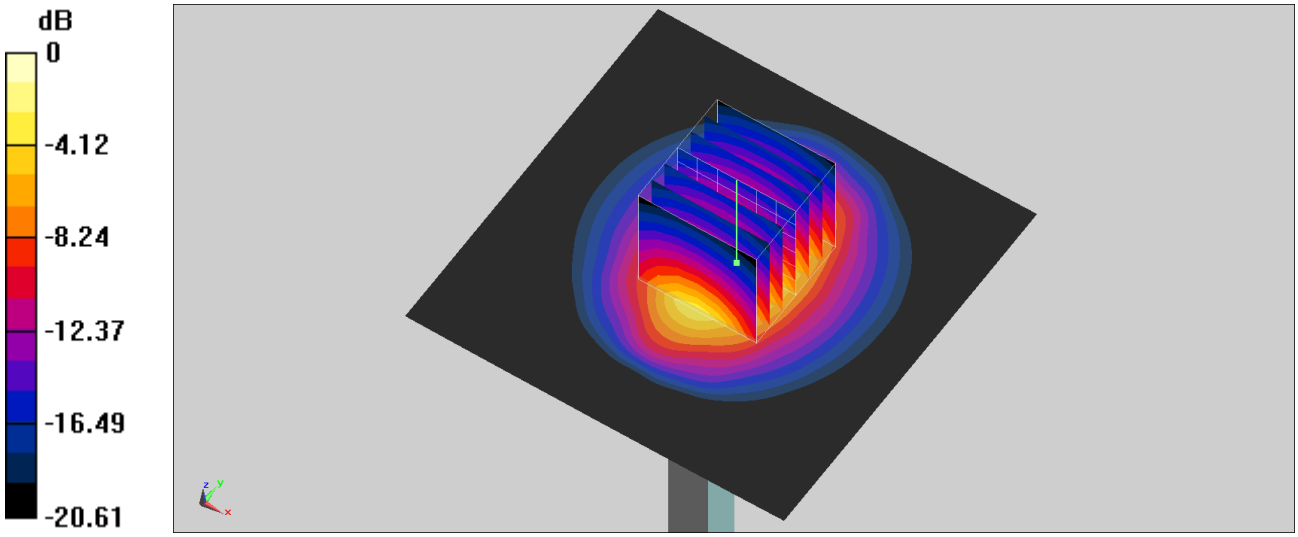

0 dB = 3.98 W/kg = 6.00 dBW/kg

System Check_Head_2600MHz

DUT: D2600V2-1078

Communication System: CW; Frequency: 2600 MHz;Duty Cycle: 1:1
Medium: HSL_2600_211120 Medium parameters used: f = 2600 MHz; σ = 2.05 S/m; ε_r = 38.441; ρ = 1000 kg/m^3
Ambient Temperature：23.5 ℃; Liquid Temperature：22.5 ℃

DASY5 Configuration:
- Probe: EX3DV4 - SN3925; ConvF(7.73, 7.73, 7.73) @ 2600 MHz; Calibrated: 2021/4/23
- Sensor-Surface: 1.4mm (Mechanical Surface Detection)
- Electronics: DAE4 Sn778; Calibrated: 2021/5/21
- Phantom: ELI V5.0; Type: QD OVA 002 Ax; Serial: 1131
- Measurement SW: DASY52, Version 52.10 (4);SEMCAD X Version 14.6.14 (7483)

Pin=50mW/Area Scan (81x81x1): Interpolated grid: dx=1.200 mm, dy=1.200 mm
Maximum value of SAR (interpolated) = 4.55 W/kg

Pin=50mW/Zoom Scan (7x7x7)/Cube 0: Measurement grid: dx=5mm, dy=5mm, dz=5mm
Reference Value = 48.54 V/m; Power Drift = -0.00 dB
Peak SAR (extrapolated) = 5.74 W/kg
SAR(1 g) = 2.72 W/kg; SAR(10 g) = 1.22 W/kg
Maximum value of SAR (measured) = 4.64 W/kg

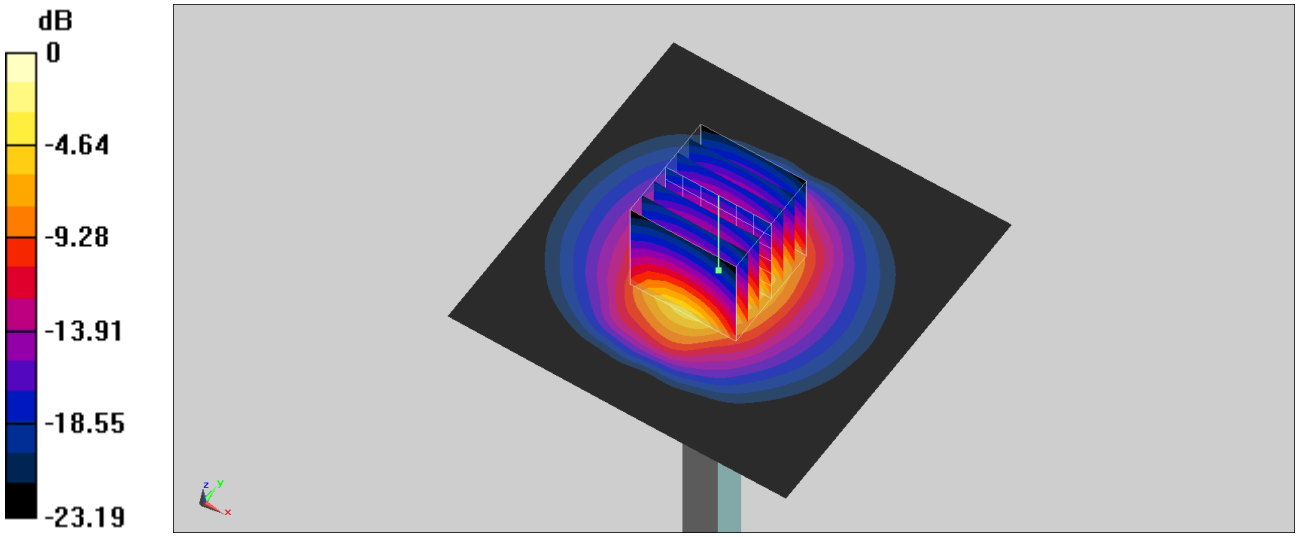

0 dB = 4.64 W/kg = 6.67 dBW/kg

System Check_Head_2600MHz

DUT: D2600V2-1078

Communication System: CW; Frequency: 2600 MHz;Duty Cycle: 1:1
Medium: HSL_2600_211121 Medium parameters used: f = 2600 MHz; σ = 2.033 S/m; ε_r = 38.533; ρ = 1000 kg/m^3
Ambient Temperature：23.5 ℃; Liquid Temperature：22.5 ℃

DASY5 Configuration:
- Probe: EX3DV4 - SN3925; ConvF(7.73, 7.73, 7.73) @ 2600 MHz; Calibrated: 2021/4/23
- Sensor-Surface: 1.4mm (Mechanical Surface Detection)
- Electronics: DAE4 Sn778; Calibrated: 2021/5/21
- Phantom: ELI V5.0; Type: QD OVA 002 Ax; Serial: 1131
- Measurement SW: DASY52, Version 52.10 (4);SEMCAD X Version 14.6.14 (7483)

Pin=50mW/Area Scan (81x81x1): Interpolated grid: dx=1.200 mm, dy=1.200 mm
Maximum value of SAR (interpolated) = 4.44 W/kg

Pin=50mW/Zoom Scan (7x7x7)/Cube 0: Measurement grid: dx=5mm, dy=5mm, dz=5mm
Reference Value = 47.14 V/m; Power Drift = -0.09 dB
Peak SAR (extrapolated) = 5.46 W/kg
SAR(1 g) = 2.67 W/kg; SAR(10 g) = 1.27 W/kg
Maximum value of SAR (measured) = 4.53 W/kg

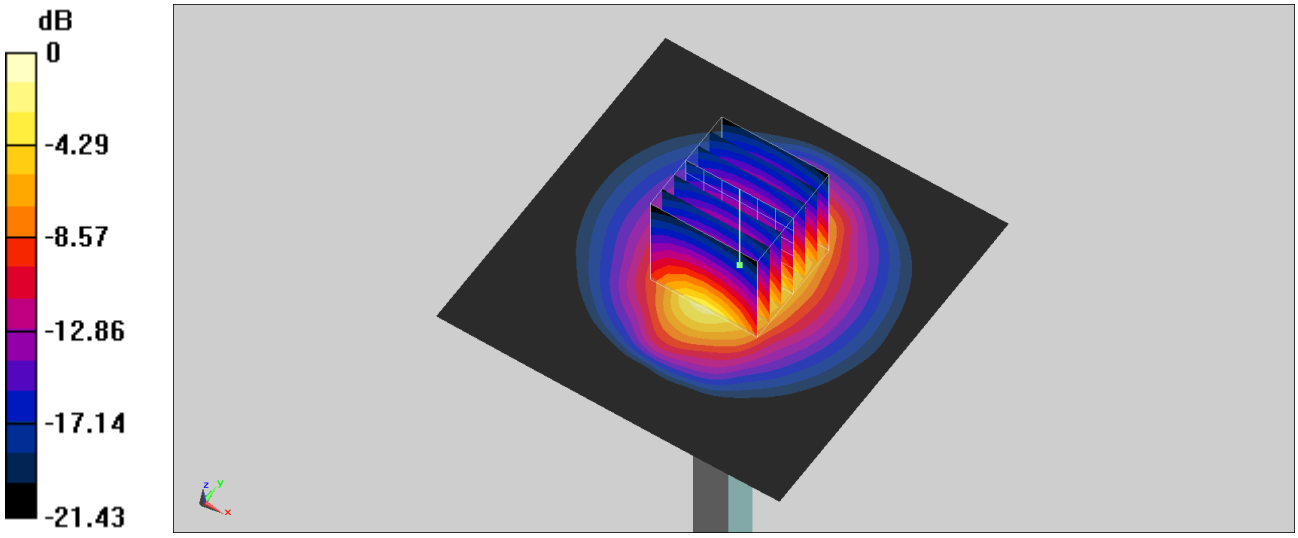

0 dB = 4.53 W/kg = 6.56 dBW/kg

System Check_Head_2600MHz

DUT: D2600V2-1078

Communication System: CW; Frequency: 2600 MHz;Duty Cycle: 1:1
Medium: HSL_2600_211122 Medium parameters used: f = 2600 MHz; σ = 2.034 S/m; ε_r = 38.094; ρ = 1000 kg/m^3
Ambient Temperature：23.5 ℃; Liquid Temperature：22.5 ℃

DASY5 Configuration:
- Probe: EX3DV4 - SN3925; ConvF(7.73, 7.73, 7.73) @ 2600 MHz; Calibrated: 2021/4/23
- Sensor-Surface: 1.4mm (Mechanical Surface Detection)
- Electronics: DAE4 Sn778; Calibrated: 2021/5/21
- Phantom: ELI V5.0; Type: QD OVA 002 Ax; Serial: 1131
- Measurement SW: DASY52, Version 52.10 (4);SEMCAD X Version 14.6.14 (7483)

Pin=50mW/Area Scan (81x81x1): Interpolated grid: dx=1.200 mm, dy=1.200 mm
Maximum value of SAR (interpolated) = 4.44 W/kg

Pin=50mW/Zoom Scan (7x7x7)/Cube 0: Measurement grid: dx=5mm, dy=5mm, dz=5mm
Reference Value = 47.14 V/m; Power Drift = -0.05 dB
Peak SAR (extrapolated) = 5.47 W/kg
SAR(1 g) = 2.67 W/kg; SAR(10 g) = 1.27 W/kg
Maximum value of SAR (measured) = 4.53 W/kg

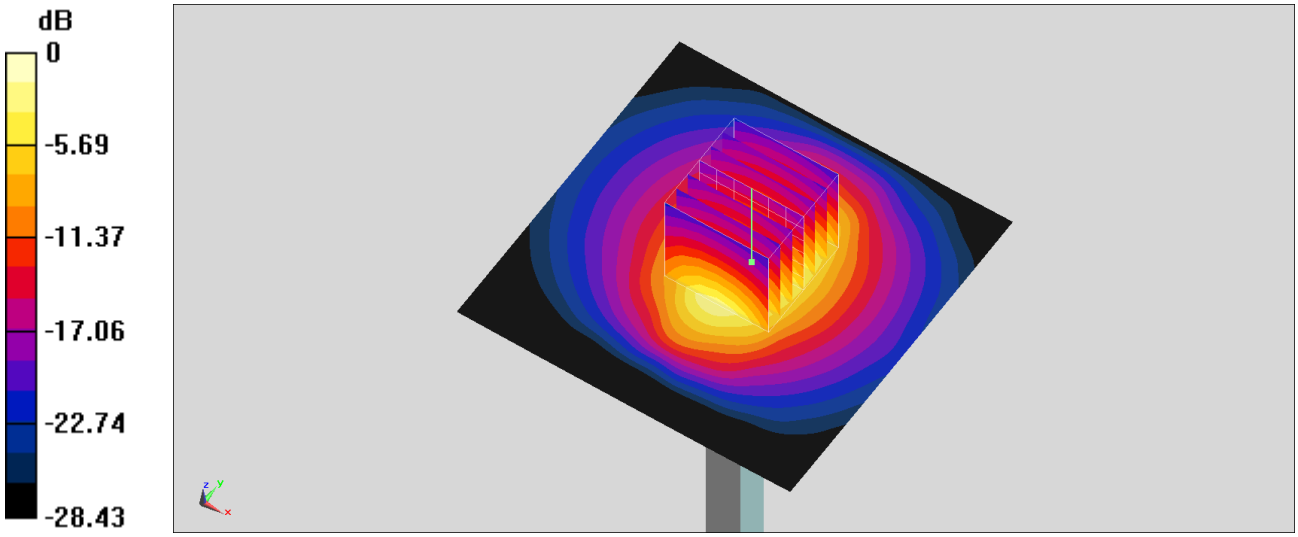

0 dB = 4.53 W/kg = 6.56 dBW/kg

System Check_Head_2600MHz

DUT: D2600V2-1008

Communication System: CW; Frequency: 2600 MHz;Duty Cycle: 1:1
Medium: HSL_2600_220106 Medium parameters used: f = 2600 MHz; σ = 2.028 S/m; ε_r = 38.661; ρ = 1000 kg/m^3
Ambient Temperature：23.2 ℃; Liquid Temperature：22.2 ℃

DASY5 Configuration:
- Probe: EX3DV4 - SN3925; ConvF(7.73, 7.73, 7.73) @ 2600 MHz; Calibrated: 2021/4/23
- Sensor-Surface: 1.4mm (Mechanical Surface Detection)
- Electronics: DAE4 Sn778; Calibrated: 2021/5/21
- Phantom: ELI V5.0; Type: QD OVA 002 Ax; Serial: 1131
- Measurement SW: DASY52, Version 52.10 (4);SEMCAD X Version 14.6.14 (7483)

Pin=50mW/Area Scan (81x81x1): Interpolated grid: dx=1.200 mm, dy=1.200 mm
Maximum value of SAR (interpolated) = 4.50 W/kg

Pin=50mW/Zoom Scan (7x7x7)/Cube 0: Measurement grid: dx=5mm, dy=5mm, dz=5mm
Reference Value = 48.54 V/m; Power Drift = -0.00 dB
Peak SAR (extrapolated) = 5.68 W/kg
SAR(1 g) = 2.7 W/kg; SAR(10 g) = 1.21 W/kg
Maximum value of SAR (measured) = 4.59 W/kg

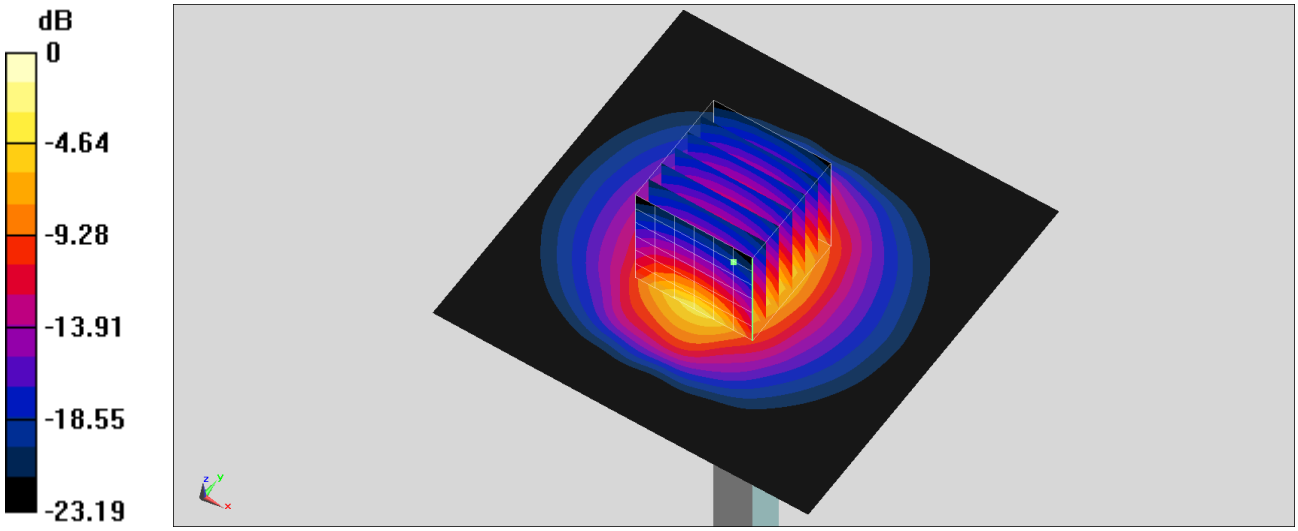

0 dB = 4.59 W/kg = 6.62 dBW/kg

Test Laboratory: Sporton International Inc. SAR/HAC Testing Lab Date: 2022/3/16

System Check_Head_2600MHz

DUT: D2600V2-1008

Communication System: CW; Frequency: 2600 MHz;Duty Cycle: 1:1
Medium: HSL_2600_220316 Medium parameters used: f = 2600 MHz; σ = 2.028 S/m; ε_r = 38.661; ρ = 1000 kg/m^3
Ambient Temperature：23.2 ℃; Liquid Temperature：22.2 ℃

DASY5 Configuration:
- Probe: EX3DV4 - SN3976; ConvF(7.66, 7.66, 7.66) @ 2600 MHz; Calibrated: 2022/1/27
- Sensor-Surface: 1.4mm (Mechanical Surface Detection)
- Electronics: DAE4 Sn778; Calibrated: 2021/5/21
- Phantom: ELI V5.0; Type: QD OVA 002 Ax; Serial: 1131
- Measurement SW: DASY52, Version 52.10 (4);SEMCAD X Version 14.6.14 (7483)

Pin=50mW/Area Scan (71x71x1): Interpolated grid: dx=1.200 mm, dy=1.200 mm
Maximum value of SAR (interpolated) = 4.79 W/kg

Pin=50mW/Zoom Scan (7x7x7)/Cube 0: Measurement grid: dx=5mm, dy=5mm, dz=5mm
Reference Value = 50.89 V/m; Power Drift = -0.14 dB
Peak SAR (extrapolated) = 5.93 W/kg
SAR(1 g) = 2.8 W/kg; SAR(10 g) = 1.25 W/kg
Maximum value of SAR (measured) = 4.77 W/kg

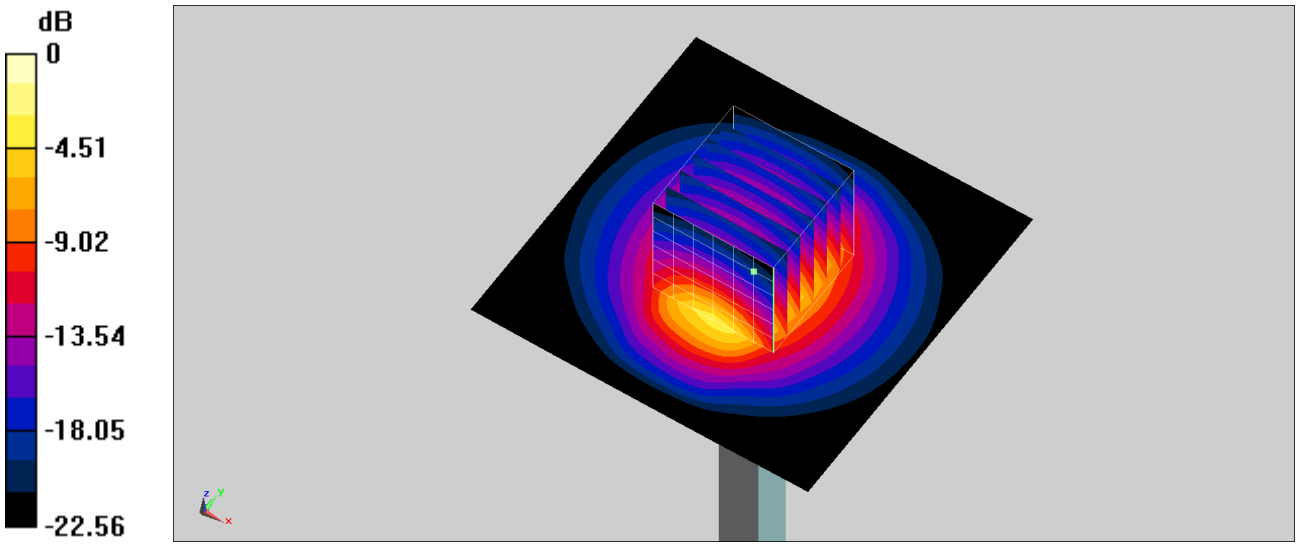

0 dB = 4.77 W/kg = 6.79 dBW/kg

System Check_Head_3500MHz

DUT: D3500V2-1014

Communication System: CW; Frequency: 3500 MHz;Duty Cycle: 1:1
Medium: HSL_3300-4200_211117 Medium parameters used: f = 3500 MHz; σ = 2.95 S/m; ε_r = 38.417; ρ = 1000 kg/m^3
Ambient Temperature：23.5 ℃; Liquid Temperature：22.5 ℃

DASY5 Configuration:
- Probe: EX3DV4 - SN3925; ConvF(7.19, 7.19, 7.19) @ 3500 MHz; Calibrated: 2021/4/23
- Sensor-Surface: 1.4mm (Mechanical Surface Detection)
- Electronics: DAE4 Sn778; Calibrated: 2021/5/21
- Phantom: ELI V5.0; Type: QD OVA 002 Ax; Serial: 1131
- Measurement SW: DASY52, Version 52.10 (4);SEMCAD X Version 14.6.14 (7483)

Pin=50mW/Area Scan (61x61x1): Interpolated grid: dx=1.200 mm, dy=1.200 mm
Maximum value of SAR (interpolated) = 6.72 W/kg

Pin=50mW/Zoom Scan (7x7x8)/Cube 0: Measurement grid: dx=5mm, dy=5mm, dz=1.4mm
Reference Value = 48.53 V/m; Power Drift = 0.05 dB
Peak SAR (extrapolated) = 8.57 W/kg
SAR(1 g) = 3.47 W/kg; SAR(10 g) = 1.33 W/kg
Maximum value of SAR (measured) = 6.59 W/kg

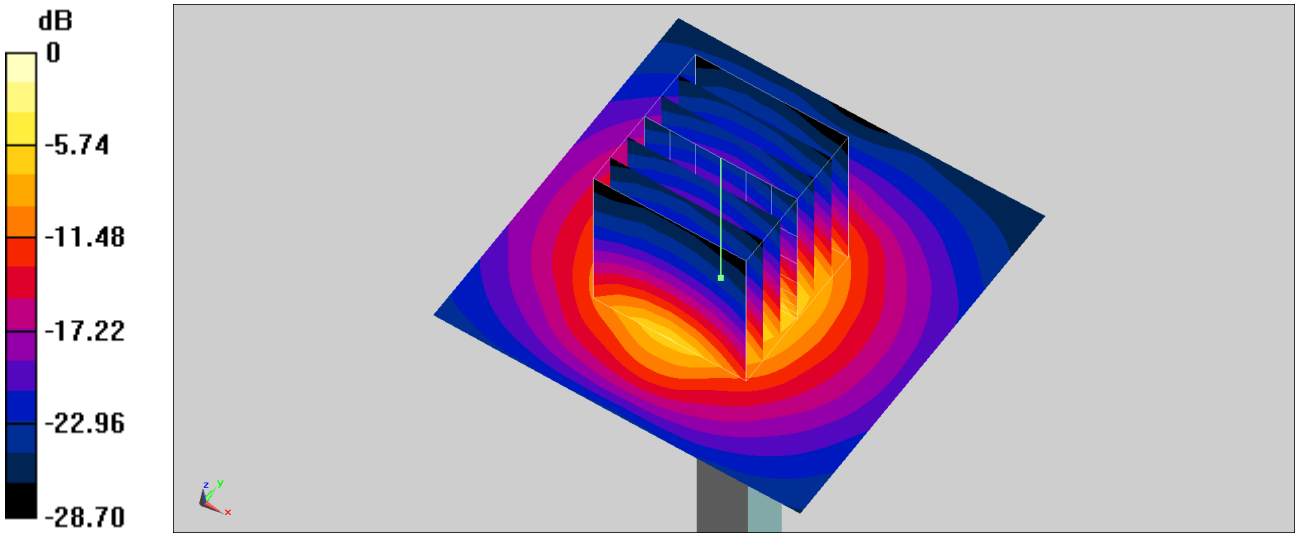

0 dB = 6.59 W/kg = 8.19 dBW/kg

System Check_Head_3500MHz

DUT: D3500V2-1014

Communication System: CW; Frequency: 3500 MHz;Duty Cycle: 1:1
Medium: HSL_3300~4200_220106 Medium parameters used: f = 3500 MHz; σ = 2.996 S/m; ε_r = 38.487; ρ = 1000 kg/m^3
Ambient Temperature：23.2 ℃; Liquid Temperature：22.2 ℃

DASY5 Configuration:
- Probe: EX3DV4 - SN3925; ConvF(7.19, 7.19, 7.19) @ 3500 MHz; Calibrated: 2021/4/23
- Sensor-Surface: 1.4mm (Mechanical Surface Detection)
- Electronics: DAE4 Sn778; Calibrated: 2021/5/21
- Phantom: ELI V5.0; Type: QD OVA 002 Ax; Serial: 1131
- Measurement SW: DASY52, Version 52.10 (4);SEMCAD X Version 14.6.14 (7483)

Pin=50mW/Area Scan (61x61x1): Interpolated grid: dx=1.200 mm, dy=1.200 mm
Maximum value of SAR (interpolated) = 6.45 W/kg

Pin=50mW/Zoom Scan (7x7x8)/Cube 0: Measurement grid: dx=5mm, dy=5mm, dz=1.4mm
Reference Value = 51.01 V/m; Power Drift = -0.11 dB
Peak SAR (extrapolated) = 9.19 W/kg
SAR(1 g) = 3.16 W/kg; SAR(10 g) = 1.17 W/kg
Maximum value of SAR (measured) = 6.41 W/kg

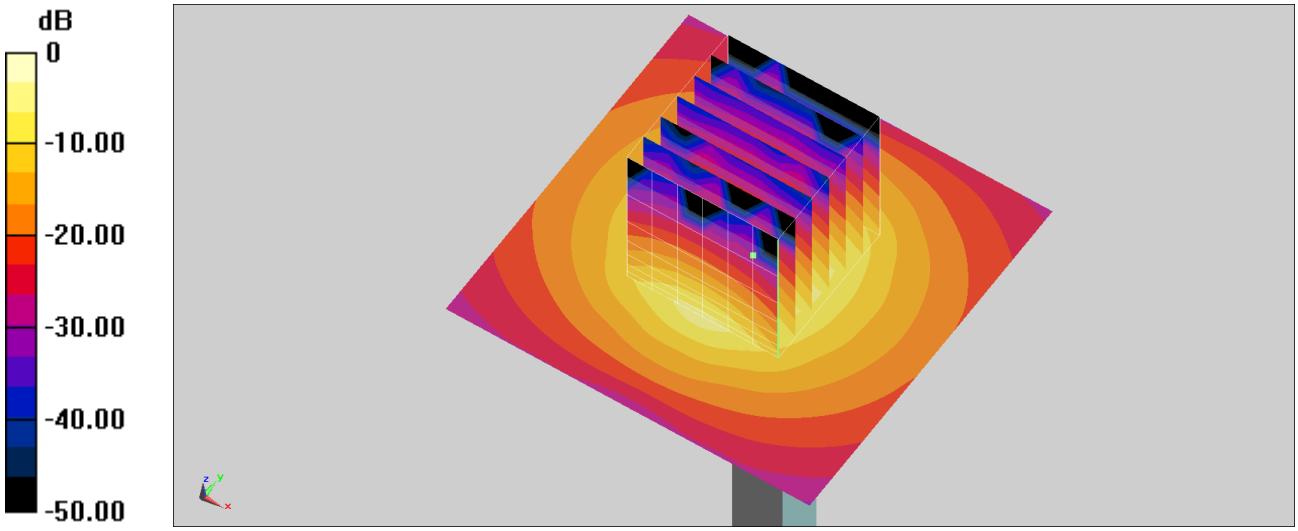

0 dB = 6.41 W/kg = 8.07 dBW/kg

System Check_Head_3700MHz

DUT: D3700V2-1006

Communication System: CW; Frequency: 3700 MHz;Duty Cycle: 1:1
Medium: HSL_3300-4200_211117 Medium parameters used: f = 3700 MHz; σ = 3.165 S/m; ε_r = 38.095; ρ = 1000 kg/m^3
Ambient Temperature：23.5 ℃; Liquid Temperature：22.5 ℃

DASY5 Configuration:
- Probe: EX3DV4 - SN3925; ConvF(7.01, 7.01, 7.01) @ 3700 MHz; Calibrated: 2021/4/23
- Sensor-Surface: 1.4mm (Mechanical Surface Detection)
- Electronics: DAE4 Sn778; Calibrated: 2021/5/21
- Phantom: ELI V5.0; Type: QD OVA 002 Ax; Serial: 1131
- Measurement SW: DASY52, Version 52.10 (4);SEMCAD X Version 14.6.14 (7483)

Pin=50mW/Area Scan (61x61x1): Interpolated grid: dx=1.200 mm, dy=1.200 mm
Maximum value of SAR (interpolated) = 6.49 W/kg

Pin=50mW/Zoom Scan (7x7x8)/Cube 0: Measurement grid: dx=5mm, dy=5mm, dz=1.4mm
Reference Value = 48.03 V/m; Power Drift = 0.06 dB
Peak SAR (extrapolated) = 9.16 W/kg
SAR(1 g) = 3.13 W/kg; SAR(10 g) = 1.12 W/kg
Maximum value of SAR (measured) = 6.53 W/kg

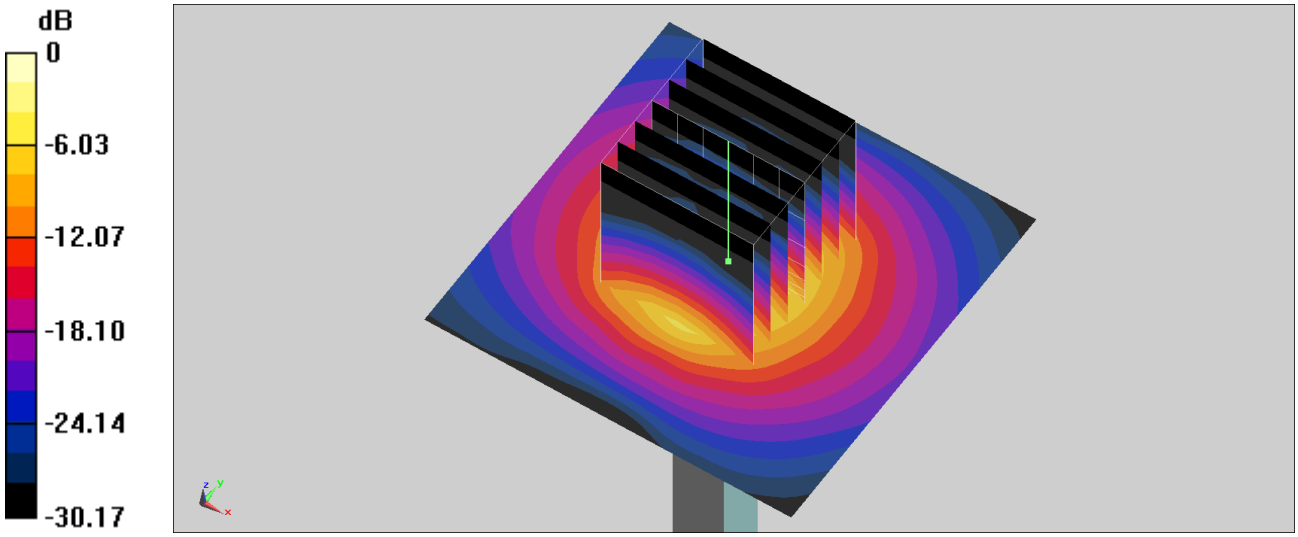

0 dB = 6.53 W/kg = 8.15 dBW/kg

System Check_Head_3700MHz

DUT: D3700V2-1006

Communication System: CW; Frequency: 3700 MHz;Duty Cycle: 1:1
Medium: HSL_3300~4200_220106 Medium parameters used: f = 3700 MHz; σ = 3.2 S/m; ε_r = 38.165; ρ = 1000 kg/m^3
Ambient Temperature：23.2 ℃; Liquid Temperature：22.2 ℃

DASY5 Configuration:
- Probe: EX3DV4 - SN3925; ConvF(7.01, 7.01, 7.01) @ 3700 MHz; Calibrated: 2021/4/23
- Sensor-Surface: 1.4mm (Mechanical Surface Detection)
- Electronics: DAE4 Sn778; Calibrated: 2021/5/21
- Phantom: ELI V5.0; Type: QD OVA 002 Ax; Serial: 1131
- Measurement SW: DASY52, Version 52.10 (4);SEMCAD X Version 14.6.14 (7483)

Pin=100mW/Area Scan (61x61x1): Interpolated grid: dx=1.200 mm, dy=1.200 mm
Maximum value of SAR (interpolated) = 14.1 W/kg

Pin=100mW/Zoom Scan (7x7x8)/Cube 0: Measurement grid: dx=5mm, dy=5mm, dz=1.4mm
Reference Value = 60.14 V/m; Power Drift = 0.19 dB
Peak SAR (extrapolated) = 19.5 W/kg
SAR(1 g) = 6.79 W/kg; SAR(10 g) = 2.45 W/kg
Maximum value of SAR (measured) = 14.0 W/kg

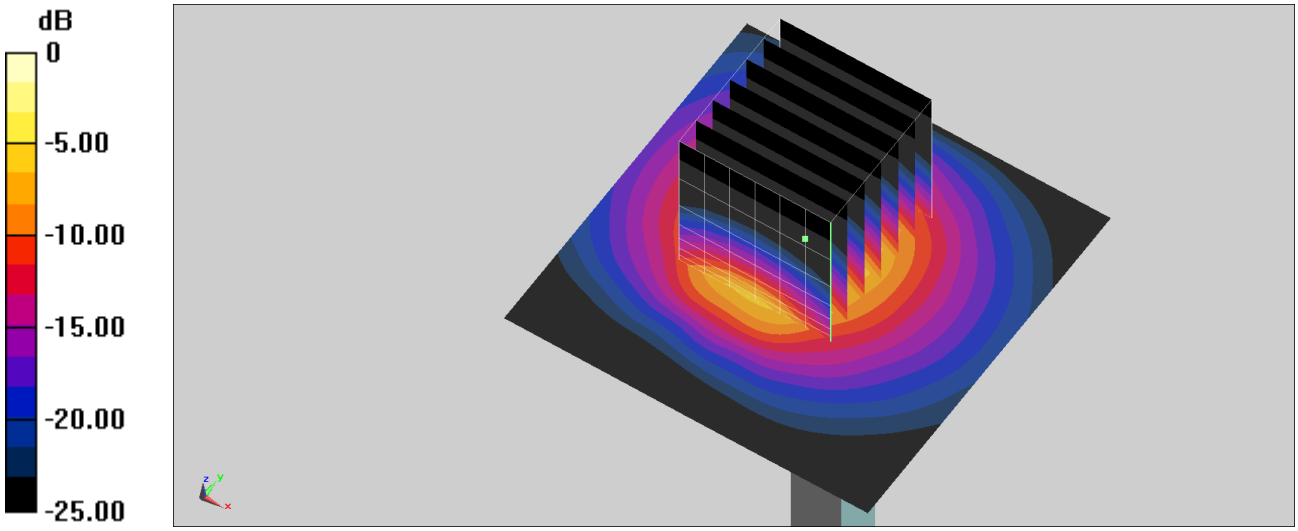

0 dB = 14.0 W/kg = 11.46 dBW/kg

System Check_Head_3900MHz

DUT: D3900V2-1017-3900

Communication System: CW; Frequency: 3900 MHz;Duty Cycle: 1:1
Medium: HSL_3300-4200_211117 Medium parameters used: f = 3900 MHz; σ = 3.395 S/m; ε_r = 37.887; ρ = 1000 kg/m^3
Ambient Temperature：23.5 ℃; Liquid Temperature：22.5 ℃

DASY5 Configuration:
- Probe: EX3DV4 - SN3925; ConvF(6.9, 6.9, 6.9) @ 3900 MHz; Calibrated: 2021/4/23
- Sensor-Surface: 1.4mm (Mechanical Surface Detection)
- Electronics: DAE4 Sn778; Calibrated: 2021/5/21
- Phantom: ELI V5.0; Type: QD OVA 002 Ax; Serial: 1131
- Measurement SW: DASY52, Version 52.10 (4);SEMCAD X Version 14.6.14 (7483)

Pin=100mW/Area Scan (71x71x1): Interpolated grid: dx=1.000 mm, dy=1.000 mm
Maximum value of SAR (interpolated) = 7.66 W/kg

Pin=100mW/Zoom Scan (7x7x7)/Cube 0: Measurement grid: dx=4mm, dy=4mm, dz=1.4mm
Reference Value = 49.82 V/m; Power Drift = 0.03 dB
Peak SAR (extrapolated) = 10.4 W/kg
SAR(1 g) = 3.65 W/kg; SAR(10 g) = 1.23 W/kg
Maximum value of SAR (measured) = 7.50 W/kg

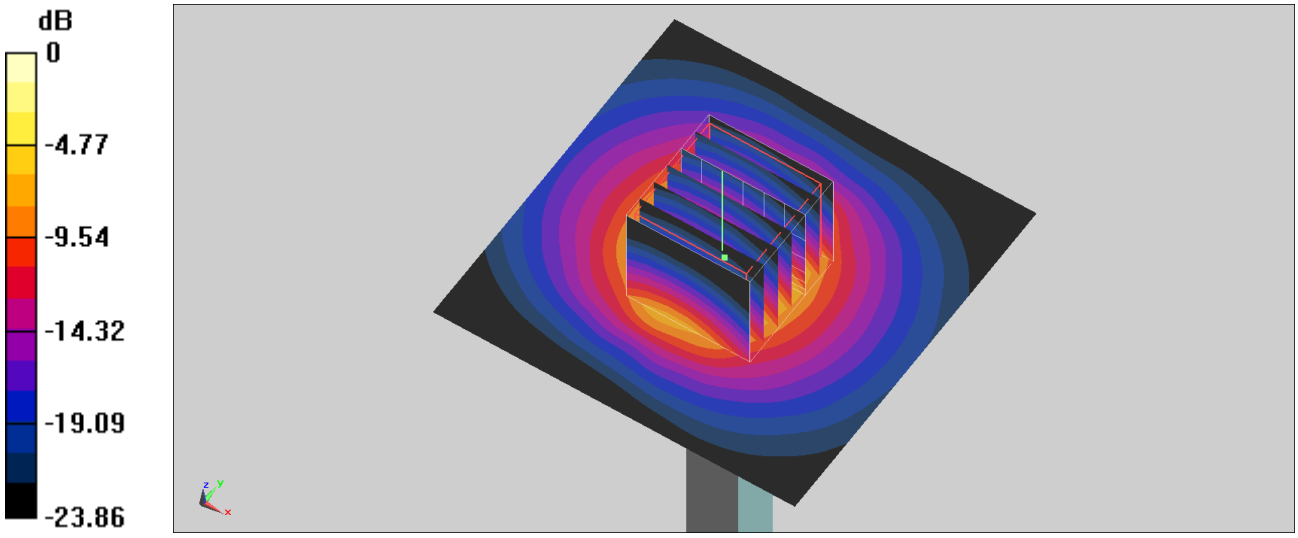

0 dB = 7.50 W/kg = 8.75 dBW/kg

System Check_Head_3900MHz

DUT: D3900V2-1017-3900

Communication System: CW; Frequency: 3900 MHz;Duty Cycle: 1:1
Medium: HSL_3300~4200_220106 Medium parameters used: f = 3900 MHz; σ = 3.428 S/m; ε_r = 38.117; ρ = 1000 kg/m^3
Ambient Temperature：23.2 ℃; Liquid Temperature：22.2 ℃

DASY5 Configuration:
- Probe: EX3DV4 - SN3925; ConvF(6.9, 6.9, 6.9) @ 3900 MHz; Calibrated: 2021/4/23
- Sensor-Surface: 1.4mm (Mechanical Surface Detection)
- Electronics: DAE4 Sn778; Calibrated: 2021/5/21
- Phantom: ELI V5.0; Type: QD OVA 002 Ax; Serial: 1131
- Measurement SW: DASY52, Version 52.10 (4);SEMCAD X Version 14.6.14 (7483)

Pin=50mW/Area Scan (61x61x1): Interpolated grid: dx=1.200 mm, dy=1.200 mm
Maximum value of SAR (interpolated) = 6.83 W/kg

Pin=50mW/Zoom Scan (7x7x8)/Cube 0: Measurement grid: dx=5mm, dy=5mm, dz=1.4mm
Reference Value = 48.07 V/m; Power Drift = -0.09 dB
Peak SAR (extrapolated) = 9.11 W/kg
SAR(1 g) = 3.41 W/kg; SAR(10 g) = 1.21 W/kg
Maximum value of SAR (measured) = 6.83 W/kg

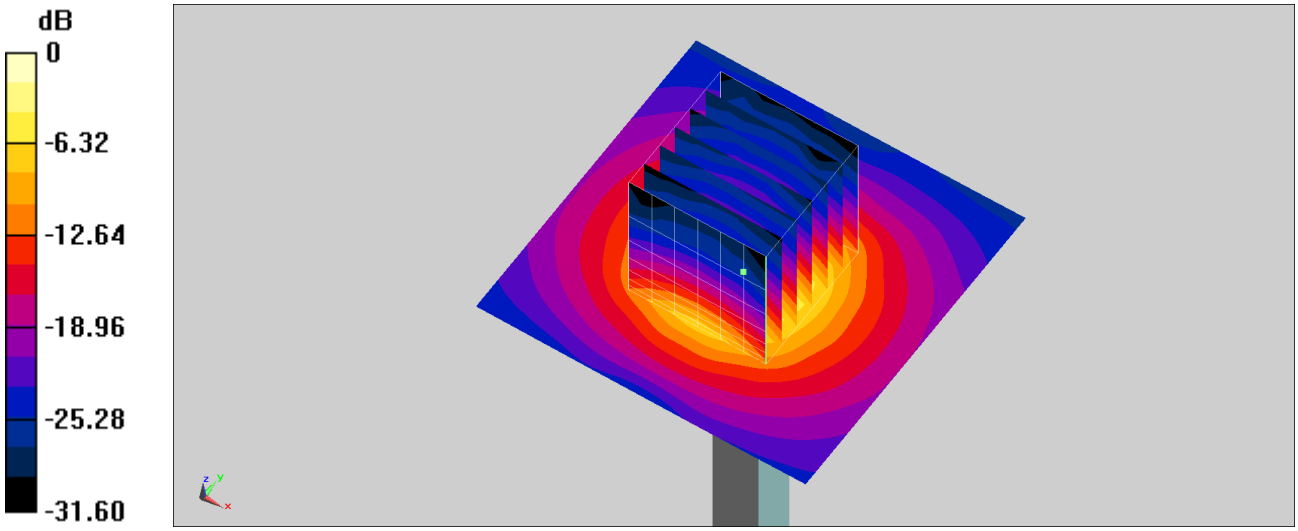

0 dB = 6.83 W/kg = 8.34 dBW/kg