Radiation characteristic in 3400MHz ~ 3600MHz (FCC Part 96 LTE Band 42)

Main antenna: 3400.00 MHz

3400.00 MHz		
Horizontal Peak (dBi)	-0.7	290deg
Vertical Peak(dBi)	-7.1	290deg

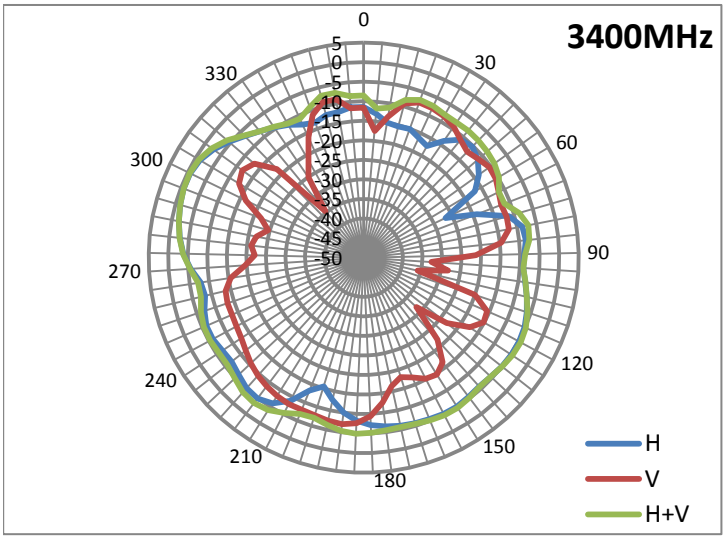

Main antenna: 3500.00 MHz

3500.00 MHz		
Horizontal Peak (dBi)	0.8	290deg
Vertical Peak(dBi)	-8.9	225deg

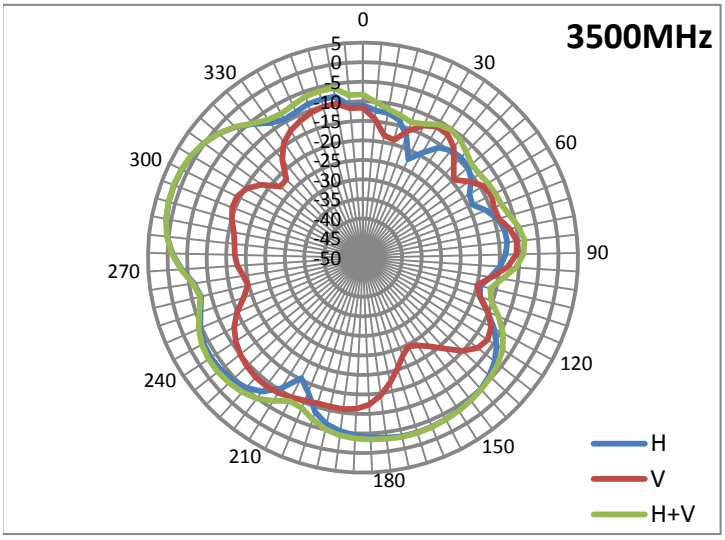

Main antenna: 3600.00 MHz

3600.00 MHz		
Horizontal Peak (dBi)	0.3	290deg
Vertical Peak(dBi)	-6.2	225deg

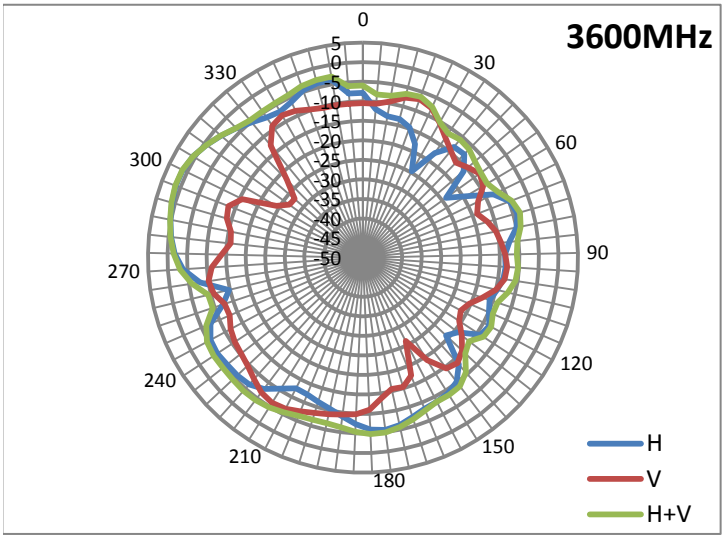

Radiation characteristic in 3600MHz ~ 3800MHz (LTE Band 43)

Main antenna: 3600.00 MHz

3600.00 MHz		
Horizontal Peak (dBi)	0.3	290deg
Vertical Peak(dBi)	-6.2	225deg

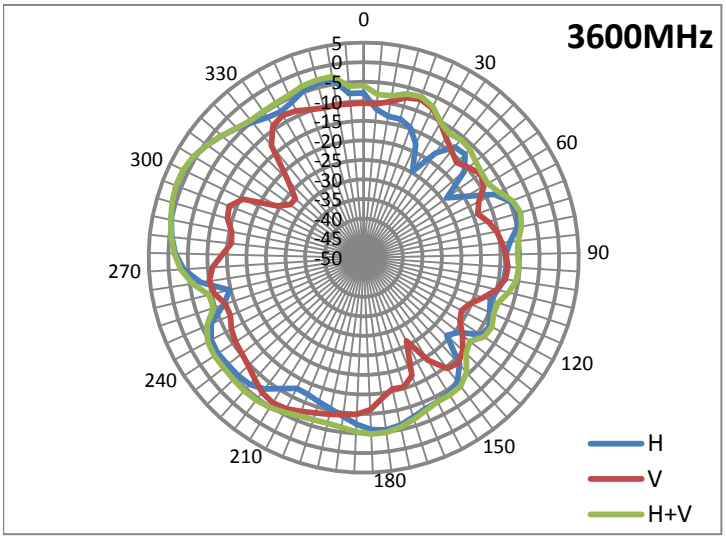

Main antenna: 3700.00 MHz

3700.00 MHz		
Horizontal Peak (dBi)	0.5	295deg
Vertical Peak(dBi)	-4.3	225deg

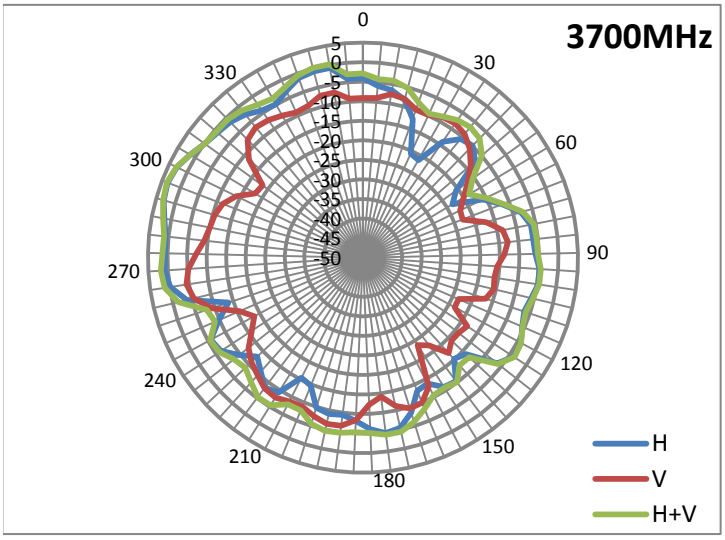

Main antenna: 3800.00 MHz

3800.00 MHz		
Horizontal Peak (dBi)	0.2	290deg
Vertical Peak(dBi)	-5.3	220deg

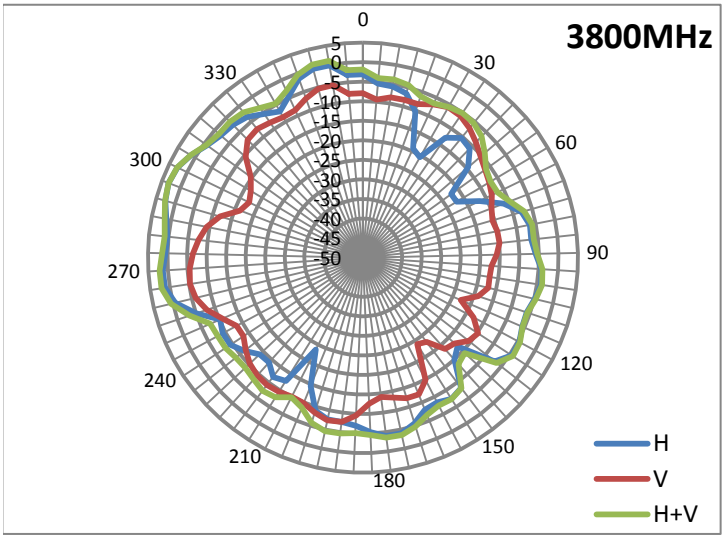

Radiation characteristic in 5150MHz ~ 5925MHz (FCC Part 15, 90, 95 LTE Band 46)

*** TD Unlicensed, LAA RCV only**

Main antenna: 5150.00 MHz

5150.00 MHz		
Horizontal Peak (dBi)	-3.0	15deg
Vertical Peak(dBi)	-3.8	200deg

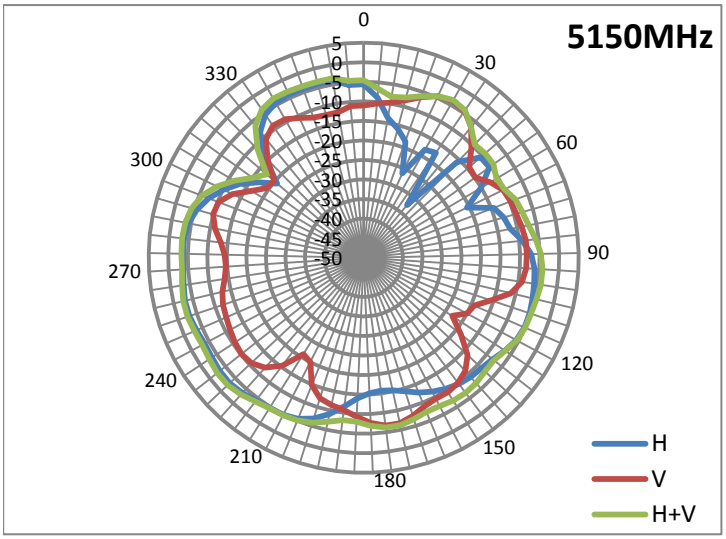

Main antenna: 5537.00 MHz

5537.00 MHz		
Horizontal Peak (dBi)	0.3	15deg
Vertical Peak(dBi)	-3.7	195deg

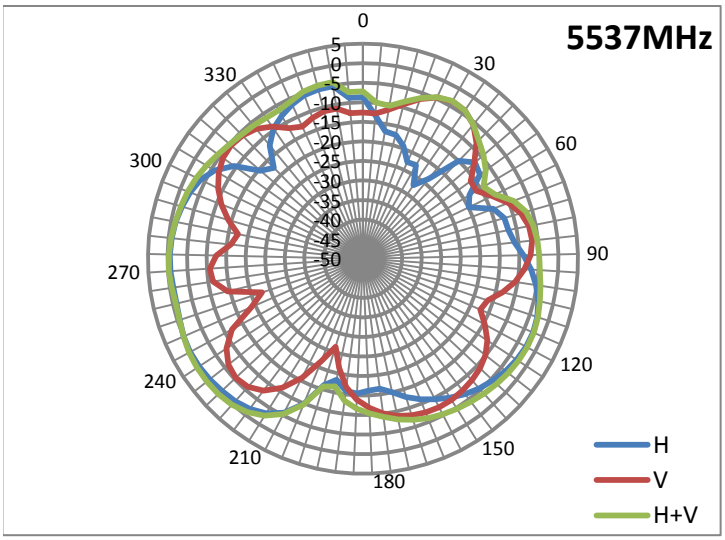

Main antenna: 5925.00 MHz

5925.00 MHz		
Horizontal Peak (dBi)	-0.9	295deg
Vertical Peak(dBi)	-3.1	180deg

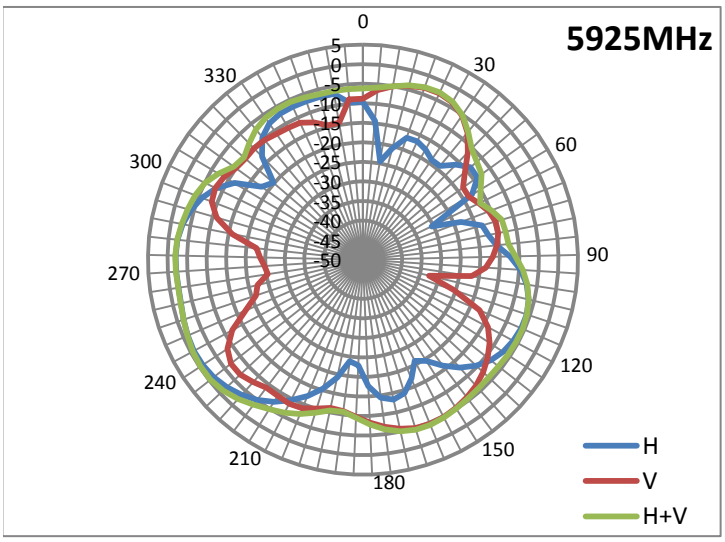

Radiation characteristic in 5150MHz ~ 5925MHz (FCC Part 96, LTE Band 48)

Main antenna: 3550.00 MHz

3550.00 MHz		
Horizontal Peak (dBi)	0.2	290deg
Vertical Peak(dBi)	-7.4	225deg

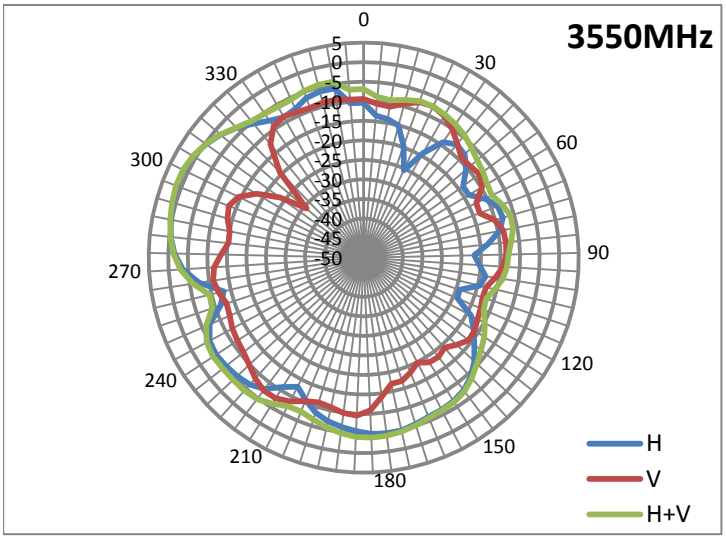

Main antenna: 3625.00 MHz

3625.00 MHz		
Horizontal Peak (dBi)	0.5	290deg
Vertical Peak(dBi)	-5.5	215deg

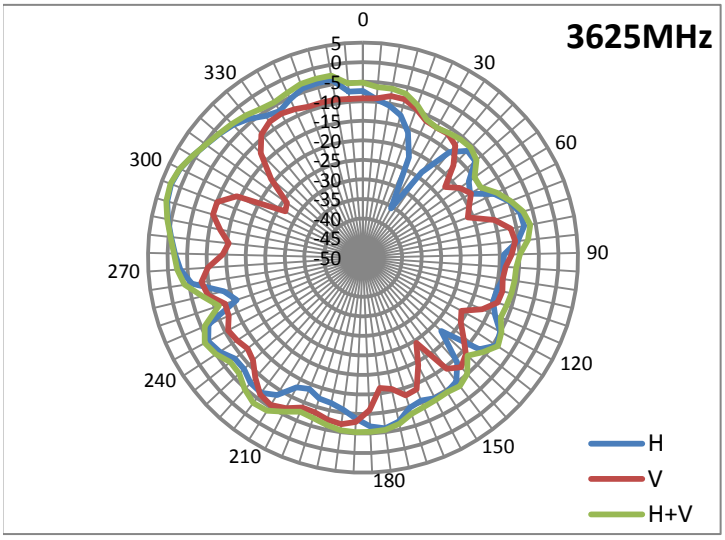

Main antenna: 3700.00 MHz

3700.00 MHz		
Horizontal Peak (dBi)	0.5	290deg
Vertical Peak(dBi)	-4.3	225deg

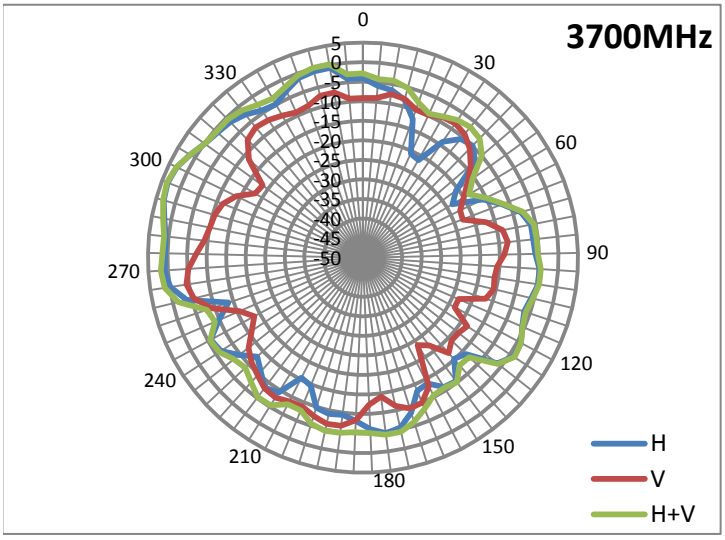

Radiation characteristic in 1710MHz ~ 1780MHz (FCC Part 27 LTE, Band 66, n66)

Main antenna: 1710.00 MHz

1710.00 MHz		
Horizontal Peak (dBi)	-0.7	300deg
Vertical Peak(dBi)	-5.4	130deg

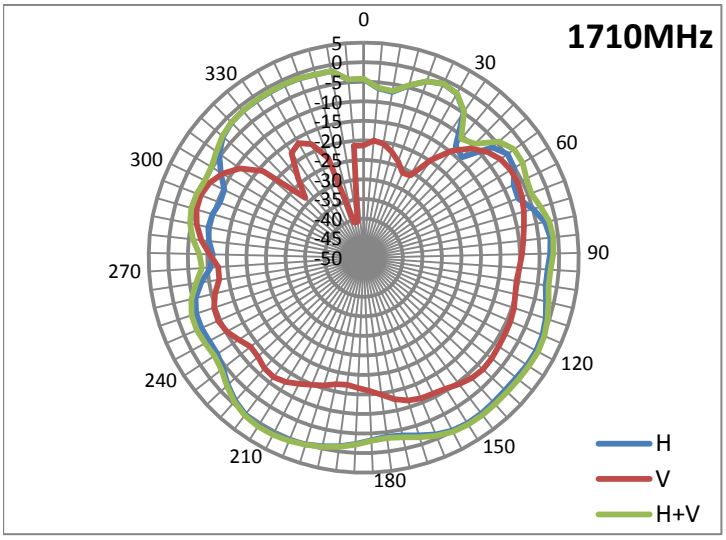

Main antenna: 1745.00 MHz

1745.00 MHz		
Horizontal Peak (dBi)	-0.8	300deg
Vertical Peak(dBi)	-6	150deg

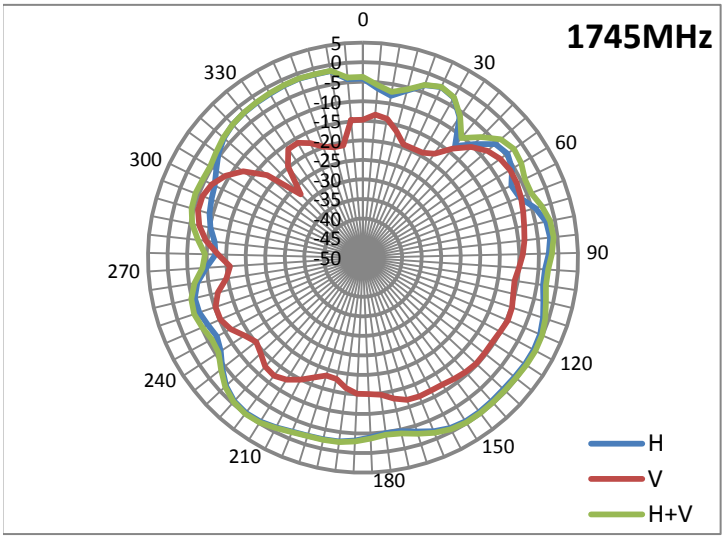

Main antenna: 1780.00 MHz

1780.00 MHz		
Horizontal Peak (dBi)	-0.7	295deg
Vertical Peak(dBi)	-7.3	145deg

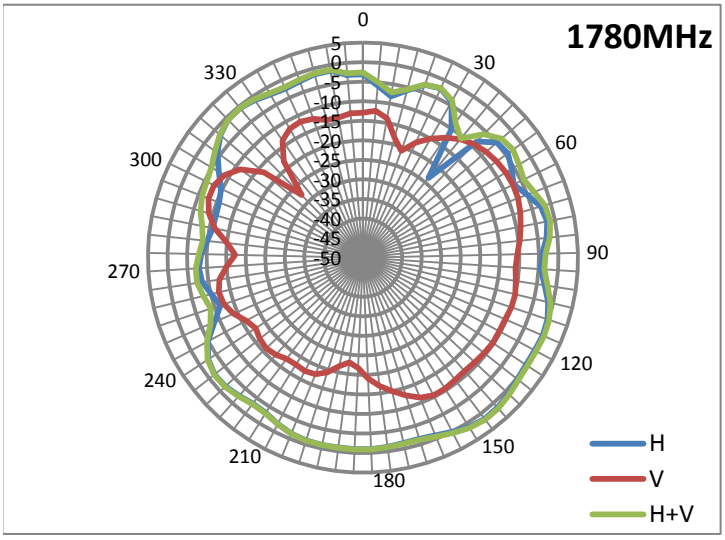

Radiation characteristic in 663MHz ~ 698MHz (FCC Part 24, 27 LTE, Band 71, n71)

Main antenna: 663.00 MHz

663.00 MHz		
Horizontal Peak (dBi)	-2.7	130deg
Vertical Peak(dBi)	-5.4	345deg

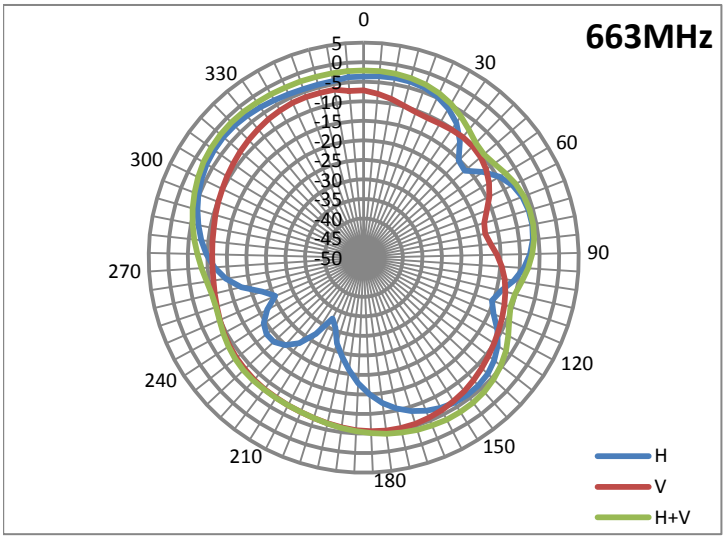

Main antenna: 680.50 MHz

680.50 MHz		
Horizontal Peak (dBi)	-3.3	130deg
Vertical Peak(dBi)	-7.0	310deg

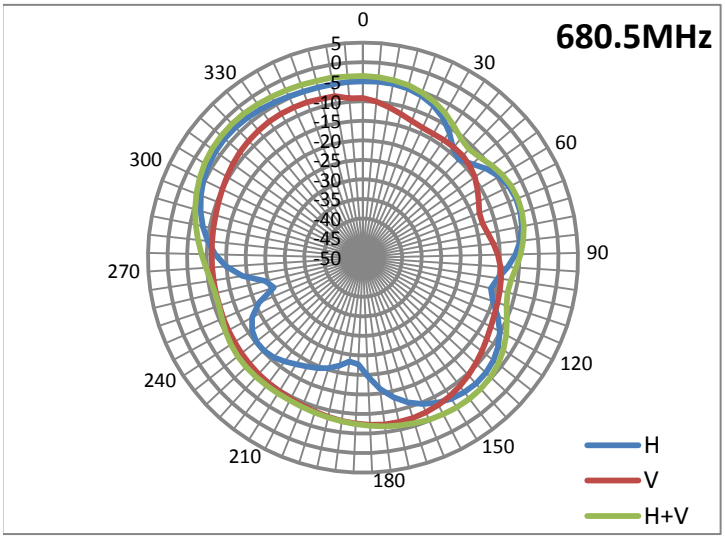

Main antenna: 698.00 MHz

698.00 MHz		
Horizontal Peak (dBi)	-3.5	270deg
Vertical Peak(dBi)	-5.6	315deg

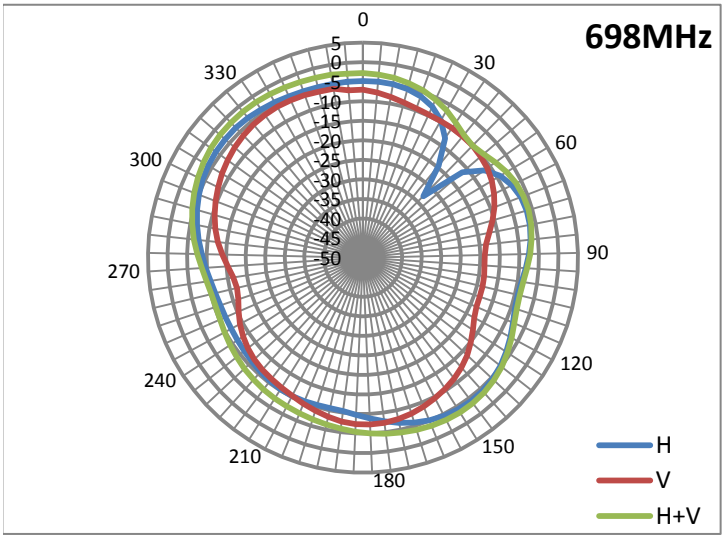

Radiation characteristic in 3300MHz ~ 4200MHz (FCC/EU/CN/JP 5G NR Band 77)

Main antenna: 3300.00 MHz

3300.00 MHz		
Horizontal Peak (dBi)	-0.3	290deg
Vertical Peak(dBi)	-7.3	250deg

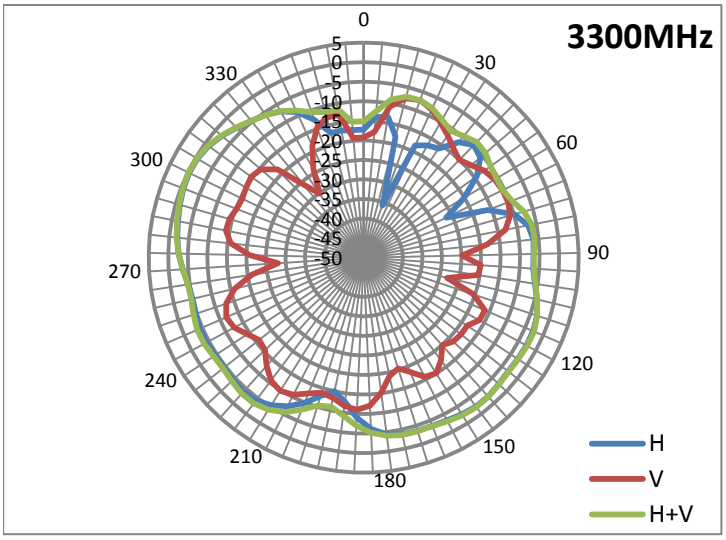

Main antenna: 3750.00 MHz

3750.00 MHz		
Horizontal Peak (dBi)	0.9	290deg
Vertical Peak(dBi)	-4.8	215deg

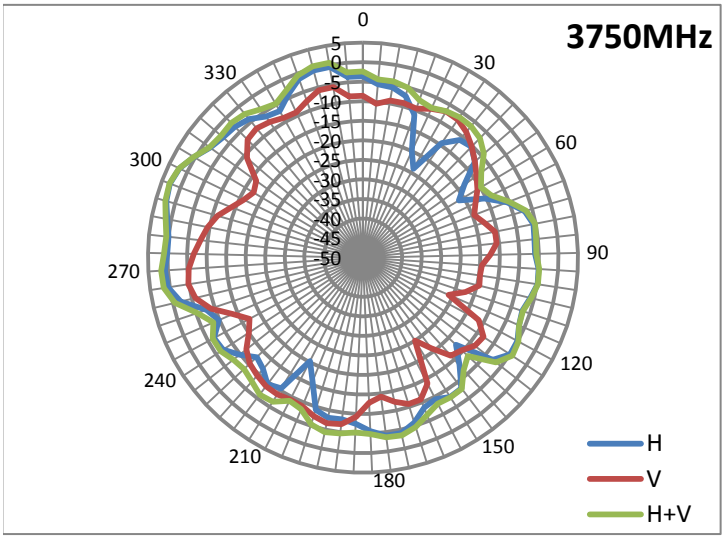

Main antenna: 4200.00 MHz

4200.00 MHz		
Horizontal Peak (dBi)	0.2	295deg
Vertical Peak(dBi)	-5.2	180deg

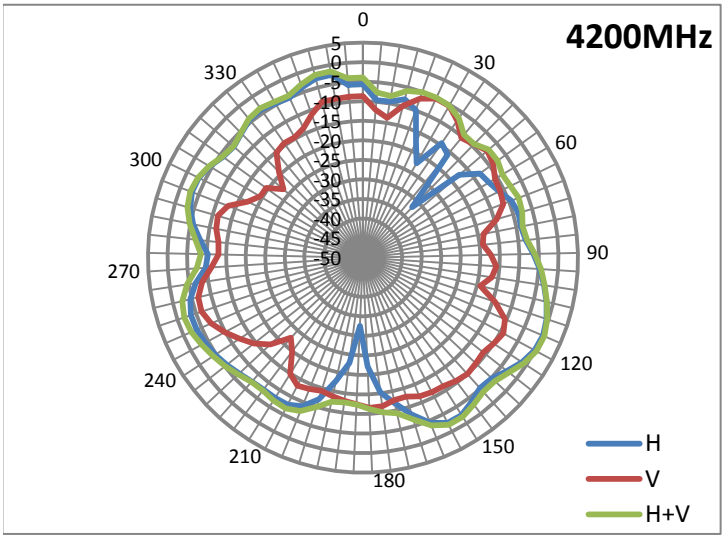

Radiation characteristic in 3300MHz ~ 3800MHz (EU/CN/JP 5G NR Band 78)

Main antenna: 3300.00 MHz

3300.00 MHz		
Horizontal Peak (dBi)	-0.3	290deg
Vertical Peak(dBi)	-7.3	250deg

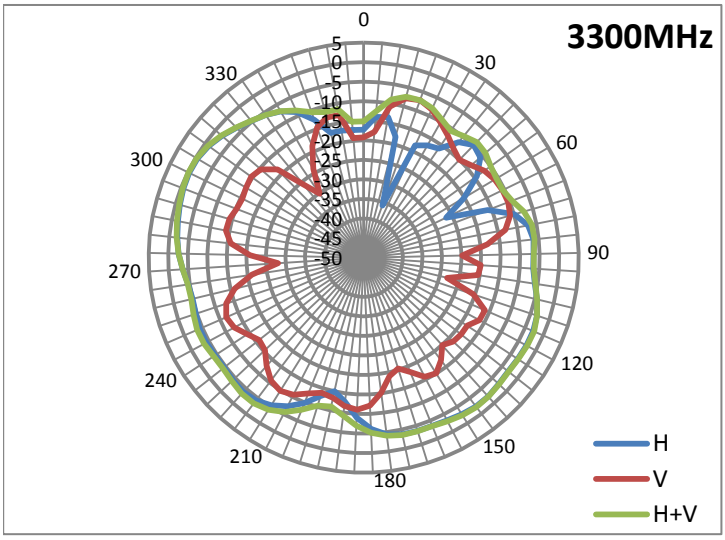

Main antenna: 3550.00 MHz

3550.00 MHz		
Horizontal Peak (dBi)	0.2	290deg
Vertical Peak(dBi)	-7.4	225deg

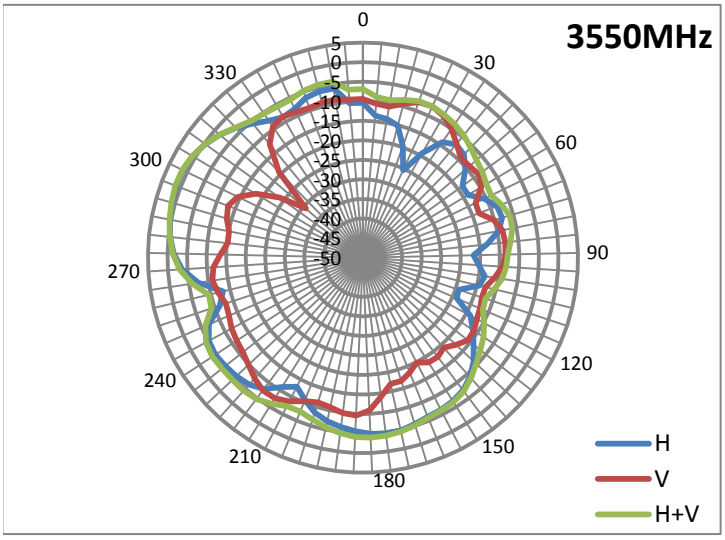

Main antenna: 3800.00 MHz

3800.00 MHz		
Horizontal Peak (dBi)	0.2	290deg
Vertical Peak(dBi)	-5.3	220deg

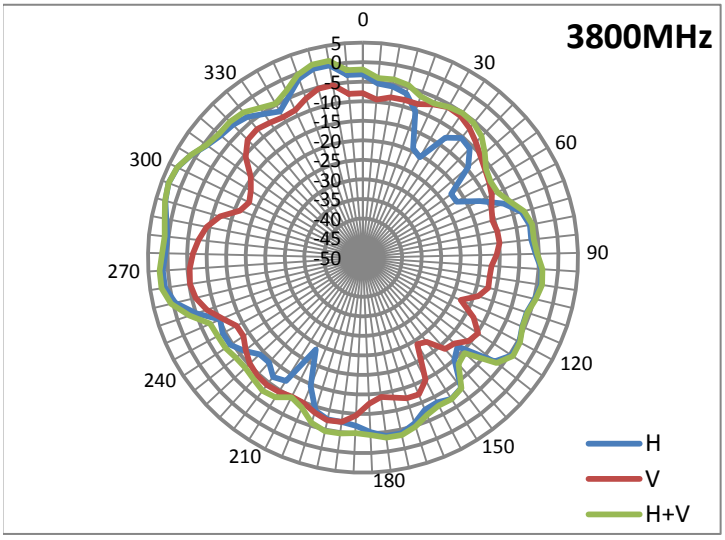

Radiation characteristic in 4400MHz ~ 5000MHz (CN/JP 5G NR Band 79)

Main antenna: 4400.00 MHz

4400.00 MHz		
Horizontal Peak (dBi)	-3.6	15deg
Vertical Peak(dBi)	-6.1	180deg

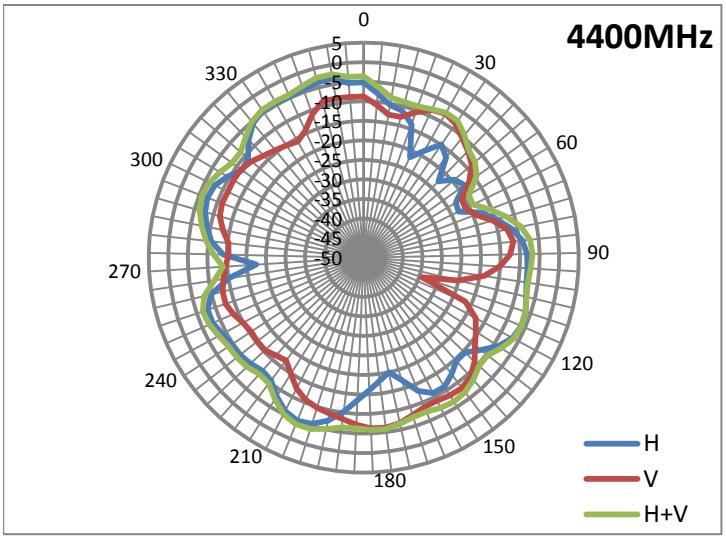

Main antenna: 4700.00 MHz

4700.00 MHz		
Horizontal Peak (dBi)	-1.2	20deg
Vertical Peak(dBi)	-6.3	180deg

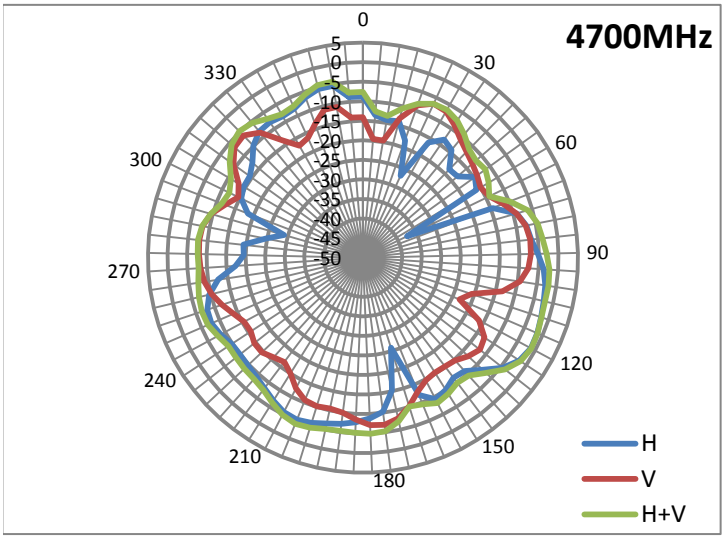

Main antenna: 5000.00 MHz

5000.00 MHz		
Horizontal Peak (dBi)	-1.6	15deg
Vertical Peak(dBi)	-3.0	180deg

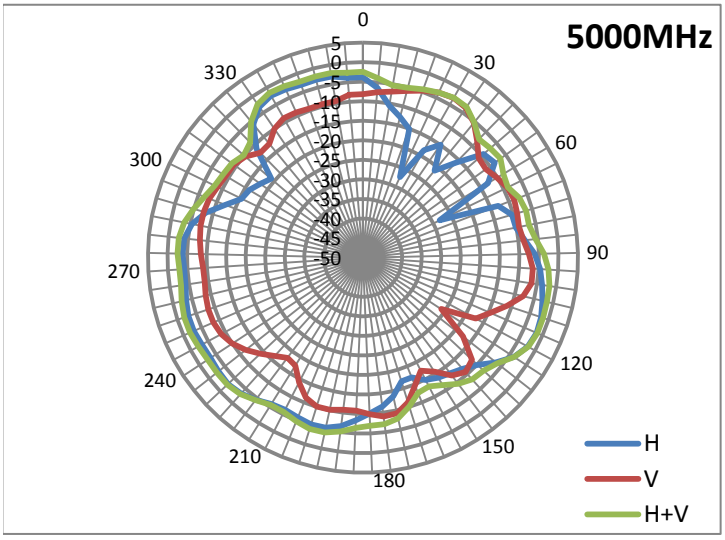

Radiation characteristic in 1447.9MHz ~ 1462.9MHz (Japan, Band 21)

Main antenna: 1447.90 MHz

1447.90 MHz		
Horizontal Peak (dBi)	-0.4	300deg
Vertical Peak(dBi)	-6.3	135deg

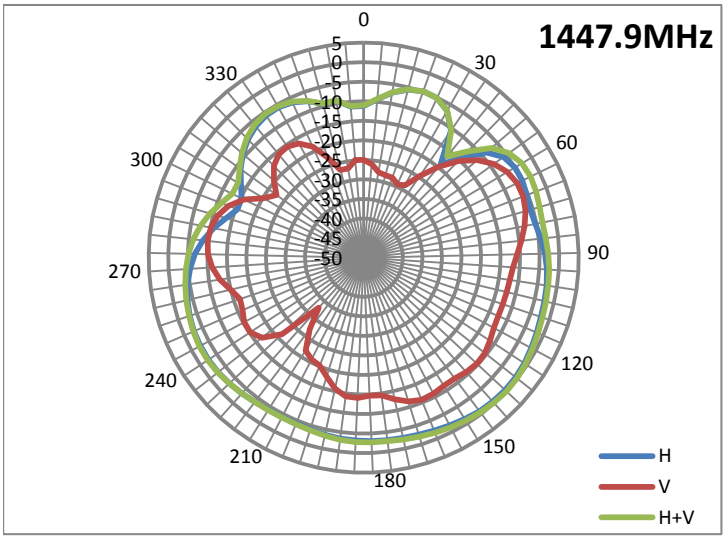

Main antenna: 1455.40 MHz

1455.40 MHz		
Horizontal Peak (dBi)	-0.1	295deg
Vertical Peak(dBi)	-6.8	135deg

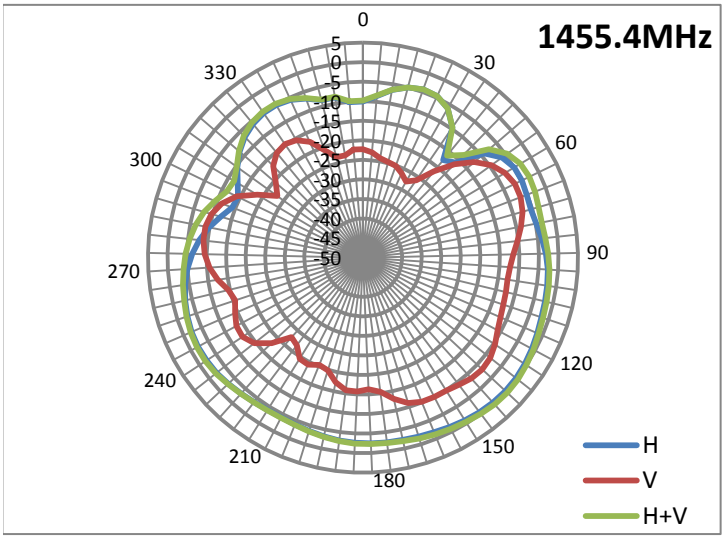

Main antenna: 1462.90 MHz

1462.90 MHz		
Horizontal Peak (dBi)	-0.1	295deg
Vertical Peak(dBi)	-7.2	135deg

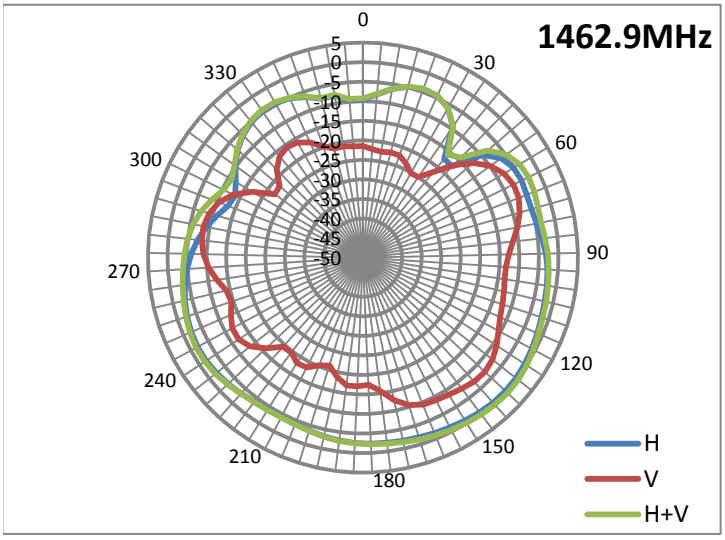

Radiation characteristic in 815MHz ~ 940MHz (Japan: J-CDMA)

Main antenna: 815 MHz

815 MHz		
Horizontal Peak (dBi)	-1.0	270deg
Vertical Peak(dBi)	-7.4	345deg

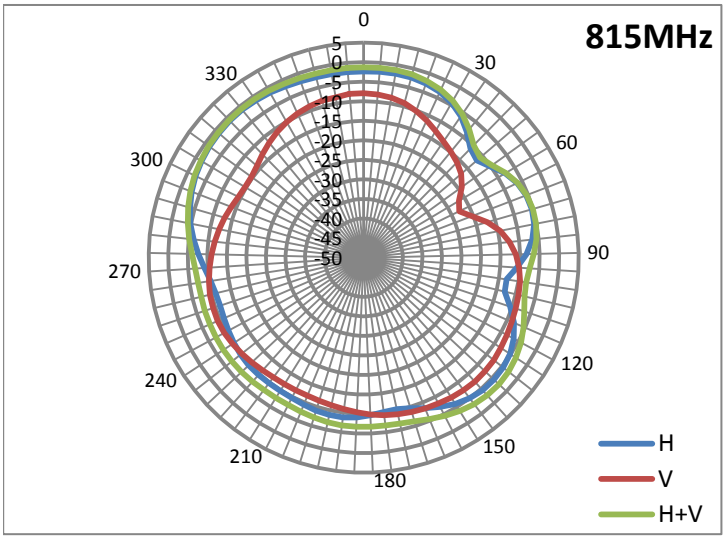

Main antenna: 824.70 MHz

824.70 MHz		
Horizontal Peak (dBi)	-1.4	275deg
Vertical Peak(dBi)	-8.7	345deg

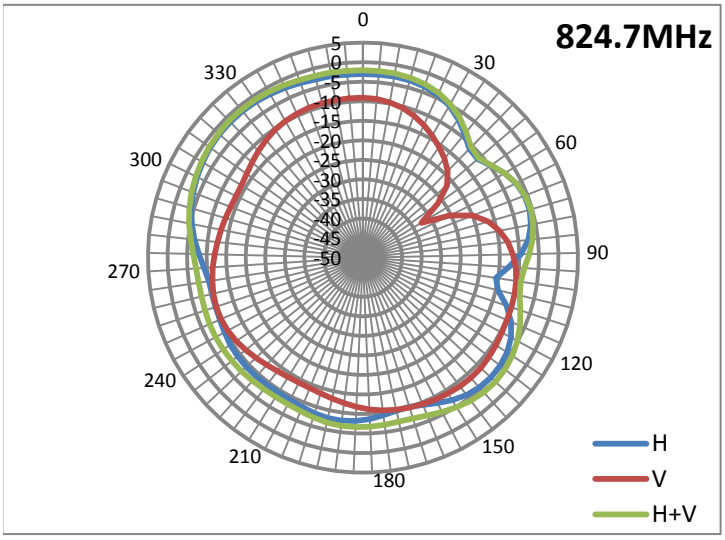

Main antenna: 836.52 MHz

836.52 MHz		
Horizontal Peak (dBi)	0.1	280deg
Vertical Peak(dBi)	-8.5	185deg

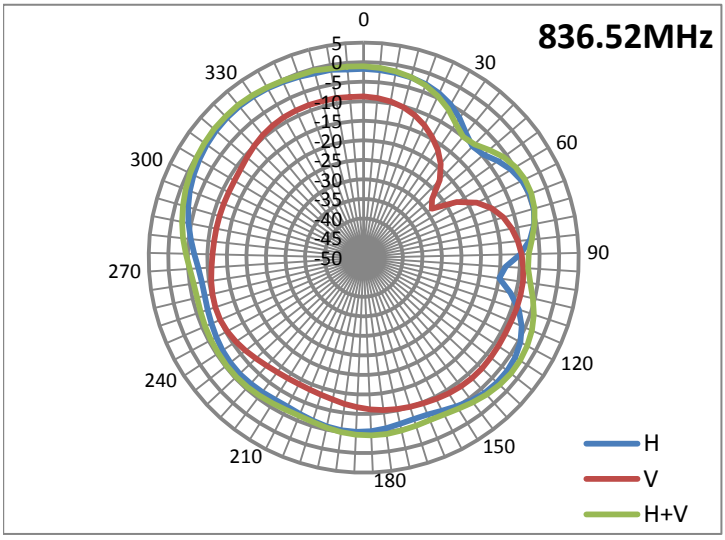

Main antenna: 848.31 MHz

848.31 MHz		
Horizontal Peak (dBi)	-0.2	285deg
Vertical Peak(dBi)	-9.0	240deg

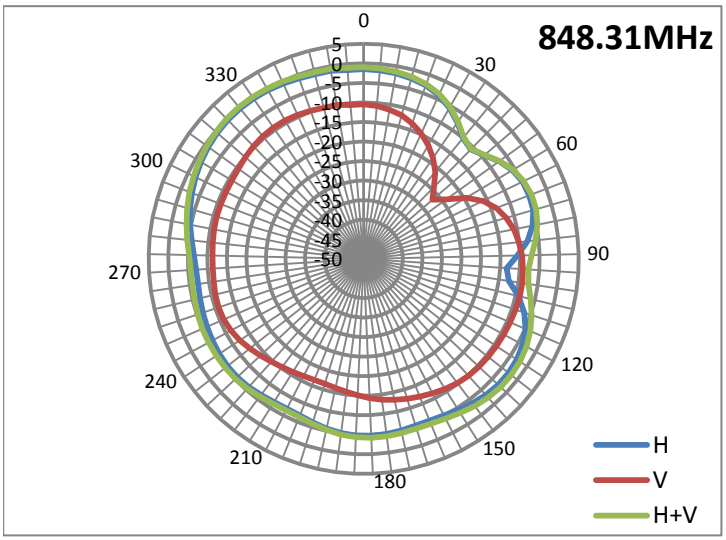

Main antenna: 870 MHz

870 MHz		
Horizontal Peak (dBi)	-0.9	345deg
Vertical Peak(dBi)	-9.4	290deg

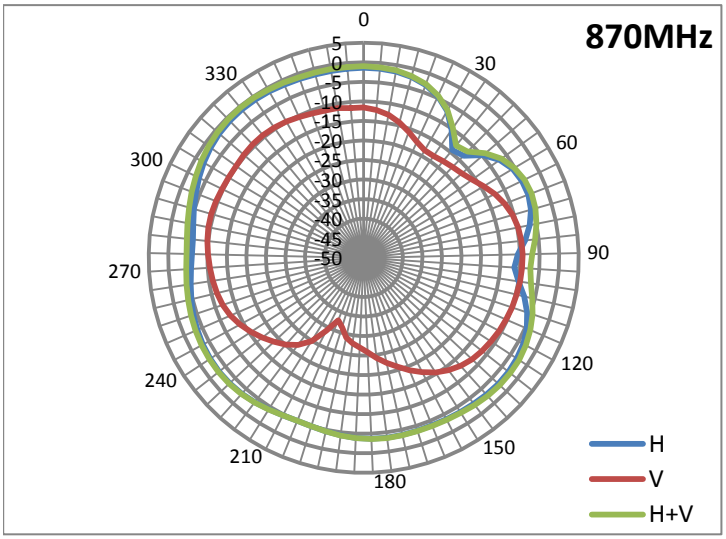

Main antenna: 880.2 MHz

880.2 MHz		
Horizontal Peak (dBi)	-2.4	275deg
Vertical Peak(dBi)	-9.1	295deg

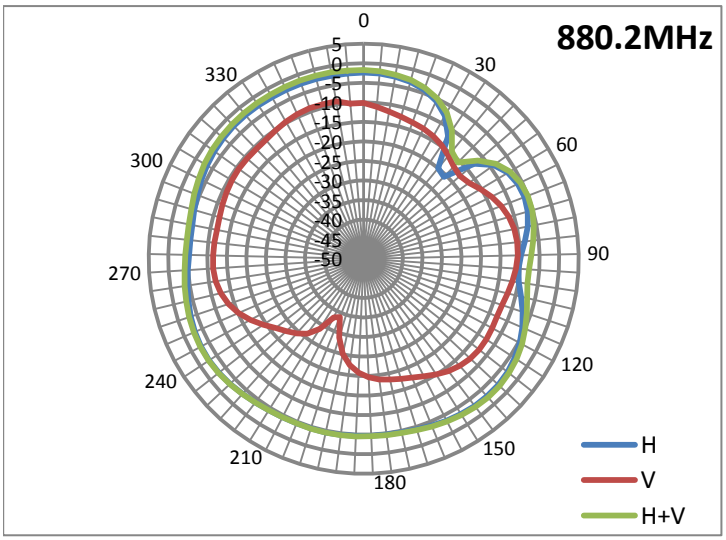

Main antenna: 897.6 MHz

897.6 MHz		
Horizontal Peak (dBi)	-2.2	290deg
Vertical Peak(dBi)	-8.9	295deg

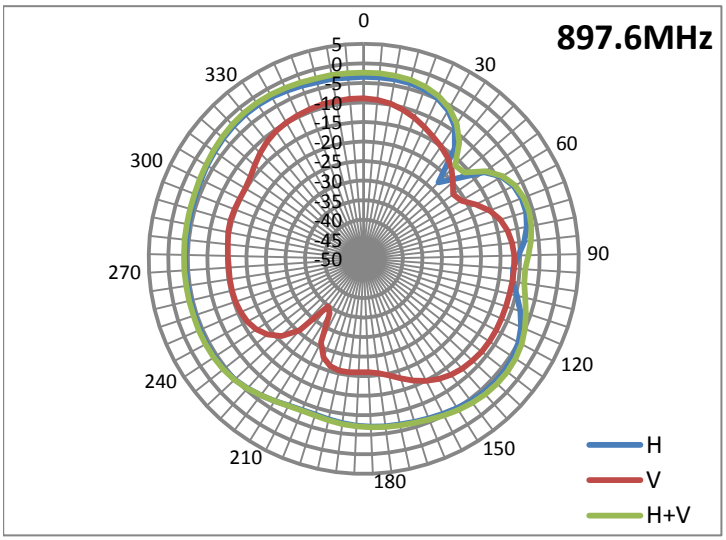

Main antenna: 914.8 MHz

914.8 MHz		
Horizontal Peak (dBi)	-1.5	320deg
Vertical Peak(dBi)	-8.5	295deg

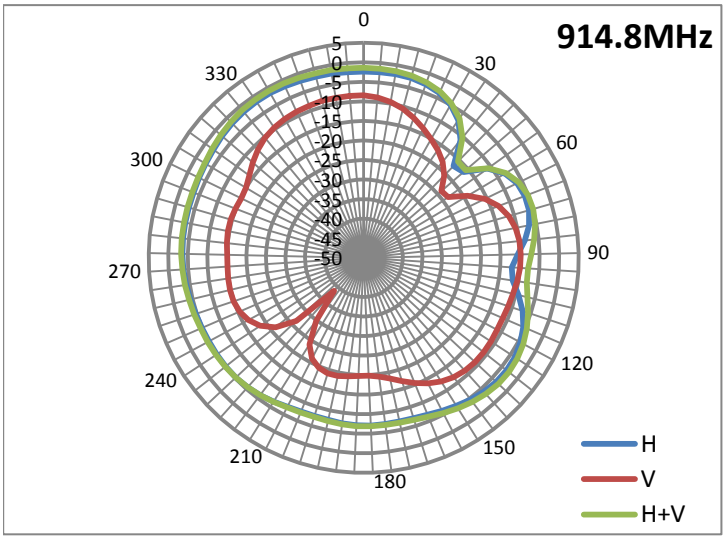

Main antenna: 925 MHz

925 MHz		
Horizontal Peak (dBi)	-2.0	315deg
Vertical Peak(dBi)	-9.3	290deg

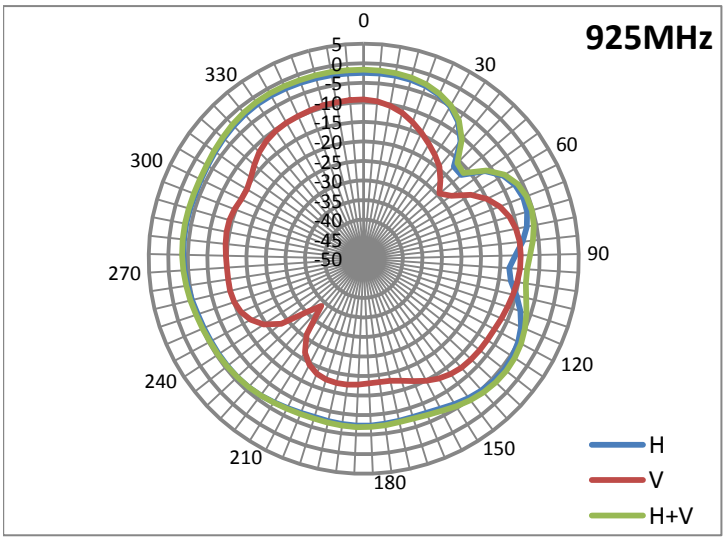

Main antenna: 940 MHz

940 MHz		
Horizontal Peak (dBi)	**-1.7**	**305deg**
Vertical Peak(dBi)	**-9.2**	**275deg**

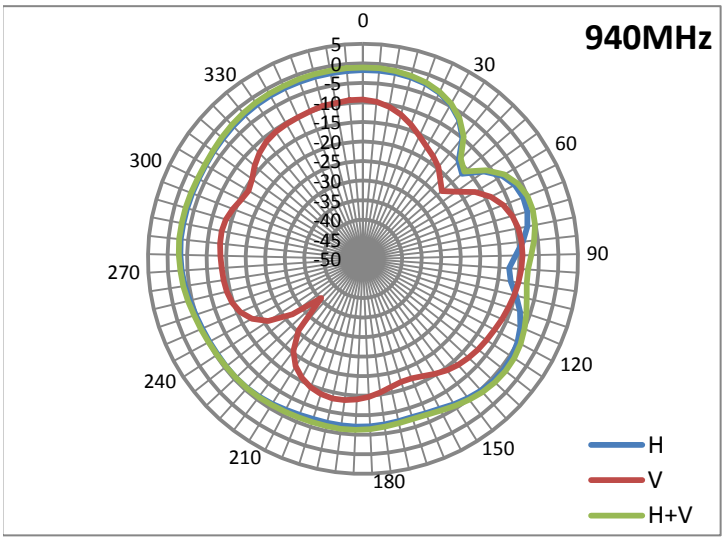

Radiation characteristic in 1920MHz ~ 1980MHz (EU/ANZ/CN/JP: UMTS/HSDPA, Band 1, n1)

MIMO antenna: 1920.00 MHz

1920.00 MHz		
Horizontal Peak (dBi)	-2.1	330deg
Vertical Peak(dBi)	-2.2	125deg

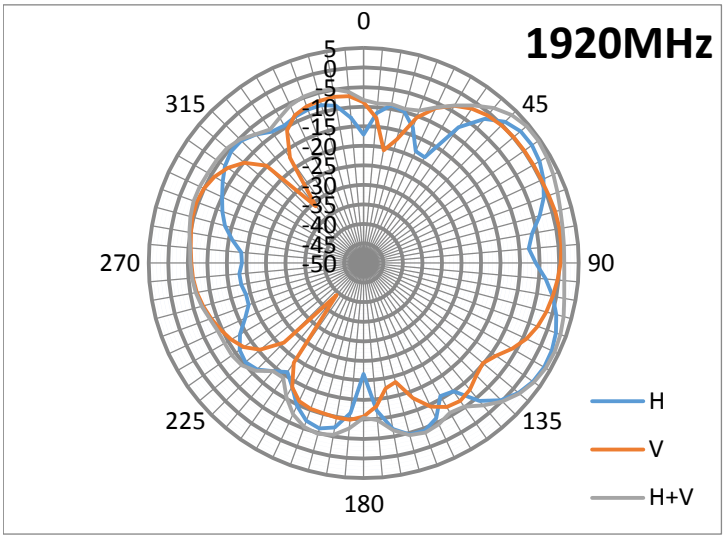

MIMO antenna: 1950.00 MHz

1950.00 MHz		
Horizontal Peak (dBi)	-2.4	330deg
Vertical Peak(dBi)	-2.2	125deg

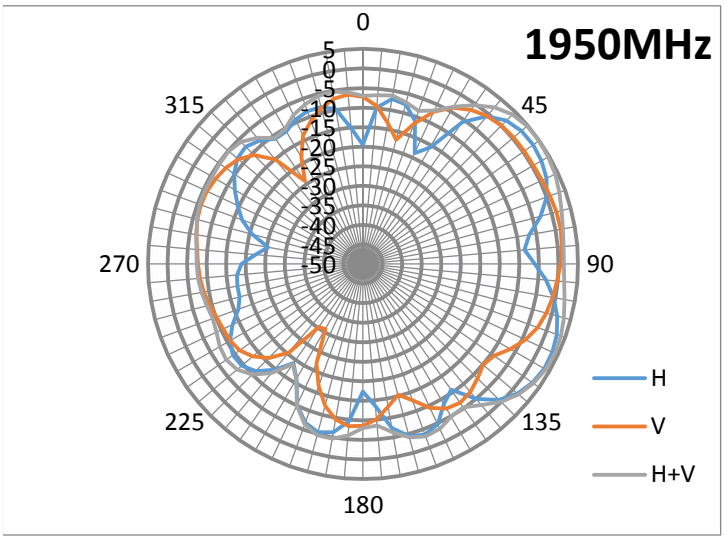

MIMO antenna: 1980.00 MHz

1980.00 MHz		
Horizontal Peak (dBi)	-2.6	335deg
Vertical Peak(dBi)	-1.7	125deg

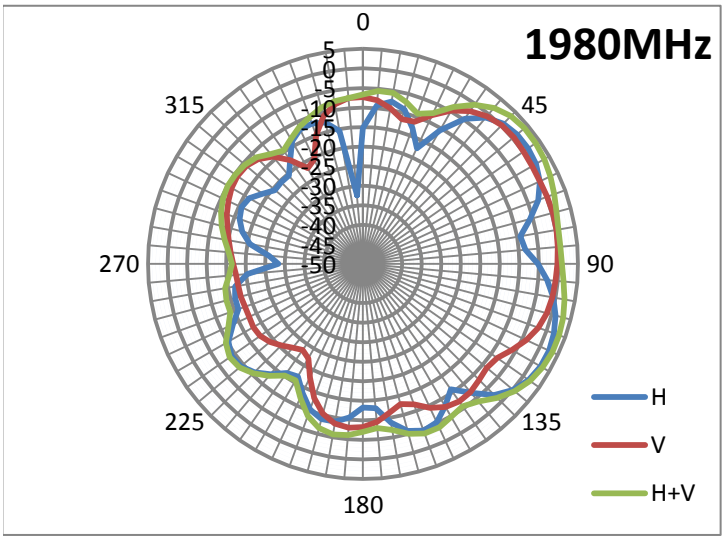

Radiation characteristic in 1850MHz ~ 1910MHz (FCC Part 24 PCS, Band 2, n2)

MIMO antenna: 1850.00 MHz

1850.00 MHz		
Horizontal Peak (dBi)	-1.8	330deg
Vertical Peak(dBi)	-0.9	140deg

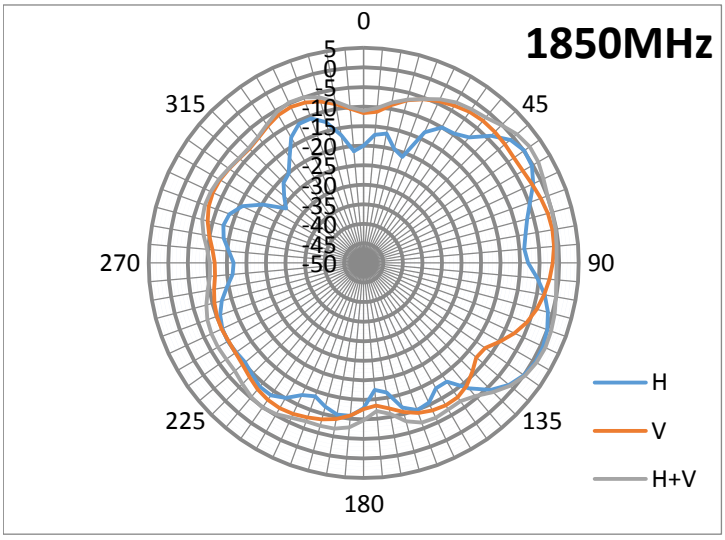

MIMO antenna: 1880.00 MHz

1880.00 MHz		
Horizontal Peak (dBi)	-0.2	330deg
Vertical Peak(dBi)	-1.0	135deg

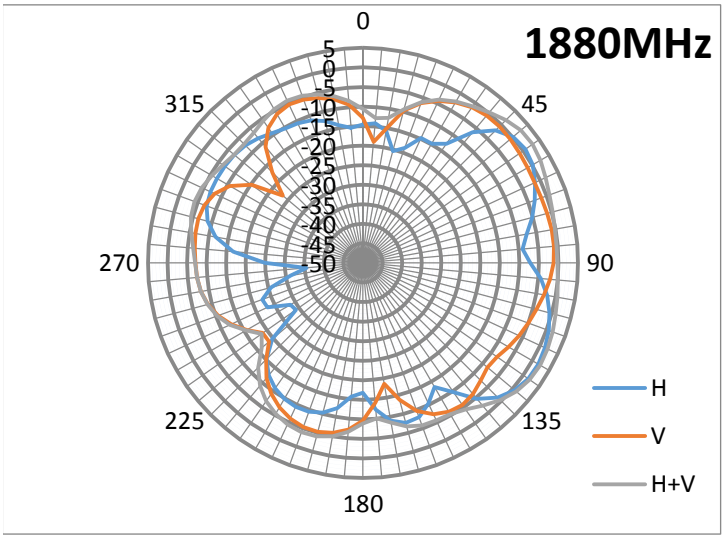

MIMO antenna: 1910.00 MHz

1910.00 MHz		
Horizontal Peak (dBi)	-0.9	330deg
Vertical Peak(dBi)	-1.1	125deg

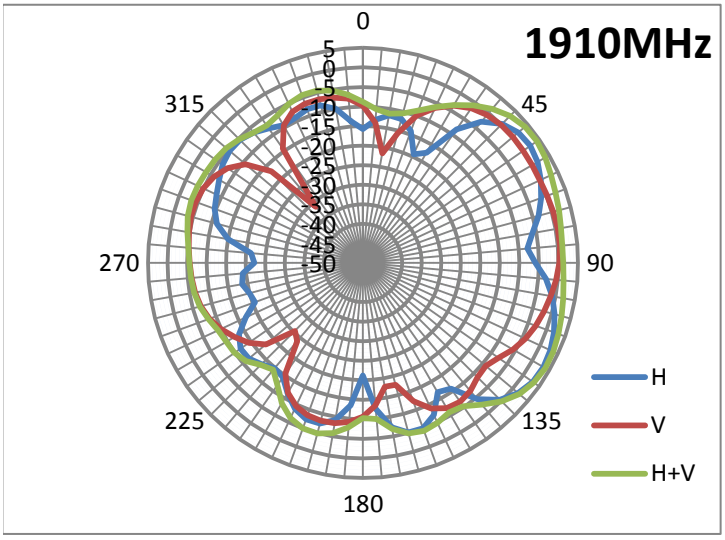

Radiation characteristic in 1710MHz ~ 1785MHz (EU/ANZ/CN/JP: UE-UTRA, Band 3, n3)

MIMO antenna: 1710.00 MHz

1710.00 MHz		
Horizontal Peak (dBi)	-1.0	60deg
Vertical Peak(dBi)	-2.4	85deg

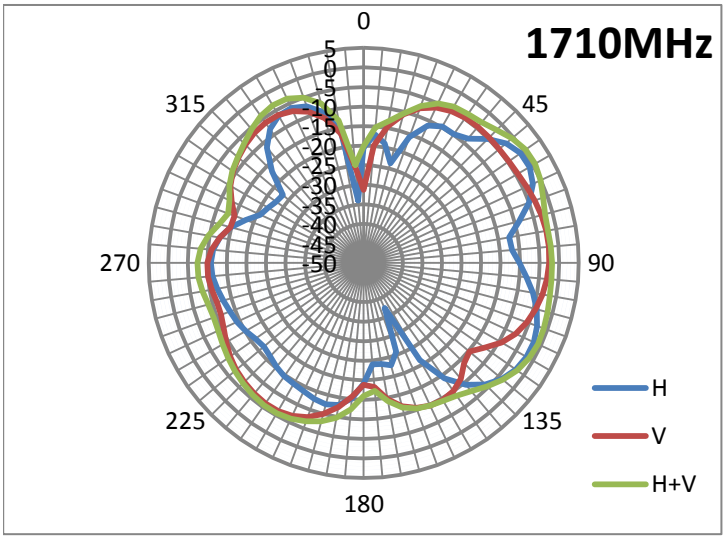

MIMO antenna: 1747.50 MHz

1747.50 MHz		
Horizontal Peak (dBi)	-0.4	120deg
Vertical Peak(dBi)	-1.2	80deg

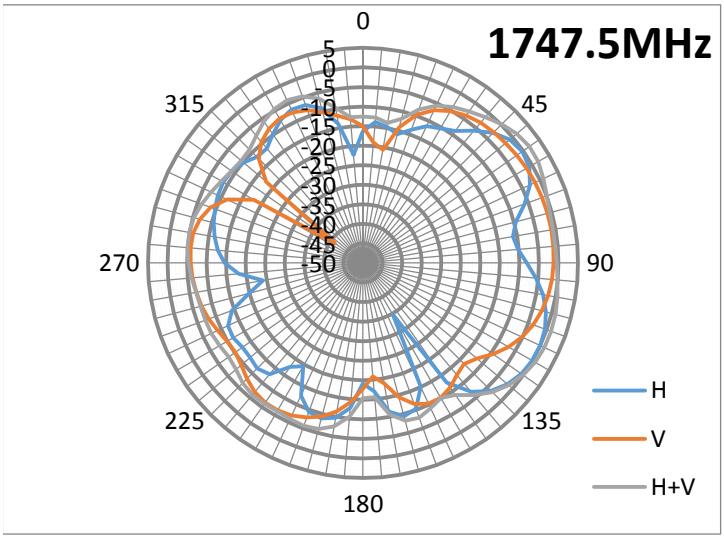

MIMO antenna: 1785.00 MHz

1785.00 MHz		
Horizontal Peak (dBi)	1.7	120deg
Vertical Peak(dBi)	1.1	80deg

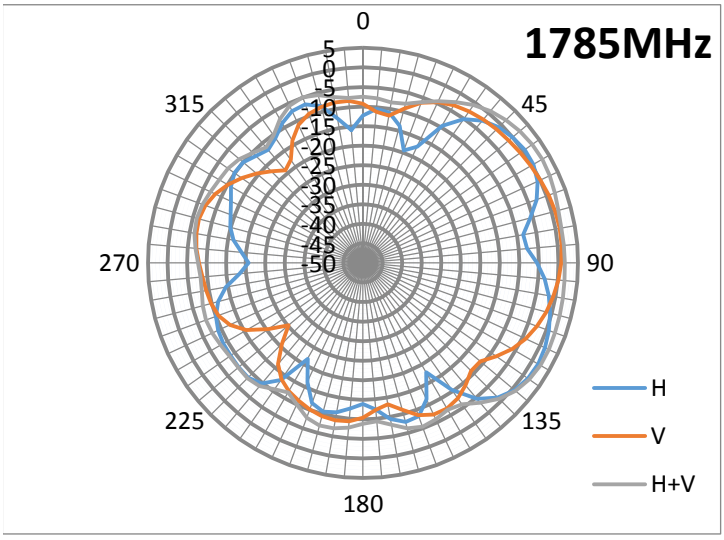

Radiation characteristic in 1710MHz ~ 1755MHz (FCC Part 27 UMTS(AWS), Band 4)

MIMO antenna: 1710.00 MHz

1710.00 MHz		
Horizontal Peak (dBi)	-1.0	60deg
Vertical Peak(dBi)	-2.4	85deg

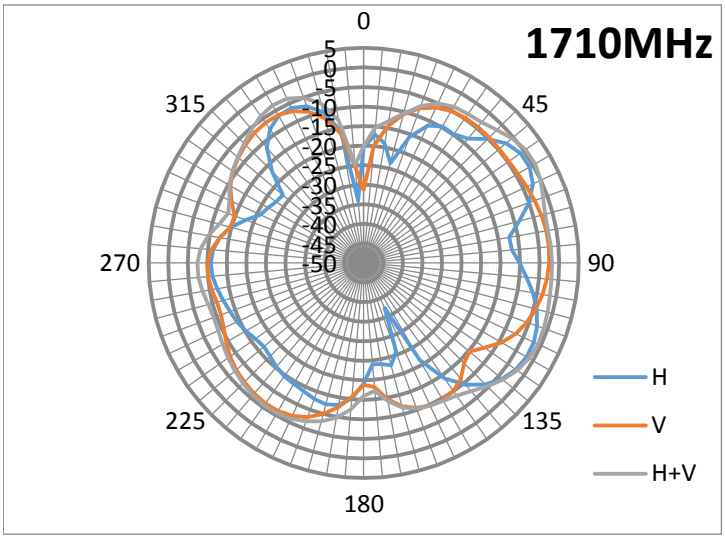

MIMO antenna: 1732.50 MHz

1732.50 MHz		
Horizontal Peak (dBi)	-0.8	55deg
Vertical Peak(dBi)	-1.8	85deg

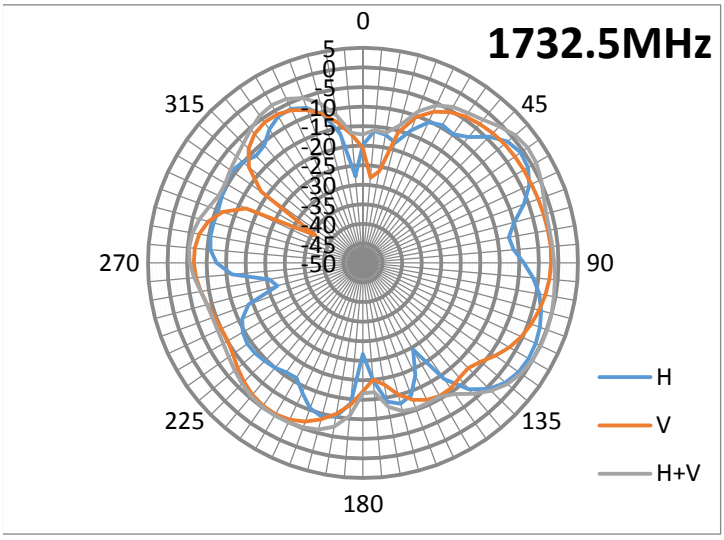

MIMO antenna: 1755.00 MHz

1755.00 MHz		
Horizontal Peak (dBi)	0.7	120deg
Vertical Peak(dBi)	-0.7	80deg

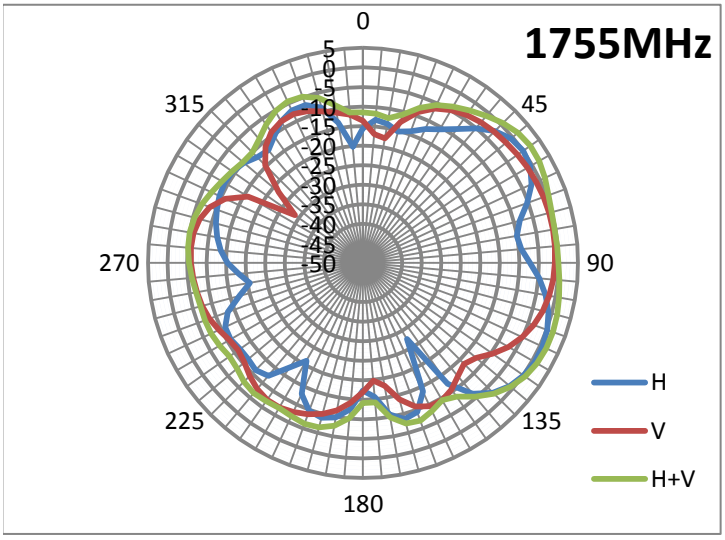

Radiation characteristic in 2500MHz ~ 2570MHz (CA/EU/ANZ UE-UTRA, Band 7, n7)

MIMO antenna: 2500.00 MHz

2500.00 MHz		
Horizontal Peak (dBi)	0.4	125deg
Vertical Peak(dBi)	-3.8	70deg

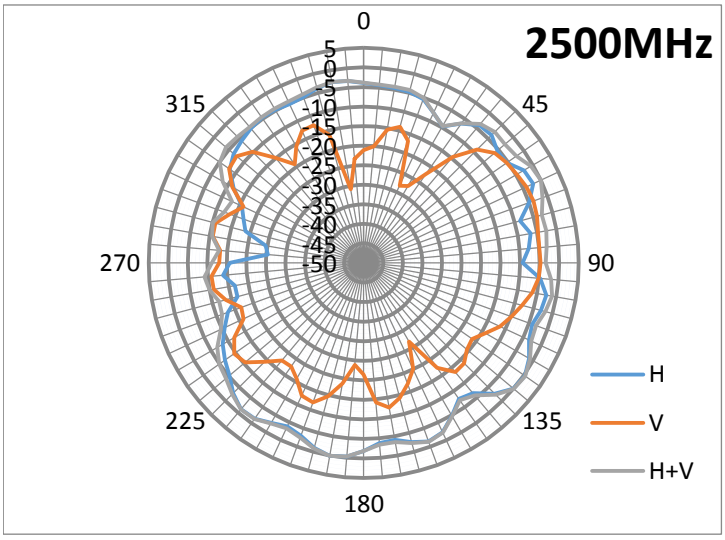

MIMO antenna: 2535.00 MHz

2535.00 MHz		
Horizontal Peak (dBi)	0.3	125deg
Vertical Peak(dBi)	-3.7	75deg

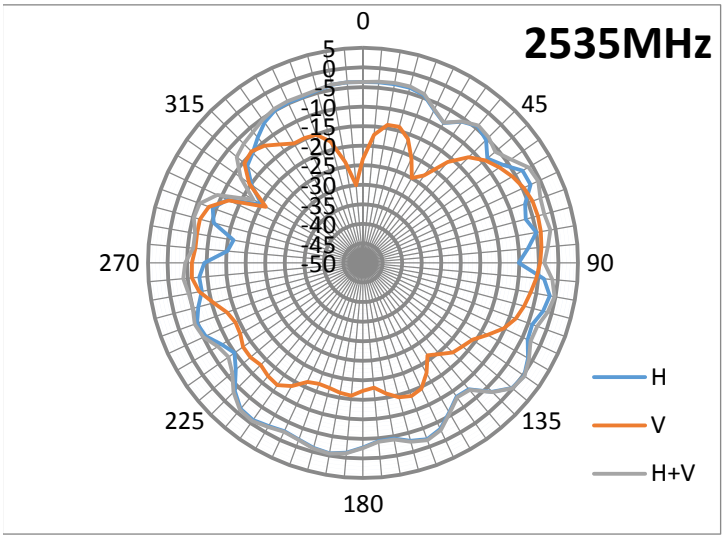

MIMO antenna: 2570.00 MHz

2570.00 MHz		
Horizontal Peak (dBi)	0.5	125deg
Vertical Peak(dBi)	-2.7	80deg

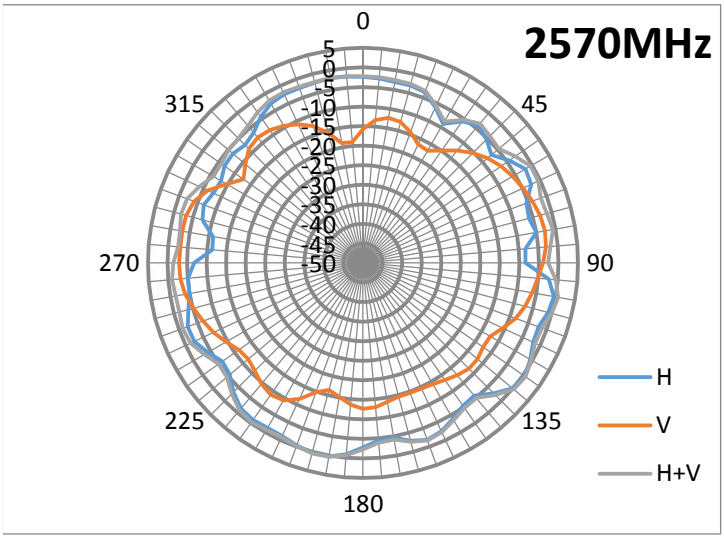

Radiation characteristic in 1850MHz ~ 1915MHz (FCC Part 24 UE-UTRA, Band 25)

MIMO antenna: 1850.00 MHz

1850.00 MHz		
Horizontal Peak (dBi)	0.7	120deg
Vertical Peak(dBi)	-1.0	80deg

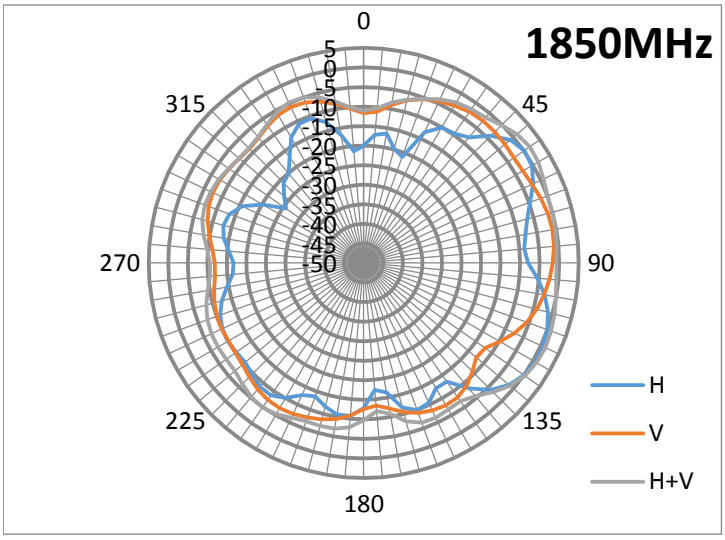

MIMO antenna: 1882.50 MHz

1882.50 MHz		
Horizontal Peak (dBi)	1.9	120deg
Vertical Peak(dBi)	-0.6	45deg

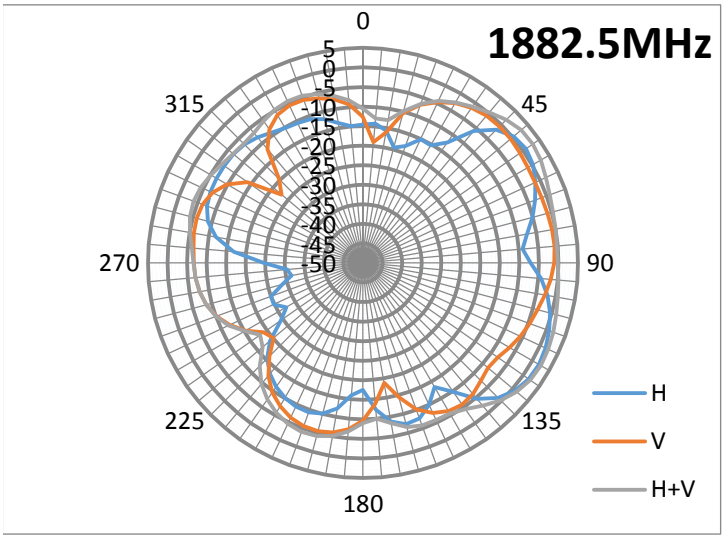

MIMO antenna: 1915.00 MHz

1915.00 MHz		
Horizontal Peak (dBi)	1.5	120deg
Vertical Peak(dBi)	0.2	80deg

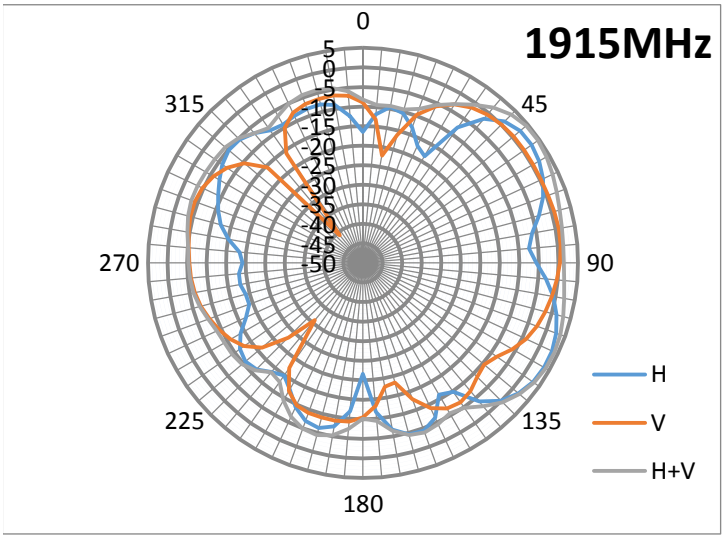

Radiation characteristic in 2305MHz ~ 2315MHz (FCC Part 27 UE-UTRA, Band 30)

MIMO antenna: 2305.00 MHz

2305.00 MHz		
Horizontal Peak (dBi)	-0.7	190deg
Vertical Peak(dBi)	-5.4	65deg

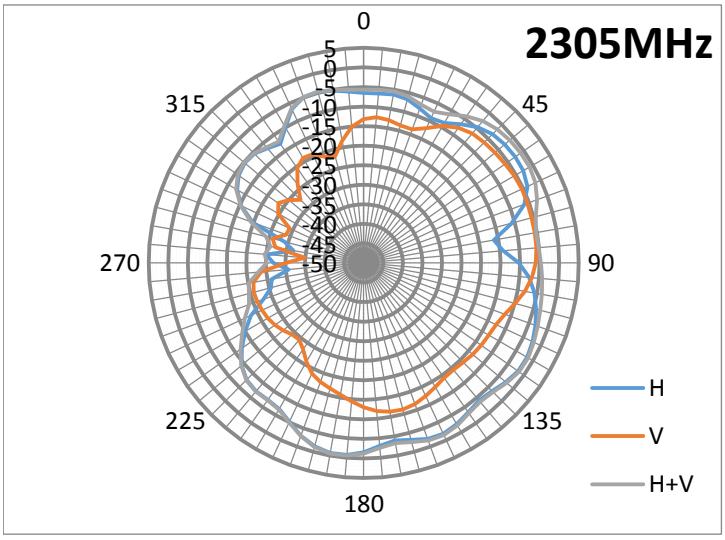

MIMO antenna: 2310.00 MHz

2310.00 MHz		
Horizontal Peak (dBi)	-0.6	190deg
Vertical Peak(dBi)	-5.0	65deg

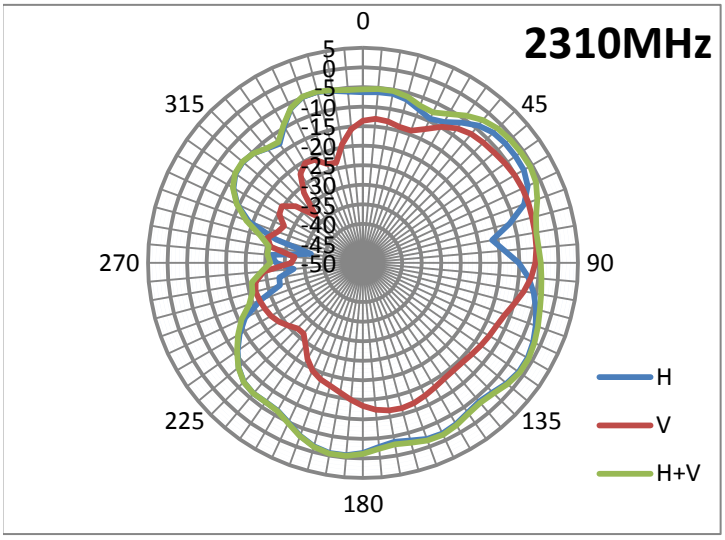

MIMO antenna: 2315.00 MHz

2315.00 MHz		
Horizontal Peak (dBi)	-1.0	185deg
Vertical Peak(dBi)	-4.9	65deg

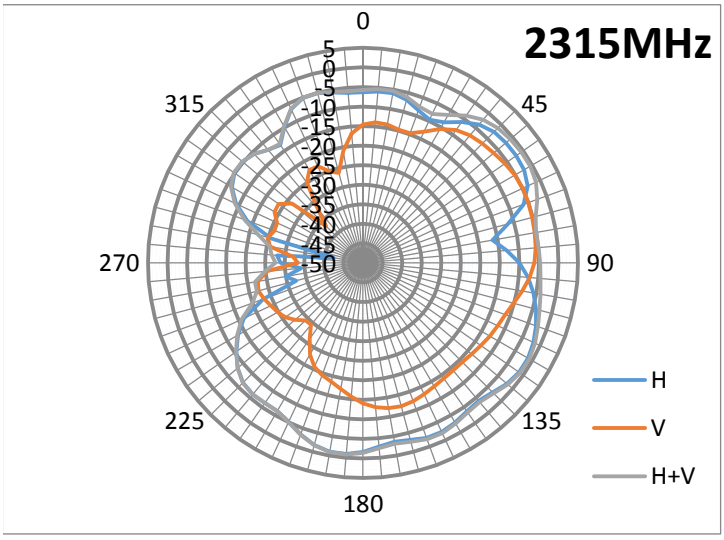

Radiation characteristic in 2570MHz ~ 2620MHz (EU/CN UE-UTRA, Band 38, n38)

MIMO antenna: 2570.00 MHz

2570.00 MHz		
Horizontal Peak (dBi)	0.5	125deg
Vertical Peak(dBi)	-2.7	80deg

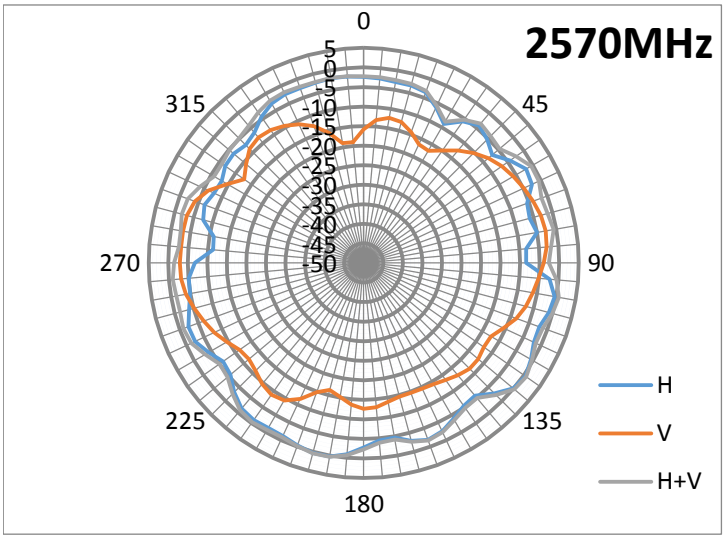

MIMO antenna: 2595.00 MHz

2595.00 MHz		
Horizontal Peak (dBi)	0.2	195deg
Vertical Peak(dBi)	-2.6	280deg

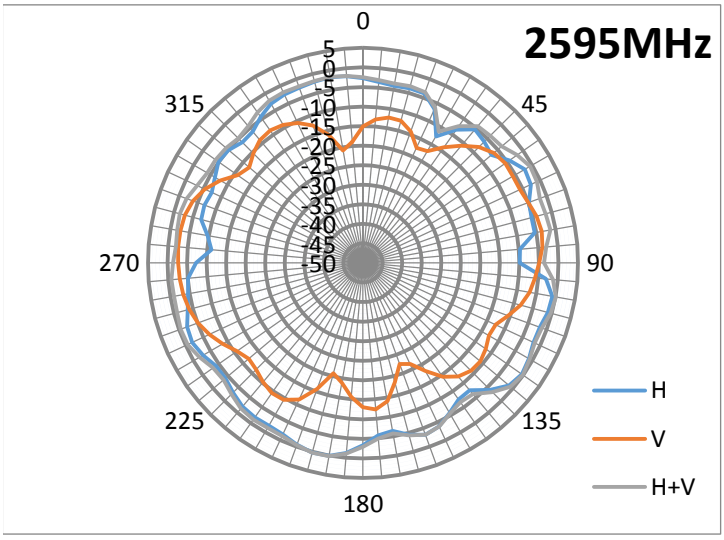

MIMO antenna: 2620.00 MHz

2620.00 MHz		
Horizontal Peak (dBi)	0.3	190deg
Vertical Peak(dBi)	-3.0	280deg

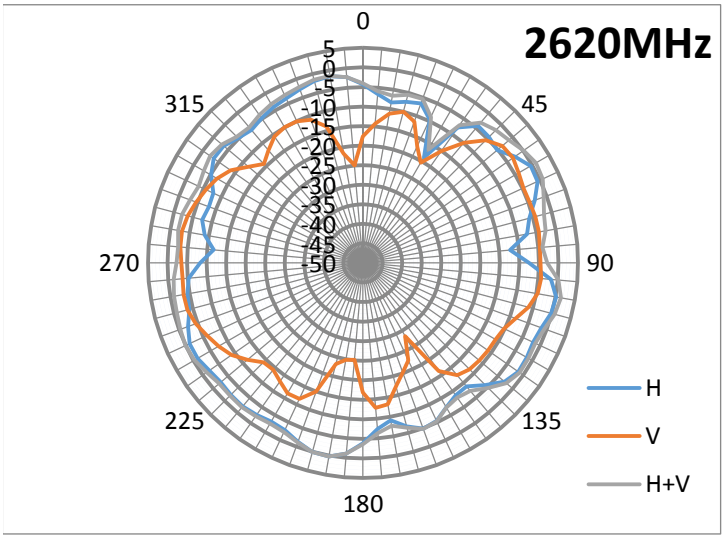

Radiation characteristic in 2300MHz ~ 2400MHz (EU/ANZ/CN UE-UTRA, Band 40)

MIMO antenna: 2300.00 MHz

2300.00 MHz		
Horizontal Peak (dBi)	-0.5	190deg
Vertical Peak(dBi)	-5.0	65deg

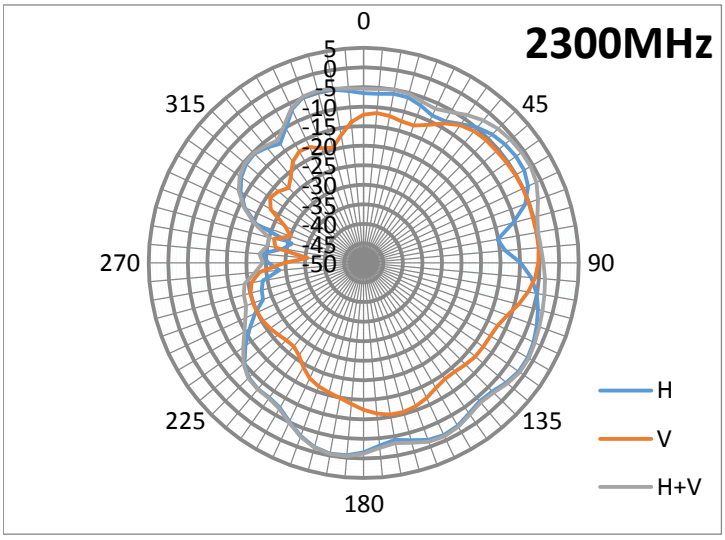

MIMO antenna: 2350.00 MHz

2350.00 MHz		
Horizontal Peak (dBi)	0.4	125deg
Vertical Peak(dBi)	-4.1	80deg

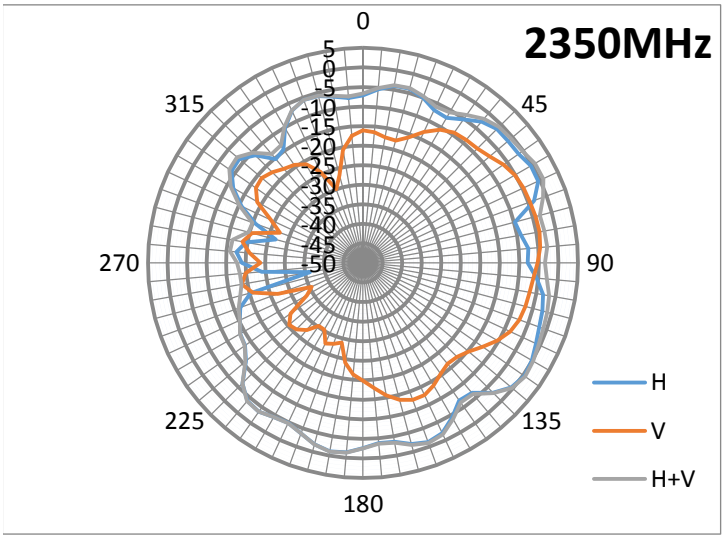

MIMO antenna: 2400.00 MHz

2400.00 MHz		
Horizontal Peak (dBi)	0.0	190deg
Vertical Peak(dBi)	-4.4	85deg

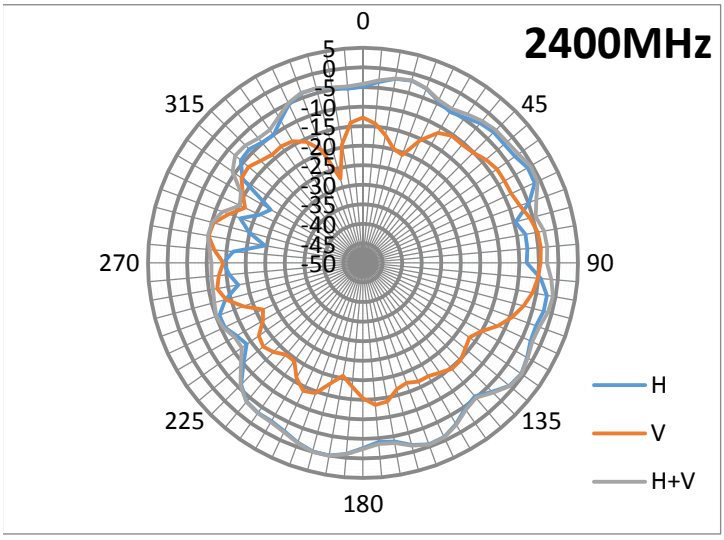

Radiation characteristic in 2496MHz ~ 2690MHz (FCC Part 27 UE-UTRA, Band 41, n41)

MIMO antenna: 2496.00 MHz

2496.00 MHz		
Horizontal Peak (dBi)	0.1	125deg
Vertical Peak(dBi)	-4.1	70deg

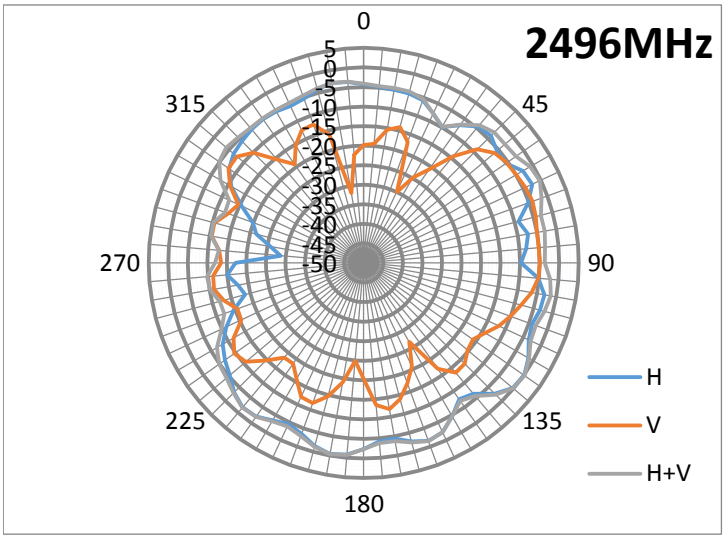

MIMO antenna: 2593.00 MHz

2593.00 MHz		
Horizontal Peak (dBi)	0.3	195deg
Vertical Peak(dBi)	-2.5	280deg

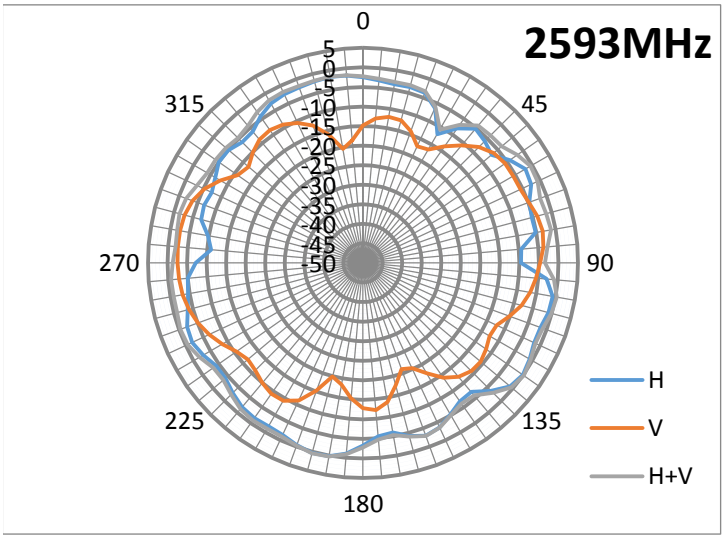

MIMO antenna: 2690.00 MHz

2690.00 MHz		
Horizontal Peak (dBi)	0.3	190deg
Vertical Peak(dBi)	-3.0	280deg

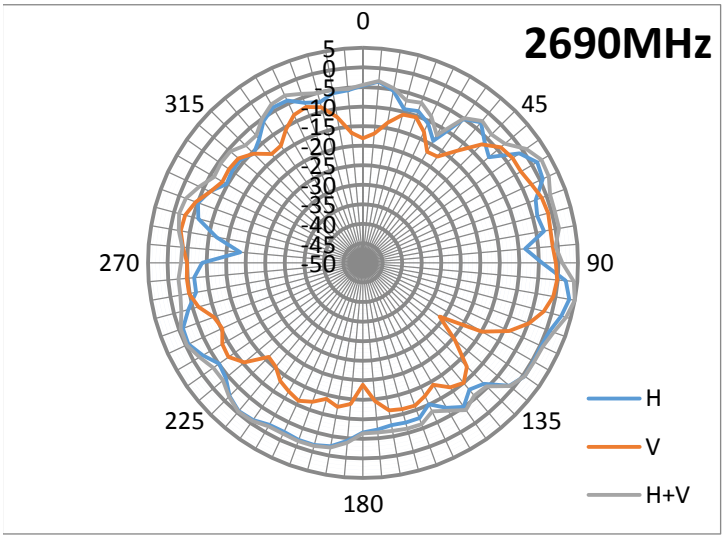

Radiation characteristic in 3400MHz ~ 3600MHz (FCC Part 96 LTE Band 42)

MIMO antenna: 3400.00 MHz

3400.00 MHz		
Horizontal Peak (dBi)	0.7	55deg
Vertical Peak(dBi)	-1.0	265deg

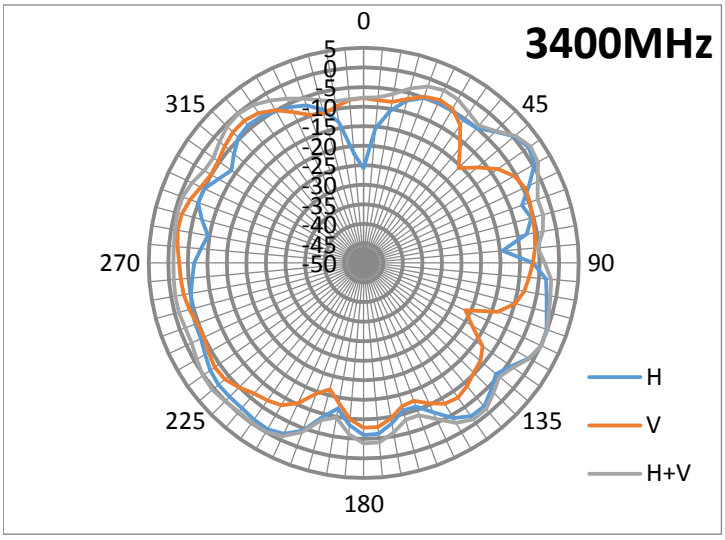

MIMO antenna: 3500.00 MHz

3500.00 MHz		
Horizontal Peak (dBi)	0.6	55deg
Vertical Peak(dBi)	-1.7	280deg

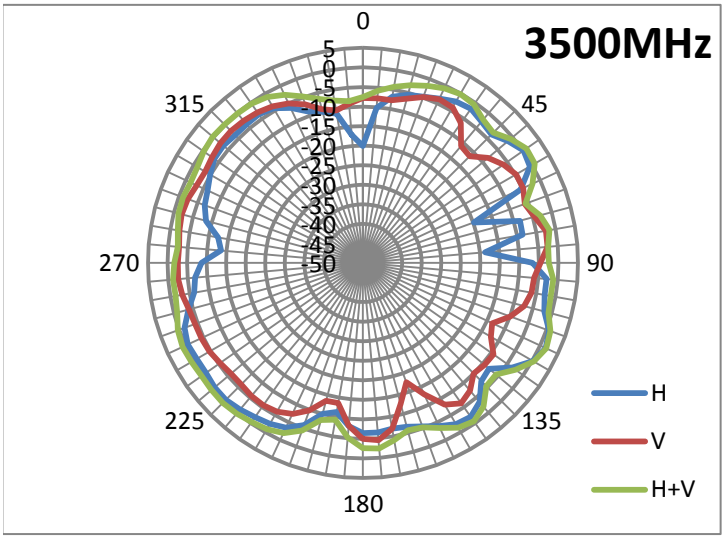

MIMO antenna: 3600.00 MHz

3600.00 MHz		
Horizontal Peak (dBi)	0.4	115deg
Vertical Peak(dBi)	-2.0	280deg

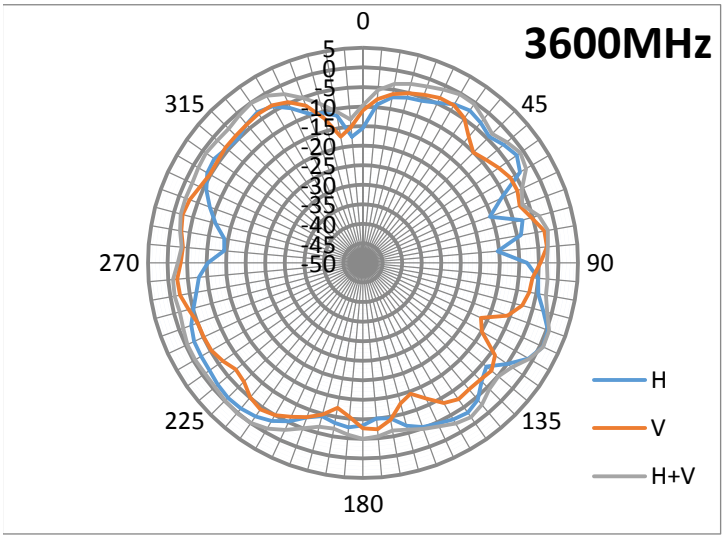

Radiation characteristic in 3400MHz ~ 3600MHz (LTE Band 43)

MIMO antenna: 3600.00 MHz

3600.00 MHz		
Horizontal Peak (dBi)	0.4	115deg
Vertical Peak(dBi)	-2.0	280deg

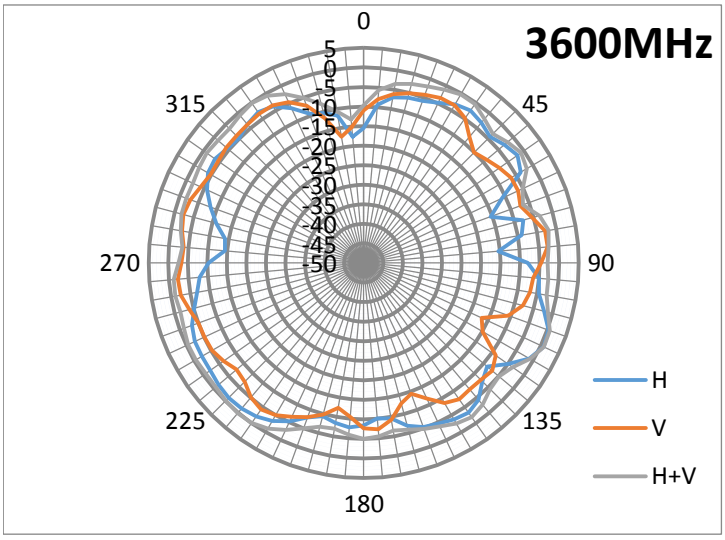

MIMO antenna: 3700.00 MHz

3700.00 MHz		
Horizontal Peak (dBi)	0.8	115deg
Vertical Peak(dBi)	-2.6	80deg

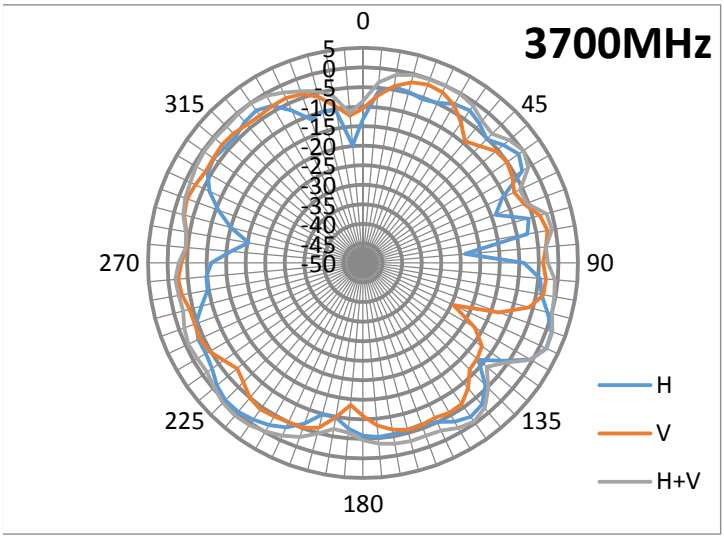

MIMO antenna: 3800.00 MHz

3800.00 MHz		
Horizontal Peak (dBi)	0.3	115deg
Vertical Peak(dBi)	-1.2	20deg

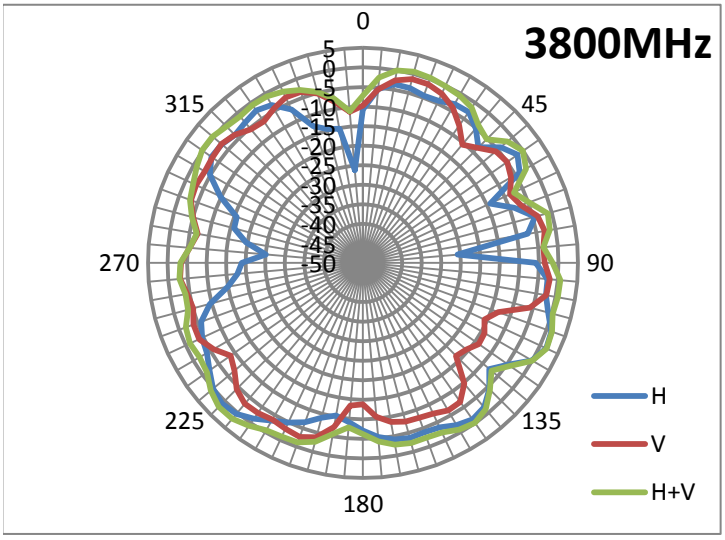

Radiation characteristic in 5150MHz ~ 5925MHz (FCC Part 96, LTE Band 48)

MIMO antenna: 3550.00 MHz

3550.00 MHz		
Horizontal Peak (dBi)	0.6	115deg
Vertical Peak(dBi)	-2.0	285deg

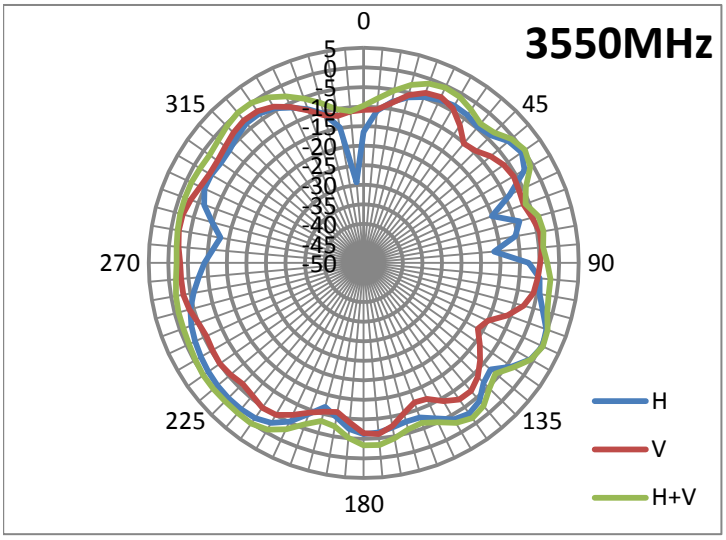

MIMO antenna: 3625.00 MHz

3625.00 MHz		
Horizontal Peak (dBi)	0.8	115deg
Vertical Peak(dBi)	-2.3	285deg

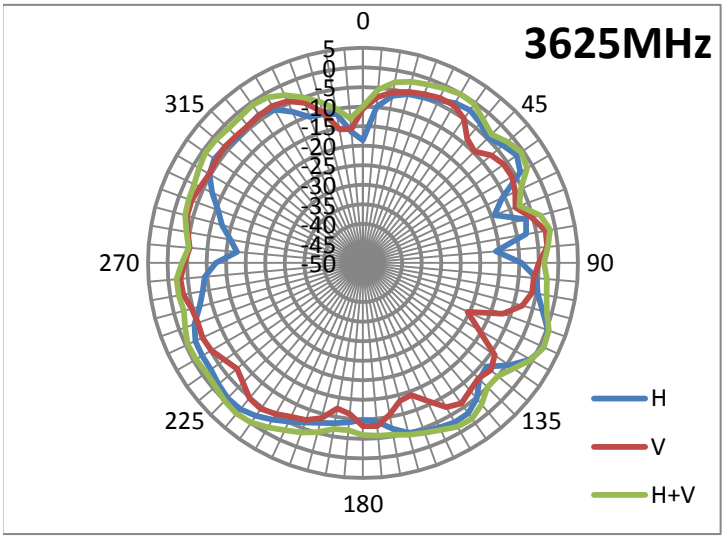

MIMO antenna: 3700.00 MHz

3700.00 MHz		
Horizontal Peak (dBi)	0.8	115deg
Vertical Peak(dBi)	-2.6	80deg

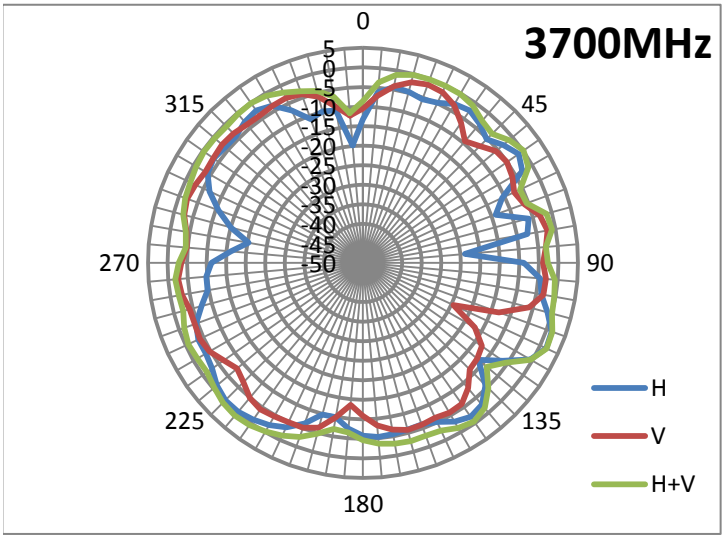

Radiation characteristic in 1710MHz ~ 1780MHz (FCC Part 27 LTE, Band 66, n66)

MIMO antenna: 1710.00 MHz

1710.00 MHz		
Horizontal Peak (dBi)	-1.0	60deg
Vertical Peak(dBi)	-2.4	85deg

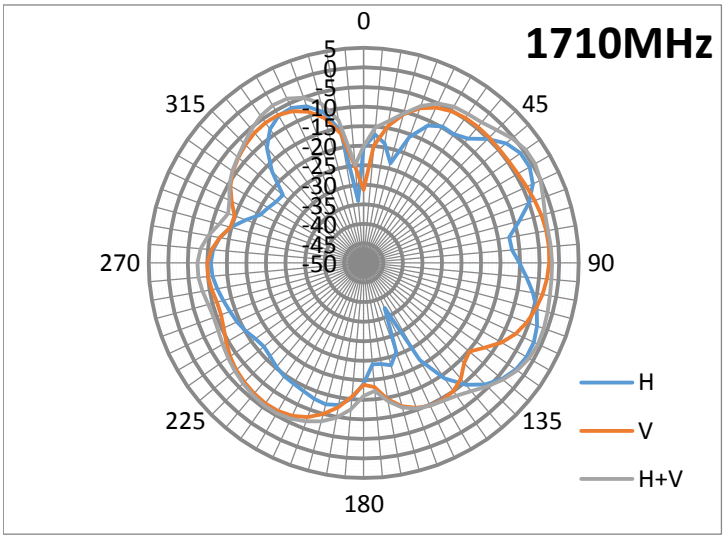

MIMO antenna: 1745.00 MHz

1745.00 MHz		
Horizontal Peak (dBi)	-0.4	120deg
Vertical Peak(dBi)	-1.2	85deg

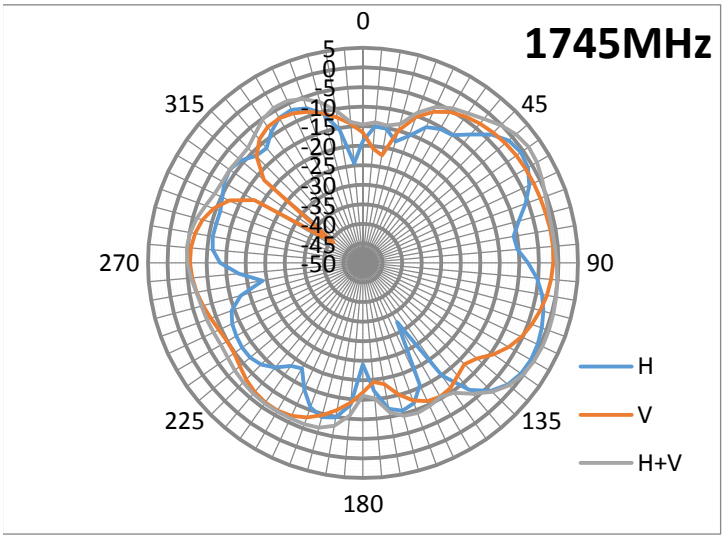

MIMO antenna: 1780.00 MHz

1780.00 MHz		
Horizontal Peak (dBi)	1.6	120deg
Vertical Peak(dBi)	0.7	80deg

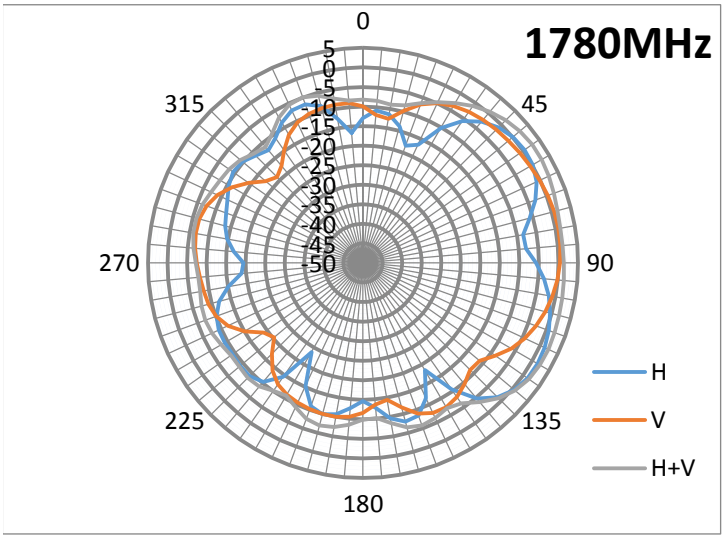

Radiation characteristic in 3300MHz ~ 4200MHz (FCC/EU/CN/JP 5G NR Band 77)

MIMO antenna: 3300.00 MHz

3300.00 MHz		
Horizontal Peak (dBi)	0.6	100deg
Vertical Peak(dBi)	-0.1	95deg

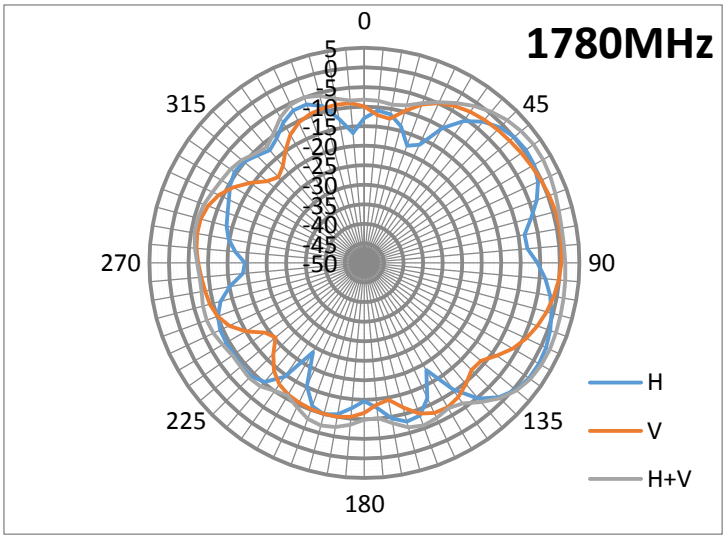

MIMO antenna: 3750.00 MHz

3750.00 MHz		
Horizontal Peak (dBi)	0.5	115deg
Vertical Peak(dBi)	-1.5	20deg

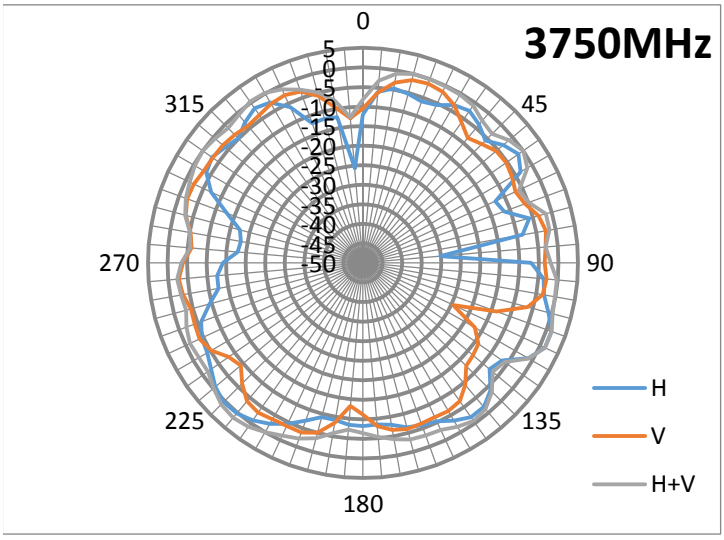

MIMO antenna: 4200.00 MHz

4200.00 MHz		
Horizontal Peak (dBi)	0.7	115deg
Vertical Peak(dBi)	-1.3	15deg

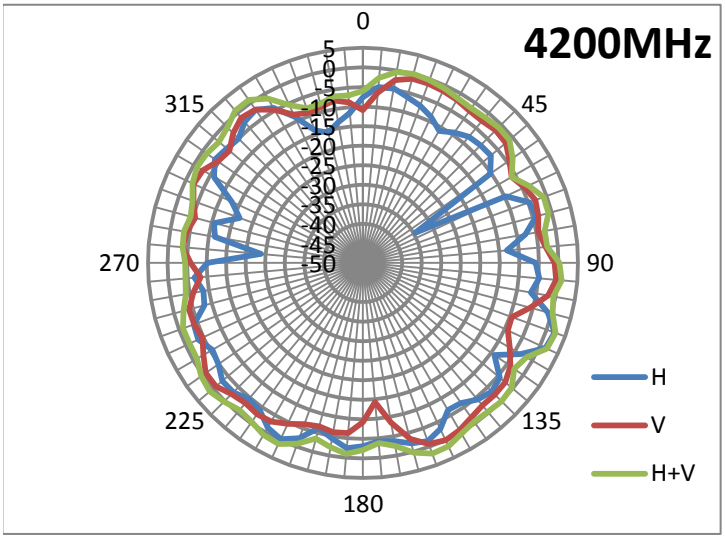

Radiation characteristic in 3300MHz ~ 3800MHz (EU/CN/JP 5G NR Band 78)

MIMO antenna: 3300.00 MHz

3300.00 MHz		
Horizontal Peak (dBi)	0.6	100deg
Vertical Peak(dBi)	-0.1	95deg

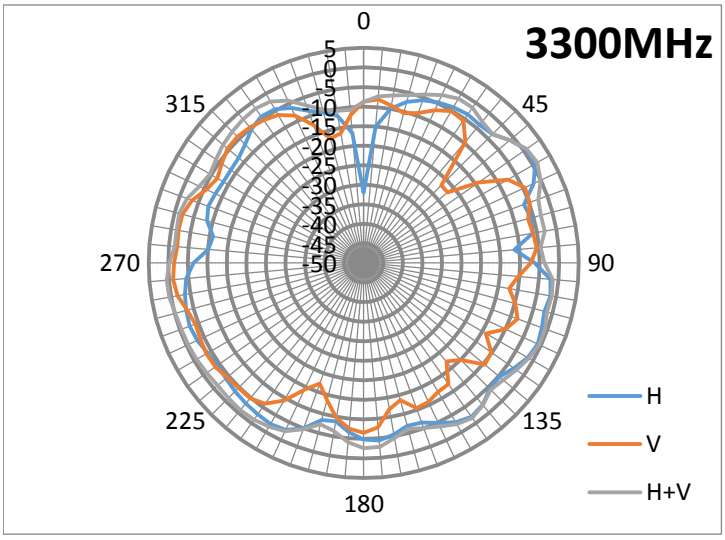

MIMO antenna: 3550.00 MHz

3550.00 MHz		
Horizontal Peak (dBi)	0.6	115deg
Vertical Peak(dBi)	-2.0	285deg

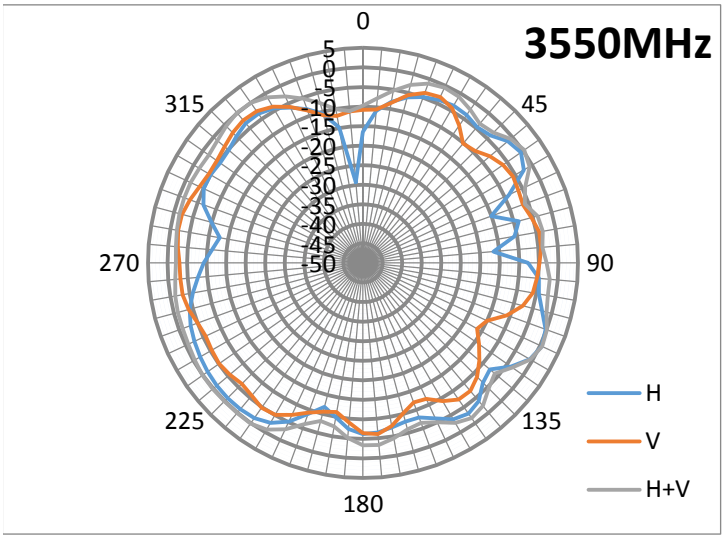

MIMO antenna: 3800.00 MHz

3800.00 MHz		
Horizontal Peak (dBi)	0.3	115deg
Vertical Peak(dBi)	-1.2	20deg

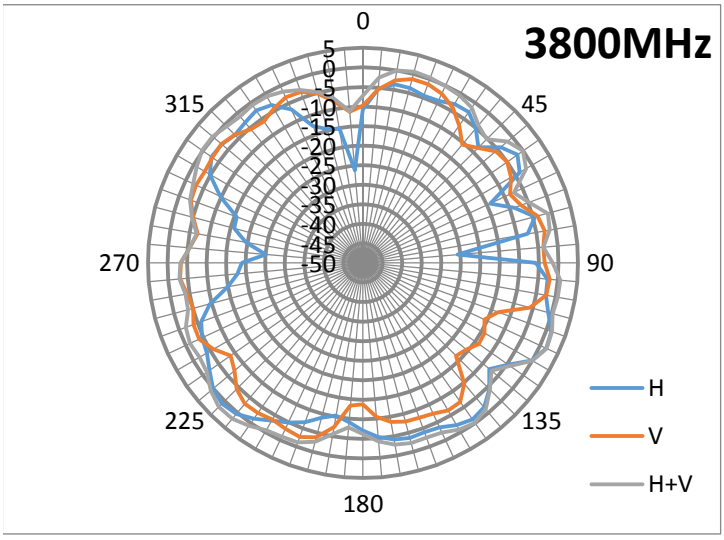

Radiation characteristic in 4400MHz ~ 5000MHz (CN/JP 5G NR Band 79)

MIMO antenna: 4400.00 MHz

4400.00 MHz		
Horizontal Peak (dBi)	0.8	110deg
Vertical Peak(dBi)	0.0	155deg

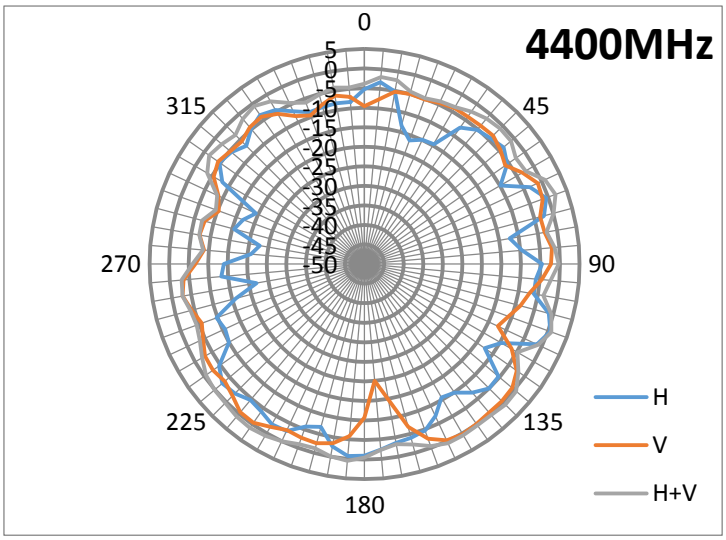

MIMO antenna: 4700.00 MHz

4700.00 MHz		
Horizontal Peak (dBi)	0.5	110deg
Vertical Peak(dBi)	0.2	150deg

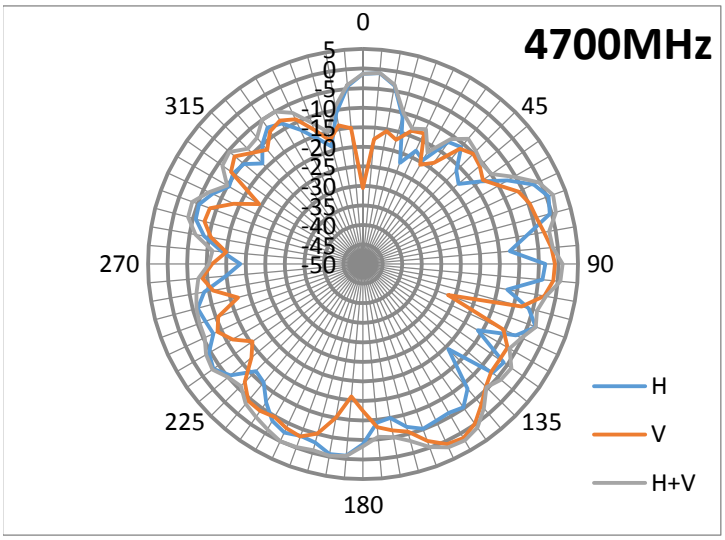

MIMO antenna: 5000.00 MHz

5000.00 MHz		
Horizontal Peak (dBi)	-0.5	70deg
Vertical Peak(dBi)	0.4	150deg

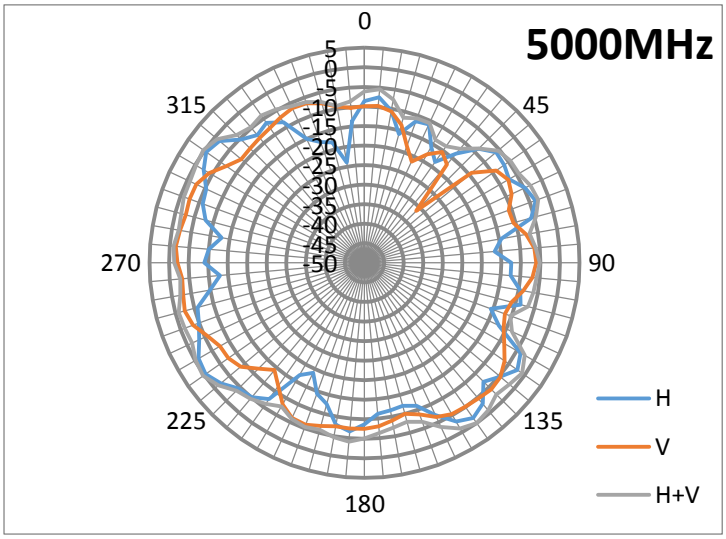

Section 4. Host Platform Information

WWAN Antenna Location

WWAN card Location

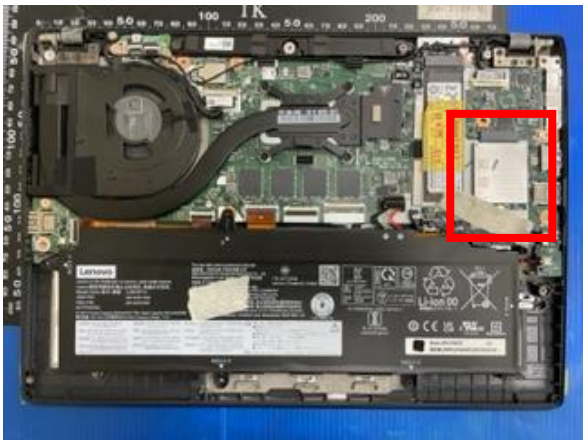

Section 5. Antenna Host Platform Location Information

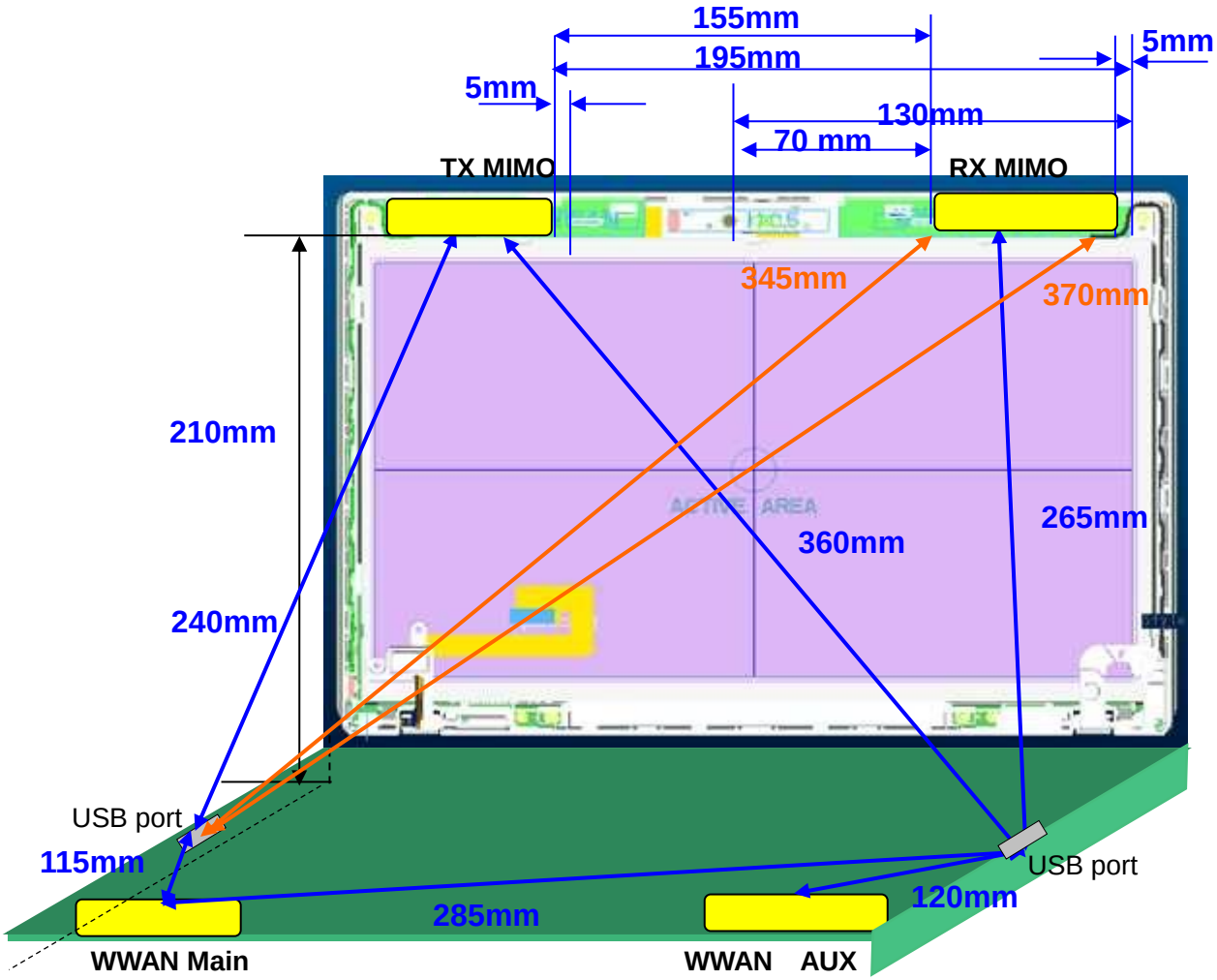

Section 6. Antenna dimensional information for SAR evaluation

Section 7. Co-Location Antenna Separation

WWAN - Bluetooth:

The output power of Bluetooth device is 3.06mW (≤ 60/f(GHz)) and the antenna-to-antenna distance is ≥ 5 cm, so the Bluetooth device is not required SAR evaluation in accordance with Table-2 of KDB616217.

WWAN - USB:

The USB ports are located with more than 5cm of separation distance from the all WLAN/WiMAX and WWAN Tx antennas. Therefore these are compliant with the section 2) of “Supplement to FCC KDB 616217”.

WWAN - WLAN:

The WWAN main (Tx) antenna and WLAN (or WiMAX) antennas co-locate with at least 5.0 mm of separation distance, and both devices transmit RF simultaneously.
Any WWAN features (antenna and transmitter module) won’t be incorporated in the host PC system nor shipped associated with the applying WLAN transmitter device, unless the relevant certification process completes for the simultaneous transmission.

Section 8. Host PC labeling