Z13 Gen 1 and Z16 Gen 1
User Guide

Read this first

Before using this documentation and the product it supports, ensure that you read and understand the following:

- *Safety and Warranty Guide*
- *Setup Guide*
- *Generic Safety and Compliance Notices*

First Edition (April 2022)

© Copyright Lenovo 2022.

LIMITED AND RESTRICTED RIGHTS NOTICE: If data or software is delivered pursuant to a General Services Administration “GSA” contract, use, reproduction, or disclosure is subject to restrictions set forth in Contract No. GS-35F-05925.

Contents

Discover your Lenovo notebook iii

Chapter 1. Meet your computer 1
Front view 1
Side view 4
Bottom view 6
Features and specifications 7
USB specifications 8

Chapter 2. Get started with your computer 9
Access networks 9
Connect to Wi-Fi networks 9
Connect to the wired Ethernet 9
Connect to a cellular network (for selected models) 9
Turn on the Airplane mode 10
Interact with your computer 10
Use the keyboard shortcuts 10
Use the TrackPoint pointing device 12
Use the trackpad 13
Use the touch screen (for selected models) . . 14
Connect to an external display 16

Chapter 3. Explore your computer . . 19
Lenovo apps 19
The Vantage app 19
AI Meeting Manager (for selected models) . . . 19
Lenovo Smart Appearance (for selected models) 20
Lenovo Quick Clean 20
Smart features (for selected models) 21
Color calibration (for selected models) 23
Intelligent cooling 24
Manage power 24
Check the battery status 24
Charge the computer 25
Change the power settings 26
Transfer data 26
Set up a Bluetooth connection 26
Use an SD card (for ThinkPad Z16 Gen 1 only) 26
Accessories 27
Purchase accessories 27

Chapter 4. Secure your computer and information 29
Lock the computer 29
Log in with your fingerprint 30
Log in with your face ID (for selected models) . . . 31
Detect human presence (for selected models) . . . 31
Protect your privacy (for selected models) 32
Protect data against power loss (for selected models) 33
UEFI BIOS passwords 33
Password types 33
Set, change, or remove a password 34
Password types 35
Set, change, and remove a password 36
Associate your fingerprints with passwords (for selected models) 37

Chapter 5. Configure advanced settings 39
UEFI BIOS 39
Enter the UEFI BIOS menu 39
Navigate in the UEFI BIOS interface 39
Set the system date and time 39
Change the startup sequence 39
Update UEFI BIOS 39
Install a Windows operating system and drivers . . 40

Chapter 6. CRU replacement 43
CRU list 43
Disable Fast Startup and the built-in battery 44
Replace a CRU 44
Removable battery 44
Base cover assembly 45
Wireless WAN card (for selected models) . . . 47
Memory module 48
Internal storage drive 49
2242 M.2 solid-state drive 51
Speaker assembly 53
Coin-cell battery 54
Keyboard 55

Chapter 7. Help and support 61
Frequently asked questions 61
Error messages 62
Beep errors 63
Self-help resources 64
Windows label 65
Call Lenovo 65
Before you contact Lenovo 65
Lenovo Customer Support Center 66

© Copyright Lenovo 2022

Purchase additional services. 67

Appendix A. Compliance information. 69

Appendix B. Notices and trademarks. 71

Discover your Lenovo notebook

Thank you for choosing a Lenovo® notebook! We are dedicated to delivering the best solution to you.

Before starting your tour, please read the following information:

- Illustrations in this documentation might look different from your product.
- Depending on the model, some optional accessories, features, software programs, and user interface instructions might not be applicable to your computer.
- Documentation content is subject to change without notice. To get the latest documentation, go to https://pcsupport.lenovo.com.

© Copyright Lenovo 2022

Chapter 1. Meet your computer

Front view

ThinkPad Z13 Gen 1

	Infrared camera* / Camera		Microphone
	TrackPoint® pointing stick		Fingerprint reader
	Trackpad		

* for selected models

© Copyright Lenovo 2022

ThinkPad Z16 Gen 1

	Infrared camera* / Camera		Microphone
	TrackPoint® pointing stick		Speaker
	Fingerprint reader		Trackpad

* for selected models

Related topics

- “Log in with your face ID (for selected models)” on page 31
- “Detect human presence (for selected models)” on page 31
- “Use the touch screen (for selected models)” on page 14
- “Protect your privacy (for selected models)” on page 32

- “Log in with your fingerprint” on page 30
- “Use the TrackPoint pointing device” on page 12
- “Use the trackpad” on page 13

Side view

ThinkPad Z13 Gen 1

	Security-lock slot		USB-C power connector
*	Nano-SIM-card tray		Power button
	Audio connector		

* for selected models

ThinkPad Z16 Gen 1

	Security-lock slot		USB-C power connector
*	Nano-SIM-card tray		Power button

	USB-C power connector		SD card reader
	Audio connector		Security-lock slot

* for selected models

Related topics

- “” on page
- “” on page
- “Connect to a cellular network (for selected models)” on page 9
- “Lock the computer” on page 29

Bottom view

	Speaker (for Z13 Gen 1 only)

CAUTION:
When the computer is operating, it should be placed on a hard and flat surface with its bottom area not in contact with user's bare skin. Under normal operating conditions, the temperature of the bottom surface will remain within an acceptable range as defined in *IEC 62368-1***, but such temperatures can still be high enough to cause discomfort or harm to the user if directly touched for over one minute at a time. As such, it is recommended that users avoid prolonged direct contact with the bottom of the computer.**

Note: Some Lenovo computers include a display that can be rotated 360 degrees. When those products are used as a tablet computer, the temperatures of all the accessible parts are within an acceptable range as defined in *IEC 62368-1*.

Features and specifications

For detailed specifications of your computer, go to https://psref.lenovo.com and search by product.

Memory	Double data rate 5 (DDR5), soldered on board, up to 32 GB
Storage device	**For ThinkPad Z13 Gen 1:** One slot, 2242 M.2 solid-state drive, up to 1TB **For ThinkPad Z16 Gen 1:** One slot, 2280 M.2 solid-state drive, up to 1TB
Audio	• Dolby Atmos Speaker System • Dolby Voice
Display	• OLED display* • Color display with In-Plane Switching (IPS) technology • Display ratio: 16:10 • Display resolution: 1920 x 1200 pixels, 2880 x 1800 pixels, or 3840 x 2400 pixels • Multi-touch technology* • TUV Eye Safe or Eye Comfort certified* **Notes:** For non-OLED display with High-Dynamic Range (HDR) function, this function only works under **Hybrid Graphics** mode. To switch the display setting between **Hybrid Graphics** mode and **Discrete Graphics** mode: 1. Restart the computer. When the logo screen is displayed, press F1 to enter the UEFI BIOS menu. 2. Select **Config** → **Display** → **Graphic Devices** and follow the on-screen instructions.
Security features	• Face authentication* • Human presence detection* • Fingerprint reader* • Glance Privacy Guard* • Glance Privacy Alert* • ePrivacy panel* • Trusted Platform Module (TPM)*
Wireless features	• Bluetooth • GPS (on wireless WAN model)* • Wireless LAN • Wireless WAN (4G or 5G)* **Note:** The 4G or 5G cellular service is provided by authorized mobile service carriers in some countries or regions. You must have a cellular plan from a service carrier to connect to the cellular network. The cellular data plan might vary by location.

* for selected models

USB specifications

Note: Depending on the model, some USB connectors might not be available on your computer.

Connector name	Description
 • USB-C (3.2 Gen 1) connector • USB-C (3.2 Gen 2) connector	• Charge USB-C compatible devices with the output voltage and current of 5 V and 1.5 A. • Connect to an external display: – USB-C to VGA: up to 1920 x 1200 pixels, 60 Hz – USB-C to DP: up to 5120 x 3200 pixels, 60 Hz • Connect to USB-C accessories to help expand your computer functionality. To purchase USB-C accessories, go to https://www.lenovo.com/accessories.

Statement on USB transfer rate

Depending on many factors such as the processing capability of the host and peripheral devices, file attributes, and other factors related to system configuration and operating environments, the actual transfer rate using the various USB connectors on this device will vary and will be slower than the data rate listed below for each corresponding device.

USB device	Data rate (Gbit/s)
3.2 Gen 1 / 3.1 Gen 1	5
3.2 Gen 2 / 3.1 Gen 2	10
3.2 Gen 2 × 2	20
Thunderbolt 3	40
Thunderbolt 4	40

Chapter 2. Get started with your computer

Access networks

This section helps you connect to a wireless or wired network.

Connect to Wi-Fi networks

Click the network icon in the Windows® notification area, and then select a network for connection. Provide required information, if needed.

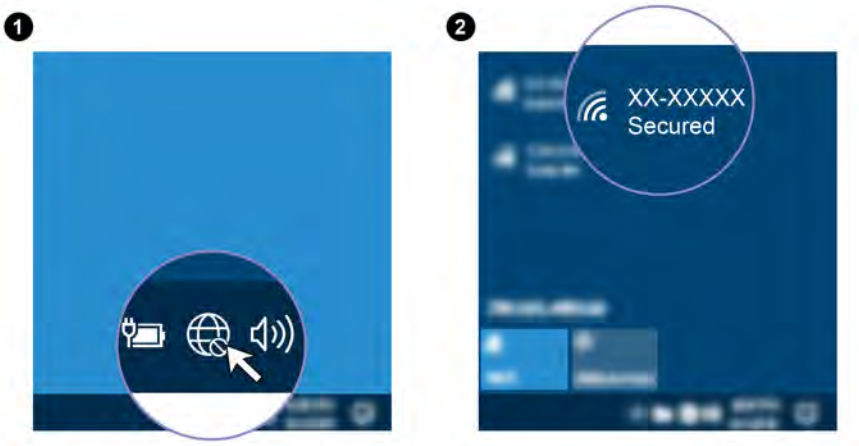

Connect to the wired Ethernet

To connect your computer to a local network, you need a Lenovo USB-C to Ethernet Adapter. Lenovo USB-C to Ethernet Adapter is available as an option and shipped with some computer models. You can purchase one from Lenovo at https://www.lenovo.com/accessories.

Connect to a cellular network (for selected models)

To connect a 4G or 5G cellular data network, you must have a wireless wide area network (WWAN) card and a nano-SIM card installed. The nano-SIM card might come with your computer by countries or regions. If no nano-SIM card is shipped, you will need to purchase one from authorized service carriers.

© Copyright Lenovo 2022

Depending on model, your computer might have no WWAN card installed. For installation procedures of the WWAN card, see “Wireless WAN card (for selected models)” on page 47.

Notes:

- The 4G or 5G cellular service is provided by authorized mobile service carriers in some countries or regions. You must have a cellular plan from a service carrier to connect to the cellular network. The cellular data plan might vary by location.
- Network connection speeds might also vary by location, environment, network conditions and other factors.

To establish a cellular connection:

1. Turn off the computer.
2. Locate the nano-SIM card slot and insert the nano-SIM card as shown. Note the orientation of the card and ensure that it is seated correctly.

3. Turn on the computer.
4. Click the network icon, and then select the cellular network icon from the list. Provide required information, if needed.

Turn on the Airplane mode

When the Airplane mode is enabled, all wireless features are disabled.

1. Click the action center icon in the Windows notification area.
2. Click **Airplane mode** to turn on the Airplane mode.

Interact with your computer

Your computer provides you various ways to navigate the screen.

Use the keyboard shortcuts

The special keys on the keyboard help you work more effectively.

https://support.lenovo.com/us/en/videos/vid500145

Fn + Esc FnLock	Invoke the special function printed as an icon on each key or standard function of F1–F12 function keys. FnLock indicator on: standard function FnLock indicator off: special function
F1	Enable / disable speakers

F2	Decrease volume
F3	Increase volume
F4	Enable / disable microphones
F5	Darken display
F6	Brighten display
F7	Manage external displays
F8	Enable / disable airplane mode
F9	Open / collapse notification center
F10	Answer incoming calls on Microsoft Teams®
F11	Decline incoming calls on Microsoft Teams
F12	Customize the function of this key on the Vantage app
Fn +	Open calculator
Fn + Backspace	Enter sleep mode
Fn + PrtSc	Open Snipping Tool
Fn +	Toggle keyboard backlight (for selected models)
Fn + B	Break operation
Fn + P	Pause operation
Fn + K	Scroll contents
Fn + S	Send system request
Fn + $ 4	Enter sleep mode To wake up the computer, press Fn or the power button.

Fn + <	Go to beginning
Fn + >	Go to end

Use the TrackPoint pointing device

The TrackPoint pointing device enables you to perform all the functions of a traditional mouse, such as pointing, clicking, and scrolling.

Use the TrackPoint pointing device

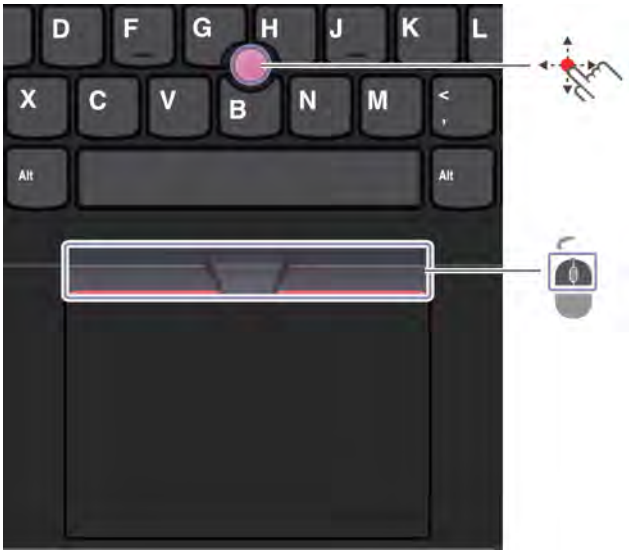

TrackPoint pointing stick

Use your finger to apply pressure to the pointing-stick nonslip cap in any direction parallel to the keyboard. The pointer on the screen moves accordingly. The higher the pressure applied, the faster the pointer moves.

TrackPoint buttons

The left-click button and right-click button correspond to the left and right buttons on a traditional mouse. Press and hold the dotted middle button while using your finger to applying pressure to the pointing stick in the vertical or horizontal direction. Then, you can scroll through the document, Web site, or apps.

Disable the TrackPoint pointing device

The TrackPoint pointing device is active by default. To disable the device:

1. Open the **Start** menu, and then click **Settings** → **Devices** → **Mouse**.
2. Follow the on-screen instructions to disable TrackPoint.

Replace the pointing-stick nonslip cap

Note: Ensure that the new cap has grooves a.

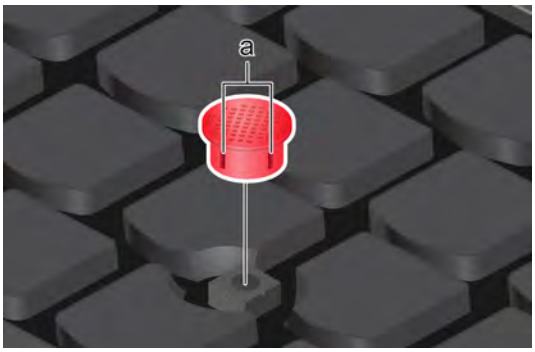

Use the trackpad

You can use the trackpad to perform all the pointing, clicking, and scrolling functions of a traditional mouse.

Use the trackpad

	Left-click zone		Right-click zone

Use the touch gestures

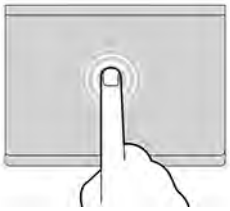

Tap once to select or open an item.

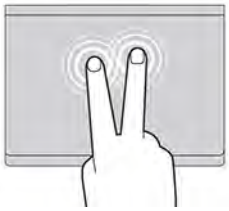

Tap twice quickly to display a shortcut menu.

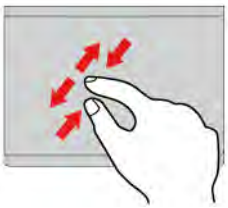

Two-finger zoom in or zoom out.

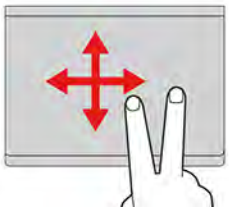

Scroll through items.

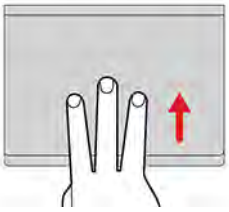

Open the task view to see all open windows.

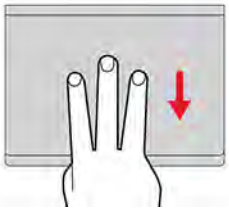

Show the desktop.

Notes:
- When using two or more fingers, ensure that you position your fingers slightly apart.
- Some gestures are not available if the last action was done from the TrackPoint pointing device.
- Some gestures are only available when you are using certain apps.
- If the trackpad surface is stained with oil, turn off the computer first. Then, gently wipe the trackpad surface with a soft and lint-free cloth moistened with lukewarm water or computer cleaner.

For more gestures, see the help information of the pointing device.

Disable the trackpad

The trackpad is active by default. To disable the device:

1. Open the **Start** menu, and then click **Settings** → **Devices** → **Touchpad**.
2. In the Touchpad section, turn off the **Touchpad** control.

Use the touch screen (for selected models)

If your computer display supports the multi-touch function, you can navigate the screen with simple touch gestures. For more touch gestures, refer to https://support.microsoft.com/windows.

Note: Some gestures might not be available when you are using certain apps.

Tap once to single click

Tap twice quickly to double-click

Tap and hold to right-click

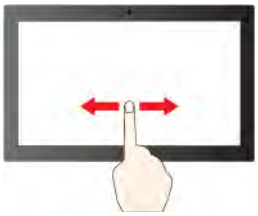

Slide to scroll through items

Zoom out

Zoom in

Swipe from the left: view all open windows (Windows 10)

Swipe from the left: open widget panel (Windows 11)

Swipe from the right: open action center (Windows 10)

Swipe from the right: open notification center (Windows 11)

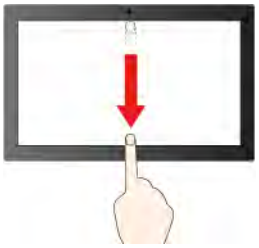

Swipe downwards shortly: show title bar

Swipe downwards: close the current app

Drag

Maintenance tips:

- Turn off the computer before cleaning the touch screen.
- Use a dry, soft, and lint-free cloth or a piece of absorbent cotton to remove fingerprints or dust from the touch screen. Do not apply solvents to the cloth.
- The touch screen is a glass panel covered with a plastic film. Do not apply pressure or place any metallic object on the screen, which might damage the touch panel or cause it to malfunction.
- Do not use fingernails, gloved fingers, or inanimate objects for input on the screen.
- Regularly calibrate the accuracy of the finger input to avoid a discrepancy.

Connect to an external display

Connect your computer to a projector or a monitor to give presentations or expand your workspace.

Connect to a wired display

If your computer cannot detect the external display, right-click a blank area on the desktop and select display settings. Then follow the on-screen instructions to detect the external display.

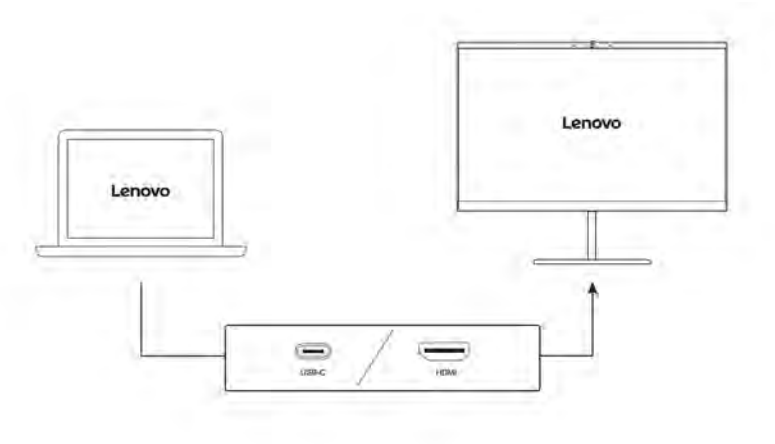

Supported resolution

The following table lists the supported maximum resolution of the external display.

Connect the external display to	Supported resolution
USB-C connector	Up to 5K / 60 Hz
HDMI™ connector	Up to 4K / 60 Hz

Note: The refresh rate higher than 60 Hz can also be supported. If you set the refresh rate higher than 60 Hz, the maximum resolution might be limited.

Connect to a wireless display

To use a wireless display, ensure that both your computer and the external display support the Miracast® feature.

Press Windows logo key + K and then select a wireless display to connect with.

Set the display mode

Press or + and then select a display mode of your preference.

Press or + and then select a display mode of your preference.

Change display settings

1. Right-click a blank area on the desktop and select display settings.
2. Select the display that you want to configure and change display settings of your preference.

You can change the settings for both the computer display and the external display. For example, you can define which one is the main display and which one is the secondary display. You also can change the resolution and orientation.

Chapter 3. Explore your computer

Lenovo apps

This section provides introduction to the Vantage and Lenovo Quick Clean apps.

The Vantage app

The preinstalled Vantage app is a customized one-stop solution to help you maintain your computer with automated updates and fixes, configure hardware settings, and get personalized support.

To access the Vantage app, type `Vantage` in the Windows search box.

Key features

The Vantage app enables you to:

- Know the device status easily and customize device settings.
- Download and install UEFI BIOS, firmware, and driver updates to keep your computer up-to-date.
- Monitor your computer health, and secure your computer against outside threats.
- Scan your computer hardware and diagnose hardware problems.
- Look up warranty status (online).
- Access *User Guide* and helpful articles.

Notes:

- The available features vary depending on the computer model.
- The Vantage app makes periodic updates of the features to keep improving your experience with your computer. The description of features might be different from that on your actual user interface.

AI Meeting Manager (for selected models)

AI Meeting Manager helps you to be more productive and efficient in intercultural meetings without language barriers. It converts voice to text, makes real-time translation (from voice to text), records audio speech and translated text to help you take meeting minutes.

Access the app

To access AI Meeting Manager, do one of the following:

- Open the **Start** menu and click **AI Meeting Manager**.
- Type `AI Meeting Manager` in the search box.

Translator/Subtitles

This function translates voice or audio into on-screen text in real time during meetings.

The subtitle function allows you to watch foreign videos with translated subtitle.

© Copyright Lenovo 2022

Voice-to-text

This function converts voice to text. Select any typable field (such as document editing area, web site browser input filed, and windows input bar) to input text using voice instead of typing.

Editor

After a meeting, all audio and translated text are saved in your computer. Open Editor and you can view the record. This function makes it easier to edit meeting minutes. You can copy, search, proofread, export, or delete text, and you also can delete or play audio back.

Notes:

- To download the latest version of AI Meeting Manager, go to Microsoft Store and search for the app name.
- The supported features and languages vary depending on the computer model and delivery of countries and regions.
- AI Meeting Manager makes periodic updates of the features to keep improving your experience. The description of features might be different from that on your actual user interface.

Lenovo Smart Appearance (for selected models)

Lenovo Smart Appearance is an intelligent camera enhancement and beautification app that helps you to enhance your looks in video calls. This app works with some mainstream video meeting apps, such as Microsoft Teams. Lenovo Smart Appearance enables you to blur/customize your background, smooth your skin effect, and beautify your face effect.

To access Lenovo Smart Appearance, type `Lenovo Smart Appearance` in the Windows search box.

Notes:

- The available features vary depending on the computer model.
- Lenovo Smart Appearance makes periodic updates of the features to keep improving your experience with your computer. The description of features might be different from that on your actual user interface.

Lenovo Quick Clean

Depending on the model, your computer might support the Lenovo Quick Clean feature. The preinstalled Lenovo Quick Clean enables you to temporarily disable the keyboard, screen, trackpad, and TrackPoint pointing device for cleaning.

To access Lenovo Quick Clean, do one of the following:

- Type `Lenovo Quick Clean` in the Windows search box.
- Press Fn and the right Shift key at the same time.

To download the latest version of Lenovo Quick Clean, go to https://pcsupport.lenovo.com.

Smart features (for selected models)

Your computer might be preinstalled with Glance by Mirametrix®. Glance can capture your head movement through camera and makes your computer smarter and more efficient.

Access Glance by Mirametrix

Type `Glance` in the Windows search box and then press Enter.

Note: If Glance is uninstalled, you can request it through https://support.lenovo.com/contactus.

Explore key features

Depending on the model, some features might not be available on your computer.

- **Protect privacy**
  - **Presence Detection**: Keep your computer awake when in use and automatically lock the computer when your head moves out of the camera range.

  - **Privacy Alert**: When a shoulder surfer is detected, an alert icon appears on your computer screen.

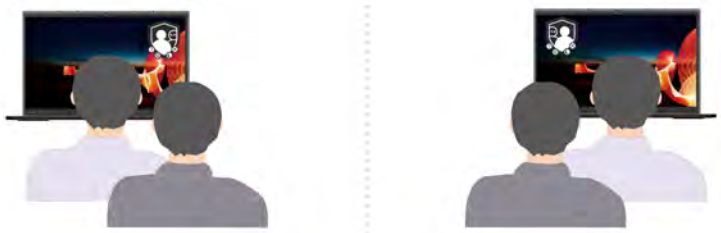

  - **Privacy Guard**: When a shoulder surfer is detected, your screen is blurred. Press Alt+F2 to cancel the blur effect.

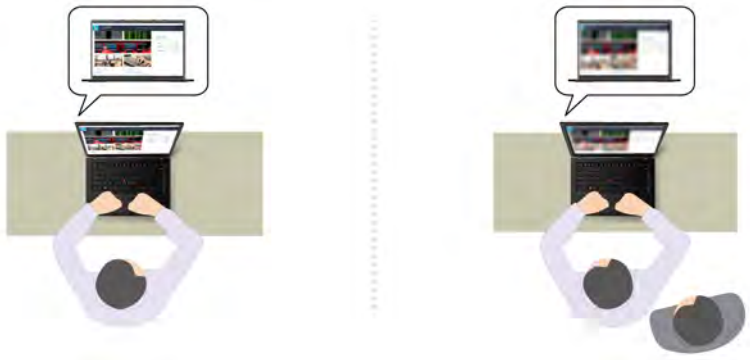

– **Smart Display**: Blur screens you are not looking at. If you are not facing any screen, all screens are blurred. Press Alt+F2 to cancel the blur effect.

Note: If your computer comes with an ePrivacy screen, it can work with Glance to achieve better privacy protection. For details, go to https://support.lenovo.com/us/en/videos/vid500144.

- **Improve productivity**
  – **Snap Window**: When you select a window on one screen and turn your face to another, the window automatically snaps to the top center of the screen you are facing.

  – **Smart Pointer**: Relocate the pointer to the screen you are facing. When the pointer moves from one screen to another, it is temporarily drawn large.

Note: Snap Window and Smart Pointer only work when your computer is connected to external displays. Ensure that external displays are placed at the same height of your computer.

- **Promote digital wellness**
  – **Posture check**: Remind you to adjust your posture once you hunch toward the screen.
  – **20/20/20 Alert**: Remind you to look away from the screen and relax your eyes for 20 seconds every 20 minutes.

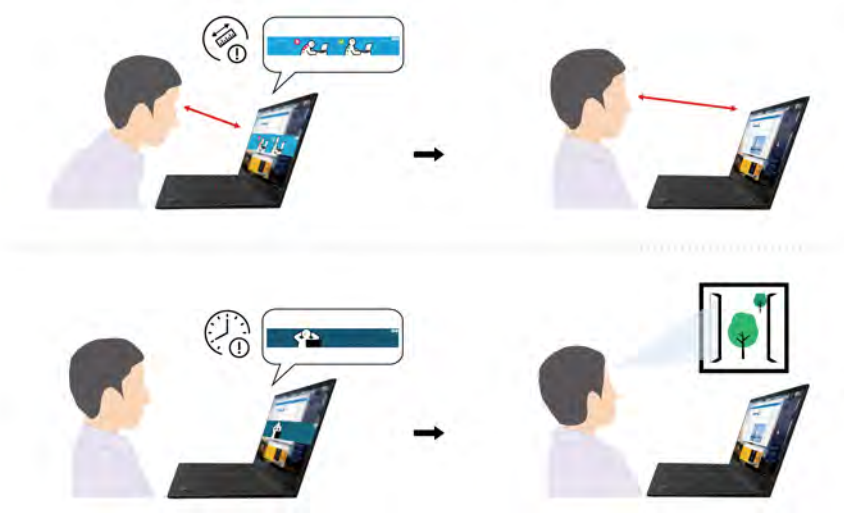

Color calibration (for selected models)

The factory color calibration feature is available on computer models preinstalled with the X-Rite Color Assistant program. This feature enables you to render color images or graphics on your display close to the original intent as much as possible.

For computer with the factory color calibration feature, the color profiles are preinstalled. You can switch between color profiles as desired:

1. Click the triangular icon in the Windows notification area to show hidden icons. Then, right-click .
2. Follow the on-screen instructions to select a profile as desired.

Lenovo provides backup color profiles in Lenovo Cloud. You might need to restore or install color profiles in the following situations:

- If any color profile is lost or damaged, a window will be displayed to remind you to restore the color profiles. Click **Yes** in the window prompted, and the color profiles will be restored from Lenovo Cloud automatically.
- If your display has been replaced by a Lenovo-authorized service provider, do the following to install new color profiles:
  1. Connect your computer to the network and close the X-Rite Color Assistant program.
  2. Go to `C:\Program files (x86)\X-Rite Color Assistant` and locate the ProfileUpdaterForDisplayReplacement.exe file.
  3. Double-click the EXE file. Then, follow the on-screen instructions to input the display serial number and click **Submit**.

  Note: When the new color profiles are installed successfully, a window will be displayed.
- If you install a new operating system, do the following to reinstall the color profiles:
  1. Connect your computer to the network and open the preinstalled X-Rite Color Assistant app.

     Note: If the app is uninstalled, reinstall it by downloading the installation package from https://pcsupport.lenovo.com/us/en/downloads/DS543953
  2. Go to **Settings → Restore profiles**. The app will download and install its unique color profiles from Lenovo cloud automatically.

Intelligent cooling

The Intelligent Cooling feature helps you adjust fan speed, computer temperature and performance. This feature works in auto mode by default. Press Fn+T to switch between manual mode and auto mode.

Manual mode

- Quiet mode: the least fan speed
- Balanced mode: balanced performance and fan speed
- Performance mode: the highest performance and normal fan speed

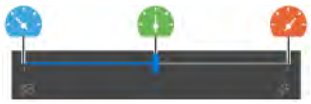

on ac power

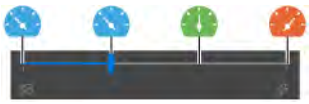

on battery power

Do the following to select the preferred mode:

1. Click the battery status icon in the Windows notification area.
2. Move the slider to the left or right to select your preferred mode.

Auto mode

- Auto battery mode: Switch between quiet mode and battery mode automatically based on the amount of system activity.
- Auto performance mode: Switch among quiet mode, balanced mode and performance mode automatically based on the amount of system activity.

Manage power

Use the information in this section to achieve the best balance between performance and power efficiency.

Check the battery status

Click the battery icon in the Windows notification area to check the battery status, view the current power plan, change the power mode, and access battery settings quickly. For more details about your battery, refer to the Vantage app.

Charge the computer

Use ac power

Power source of the ac power adapter:

- Power: 65 W, 100 W, or 135 W (depending on the model)
- Sine-wave input at 50 Hz to 60 Hz
- Input rating of the ac power adapter: 100 V to 240 V ac, 50 Hz to 60 Hz

When the battery power is low, charge your battery by connecting your computer to ac power with the supplied power adapter. The 65 W ac power adapter supports the rapid charge function, the battery is 80% charged in about one hour when the computer is turned off. The actual charging time depends on the battery size, the physical environment, and whether you are using the computer.

Notes: To maximize the life of the battery:

- Use the battery until the charge is depleted and recharge the battery completely before using it. Once the battery is fully charged, it must discharge to 94% or lower before it will be allowed to recharge again.
- The battery may optimize its full charge capacity based on your usage. After prolonged periods of limited use, full battery capacity may not be available until you discharge to as low as 20% and recharge completely. For more information, refer to the power section of the Vantage app.

Use P-to-P 2.0 (Peer to Peer 2.0) charging function

Both USB-C (Thunderbolt 3) connectors on the computer feature the Lenovo-unique P-to-P 2.0 charging function. To use the function, ensure that **Always On USB** and **Charge in Battery Mode** are enabled in UEFI BIOS of your computers, so that the function works even when the computers are off or in hibernation mode.

To enable **Always On USB** and **Charge in Battery Mode**:

1. Press F1 to enter the UEFI BIOS menu.
2. Click **Config** → **USB**, and then to enable **Always On USB** and **Charge in Battery Mode**.

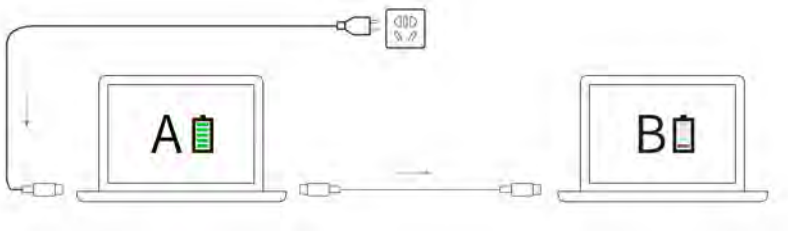

Note: The actual charging speed of your computer depends on many factors, such as the remaining battery power of the computers, the wattage of the ac power adapter, and whether you are using the computers.

Change the power settings

For ENERGY STAR® compliant computers, the following power plan takes effect when your computer has been idle for a specified duration:

- Turn off the display: After 10 minutes
- Put the computer to sleep: After 30 minutes

To reset the power plan:

1. Right-click the battery status icon and select **Power Options**.
2. Choose or customize a power plan of your preference.

To reset the power button function:

1. Right-click the battery status icon and select **Power Options → Change what the power buttons do**.
2. Change the settings as you prefer.

Transfer data

Quickly share your files using the built-in Bluetooth or NFC technology among devices with the same features. You also can insert a microSD card or smart card to transfer data.

Set up a Bluetooth connection

You can connect all types of Bluetooth-enabled devices to your computer, such as a keyboard, a mouse, a smartphone, or speakers. To ensure successful connection, place the devices at most 10 meters (33 feet) from the computer.

1. Type `Bluetooth` in the Windows search box and then press Enter.
2. Turn on Bluetooth, if it is off.
3. Select a Bluetooth device, and then follow the on-screen instructions.

Use an SD card (for ThinkPad Z16 Gen 1 only)

You can insert an SD card to transfer data.

Install or remove an SD card

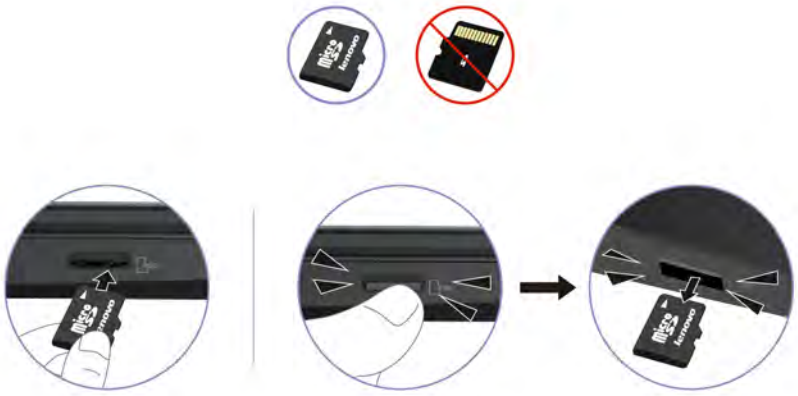

Attention: Before removing the card:

1. Click the triangular icon in the Windows notification area to show hidden icons. Right-click the icon prompting you to safely remove hardware and eject media.
2. Select the corresponding item to eject the card from the Windows operating system.
3. Press the card and remove it from your computer. Store the card safely for future use.

Accessories

This section provides instructions on how to use hardware accessories to expand your computer functionalities.

Purchase accessories

Lenovo has a number of hardware accessories and upgrades to help expand the functionalities of your computer. Options include memory modules, storage devices, network cards, port replicators or docking stations, batteries, power adapters, keyboards, mice, and more.

To shop at Lenovo, go to https://www.lenovo.com/accessories.

Chapter 4. Secure your computer and information

Lock the computer

Lock your computer to a desk, table, or other fixtures through a compatible security cable lock.

Note: You are responsible for evaluating, selecting, and implementing the locking device and security feature. Lenovo is not responsible for the locking device and security feature. You can purchase the cable locks at https://smartfind.lenovo.com.

Lock your computer to a desk, table, or other fixtures through a compatible security cable lock.

Note: The slot supports cable locks that conform to the Kensington MiniSaver® lock standards using Cleat™ locking technology. You are responsible for evaluating, selecting, and implementing the locking device and security feature. Lenovo is not responsible for the locking device and security feature. You can purchase the cable locks at https://smartfind.lenovo.com.

© Copyright Lenovo 2022

Lock your computer to a desk, table, or other fixtures through a compatible security cable lock.

Note: The slot supports cable locks that conform to the Kensington MicroSaver® lock standards (using T-bar™ locking technology) or MiniSaver® lock standards (using Cleat™ locking technology). You are responsible for evaluating, selecting, and implementing the locking device and security feature. Lenovo is not responsible for the locking device and security feature. You can purchase the cable locks at https://smartfind.lenovo.com.

Log in with your fingerprint

The fingerprint reader is integrated with the power button. After enrolling your fingerprint, you can power on and log in to the computer with a simple press on the power button, or unlock the screen with a single touch. It eliminates the need to enter complex passwords, saving your time and boosting your productivity.

1. Type `Sign-in options` in the Windows search box and then press Enter.
2. Select the fingerprint setting and then follow the on-screen instruction to enroll your fingerprint.

   Note: It is recommended that you put your finger at the middle of the fingerprint reader during enrollment and enroll more than one fingerprint in case of any injuries to your fingers. After the enrollment, the fingerprints are associated with the Windows password automatically.
3. Log in with your fingerprint. When the fingerprint reader indicator is solid green, tap your finger on the fingerprint reader for authentication.

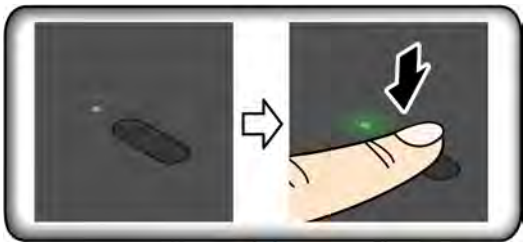

Enroll your fingerprints and unlock computer by scanning your fingerprints on the fingerprint reader.

1. Type `Sign-in options` in the Windows search box and then press Enter.
2. Select the fingerprint setting and then follow the on-screen instruction to enroll your fingerprint.

   Note: It is recommended that you put your finger at the middle of the fingerprint reader during enrollment and enroll more than one fingerprint in case of any injuries to your fingers. After the enrollment, the fingerprints are associated with the Windows password automatically.
3. Log in with your fingerprint.

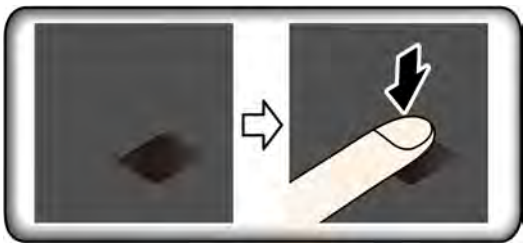

Associate your fingerprints with UEFI BIOS passwords

You can associate your fingerprints with your power-on password and hard disk password. See “Associate your fingerprints with passwords (for selected models)” on page 37.

Maintenance tips:

- Do not scratch the surface of the reader with anything hard.
- Do not use or touch the reader with a wet, dirty, wrinkled, or injured finger.

Log in with your face ID (for selected models)

For models come with a webcam privacy shutter, slide the webcam privacy shutter to uncover the camera lens before using the Windows Hello face recognition.

Create your face ID and unlock your computer by scanning your face:

1. Type `Sign-in options` in the Windows search box and then press Enter.
2. Select the face ID setting and then follow the on-screen instruction to create your face ID.

Detect human presence (for selected models)

Your computer supports the human presence detection function.

- Wake up the computer when you are approaching it. With a face ID created, your computer can recognize your face and log in to the system automatically. You need to face the camera and be at most 1.4 meters (4.6 feet) from the computer. The function does not work when your computer is in hibernation mode or has been turned off.
- Dim the display and lock the computer when you are leaving. The function does not work if you set the power options to never turn off the display.

The human presence sensor is enabled by default. To change the settings:

- Open the Vantage app, and then click **Device → Smart Assist** to turn on or turn off the **User Presence Sensing** switch. Customize the **Zero Touch Login** and **Zero Touch Lock** settings according to your preference.
- Restart the computer. When the logo screen is displayed, press F1 to enter the UEFI BIOS menu. Select **Security → Intelligent Security** to customize detailed settings.

Notes:

- These features might not work when your computer is in tent, tablet, or stand mode.
- If the Airplane mode is enabled, human presence detection is disabled.
- Your computer uses a human presence sensor to detect your presence and the IR camera to recognize your face. Lenovo does not collect any personal data.
- For some countries or regions, the human presence sensor is disabled according to local regulations.

Protect your privacy (for selected models)

Use the ePrivacy screen

Your computer might come with an ePrivacy screen. It can reduce screen visibility from side angles to protect screen content against visual hacking. By default, this function is disabled. You can press F12 or Fn +D to enable it. You will be prompted by the on-screen icon ▨ or ▨ every time the function is enabled or disabled.

Your ePrivacy screen can be automatically enabled in case that you are required to input passwords. By default, this automatic function for passwords is disabled. You can enable it on the Vantage app.

The ePrivacy screen also can work with the preinstalled Glance app to better protect your privacy. For details, go to https://support.lenovo.com/us/en/videos/vid500144.

Set the privacy level

The privacy level of this function varies depending on the screen brightness level, the contrast ratio, and the physical environment where you are using this function.

- Press to increase the privacy level.
- Press to decrease the privacy level.

Protect data against power loss (for selected models)

NVMe (Non-Volatile Memory express) M.2 solid-state drive features the Lenovo-unique PLP (Power Loss Protection) function to avoid data loss or damage. If your computer is not responding and you might have to shut down your computer by pressing and holding the power button for several seconds. In this case, the PLP function enables your computer data to be saved timely. However, there is no guarantee that all data is saved in any situation. To check the type of your M.2 solid-state drive:

1. Restart the computer. When the logo screen is displayed, press F10 to enter the Lenovo diagnostics window.
2. On the TOOLS tab, select **SYSTEM INFORMATION → STORAGE** using the arrow keys.
3. Locate the **Device Type** section to check the information

UEFI BIOS passwords

You can set passwords in UEFI (Unified Extensible Firmware Interface) BIOS (Basic Input/Output System) to strengthen the security of your computer.

Password types

You can set a power-on password, supervisor password, system management password, or hard disk password in UEFI BIOS to prevent unauthorized access to your computer. However, you are not prompted to enter any UEFI BIOS password when your computer resumes from sleep mode.

Power-on password

If you set a power-on password, a window is displayed on the screen when you turn on the computer. Enter the correct password to use the computer.

Supervisor password

The supervisor password protects the system information stored in UEFI BIOS. When entering the UEFI BIOS menu, enter the correct supervisor password in the window prompted. You also can press Enter to skip the password prompt. However, you cannot change most of the system configuration options in UEFI BIOS.

If you have set both the supervisor password and power-on password, you can use the supervisor password to access your computer when you turn it on. The supervisor password overrides the power-on password.

System management password

The system management password can also protect the system information stored in UEFI BIOS like a supervisor password, but it has lower authority by default. The system management password can be set through the UEFI BIOS menu or through Windows Management Instrumentation (WMI) with the Lenovo client-management interface.

You can enable the system management password to have the same authority as the supervisor password to control security-related features. To customize the authority of the system management password through the UEFI BIOS menu:

1. Restart the computer. When the logo screen is displayed, press F1 to enter the UEFI BIOS menu.
2. Select **Security → Password → System Management Password Access Control**.

3. Follow the on-screen instructions.

If you have set both the supervisor password and the system management password, the supervisor password overrides the system management password. If you have set both the system management password and the power-on password, the system management password overrides the power-on password.

Hard disk passwords

The hard disk password prevents unauthorized access to the data on the storage drive. When a hard disk password is set, you are prompted to type a correct password each time you try to access the storage drive.

- **User hard disk password only**

  When a user hard disk password is set without a master hard disk password, the user must enter the user hard disk password to access files and applications on the storage drive.
- **Master hard disk password + User hard disk password**

  The master hard disk password is set and used by a system administrator. It enables the administrator to access any storage drive in a system or any computer connected in the same network. The administrator can also assign a user hard disk password for each computer in the network. The user of the computer can change the user hard disk password as desired, but only the administrator can remove the user hard disk password.

When prompted to enter a hard disk password, press F1 to switch between the master hard disk password and user hard disk password.

Notes: The hard disk password is not available in the following situations:

- A Trusted Computing Group (TCG) Opal-compliant storage drive and a TCG Opal management software program are installed in the computer, and the TCG Opal management software program is activated.
- An eDrive storage drive is installed in the computer preinstalled with the Windows operating system.

Set, change, or remove a password

Before you start, print these instructions.

1. Restart the computer. When the logo screen is displayed, press F1 to enter the UEFI BIOS menu.
2. Select **Security → Password** by using the arrow keys.
3. Select the password type. Then, follow the on-screen instructions to set, change, or remove a password.

You should record all your passwords and store them in a safe place. If you forget any of your passwords, any potential repair actions required are not covered under warranty.

What to do if you forget your power-on password

If you forget your power-on password, do the following to remove the power-on password:

- If you have set a supervisor password or a system management password and remember it:
  1. Restart the computer. When the logo screen is displayed, immediately press F1.
  2. Type the supervisor password or the system management password to enter the UEFI BIOS menu.
  3. Select **Security → Password → Power-On Password** by using the arrow keys.
  4. Type the current supervisor password or the system management password in the **Enter Current Password** field. Then, leave the **Enter New Password** field blank, and press Enter twice.
  5. In the Changes have been saved window, press Enter.

6. Press F10 to save changes and exit the UEFI BIOS menu.

- If you have not set a supervisor password or a system management password, contact a Lenovo authorized service provider to have the power-on password removed.

What to do if you forget your system management password

If you forget your system management password, do the following to remove the system management password:

- If you have set a supervisor password and remember it:
  1. Restart the computer. When the logo screen is displayed, immediately press F1.
  2. Type the supervisor password to enter the UEFI BIOS menu.
  3. Select **Security → Password → System Management Password** by using the arrow keys.
  4. Type the current supervisor password in the **Enter Current Password** field. Then, leave the **Enter New Password** field blank, and press Enter twice.
  5. In the Changes have been saved window, press Enter.
  6. Press F10 to save changes and exit the UEFI BIOS menu.
- If you have not set a supervisor password, contact a Lenovo authorized service provider to have the system management password removed.

What to do if you forget your hard disk password

If you forget your user hard disk password or both user and master hard disk passwords, there is no service procedure to remove the password or recover data from the storage drive. You can contact a Lenovo authorized service provider to have the storage drive replaced. A fee will be charged for parts and service. If the storage drive is a CRU (Customer Replaceable Unit), you can also contact Lenovo to purchase a new storage drive to replace the old one by yourself. To check whether the storage drive is a CRU and the relevant replacement procedure, see Chapter 6 “CRU replacement” on page 43.

What to do if you forget your supervisor password

If you forget your supervisor password, there is no service procedure to remove the password. You can contact a Lenovo authorized service provider to have the system board replaced. A fee will be charged for parts and service.

Password types

You can set a power-on password, supervisor password, system management password, or NVMe password in UEFI BIOS to prevent unauthorized access to your computer. However, you are not prompted to enter any UEFI BIOS password when your computer resumes from sleep mode.

Power-on password

If you set a power-on password, a window is displayed on the screen when you turn on the computer. Enter the correct password to use the computer.

Supervisor password

The supervisor password protects the system information stored in UEFI BIOS. When entering the UEFI BIOS menu, enter the correct supervisor password in the window prompted. You also can press Enter to skip the password prompt. However, you cannot change most of the system configuration options in UEFI BIOS.

If you have set both the supervisor password and power-on password, you can use the supervisor password to access your computer when you turn it on. The supervisor password overrides the power-on password.

System management password

The system management password can also protect the system information stored in UEFI BIOS like a supervisor password, but it has lower authority by default. The system management password can be set through the UEFI BIOS menu or through Windows Management Instrumentation (WMI) with the Lenovo client-management interface.

You can enable the system management password to have the same authority as the supervisor password to control security-related features. To customize the authority of the system management password through the UEFI BIOS menu:

1. Restart the computer. When the logo screen is displayed, press F1 to enter the UEFI BIOS menu.
2. Select **Security → Password → System Management Password Access Control**.
3. Follow the on-screen instructions.

If you have set both the supervisor password and the system management password, the supervisor password overrides the system management password. If you have set both the system management password and the power-on password, the system management password overrides the power-on password.

NVMe passwords

The NVMe password prevents unauthorized access to the data on the storage drive. When an NVMe password is set, you are prompted to type a correct password each time you try to access the storage drive.

- **Single Password**

  When a Single NVMe password is set, the user must enter the user NVMe password to access files and applications on the storage drive.
- **Dual Password (User + Admin)**

  The admin NVMe password is set and used by a system administrator. It enables the administrator to access any storage drive in a system or any computer connected in the same network. The administrator can also assign a user NVMe password for each computer in the network. The user of the computer can change the user NVMe password as desired, but only the administrator can remove the user NVMe password.

When prompted to enter an NVMe password, press F1 to switch between the admin NVMe password and user NVMe password.

Notes: The NVMe password is not available in the following situations:

- A Trusted Computing Group (TCG) Opal-compliant storage drive and a TCG Opal management software program are installed in the computer, and the TCG Opal management software program is activated.
- An eDrive storage drive is installed in the computer preinstalled with the Windows operating system.

Set, change, and remove a password

Before you start, print these instructions.

1. Restart the computer. When the logo screen is displayed, press F1 to enter the UEFI BIOS menu.
2. Select **Security → Password** by using the arrow keys.
3. Select the password type. Then, follow the on-screen instructions to set, change, or remove a password.

You should record all your passwords and store them in a safe place. If you forget any of your passwords, any potential repair actions required are not covered under warranty.

What to do if you forget your power-on password

If you forget your power-on password, do the following to remove the power-on password:

- If you have set a supervisor password and remember it:
  1. Restart the computer. When the logo screen is displayed, immediately press F1.
  2. Type the supervisor password to enter the UEFI BIOS menu.
  3. Select **Security → Password → Power-On Password** by using the arrow keys.
  4. Type the current supervisor password in the **Enter Current Password** field. Then, leave the **Enter New Password** field blank, and press Enter twice.
  5. In the Changes have been saved window, press Enter.
  6. Press F10 to save changes and exit the UEFI BIOS menu.
- If you have not set a supervisor password, contact a Lenovo authorized service provider to have the power-on password removed.

What to do if you forget your NVMe password

If you forget your NVMe password (Single password) or both user and admin NVMe passwords (Dual password), Lenovo cannot reset your passwords or recover data from the storage drive. You can contact a Lenovo authorized service provider to have the storage drive replaced. A fee will be charged for parts and service. If the storage drive is a CRU (Customer Replaceable Unit), you can also contact Lenovo to purchase a new storage drive to replace the old one by yourself. To check whether the storage drive is a CRU and the relevant replacement procedure, see Chapter 6 “CRU replacement” on page 43.

What to do if you forget your supervisor password

If you forget your supervisor password, there is no service procedure to remove the password. You have to contact a Lenovo authorized service provider to have the system board replaced. A fee will be charged for parts and service.

What to do if you forget your system management password

If you forget your system management password, do the following to remove the system management password:

- If you have set a supervisor password and remember it:
  1. Restart the computer. When the logo screen is displayed, immediately press F1.
  2. Type the supervisor password to enter the UEFI BIOS menu.
  3. Select **Security → Password → System Management Password** by using the arrow keys.
  4. Type the current supervisor password in the **Enter Current Password** field. Then, leave the **Enter New Password** field blank, and press Enter twice.
  5. In the Changes have been saved window, press Enter.
  6. Press F10 to save changes and exit the UEFI BIOS menu.
- If you have not set a supervisor password, contact a Lenovo authorized service provider to have the system management password removed.

Associate your fingerprints with passwords (for selected models)

Do the following to associate your fingerprints with the power-on password and hard disk password:

1. Turn off and then turn on the computer.
2. When prompted, scan your finger on the fingerprint reader.
3. Enter your power-on password, hard disk password, or both as required. The association is established.

When you start the computer again, you can use your fingerprints to log in to the computer without entering your Windows password, power-on password, or hard disk password. To change settings, press F1 to enter the UEFI BIOS menu, and then select **Security → Fingerprint**.

Attention: If you always use your fingerprint to log in to the computer, you might forget your passwords. Write down your passwords, and keep them in a safe place.

Chapter 5. Configure advanced settings

UEFI BIOS

UEFI BIOS is the first program that the computer runs. When the computer turns on, UEFI BIOS performs a self test to make sure that various devices in the computer are functioning.

Enter the UEFI BIOS menu

Restart the computer. When the logo screen is displayed, press F1 to enter the UEFI BIOS menu.

Navigate in the UEFI BIOS interface

You can navigate in the UEFI BIOS interface by pressing the following keys:

- F1: General Help
- F9: Setup Defaults
- F10: Save and Exit
- F5 / F6: Change boot priority order
- ↑ ↓ or PgUp / PgDn: Select / Scroll page
- ← →: Move keyboard focus
- Esc: Back / Close dialog
- Enter: Select / Open submenu

Set the system date and time

1. Restart the computer. When the logo screen is displayed, press F1.
2. Select **Date/Time** and set the system date and time as desired.
3. Press F10 to save changes and exit.

Change the startup sequence

1. Restart the computer. When the logo screen is displayed, press F1.
2. Select **Startup → Boot**. Then, press Enter. The default device order list is displayed.

   Note: No bootable device is displayed if the computer cannot start from any devices or the operating system cannot be found.
3. Set the startup sequence as desired.
4. Press F10 to save the changes and exit.

To change the startup sequence temporarily:

1. Restart the computer. When the logo screen is displayed, press F12.
2. Select the device that you want the computer to start from and press Enter.

Update UEFI BIOS

When you install a new program, device driver, or hardware component, you might need to update UEFI BIOS.

© Copyright Lenovo 2022

Download and install the latest UEFI BIOS update package by one of the following methods:

- Open the Vantage app to check the available update packages. If the latest UEFI BIOS update package is available, follow the on-screen instructions to download and install the package.
- Go to https://pcsupport.lenovo.com and select the entry for your computer. Then, follow the on-screen instructions to download and install the latest UEFI BIOS update package.

To know more about UEFI BIOS, visit Knowledge Base of your computer at https://pcsupport.lenovo.com.

Install a Windows operating system and drivers

This section provides instructions on installing a Windows operating system and device drivers.

Install a Windows operating system

Microsoft constantly makes updates to the Windows operating system. Before installing a particular Windows version, check the compatibility list for the Windows version. For details, go to https://support.lenovo.com/us/en/solutions/windows-support.

Attention:

- It is recommended that you update your operating system through official channels. Any unofficial update might cause security risks.
- The process of installing a new operating system deletes all the data on your internal storage drive, including the data stored in a hidden folder.

1. If you are using the Windows BitLocker® Drive Encryption feature and your computer has a Trusted Platform Module, ensure that you have disabled the feature.
2. Ensure that the security chip is set to **Active**.
   a. Restart the computer. When the logo screen is displayed, press F1 to enter the UEFI BIOS menu.
   b. Select **Security** → **Security Chip** and press Enter. The **Security Chip** submenu opens.
   c. Ensure that the security chip for TPM 2.0 is set to **Active**.
   d. Press F10 to save the settings and exit.
3. Connect the drive that contains the operating system installation program to the computer.
4. Restart the computer. When the logo screen is displayed, press F1 to enter the UEFI BIOS menu.
5. Select **Startup** → **Boot** to display the **Boot Priority Order** submenu.
6. Select the drive that contains the operating system installation program, for example, **USB HDD**. Then, press Esc.

   Attention: After you change the startup sequence, ensure that you select the correct device during a copy, a save, or a format operation. If you select the wrong device, the data on that device might be erased or overwritten.
7. Select **Restart** and ensure that **OS Optimized Defaults** is enabled. Then, press F10 to save the settings and exit.
8. Follow the on-screen instructions to install the device drivers and necessary programs.
9. After installing the device drivers, apply Windows Update to get the latest updates, for example the security patches.

Install device drivers

You should download the latest driver for a component when you notice poor performance from that component or when you added a component. This action might eliminate the driver as the potential cause of a problem. Download and install the latest driver by one of the following methods:

- Open the Vantage app to check the available update packages. Select the update packages you want, and then follow the on-screen instructions to download and install the packages.
- Go to https://pcsupport.lenovo.com and select the entry for your computer. Then, follow the on-screen instructions to download and install necessary drivers and software.

Chapter 6. CRU replacement

Customer Replaceable Units (CRUs) are parts that can be upgraded or replaced by the customer. The computers contain the following types of CRUs:

- **Self-service CRUs**: Refer to parts that can be installed or replaced easily by customer themselves or by trained service technicians at an additional cost.
- **Optional-service CRUs**: Refer to parts that can be installed or replaced by customers with a greater skill level. Trained service technicians can also provide service to install or replace the parts under the type of warranty designated for the customer's machine.

If you intend on installing a CRU, Lenovo will ship the CRU to you. CRU information and replacement instructions are shipped with your product and are available from Lenovo at any time upon request. You might be required to return the defective part that is replaced by the CRU. When return is required: (1) return instructions, a prepaid shipping label, and a container will be included with the replacement CRU; and (2) you might be charged for the replacement CRU if Lenovo does not receive the defective CRU within thirty (30) days of your receipt of the replacement CRU. For full details, see the Lenovo Limited Warranty documentation at https://www.lenovo.com/warranty/llw_02.

CRU list

The following is a list of CRUs of your computer.

Self-service CRUs

- ac power adapter
- Power cord
- Removable battery
- ThinkPad Pen Pro*

Optional-service CRUs

- Base cover assembly
- Coin-cell battery
- Keyboard
- Memory module
- Storage drive
- Wireless LAN card

  Note: The wireless LAN card in your computer is preinstalled by Lenovo, and you are prohibited from replacing it with another wireless module or removing it. If the device requires replacement due to some problem during warranty, it must be serviced by a Lenovo authorized service personnel.
- Wireless WAN card*

* for selected models

Note: Replacement of any parts not listed above, including the built-in rechargeable battery, must be done by a Lenovo-authorized repair facility or technician. Go to https://support.lenovo.com/partnerlocation for more information.

© Copyright Lenovo 2022

Disable Fast Startup and the built-in battery

Before replacing any CRU, ensure that you disable Fast Startup first and then disable the built-in battery.

To disable Fast Startup:

1. Go to **Control Panel** and view by Large icons or Small icons.
2. Click **Power Options**, and then click **Choose what the power buttons do** on the left pane.
3. Click **Change settings that are currently unavailable** at the top.
4. If prompted by User Account Control (UAC), click **Yes**.
5. Clear the **Turn on fast startup** check box, and then click **Save changes**.

To disable the built-in battery:

1. Restart your computer. When the logo screen is displayed, immediately press F1 to enter the UEFI BIOS menu.
2. Select **Config → Power**. The **Power** submenu is displayed.
3. Select **Disable Built-in Battery** and press Enter.
4. Select **Yes** in the Setup Confirmation window. The built-in battery is disabled and the computer turns off automatically. Wait three to five minutes to let the computer cool.

Replace a CRU

Follow the replacement procedure to replace a CRU.

Removable battery

Prerequisite

Before you start, read *Generic Safety and Compliance Notices* and print the following instructions.

This system supports only batteries specially designed for this specific system and manufactured by Lenovo or an authorized builder. The system does not support unauthorized batteries or batteries designed for other systems. If an unauthorized battery or a battery designed for another system is installed, the system does not charge and the following message is displayed:

"The battery installed is not supported by this system and will not charge. Replace the battery with the correct Lenovo battery for this system."

Attention: Lenovo has no responsibility for the performance or safety of unauthorized batteries, and provides no warranties for failures or damage arising out of their use.

DANGER

If the rechargeable battery is incorrectly replaced, there is danger of an explosion. The battery contains a small amount of harmful substances. To avoid possible injury:

- **Replace only with a battery of the type recommended by Lenovo.**
- **Keep the battery away from fire.**
- **Do not expose it to excessive heat.**
- **Do not expose it to water or rain.**
- **Do not short-circuit it.**
- **Do not drop, crush, puncture, or subject to strong forces. Battery abuse or mishandling can cause the battery to overheat, which can cause gasses or flame to "vent" from the battery.**

For access, do the following:

1. Disable the built-in battery. See “Disable Fast Startup and the built-in battery” on page 44.
2. Turn off the computer and disconnect the computer from ac power and all connected cables.
3. Close the computer display and turn the computer over.

Removal procedure

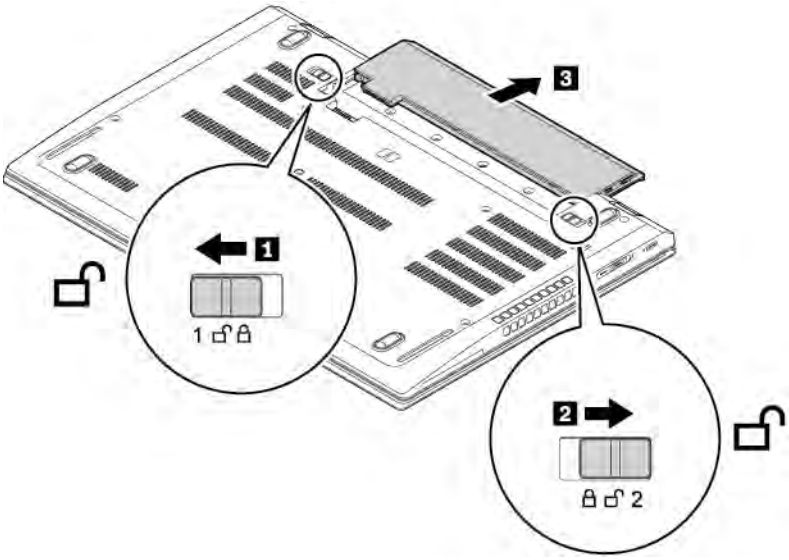

Base cover assembly

Prerequisite

Before you start, read *Generic Safety and Compliance Notices* and print the following instructions.

Notes: Do not remove the base cover assembly in the following situations. Otherwise, there might be a risk of short circuits.

- When your computer has the removable battery installed
- When your computer is connected to ac power

For access, do the following:

1. Disable the built-in battery. See “Disable Fast Startup and the built-in battery” on page 44.
2. Turn off the computer and disconnect the computer from ac power and all connected cables.
3. Close the computer display and turn over the computer.
4. Remove the removable battery. See “Removable battery” on page 44.

Removal procedure

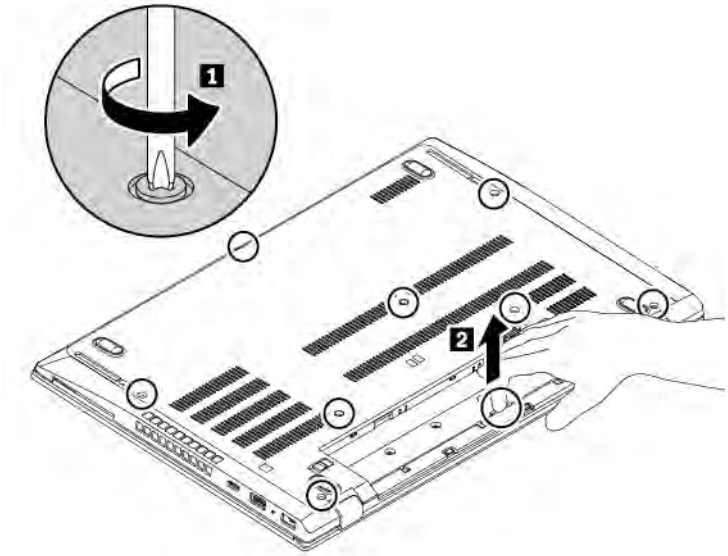

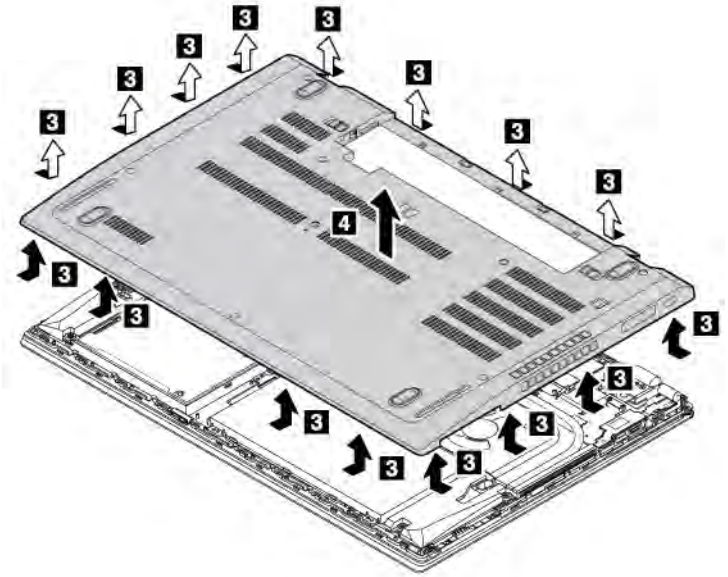

Installation procedure

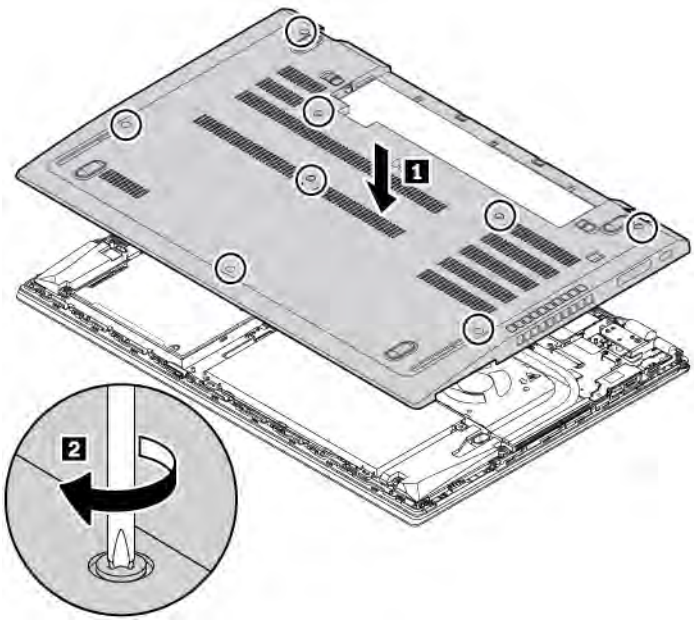

Troubleshooting

If the computer does not start up after you reinstall the base cover assembly, disconnect the ac power adapter and then reconnect it to the computer.

Wireless WAN card (for selected models)

The following information is only for the computer with user-installable modules.

The following information is only for the computer with user-installable modules. Ensure that you use only a Lenovo-authorized wireless module specifically tested for this computer model. Otherwise, the computer will generate an error-code beep sequence when you turn on the computer.

Prerequisite

Before you start, read *Generic Safety and Compliance Notices* and print the following instructions.

Attention: Do not touch the contact edge of the wireless WAN card. Otherwise, the wireless WAN card might get damaged.

For access, do the following:

1. Disable the built-in battery. See “Disable Fast Startup and the built-in battery” on page 44.
2. Turn off the computer and disconnect the computer from ac power and all connected cables.
3. Close the computer display and turn the computer over.
4. Remove the removable battery. See “Removable battery” on page 44.
5. Remove the base cover assembly. See “Base cover assembly” on page 45.

Removal procedure

Note: A Mylar film might cover the wireless WAN card. To access the wireless WAN card, peel off the film first.

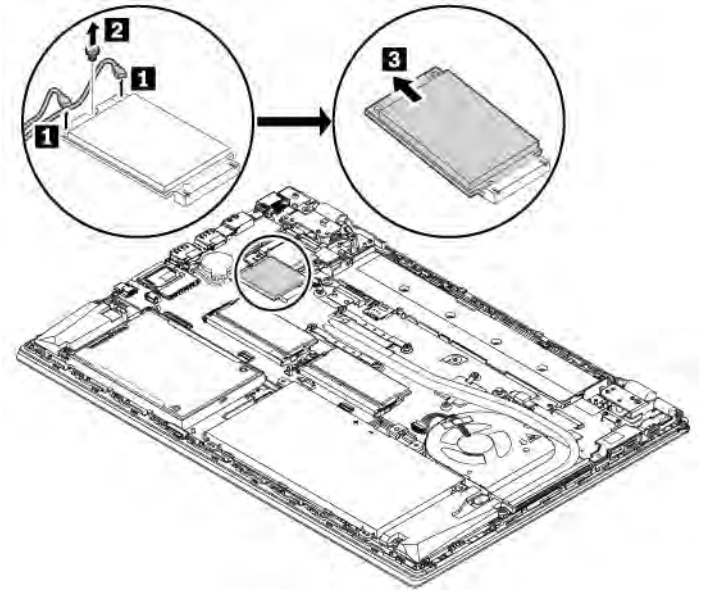

Memory module

Prerequisite

Before you start, read *Generic Safety and Compliance Notices* and print the following instructions.

Attention: Do not touch the contact edge of the memory module. Otherwise, the memory module might get damaged.

For access, do the following:

1. Disable the built-in battery. See “Disable Fast Startup and the built-in battery” on page 44.
2. Turn off the computer and disconnect the computer from ac power and all connected cables.
3. Close the computer display and turn the computer over.
4. Remove the removable battery. See “Removable battery” on page 44.
5. Remove the base cover assembly. See “Base cover assembly” on page 45.

Removal procedure

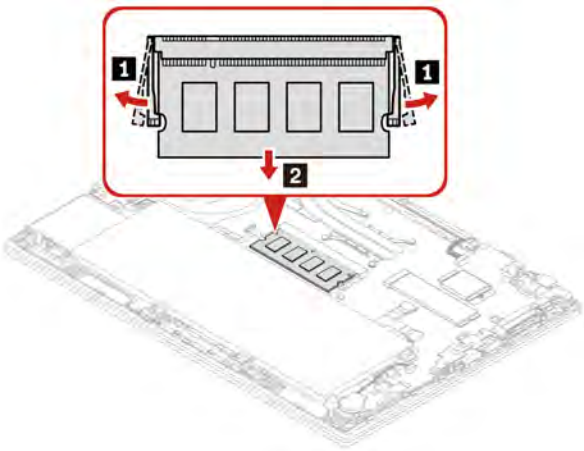

Installation procedure

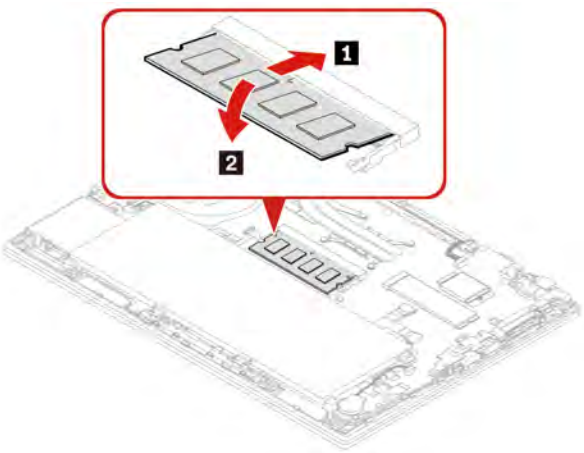

Internal storage drive

Prerequisite

Before you start, read *Generic Safety and Compliance Notices* and print the following instructions.

Attention: The internal storage drive is sensitive. Inappropriate handling might cause damage and permanent loss of data.

When handling the internal storage drive, observe the following guidelines:

- Replace the internal storage drive only for upgrade or repair. The internal storage drive is not designed for frequent changes or replacement.
- Before replacing the internal storage drive, make a backup copy of all the data that you want to keep.
- Do not touch the contact edge of the internal storage drive. Otherwise, the internal storage drive might get damaged.
- Do not apply pressure to the internal storage drive.
- Do not make the internal storage drive subject to physical shocks or vibration. Put the internal storage drive on a soft material, such as cloth, to absorb physical shocks.

For access, do the following:

1. Disable the built-in battery. See “Disable Fast Startup and the built-in battery” on page 44.
2. Turn off the computer and disconnect the computer from ac power and all connected cables.
3. Close the computer display and turn the computer over.
4. Remove the removable battery. See “Removable battery” on page 44.
5. Remove the base cover assembly. See “Base cover assembly” on page 45.

Removal procedure

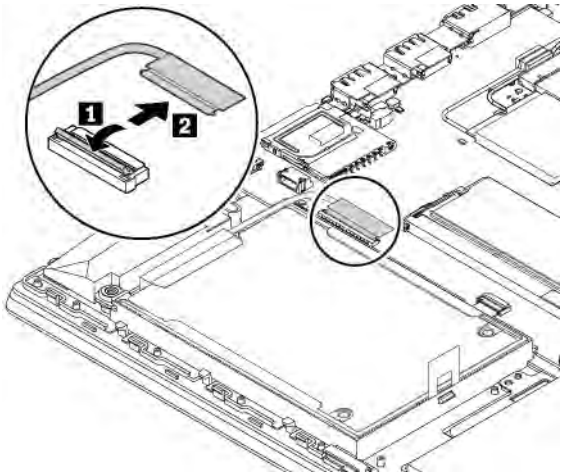

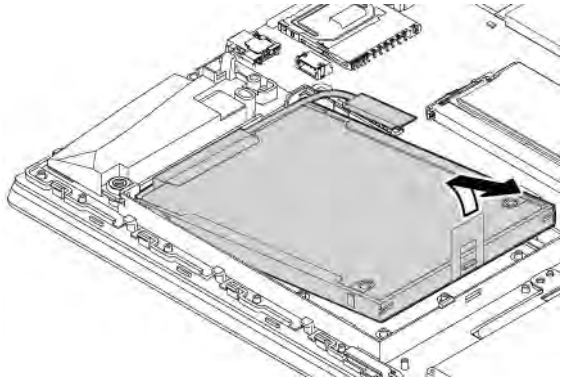

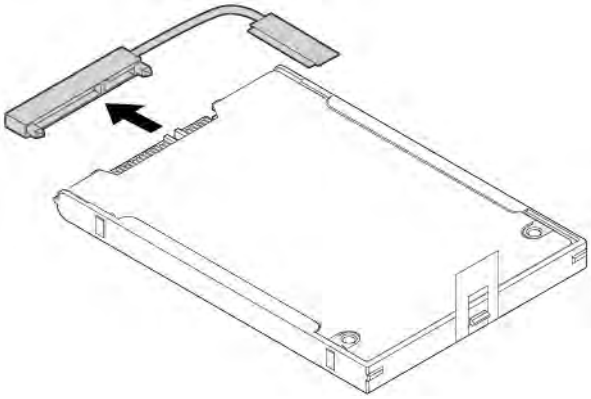

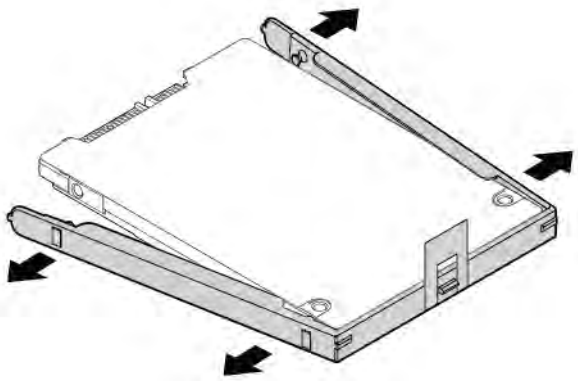

2242 M.2 solid-state drive

Prerequisite

Before you start, read *Generic Safety and Compliance Notices* and print the following instructions.

Attention:

- If you replace a M.2 solid-state drive, you might need to install a new operating system. For details on how to install a new operating system, see “” on page .
- If your computer is installed with the color profiles, you need to reinstall the color profiles after installing a new operating system, see “Use the factory color calibration feature (for selected models)” on page 23.
- If your computer is installed with a hybrid solid-state drive (with Intel Optane memory), go to https://support.lenovo.com/docs/tg_ssd to know the details on how to replace it.

The M.2 solid-state drive is sensitive. Inappropriate handling might cause damage and permanent loss of data.

When handling the M.2 solid-state drive, observe the following guidelines:

- Replace the M.2 solid-state drive only for upgrade or repair. The M.2 solid-state drive is not designed for frequent changes or replacement.
- Before replacing the M.2 solid-state drive, make a backup copy of all the data that you want to keep.
- Do not apply pressure to the M.2 solid-state drive.
- Do not touch the contact edge or circuit board of the M.2 solid-state drive. Otherwise, the M.2 solid-state drive might get damaged.
- Do not make the M.2 solid-state drive subject to physical shocks or vibration. Put the M.2 solid-state drive on a soft material, such as cloth, to absorb physical shocks.

Your computer has two M.2-solid-state-drive slots. When you configure the M.2-solid-state-drive slot in the UEFI BIOS menu, ensure that you select the correct menu item.

- Slot a: **ATA HDD2** or **NVMe0**
- Slot b: **ATA HDD3** or **NVMe1**

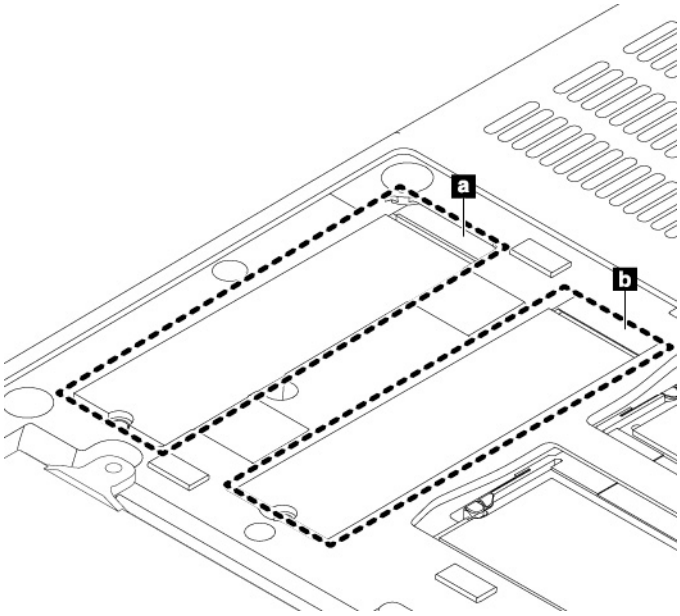

For access, do the following:

1. Disable the built-in battery. See “Disable Fast Startup and the built-in battery” on page 44.
2. Turn off the computer and disconnect the computer from ac power and all connected cables.
3. Close the computer display and turn the computer over.
4. Remove the bottom cover. See “Base cover assembly” on page 45.

Removal procedure

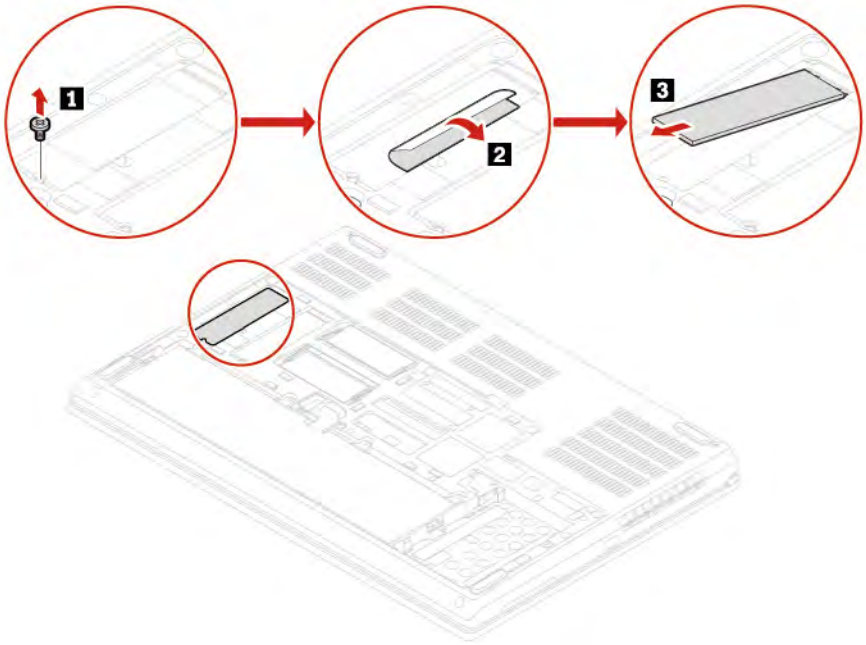

Speaker assembly

Prerequisite

Before you start, read *Generic Safety and Compliance Notices* and print the following instructions.

For access, do the following:

1. Disable the built-in battery. See “Disable Fast Startup and the built-in battery” on page 44.
2. Turn off the computer and disconnect the computer from ac power and all connected cables.
3. Close the computer display and turn the computer over.
4. Remove the removable battery. See “Removable battery” on page 44.
5. Remove the base cover assembly. See “Base cover assembly” on page 45.

Removal procedure

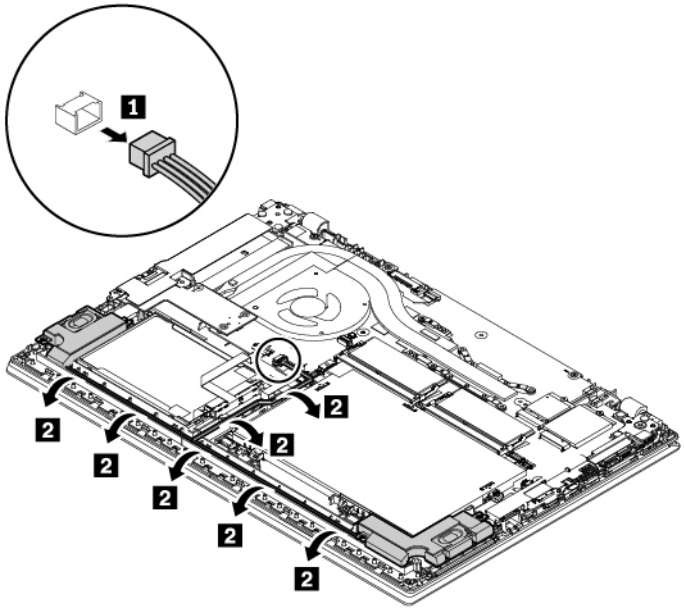

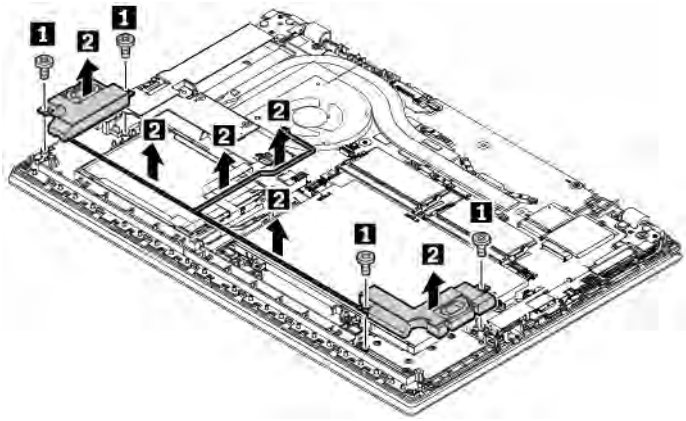

Coin-cell battery

Prerequisite

Before you start, read *Generic Safety and Compliance Notices* and print the following instructions.

For access, do the following:

1. Disable the built-in battery. See “Disable Fast Startup and the built-in battery” on page 44.
2. Turn off the computer and disconnect the computer from ac power and all connected cables.
3. Close the computer display and turn the computer over.
4. Remove the removable battery. See “Removable battery” on page 44.
5. Remove the base cover assembly. See “Base cover assembly” on page 45.

Removal procedure

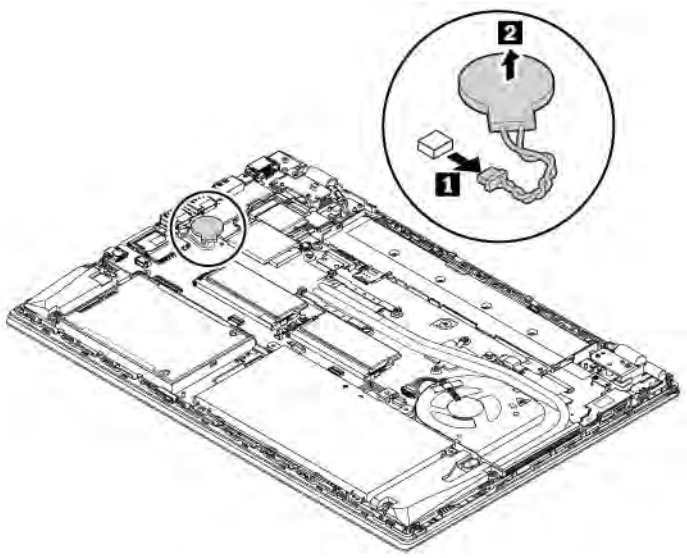

Keyboard

Prerequisite

Before you start, read *Generic Safety and Compliance Notices* and print the following instructions.

For access, do the following:

1. Disable the built-in battery. See “Disable Fast Startup and the built-in battery” on page 44.
2. Turn off the computer and disconnect the computer from ac power and all connected cables.

Removal procedure

Note: You might be instructed to slide the keyboard frame forward or backward in some of the following steps. In this case, ensure that you do not press or hold the keys while sliding the keyboard frame. Otherwise, the keyboard frame cannot be moved.

1. Take the tool out of the new keyboard package. Insert the tabs **a** and **b** into the slot between the TrackPoint buttons and the trackpad **1**. Slightly pivot the tool downward **2** to release the left and right TrackPoint buttons. Then, remove the two Trackpoint buttons **3**.

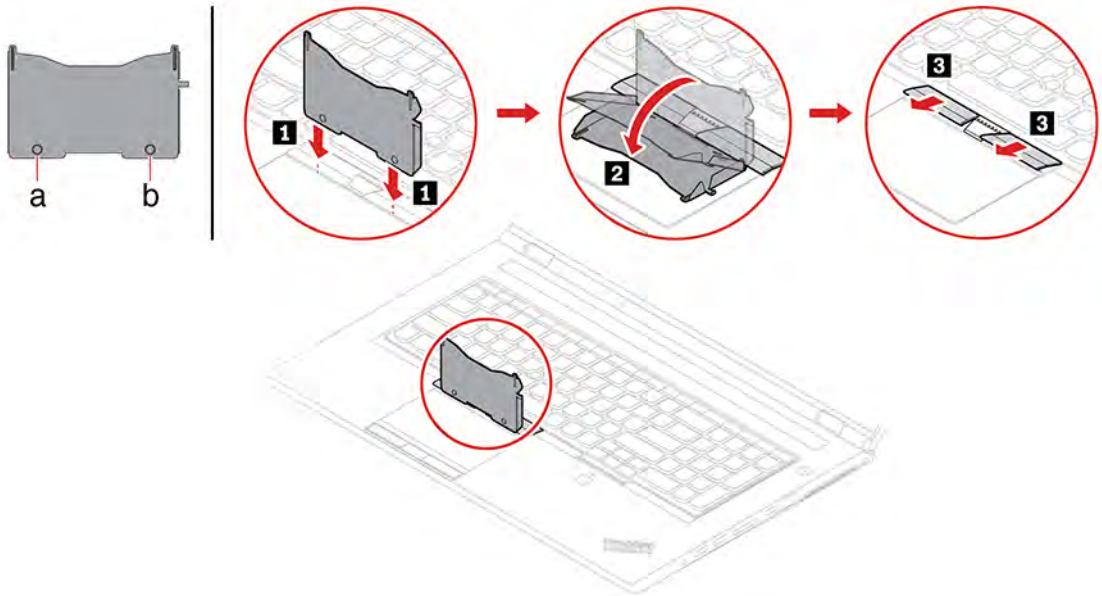

2. Loosen the screws that secure the keyboard.

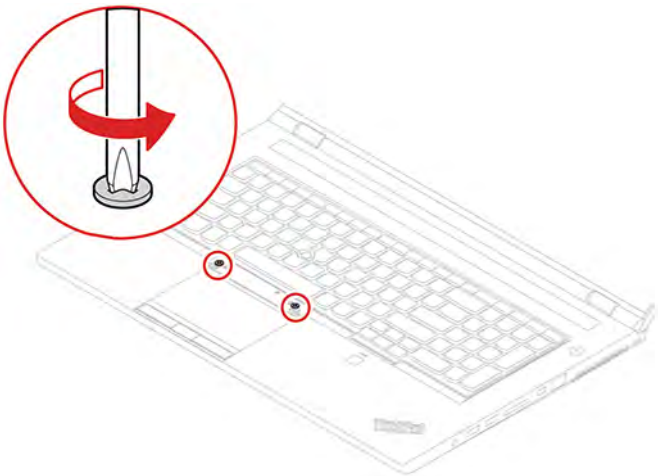

3. Insert the tabs c and d into the two dents near the two screw heads as shown.

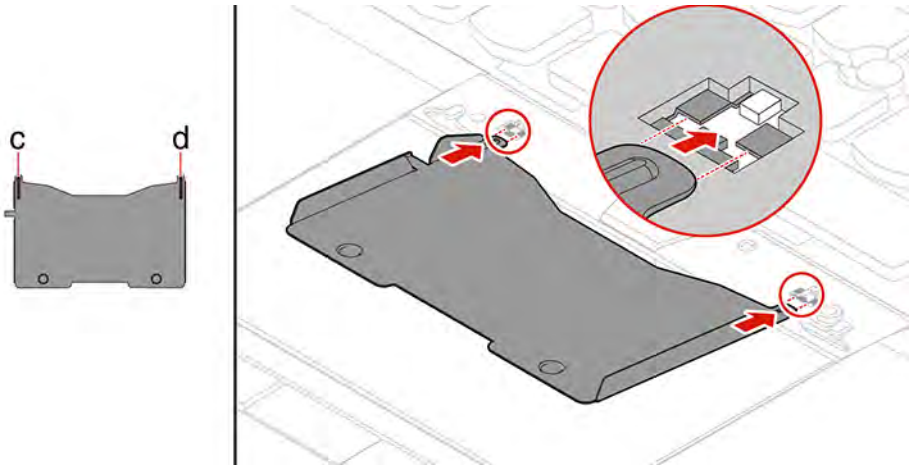

4. Pivot the tool in the direction as shown to release the keyboard 1. Push the keyboard in the direction as shown by arrows 2 to release the latches from the keyboard bezel.

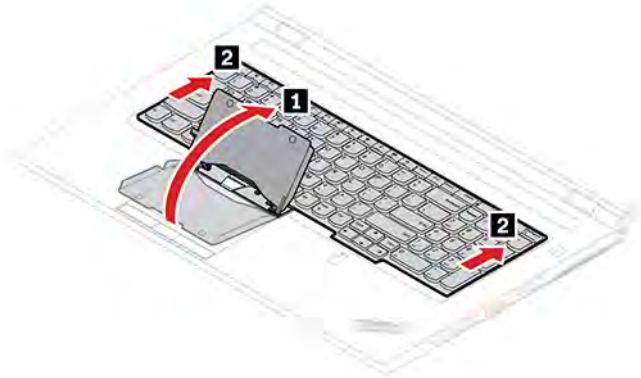

5. Pivot the keyboard slightly upward 1 and then turn over the keyboard 2.

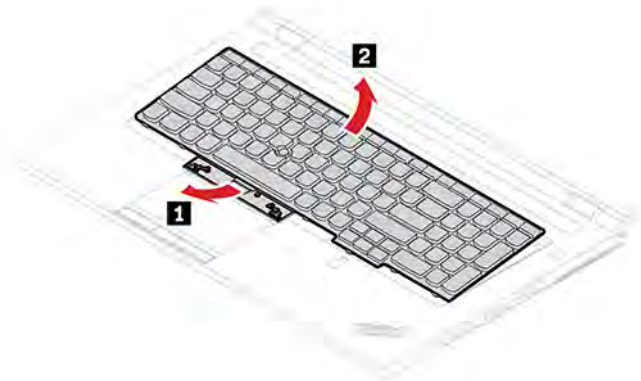

6. Put the keyboard on the palm rest as shown and detach the connectors. Then, remove the keyboard.

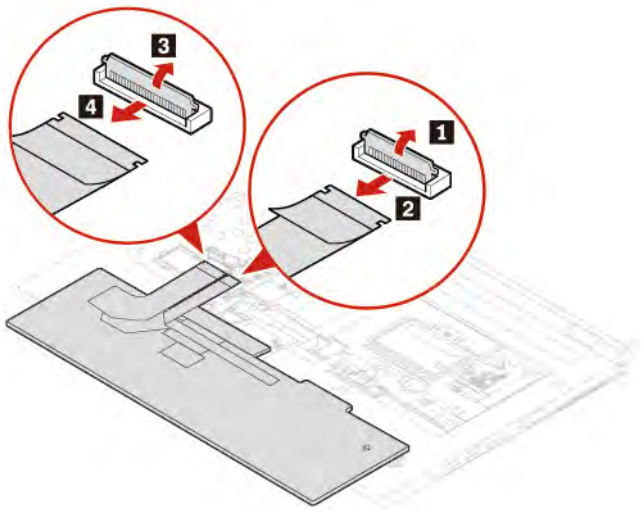

Installation procedure

Note: You might be instructed to slide the keyboard frame forward or backward in some of the following steps. In this case, ensure that you do not press or hold the keys while sliding the keyboard frame. Otherwise, the keyboard frame cannot be moved.

1. Attach the connectors and then turn over the keyboard.

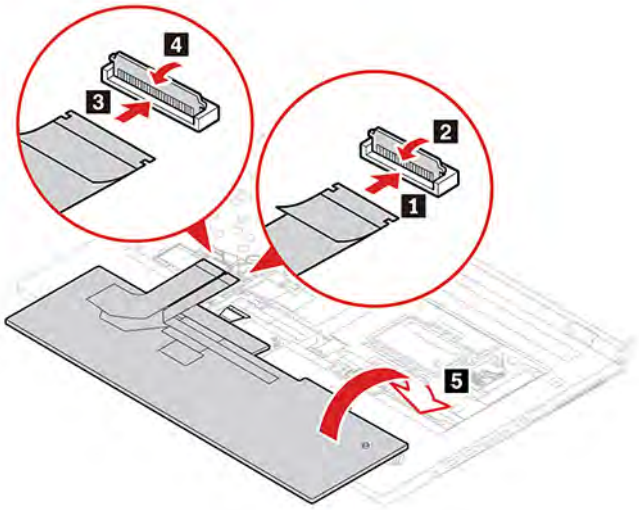

2. Insert the keyboard into the keyboard bezel as shown. Ensure that the top edge of the keyboard (the edge that is close to the display) is under the keyboard bezel.

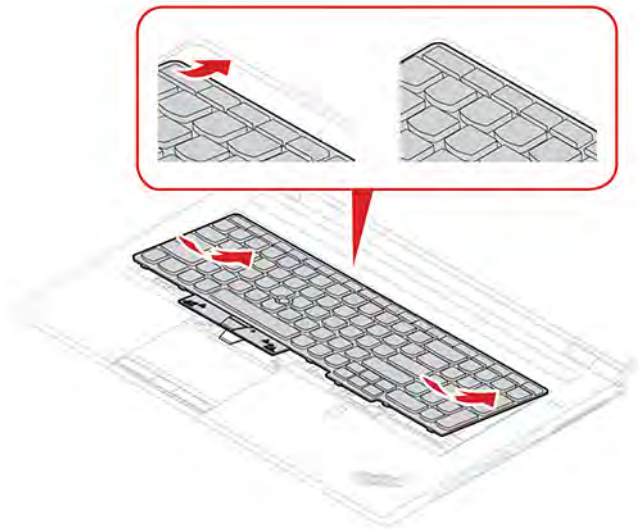

3. Slide the keyboard in the direction as shown. Ensure that the latches are secured under the keyboard frame.

4. Tighten the screws to secure the keyboard.

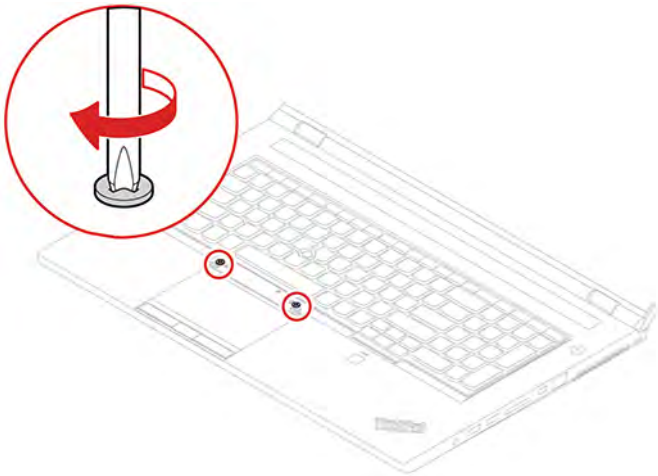

5. Take the new TrackPoint buttons out of the new keyboard package. Install the TrackPoint buttons as shown.

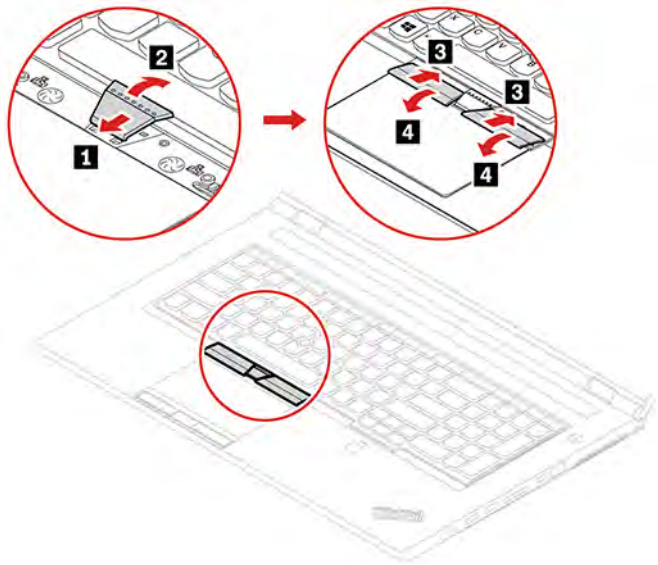

6. Connect the ac power adapter and all disconnected cables to the computer.

Chapter 7. Help and support

Frequently asked questions

How do I access **Control Panel**?	Type `Control Panel` in the Windows search box and then press Enter.
How do I turn off my computer?	Open the **Start** menu and click ⏻ **Power**. Then, click **Shut down**.
How do I partition my storage drive?	https://support.lenovo.com/solutions/ht503851
What do I do if my computer stops responding?	1. Press and hold the power button until the computer turns off. Then, restart the computer. 2. If step 1 does not work: • For models with an emergency reset hole: Insert a straightened paper clip into the emergency reset hole to cut off power supply temporarily. Then, restart the computer with ac power connected. • For models without an emergency reset hole: – For models with the removable battery, remove the removable battery and disconnect all power sources. Then, reconnect to ac power and restart the computer. – For models with the built-in battery, disconnect all power sources. Press and hold the power button for about seven seconds. Then, reconnect to ac power and restart the computer.
What do I do if I spill liquid on the computer?	1. Carefully unplug the ac power adapter and turn off the computer immediately. The more quickly you stop the current from passing through the computer the more likely you will reduce damage from short circuits. **Attention:** Although you might lose some data or work by turning off the computer immediately, leaving the computer on might make your computer unusable. 2. Do not try to drain out the liquid by turning over the computer. If your computer has keyboard drainage holes on the bottom, the liquid will be drained out through the holes. 3. Wait until you are certain that all the liquid is dry before turning on your computer.
How do I enter the UEFI BIOS menu?	Restart the computer. When the logo screen is displayed, press F1 to enter the UEFI BIOS menu.
Where can I get the latest device drivers and UEFI BIOS?	• From the Vantage app. See “Install a Windows operating system and drivers” on page 40 and “Update UEFI BIOS” on page 39. • Download from Lenovo Support Web site at https://pcsupport.lenovo.com.

© Copyright Lenovo 2022

Error messages

If you see a message that is not included in the following table, record the error message first, then shut down the computer and call Lenovo for help. See “Lenovo Customer Support Center” on page 66.

Message	Solution
0190: Critical low-battery error	The computer turned off because the battery power is low. Connect the ac power adapter to the computer and charge the batteries.
0191: System Security - Invalid remote change requested	The system configuration change has failed. Confirm the operation and try again.
0199: System Security - Security password retry count exceeded.	This message is displayed when you enter a wrong supervisor password more than three times. Confirm the supervisor password and try again.
0271: Check Date and Time settings.	The date or the time is not set in the computer. Enter the UEFI BIOS menu and set the date and time.
210x/211x: Detection/Read error on HDDx/SSDx	The storage drive is not working. Reinstall the storage drive. If the problem still exists, replace the storage drive.
Error: The non-volatile system UEFI variable storage is nearly full.	**Note:** This error indicates that the operating system or programs cannot create, modify, or delete data in the non-volatile system UEFI variable storage due to insufficient storage space after POST. The non-volatile system UEFI variable storage is used by the UEFI BIOS and by the operating system or programs. This error occurs when the operating system or programs store large amounts of data in the variable storage. All data needed for POST, such as UEFI BIOS setup settings, chipset, or platform configuration data, are stored in a separate UEFI variable storage. Press F1 after the error message is displayed to enter the UEFI BIOS menu. A dialog asks for confirmation to clean up the storage. If you select “Yes”, all data that were created by the operating system or programs will be deleted except global variables defined by the Unified Extensible Firmware Interface Specification. If you select “No”, all data will be kept, but the operating system or programs will not be able to create, modify, or delete data in the storage. If this error happens at a service center, Lenovo authorized service personnel will clean up the non-volatile system UEFI variable storage using the preceding solution.
Fan error. Press ESC to startup with limited performance.	The thermal fan might not work correctly. After the error message is displayed, press ESC within five seconds to start up the computer with limited performance. Otherwise, the computer will shut down immediately. If the problem still exists when you starts up next time, have your computer serviced.

Beep errors

Lenovo SmartBeep technology enables you to decode beep errors with your smartphone when a black screen occurs with beeps from your computer. To decode the beep error with Lenovo SmartBeep technology:

1. Go to https://support.lenovo.com/smartbeep or scan the following QR Code.
2. Download the proper diagnostic app and install it on your smartphone.
3. Run the diagnostic app and place the smartphone near the computer.
4. Press Fn on your computer to emit the beep again. The diagnostic app decodes the beep error and shows possible solutions on the smartphone.

Note: Do not attempt to service a product yourself unless instructed to do so by the Customer Support Center or product documentation. Only use a Lenovo-authorized service provider to repair your product.

Self-help resources

Use the following self-help resources to learn more about the computer and troubleshoot problems.

Resources	How to access?
Troubleshooting and FAQ	• https://www.lenovo.com/tips • https://forums.lenovo.com
Accessibility information	https://www.lenovo.com/accessibility
Reset or restore Windows	• Use Lenovo recovery options. 1. Go to https://support.lenovo.com/HowToCreateLenovoRecovery. 2. Follow the on-screen instructions. • Use Windows recovery options. 1. Go to https://pcsupport.lenovo.com. 2. Detect your computer or manually select your computer model. 3. Click **Diagnostics** → **Operating System Diagnostics** and then follow the on-screen instructions.
Use the Vantage app to: • Configure device settings. • Download and install UEFI BIOS, drivers, and firmware updates. • Secure your computer from outside threats. • Diagnose hardware problems. • Check the computer warranty status. • Access *User Guide* and helpful articles. **Note:** The available features vary depending on the computer model.	Type `Vantage` in the Windows search box and then press Enter.
Product documentation: • *Safety and Warranty Guide* • *Generic Safety and Compliance Notices* • *Setup Guide* • This *User Guide* • *Regulatory Notice*	Go to https://pcsupport.lenovo.com. Then, follow the on-screen instructions to filter out the documentation you want.

Resources	How to access?
Lenovo Support Web site with the latest support information of the following: • Drivers and software • Diagnostic solutions • Product and service warranty • Product and parts details • Knowledge base and frequently asked questions	https://pcsupport.lenovo.com
Windows help information	• Open the Start menu and click **Get Help** or **Tips**. • Use Windows Search or the Cortana® personal assistant. • Microsoft support Web site: https://support.microsoft.com

Windows label

Your computer might have a Windows Genuine Microsoft label affixed to its cover depending on the following factors:

- Your geographic location
- Edition of Windows that is preinstalled

Go to https://www.microsoft.com/en-us/howtotell/Hardware.aspx for illustrations of the various types of Genuine Microsoft labels.

- In the People's Republic of China, the Genuine Microsoft label is required on all computer models preinstalled with any edition of the Windows operating system.
- In other countries and regions, the Genuine Microsoft label is required only on computer models licensed for Windows Pro editions.

The absence of a Genuine Microsoft label does not indicate that the preinstalled Windows version is not genuine. For details on how to tell whether your preinstalled Windows product is genuine, refer to the information provided by Microsoft at https://www.microsoft.com/en-us/howtotell/default.aspx.

There are no external, visual indicators of the Product ID or Windows version for which the computer is licensed. Instead, the Product ID is recorded in the computer firmware. Whenever a Windows product is installed, the installation program checks the computer firmware for a valid, matching Product ID to complete the activation.

In some cases, an earlier Windows version might be preinstalled under the terms of the Windows Pro edition license downgrade rights.

Call Lenovo

If you have tried to correct the problem yourself and still need help, you can call Lenovo Customer Support Center.

Before you contact Lenovo

Prepare the following before you contact Lenovo:

1. Record the problem symptoms and details:

- What is the problem? Is it continuous or intermittent?
- Any error message or error code?
- What operating system are you using? Which version?
- Which software applications were running at the time of the problem?
- Can the problem be reproduced? If so, how?

2. Record the system information:
   - Product name
   - Machine type and serial number

     The following illustration shows where to find the machine type and serial number of your computer.

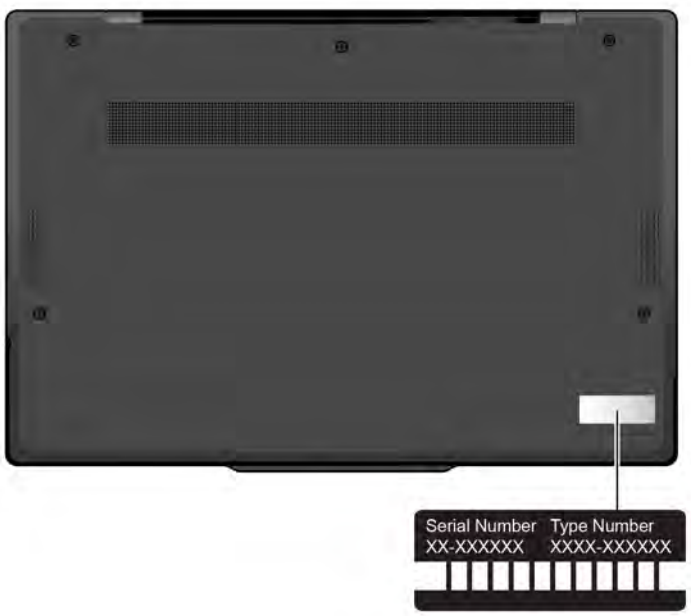

Lenovo Customer Support Center

During the warranty period, you can call Lenovo Customer Support Center for help.

Telephone numbers

For a list of the Lenovo Support phone numbers for your country or region, go to https://pcsupport.lenovo.com/supportphonelist for the latest phone numbers.

Note: Phone numbers are subject to change without notice. If the number for your country or region is not provided, contact your Lenovo reseller or Lenovo marketing representative.

Services available during the warranty period

- Problem determination - Trained personnel are available to assist you with determining if you have a hardware problem and deciding what action is necessary to fix the problem.
- Lenovo hardware repair - If the problem is determined to be caused by Lenovo hardware under warranty, trained service personnel are available to provide the applicable level of service.
- Engineering change management - Occasionally, there might be changes that are required after a product has been sold. Lenovo or your reseller, if authorized by Lenovo, will make selected Engineering Changes (ECs) that apply to your hardware available.

Services not covered

- Replacement or use of parts not manufactured for or by Lenovo or nonwarranted parts
- Identification of software problem sources
- Configuration of UEFI BIOS as part of an installation or upgrade
- Changes, modifications, or upgrades to device drivers
- Installation and maintenance of network operating systems (NOS)
- Installation and maintenance of programs

For the terms and conditions of the Lenovo Limited Warranty that apply to your Lenovo hardware product, go to:

- https://www.lenovo.com/warranty/llw_02
- https://pcsupport.lenovo.com/warrantylookup

Purchase additional services

During and after the warranty period, you can purchase additional services from Lenovo at https://pcsupport.lenovo.com/warrantyupgrade.

Service availability and service name might vary by country or region.

Appendix A. Compliance information

For compliance information, refer to *Regulatory Notice* at https://pcsupport.lenovo.com and *Generic Safety and Compliance Notices* at https://pcsupport.lenovo.com/docs/generic_notices.

Certification-related information

Product name	Compliance ID	Machine type(s)
ThinkPad Z13 Gen 1 ThinkPad Z13 Gen 1 LTE	• TP00140A • TP00140A0[1] • TP00140A1[1]	21D2 and 21D3
ThinkPad Z16 Gen 1 ThinkPad Z16 Gen 1 LTE	• TP00141A • TP00141A0[1] • TP00141A1[1] • TP00141A2[1] • TP00141A3[1]	21D4 and 21D5

[1] for India only

Further compliance information related to your product is available at https://www.lenovo.com/compliance.

Locate the UltraConnect wireless antennas

Your computer has an UltraConnect™ wireless antenna system. You can enable wireless communication wherever you are.

For models with Wireless-WAN card

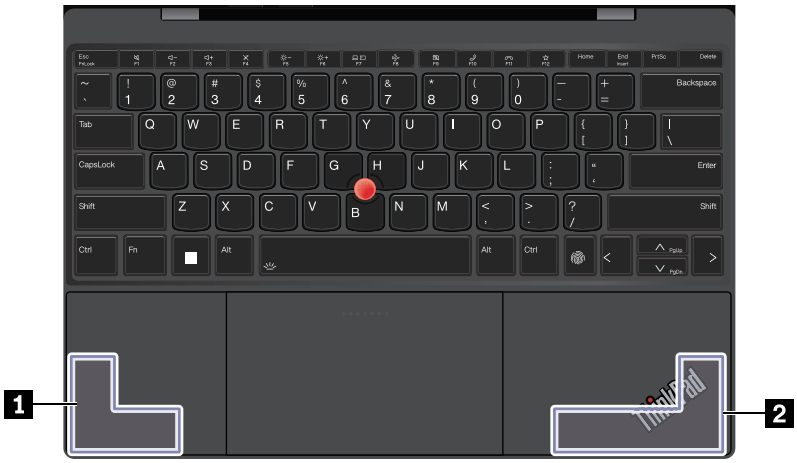

1 Wireless LAN antenna (main) and Wireless WAN antenna (auxiliary, for selected models)
2 Wireless LAN antenna (auxiliary) and Wireless WAN antenna (main, for selected models)

© Copyright Lenovo 2022

For models without Wireless-WAN card

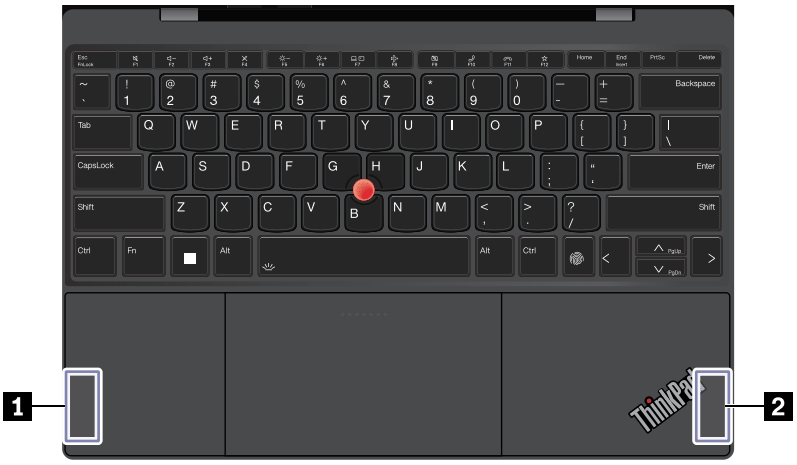

1 Wireless LAN antenna (main)
2 Wireless LAN antenna (auxiliary)

Operating environment

Maximum altitude (without pressurization)

3048 m (10 000 ft)

Temperature

- Operating: 5°C to 35°C (41°F to 95°F)
- Storage and transportation in original shipping packaging: -20°C to 60°C (-4°F to 140°F)
- Storage without packaging: 5°C to 43°C (41°F to 109°F)

Note: When you charge the battery, its temperature must be no lower than 10°C (50°F).

Relative humidity

- Operating: 8% to 95% at wet-bulb temperature 23°C (73°F)
- Storage and transportation: 5% to 95% at wet-bulb temperature 27°C (81°F)

Appendix B. Notices and trademarks

Notices

Lenovo may not offer the products, services, or features discussed in this document in all countries. Consult your local Lenovo representative for information on the products and services currently available in your area. Any reference to a Lenovo product, program, or service is not intended to state or imply that only that Lenovo product, program, or service may be used. Any functionally equivalent product, program, or service that does not infringe any Lenovo intellectual property right may be used instead. However, it is the user's responsibility to evaluate and verify the operation of any other product, program, or service.

Lenovo may have patents or pending patent programs covering subject matter described in this document. The furnishing of this document does not give you any license to these patents. You can send license inquiries, in writing, to:

Lenovo (United States), Inc.
8001 Development Drive
Morrisville, NC 27560
U.S.A.
Attention: Lenovo Director of Licensing

LENOVO PROVIDES THIS PUBLICATION "AS IS" WITHOUT WARRANTY OF ANY KIND, EITHER EXPRESS OR IMPLIED, INCLUDING, BUT NOT LIMITED TO, THE IMPLIED WARRANTIES OF NON-INFRINGEMENT, MERCHANTABILITY OR FITNESS FOR A PARTICULAR PURPOSE. Some jurisdictions do not allow disclaimer of express or implied warranties in certain transactions, therefore, this statement may not apply to you.

Changes are made periodically to the information herein; these changes will be incorporated in new editions of the publication. To provide better service, Lenovo reserves the right to improve and/or modify the products and software programs described in the manuals included with your computer, and the content of the manual, at any time without additional notice.

The software interface and function and hardware configuration described in the manuals included with your computer might not match exactly the actual configuration of the computer that you purchase. For the configuration of the product, refer to the related contract (if any) or product packing list, or consult the distributor for the product sales. Lenovo may use or distribute any of the information you supply in any way it believes appropriate without incurring any obligation to you.

The products described in this document are not intended for use in implantation or other life support applications where malfunction may result in injury or death to persons. The information contained in this document does not affect or change Lenovo product specifications or warranties. Nothing in this document shall operate as an express or implied license or indemnity under the intellectual property rights of Lenovo or third parties. All information contained in this document was obtained in specific environments and is presented as an illustration. The result obtained in other operating environments may vary.

Lenovo may use or distribute any of the information you supply in any way it believes appropriate without incurring any obligation to you.

Any references in this publication to non-Lenovo Web sites are provided for convenience only and do not in any manner serve as an endorsement of those Web sites. The materials at those Web sites are not part of the materials for this Lenovo product, and use of those Web sites is at your own risk.

© Copyright Lenovo 2022

Any performance data contained herein was determined in a controlled environment. Therefore, the result obtained in other operating environments may vary significantly. Some measurements may have been made on development-level systems and there is no guarantee that these measurements will be the same on generally available systems. Furthermore, some measurements may have been estimated through extrapolation. Actual results may vary. Users of this document should verify the applicable data for their specific environment.

This document is copyrighted by Lenovo and is not covered by any open source license, including any Linux® agreement(s) which may accompany software included with this product. Lenovo may update this document at any time without notice.

For the latest information or any questions or comments, contact or visit the Lenovo Web site:

https://pcsupport.lenovo.com

Trademarks

LENOVO, LENOVO logo, THINKPAD, THINKPAD logo, TRACKPOINT, and ULTRACONNECT are trademarks of Lenovo. Linux is the registered trademark of Linus Torvalds in the U.S. and other countries. Microsoft, Microsoft Teams, Windows, BitLocker, and Cortana are trademarks of the Microsoft group of companies. Mini DisplayPort (mDP) and DisplayPort are trademarks of the Video Electronics Standards Association. The terms HDMI and HDMI High-Definition Multimedia Interface are trademarks or registered trademarks of HDMI Licensing LLC in the United States and other countries. USB-C is a registered trademark of USB Implementers Forum. Wi-Fi and Miracast are registered trademarks of Wi-Fi Alliance. All other trademarks are the property of their respective owners.