Test Laboratory: Sporton International Inc. SAR/HAC Testing Lab Date: 2020.7.22

System Check_Head_2600MHz

DUT: D2600V2 - SN:1061

Communication System: UID 0, CW; Frequency: 2600 MHz;Duty Cycle: 1:1
Medium: HSL_2600 Medium parameters used: f = 2600 MHz; σ = 2.005 S/m; ε_r = 39.895; ρ = 1000 kg/m^3
Ambient Temperature：23.2 °C; Liquid Temperature：22.6 °C

DASY5 Configuration:
- Probe: EX3DV4 - SN3935; ConvF(7.43, 7.43, 7.43); Calibrated: 2020.5.27
- Sensor-Surface: 1.4mm (Mechanical Surface Detection)
- Electronics: DAE4 Sn1358; Calibrated: 2020.4.28
- Phantom: SAM1; Type: SAM; Serial: TP-1753
- Measurement SW: DASY52, Version 52.10 (4); SEMCAD X Version 14.6.14 (7483)

Pin=250mW/Area Scan (71x71x1): Interpolated grid: dx=1.200 mm, dy=1.200 mm
Maximum value of SAR (interpolated) = 25.5 W/kg

Pin=250mW/Zoom Scan (7x7x7)/Cube 0: Measurement grid: dx=5mm, dy=5mm, dz=5mm
Reference Value = 115.6 V/m; Power Drift = -0.11 dB
Peak SAR (extrapolated) = 32.3 W/kg
SAR(1 g) = 13.9 W/kg; SAR(10 g) = 6.08 W/kg
Maximum value of SAR (measured) = 25.0 W/kg

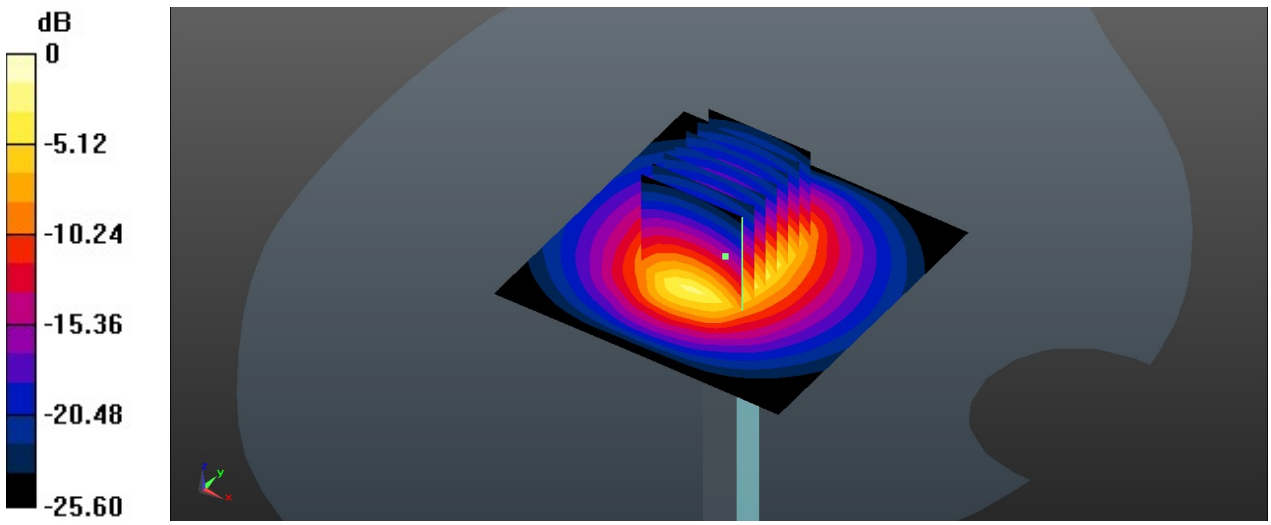

0 dB = 25.0 W/kg = 13.98 dBW/kg

Test Laboratory: Sporton International Inc. SAR/HAC Testing Lab Date: 2020.7.24

System Check_Head_750MHz

DUT: D750V3 - SN:1087

Communication System: UID 0, CW (0); Frequency: 750 MHz;Duty Cycle: 1:1
Medium: HSL_750 Medium parameters used: f = 750 MHz; σ = 0.902 S/m; ε_r = 42.186; ρ = 1000 kg/m^3
Ambient Temperature：23.3 °C; Liquid Temperature：22.8 °C

DASY5 Configuration:
- Probe: EX3DV4 - SN7592; ConvF(10.31, 10.31, 10.31); Calibrated: 2020.5.22
- Sensor-Surface: 1.4mm (Mechanical Surface Detection)
- Electronics: DAE4 Sn656; Calibrated: 2019.12.17
- Phantom: SAM2; Type: SAM; Serial: TP-1503
- Measurement SW: DASY52, Version 52.10 (4); SEMCAD X Version 14.6.14 (7483)

Pin=250mW/Area Scan (61x61x1): Interpolated grid: dx=1.500 mm, dy=1.500 mm
Maximum value of SAR (interpolated) = 2.68 W/kg

Pin=250mW/Zoom Scan (5x5x7)/Cube 0: Measurement grid: dx=8mm, dy=8mm, dz=5mm
Reference Value = 49.18 V/m; Power Drift = 0.14 dB
Peak SAR (extrapolated) = 3.20 W/kg
SAR(1 g) = 2.16 W/kg; SAR(10 g) = 1.42 W/kg
Maximum value of SAR (measured) = 2.74 W/kg

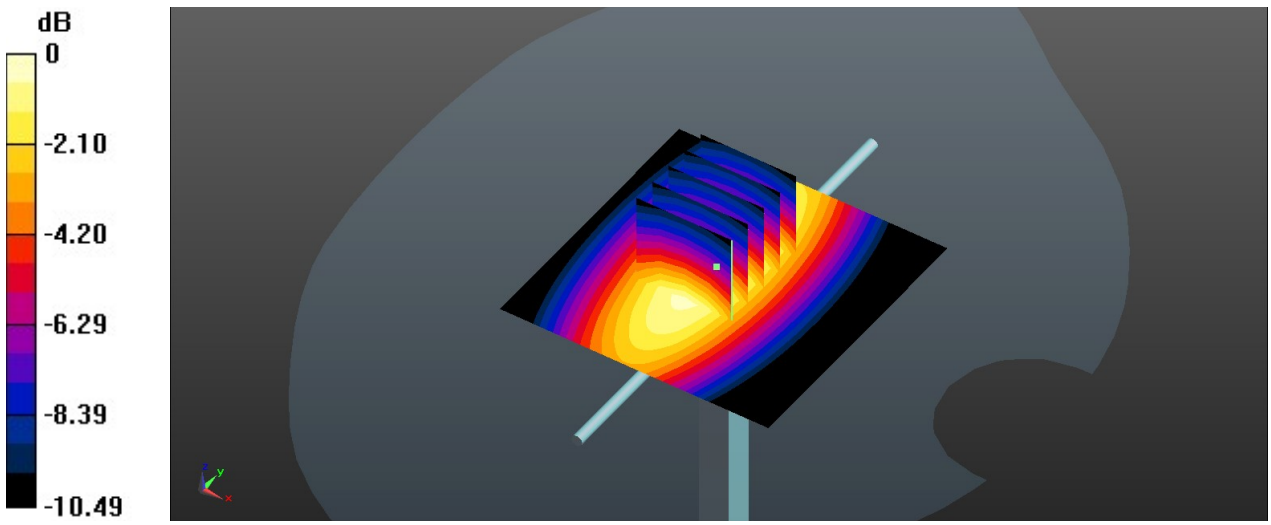

0 dB = 2.74 W/kg = 4.38 dBW/kg

Test Laboratory: Sporton International Inc. SAR/HAC Testing Lab Date: 2020.7.22

System Check_Head_835MHz

DUT: D835V2 - SN:4d151

Communication System: UID 0, CW (0); Frequency: 835 MHz;Duty Cycle: 1:1
Medium: HSL_835 Medium parameters used: f = 835 MHz; σ = 0.924 S/m; ε_r = 42.621; ρ = 1000 kg/m^3
Ambient Temperature：23.3 °C; Liquid Temperature：22.7 °C

DASY5 Configuration:
- Probe: EX3DV4 - SN7592; ConvF(10.05, 10.05, 10.05); Calibrated: 2020.5.22
- Sensor-Surface: 1.4mm (Mechanical Surface Detection)
- Electronics: DAE4 Sn656; Calibrated: 2019.12.17
- Phantom: SAM2; Type: SAM; Serial: TP-1503
- Measurement SW: DASY52, Version 52.10 (4); SEMCAD X Version 14.6.14 (7483)

Pin=250mW/Area Scan (61x61x1): Interpolated grid: dx=1.500 mm, dy=1.500 mm
Maximum value of SAR (interpolated) = 2.98 W/kg

Pin=250mW/Zoom Scan (5x5x7)/Cube 0: Measurement grid: dx=8mm, dy=8mm, dz=5mm
Reference Value = 59.21 V/m; Power Drift = -0.15 dB
Peak SAR (extrapolated) = 3.59 W/kg
SAR(1 g) = 2.52 W/kg; SAR(10 g) = 1.67 W/kg
Maximum value of SAR (measured) = 2.95 W/kg

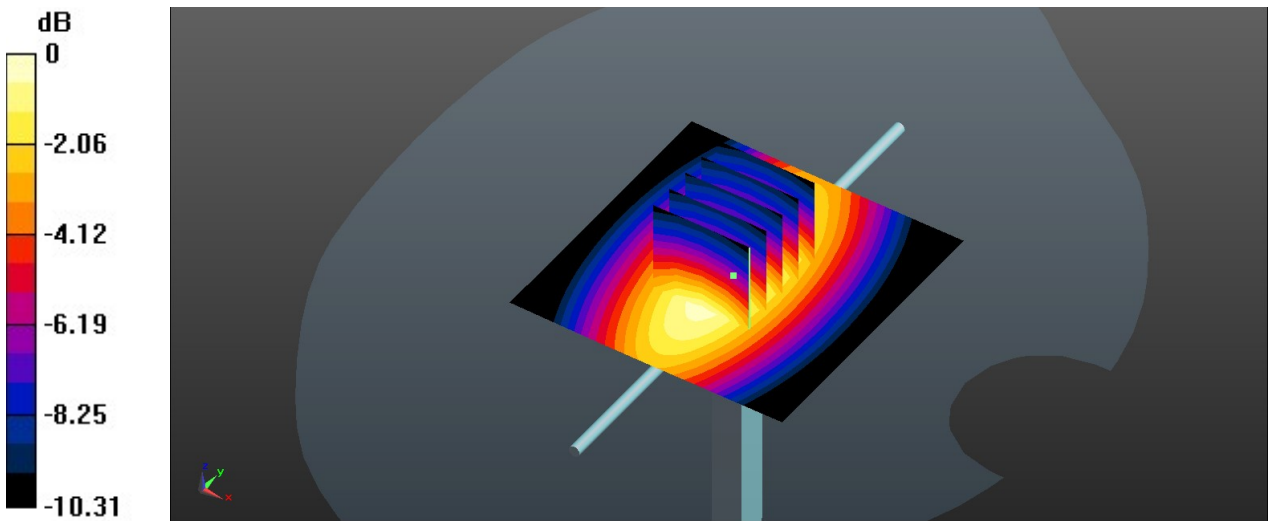

0 dB = 2.95 W/kg = 4.70 dBW/kg

Test Laboratory: Sporton International Inc. SAR/HAC Testing Lab Date: 2020.7.26

System Check_Head_1750MHz

DUT: D1750V2 - SN:1090

Communication System: UID 0, CW; Frequency: 1750 MHz;Duty Cycle: 1:1
Medium: HSL_1750 Medium parameters used: f = 1750 MHz; σ = 1.386 S/m; ε_r = 39.586; ρ = 1000 kg/m^3
Ambient Temperature：23.3 °C; Liquid Temperature：22.9 °C

DASY5 Configuration:
- Probe: EX3DV4 - SN7592; ConvF(8.41, 8.41, 8.41); Calibrated: 2020.5.22
- Sensor-Surface: 1.4mm (Mechanical Surface Detection)
- Electronics: DAE4 Sn656; Calibrated: 2019.12.17
- Phantom: SAM2; Type: SAM; Serial: TP-1503
- Measurement SW: DASY52, Version 52.10 (4); SEMCAD X Version 14.6.14 (7483)

Pin=250mW/Area Scan (61x61x1): Interpolated grid: dx=1.500 mm, dy=1.500 mm
Maximum value of SAR (interpolated) = 14.0 W/kg

Pin=250mW/Zoom Scan (5x5x7)/Cube 0: Measurement grid: dx=8mm, dy=8mm, dz=5mm
Reference Value = 88.95 V/m; Power Drift = -0.03 dB
Peak SAR (extrapolated) = 17.5 W/kg
SAR(1 g) = 9.73 W/kg; SAR(10 g) = 5.16 W/kg
Maximum value of SAR (measured) = 13.7 W/kg

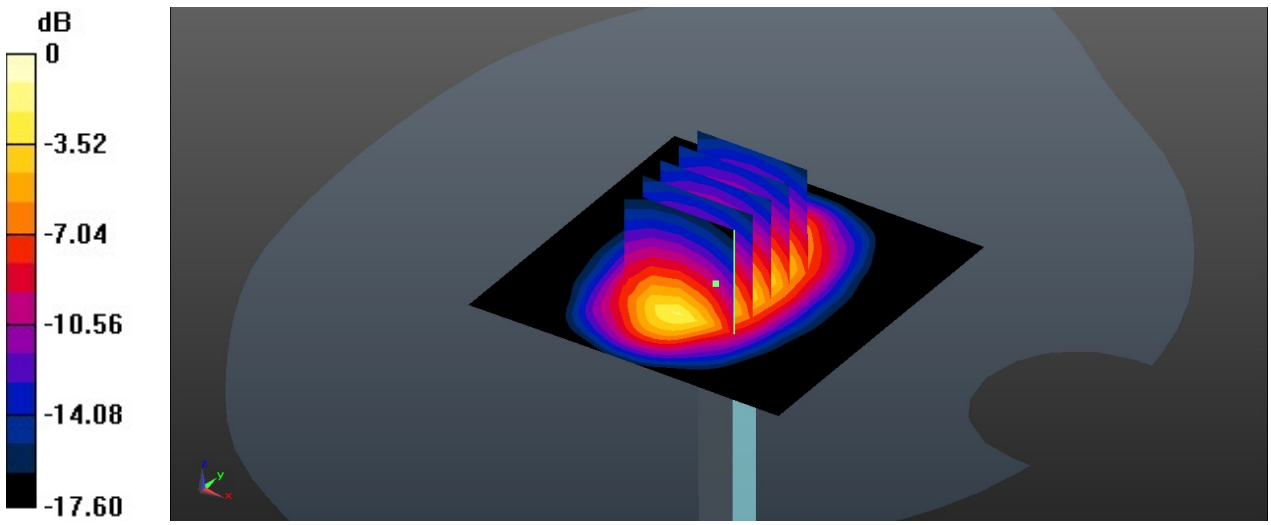

0 dB = 13.7 W/kg = 11.37 dBW/kg

Test Laboratory: Sporton International Inc. SAR/HAC Testing Lab Date: 2020.7.28

System Check_Head_1900MHz

DUT: D1900V2 - SN:5d170

Communication System: UID 0, CW (0); Frequency: 1900 MHz;Duty Cycle: 1:1
Medium: HSL_1900 Medium parameters used: f = 1900 MHz; σ = 1.41 S/m; ε_r = 38.656; ρ = 1000 kg/m^3
Ambient Temperature：23.4 ℃; Liquid Temperature：22.8 ℃

DASY5 Configuration:
- Probe: EX3DV4 - SN7592; ConvF(8.22, 8.22, 8.22); Calibrated: 2020.5.22
- Sensor-Surface: 1.4mm (Mechanical Surface Detection)
- Electronics: DAE4 Sn656; Calibrated: 2019.12.17
- Phantom: SAM2; Type: SAM; Serial: TP-1503
- Measurement SW: DASY52, Version 52.10 (4); SEMCAD X Version 14.6.14 (7483)

Pin=250mW/Area Scan (61x61x1): Interpolated grid: dx=1.500 mm, dy=1.500 mm
Maximum value of SAR (interpolated) = 14.1 W/kg

Pin=250mW/Zoom Scan (5x5x7)/Cube 0: Measurement grid: dx=8mm, dy=8mm, dz=5mm
Reference Value = 85.64 V/m; Power Drift = 0.18 dB
Peak SAR (extrapolated) = 18.2 W/kg
SAR(1 g) = 9.78 W/kg; SAR(10 g) = 5.04 W/kg
Maximum value of SAR (measured) = 14.2 W/kg

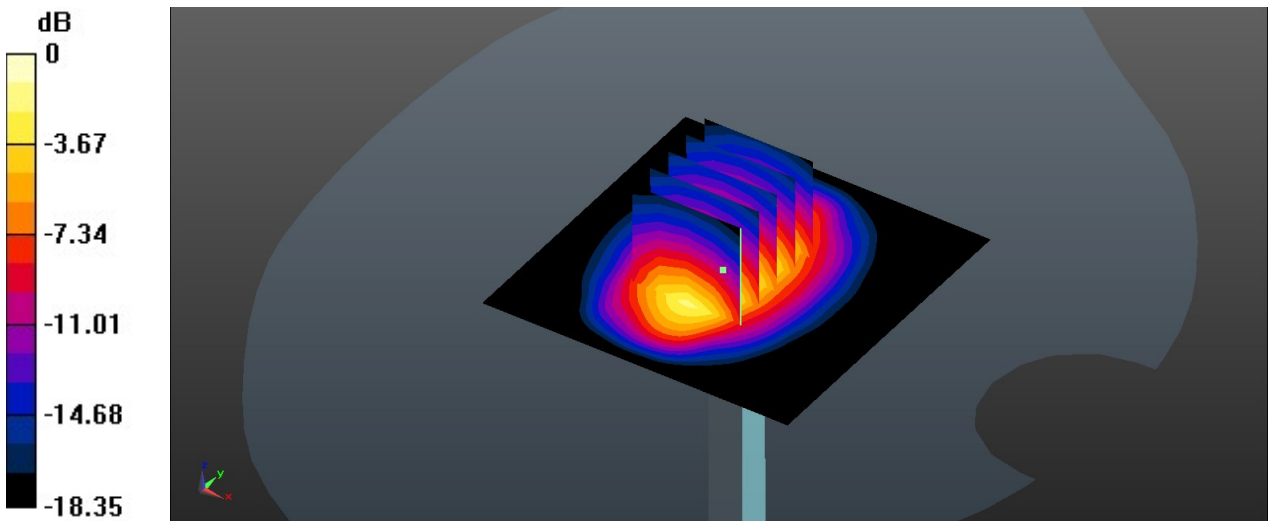

0 dB = 14.2 W/kg = 11.52 dBW/kg

Test Laboratory: Sporton International Inc. SAR/HAC Testing Lab Date: 2020.7.30

System Check_Head_2600MHz

DUT: D2600V2 - SN:1061

Communication System: UID 0, CW; Frequency: 2600 MHz;Duty Cycle: 1:1
Medium: HSL_2600 Medium parameters used: f = 2600 MHz; σ = 2.008 S/m; ε_r = 37.793; ρ = 1000 kg/m^3
Ambient Temperature：23.2 ℃; Liquid Temperature：22.8 ℃

DASY5 Configuration:
- Probe: EX3DV4 - SN7592; ConvF(7.31, 7.31, 7.31); Calibrated: 2020.5.22
- Sensor-Surface: 1.4mm (Mechanical Surface Detection)
- Electronics: DAE4 Sn656; Calibrated: 2019.12.17
- Phantom: SAM2; Type: SAM; Serial: TP-1503
- Measurement SW: DASY52, Version 52.10 (4); SEMCAD X Version 14.6.14 (7483)

Pin=250mW/Area Scan (61x61x1): Interpolated grid: dx=1.500 mm, dy=1.500 mm
Maximum value of SAR (interpolated) = 22.0 W/kg

Pin=250mW/Zoom Scan (5x5x7)/Cube 0: Measurement grid: dx=8mm, dy=8mm, dz=5mm
Reference Value = 88.91 V/m; Power Drift = -0.14 dB
Peak SAR (extrapolated) = 29.7 W/kg
SAR(1 g) = 14.1 W/kg; SAR(10 g) = 6.36 W/kg
Maximum value of SAR (measured) = 21.9 W/kg

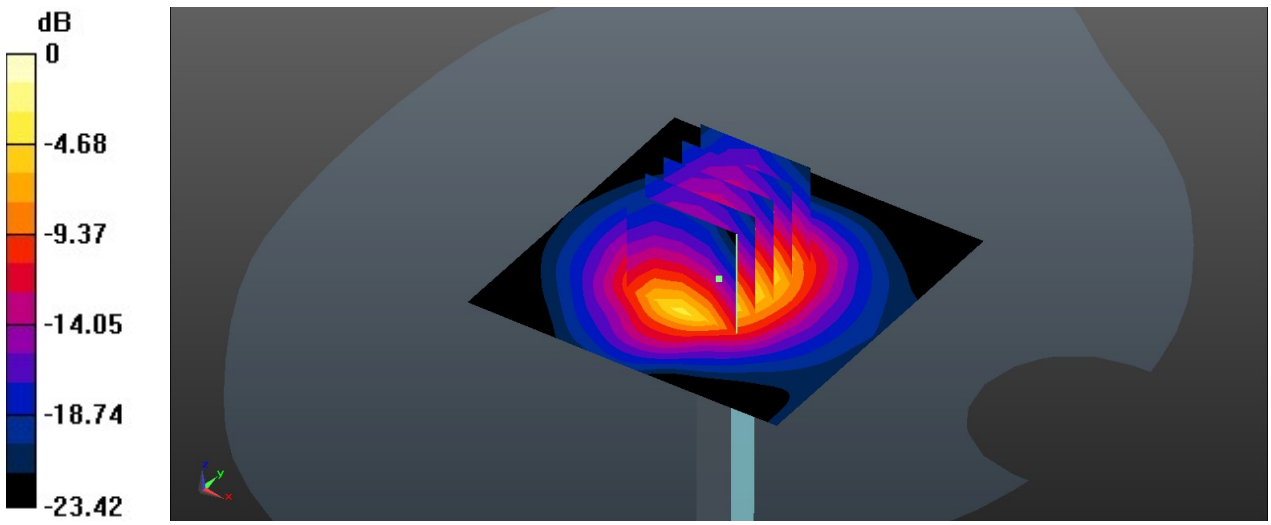

0 dB = 21.9 W/kg = 13.40 dBW/kg

Test Laboratory: Sporton International Inc. SAR/HAC Testing Lab Date: 2020.7.17

System Check_Head_750MHz

DUT: D750V3 - SN:1087

Communication System: UID 0, CW; Frequency: 750 MHz;Duty Cycle: 1:1
Medium: HSL_750 Medium parameters used: f = 750 MHz; σ = 0.921 S/m; ε_r = 41.62; ρ = 1000 kg/m^3
Ambient Temperature：23.2 ℃; Liquid Temperature：22.7 ℃

DASY5 Configuration:
- Probe: ES3DV3 - SN3279; ConvF(6.44, 6.44, 6.44); Calibrated: 2020.6.2
- Sensor-Surface: 3mm (Mechanical Surface Detection)
- Electronics: DAE4 Sn690; Calibrated: 2020.3.26
- Phantom: SAM2; Type: SAM; Serial: TP-1503
- Measurement SW: DASY52, Version 52.10 (4); SEMCAD X Version 14.6.14 (7483)

Pin=250mW/Area Scan (61x61x1): Interpolated grid: dx=1.500 mm, dy=1.500 mm
Maximum value of SAR (interpolated) = 2.65 W/kg

Pin=250mW/Zoom Scan (5x5x7)/Cube 0: Measurement grid: dx=8mm, dy=8mm, dz=5mm
Reference Value = 50.04 V/m; Power Drift = -0.12 dB
Peak SAR (extrapolated) = 3.04 W/kg
SAR(1 g) = 2.09 W/kg; SAR(10 g) = 1.4 W/kg
Maximum value of SAR (measured) = 2.62 W/kg

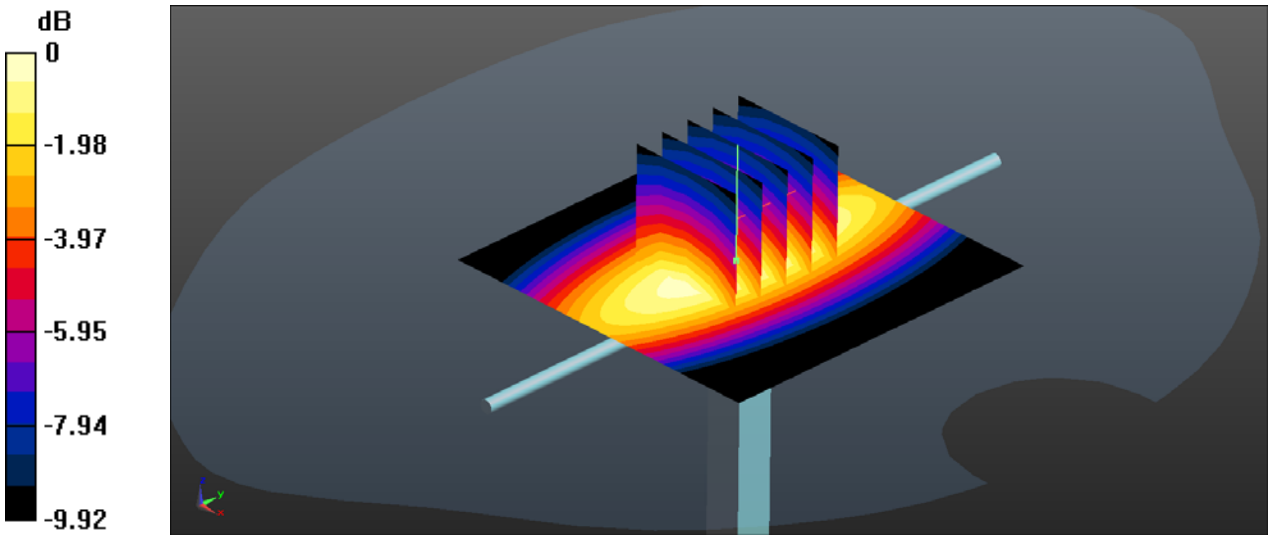

0 dB = 2.62 W/kg = 4.18 dBW/kg

Test Laboratory: Sporton International Inc. SAR/HAC Testing Lab Date: 2020.7.19

System Check_Head_850MHz

DUT: D835V2 - SN:4d151

Communication System: UID 0, CW (0); Frequency: 835 MHz;Duty Cycle: 1:1
Medium: HSL_835 Medium parameters used: f = 835 MHz; σ = 0.904 S/m; ε_r = 42.418; ρ = 1000 kg/m^3
Ambient Temperature：23.2 ℃; Liquid Temperature：22.6 ℃

DASY5 Configuration:
- Probe: ES3DV3 - SN3279; ConvF(6.25, 6.25, 6.25); Calibrated: 2020.6.2
- Sensor-Surface: 3mm (Mechanical Surface Detection)
- Electronics: DAE4 Sn690; Calibrated: 2020.3.26
- Phantom: SAM2; Type: SAM; Serial: TP-1503
- Measurement SW: DASY52, Version 52.10 (4); SEMCAD X Version 14.6.14 (7483)

Pin=250mW/Area Scan (61x61x1): Interpolated grid: dx=1.500 mm, dy=1.500 mm
Maximum value of SAR (interpolated) = 2.98 W/kg

Pin=250mW/Zoom Scan (5x5x7)/Cube 0: Measurement grid: dx=8mm, dy=8mm, dz=5mm
Reference Value = 52.32 V/m; Power Drift = 0.03 dB
Peak SAR (extrapolated) = 3.53 W/kg
SAR(1 g) = 2.33 W/kg; SAR(10 g) = 1.52 W/kg
Maximum value of SAR (measured) = 2.98 W/kg

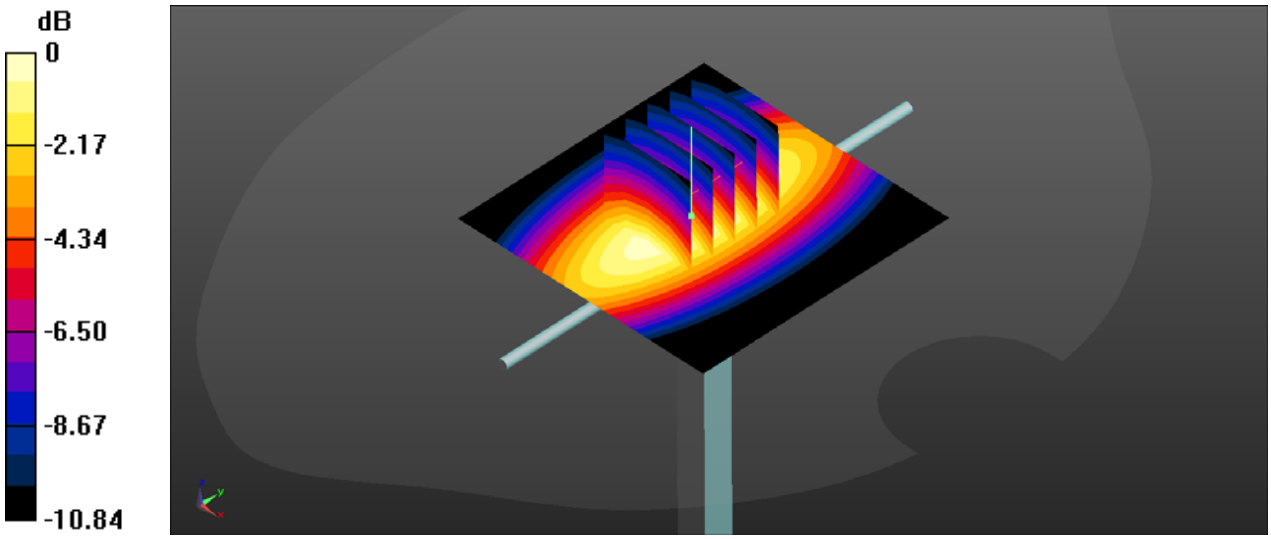

0 dB = 2.98 W/kg = 4.74 dBW/kg

Test Laboratory: Sporton International Inc. SAR/HAC Testing Lab Date: 2020.7.21

System Check_Head_1750MHz

DUT: D1750V2 - SN:1090

Communication System: UID 0, CW (0); Frequency: 1750 MHz;Duty Cycle: 1:1
Medium: HSL_1750 Medium parameters used: f = 1750 MHz; σ = 1.351 S/m; ε_r = 40.38; ρ = 1000 kg/m^3
Ambient Temperature：23.4 ℃; Liquid Temperature：22.6 ℃

DASY5 Configuration:
- Probe: ES3DV3 - SN3279; ConvF(5.4, 5.4, 5.4); Calibrated: 2020.6.2
- Sensor-Surface: 3mm (Mechanical Surface Detection)
- Electronics: DAE4 Sn690; Calibrated: 2020.3.26
- Phantom: SAM2; Type: SAM; Serial: TP-1503
- Measurement SW: DASY52, Version 52.10 (4); SEMCAD X Version 14.6.14 (7483)

Pin=250mW/Area Scan (61x61x1): Interpolated grid: dx=1.500 mm, dy=1.500 mm
Maximum value of SAR (interpolated) = 12.5 W/kg

Pin=250mW/Zoom Scan (5x5x7)/Cube 0: Measurement grid: dx=8mm, dy=8mm, dz=5mm
Reference Value = 85.02 V/m; Power Drift = -0.02 dB
Peak SAR (extrapolated) = 15.5 W/kg
SAR(1 g) = 8.87 W/kg; SAR(10 g) = 4.81 W/kg
Maximum value of SAR (measured) = 12.4 W/kg

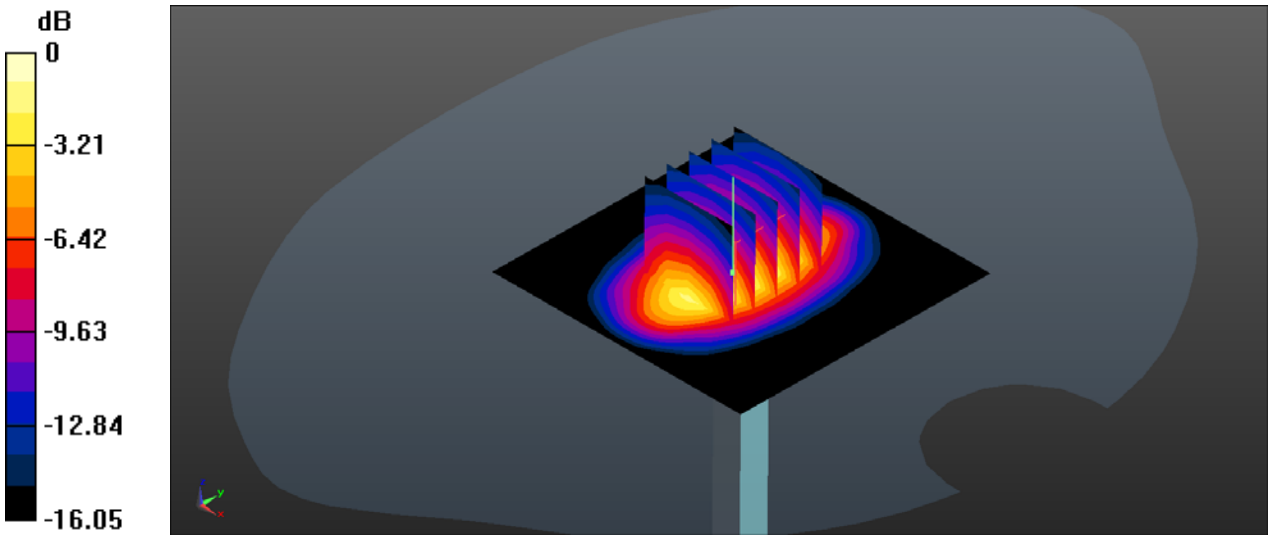

0 dB = 12.4 W/kg = 10.93 dBW/kg

Test Laboratory: Sporton International Inc. SAR/HAC Testing Lab Date: 2020.7.23

System Check_Head_1900MHz

DUT: D1900V2 - SN:5d170

Communication System: UID 0, CW (0); Frequency: 1900 MHz;Duty Cycle: 1:1
Medium: HSL_1900 Medium parameters used: f = 1900 MHz; σ = 1.46 S/m; ε_r = 40.076; ρ = 1000 kg/m^3
Ambient Temperature：23.3 ℃; Liquid Temperature：22.7 ℃

DASY5 Configuration:
- Probe: ES3DV3 - SN3279; ConvF(5.16, 5.16, 5.16); Calibrated: 2020.6.2
- Sensor-Surface: 3mm (Mechanical Surface Detection)
- Electronics: DAE4 Sn690; Calibrated: 2020.3.26
- Phantom: SAM2; Type: SAM; Serial: TP-1503
- Measurement SW: DASY52, Version 52.10 (4); SEMCAD X Version 14.6.14 (7483)

Pin=250mW/Area Scan (61x61x1): Interpolated grid: dx=1.500 mm, dy=1.500 mm
Maximum value of SAR (interpolated) = 12.9 W/kg

Pin=250mW/Zoom Scan (5x5x7)/Cube 0: Measurement grid: dx=8mm, dy=8mm, dz=5mm
Reference Value = 96.40 V/m; Power Drift = -0.01 dB
Peak SAR (extrapolated) = 18.3 W/kg
SAR(1 g) = 10.3 W/kg; SAR(10 g) = 5.48 W/kg
Maximum value of SAR (measured) = 13.0 W/kg

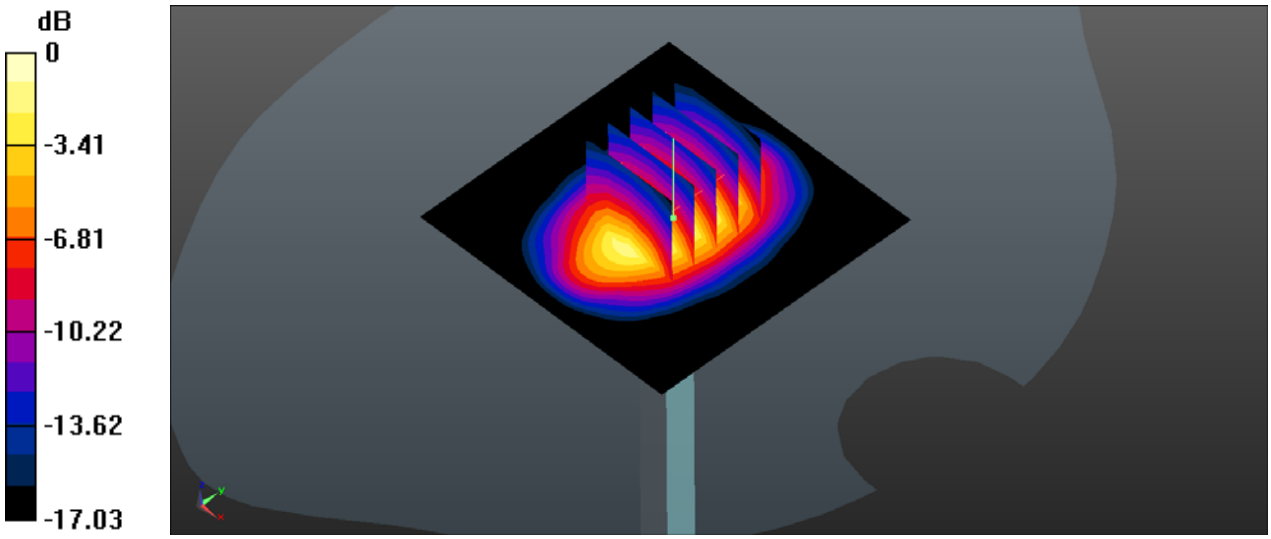

0 dB = 13.0 W/kg = 11.14 dBW/kg

Test Laboratory: Sporton International Inc. SAR/HAC Testing Lab Date: 2020.7.25

System Check_Head_2600MHz

DUT: D2600V2 - SN:1061

Communication System: UID 0, CW; Frequency: 2600 MHz;Duty Cycle: 1:1
Medium: HSL_2600 Medium parameters used: f = 2600 MHz; σ = 1.98 S/m; ε_r = 39.097; ρ = 1000 kg/m^3
Ambient Temperature：23.3 ℃; Liquid Temperature：22.6 ℃

DASY5 Configuration:
- Probe: ES3DV3 - SN3279; ConvF(4.54, 4.54, 4.54); Calibrated: 2020.6.2
- Sensor-Surface: 3mm (Mechanical Surface Detection)
- Electronics: DAE4 Sn690; Calibrated: 2020.3.26
- Phantom: SAM2; Type: SAM; Serial: TP-1503
- Measurement SW: DASY52, Version 52.10 (4); SEMCAD X Version 14.6.14 (7483)

Pin=250mW/Area Scan (71x71x1): Interpolated grid: dx=1.200 mm, dy=1.200 mm
Maximum value of SAR (interpolated) = 19.6 W/kg

Pin=250mW/Zoom Scan (7x7x7)/Cube 0: Measurement grid: dx=5mm, dy=5mm, dz=5mm
Reference Value = 90.78 V/m; Power Drift = 0.07 dB
Peak SAR (extrapolated) = 32.0 W/kg
SAR(1 g) = 14.1 W/kg; SAR(10 g) = 6.1 W/kg
Maximum value of SAR (measured) = 19.0 W/kg

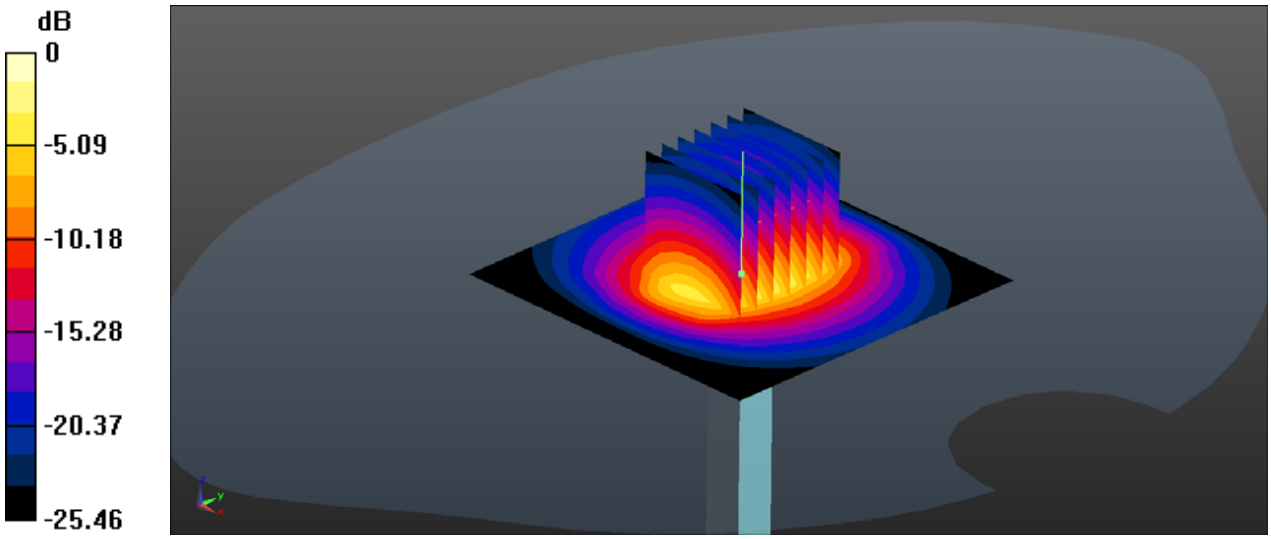

0 dB = 19.0 W/kg = 12.79 dBW/kg

Test Laboratory: Sporton International Inc. SAR/HAC Testing Lab Date: 2020.7.17

System Check_Head_2450MHz

DUT: D2450V2 - SN:908

Communication System: UID 0, CW (0); Frequency: 2450 MHz;Duty Cycle: 1:1
Medium: HSL_2450 Medium parameters used: f = 2450 MHz; σ = 1.849 S/m; ε_r = 40.033; ρ = 1000 kg/m^3
Ambient Temperature：23.2 ℃; Liquid Temperature：22.9 ℃

DASY5 Configuration:
- Probe: EX3DV4 - SN3935; ConvF(7.6, 7.6, 7.6); Calibrated: 2020.5.27
- Sensor-Surface: 1.4mm (Mechanical Surface Detection)
- Electronics: DAE4 Sn1358; Calibrated: 2020.4.28
- Phantom: SAM1; Type: SAM; Serial: TP-1753
- Measurement SW: DASY52, Version 52.10 (4); SEMCAD X Version 14.6.14 (7483)

Pin=250mW/Area Scan (71x71x1): Interpolated grid: dx=1.200 mm, dy=1.200 mm
Maximum value of SAR (interpolated) = 20.3 W/kg

Pin=250mW/Zoom Scan (7x7x7)/Cube 0: Measurement grid: dx=5mm, dy=5mm, dz=5mm
Reference Value = 85.90 V/m; Power Drift = 0.16 dB
Peak SAR (extrapolated) = 27.7 W/kg
SAR(1 g) = 12.7 W/kg; SAR(10 g) = 5.71 W/kg
Maximum value of SAR (measured) = 20.0 W/kg

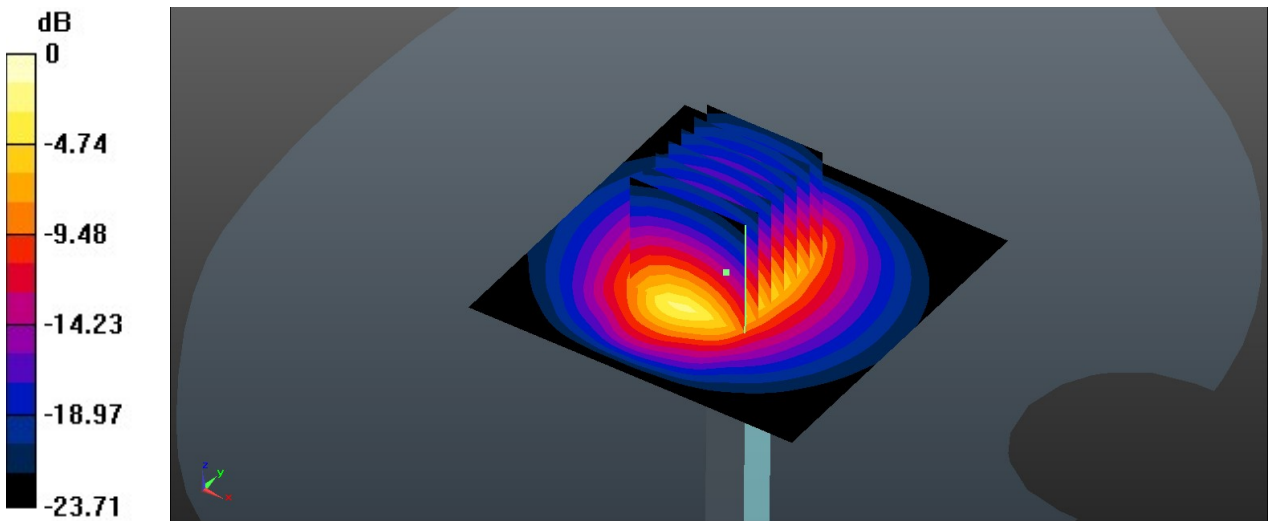

0 dB = 20.0 W/kg = 13.01 dBW/kg

Test Laboratory: Sporton International Inc. SAR/HAC Testing Lab Date: 2020.7.23

System Check_Head_5250MHz

DUT: D5GHzV2 - SN:1113

Communication System: UID 0, CW (0); Frequency: 5250 MHz;Duty Cycle: 1:1
Medium: HSL_5000 Medium parameters used: f = 5250 MHz; σ = 4.567 S/m; ε_r = 35.279; ρ = 1000 kg/m^3
Ambient Temperature：23.4 °C; Liquid Temperature：22.7 °C

DASY5 Configuration:
- Probe: EX3DV4 - SN3935; ConvF(5.04, 5.04, 5.04); Calibrated: 2020.5.27
- Sensor-Surface: 1.4mm (Mechanical Surface Detection)
- Electronics: DAE4 Sn1358; Calibrated: 2020.4.28
- Phantom: SAM1; Type: SAM; Serial: TP-1753
- Measurement SW: DASY52, Version 52.10 (4); SEMCAD X Version 14.6.14 (7483)

Pin=100mW/Area Scan (71x71x1): Interpolated grid: dx=1.000 mm, dy=1.000 mm
Maximum value of SAR (interpolated) = 19.6 W/kg

Pin=100mW/Zoom Scan (8x8x7)/Cube 0: Measurement grid: dx=4mm, dy=4mm, dz=1.4mm
Reference Value = 42.04 V/m; Power Drift = 0.02 dB
Peak SAR (extrapolated) = 34.1 W/kg
SAR(1 g) = 7.92 W/kg; SAR(10 g) = 2.25 W/kg
Maximum value of SAR (measured) = 19.1 W/kg

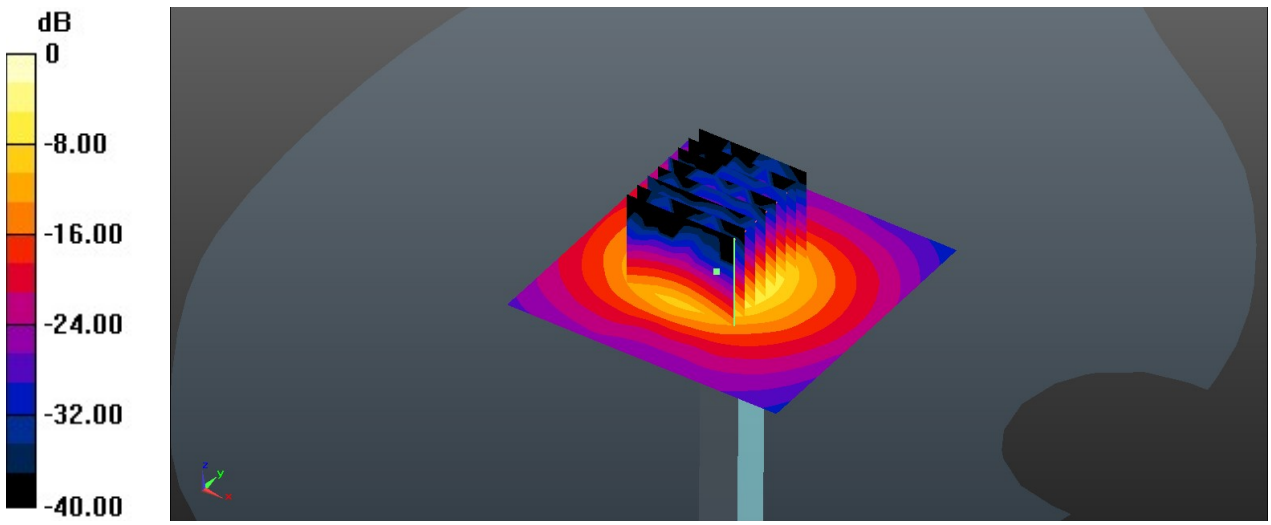

0 dB = 19.1 W/kg = 12.81 dBW/kg

Test Laboratory: Sporton International Inc. SAR/HAC Testing Lab Date: 2020.7.24

System Check_Head_5600MHz

DUT: D5GHzV2 - SN:1113

Communication System: UID 0, CW (0); Frequency: 5600 MHz;Duty Cycle: 1:1
Medium: HSL_5000 Medium parameters used: f = 5600 MHz; σ = 4.953 S/m; ε_r = 34.659; ρ = 1000 kg/m^3
Ambient Temperature：23.3 ℃; Liquid Temperature：22.8 ℃

DASY5 Configuration:
- Probe: EX3DV4 - SN3935; ConvF(4.76, 4.76, 4.76); Calibrated: 2020.5.27
- Sensor-Surface: 1.4mm (Mechanical Surface Detection)
- Electronics: DAE4 Sn1358; Calibrated: 2020.4.28
- Phantom: SAM1; Type: SAM; Serial: TP-1753
- Measurement SW: DASY52, Version 52.10 (4); SEMCAD X Version 14.6.14 (7483)

Pin=100mW/Area Scan (71x71x1): Interpolated grid: dx=1.000 mm, dy=1.000 mm
Maximum value of SAR (interpolated) = 19.5 W/kg

Pin=100mW/Zoom Scan (8x8x7)/Cube 0: Measurement grid: dx=4mm, dy=4mm, dz=1.4mm
Reference Value = 40.14 V/m; Power Drift = 0.03 dB
Peak SAR (extrapolated) = 33.9 W/kg
SAR(1 g) = 7.78 W/kg; SAR(10 g) = 2.2 W/kg
Maximum value of SAR (measured) = 19.2 W/kg

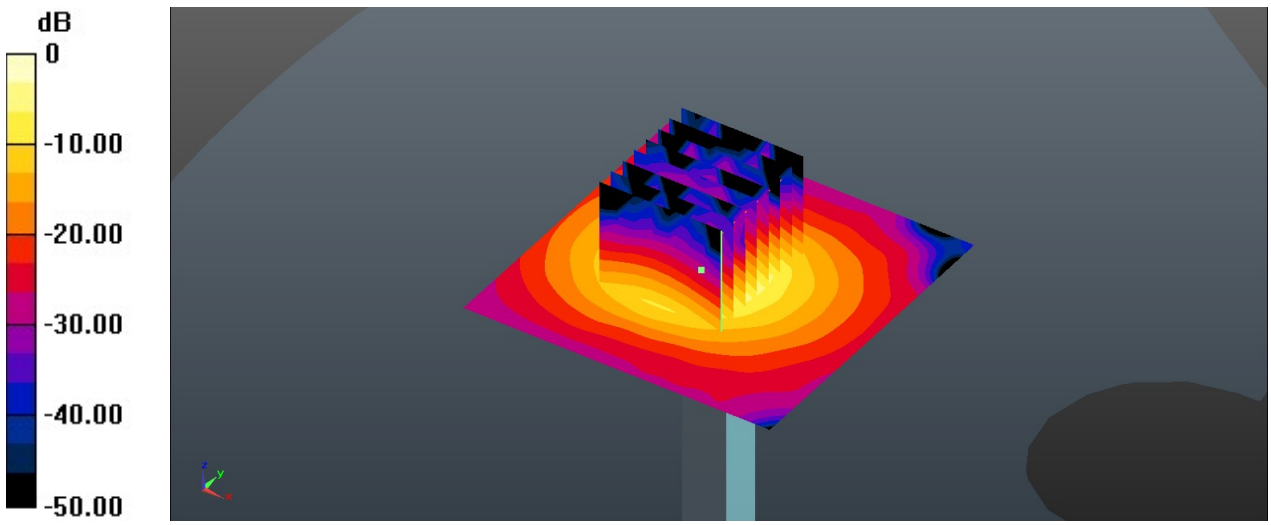

0 dB = 19.2 W/kg = 12.83 dBW/kg

Test Laboratory: Sporton International Inc. SAR/HAC Testing Lab Date: 2020.7.25

System Check_Head_5750MHz

DUT: D5GHzV2 - SN:1113

Communication System: UID 0, CW (0); Frequency: 5750 MHz;Duty Cycle: 1:1
Medium: HSL_5000 Medium parameters used: f = 5750 MHz; σ = 5.131 S/m; ε_r = 34.387; ρ = 1000 kg/m^3
Ambient Temperature：23.2 °C; Liquid Temperature：22.7 °C

DASY5 Configuration:
- Probe: EX3DV4 - SN3935; ConvF(4.67, 4.67, 4.67); Calibrated: 2020.5.27
- Sensor-Surface: 1.4mm (Mechanical Surface Detection)
- Electronics: DAE4 Sn1358; Calibrated: 2020.4.28
- Phantom: SAM1; Type: SAM; Serial: TP-1753
- Measurement SW: DASY52, Version 52.10 (4); SEMCAD X Version 14.6.14 (7483)

Pin=100mW/Area Scan (71x71x1): Interpolated grid: dx=1.000 mm, dy=1.000 mm
Maximum value of SAR (interpolated) = 16.3 W/kg

Pin=100mW/Zoom Scan (8x8x7)/Cube 0: Measurement grid: dx=4mm, dy=4mm, dz=1.4mm
Reference Value = 37.62 V/m; Power Drift = -0.04 dB
Peak SAR (extrapolated) = 27.0 W/kg
SAR(1 g) = 7.29 W/kg; SAR(10 g) = 2.27 W/kg
Maximum value of SAR (measured) = 16.8 W/kg

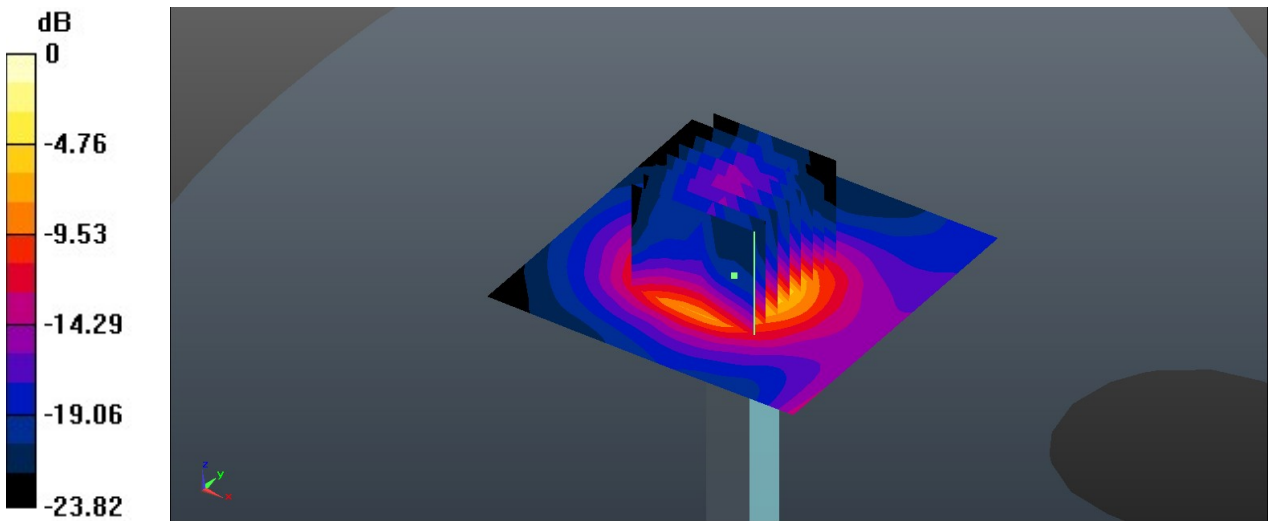

0 dB = 16.8 W/kg = 12.25 dBW/kg

Test Laboratory: Sporton International Inc. SAR/HAC Testing Lab Date: 2020.7.15

System Check_Head_2450MHz

DUT: D2450V2 - SN:908

Communication System: UID 0, CW (0); Frequency: 2450 MHz;Duty Cycle: 1:1
Medium: HSL_2450 Medium parameters used: f = 2450 MHz; σ = 1.838 S/m; ε_r = 38.262; ρ = 1000 kg/m^3
Ambient Temperature：23.3 °C; Liquid Temperature：22.7 °C

DASY5 Configuration:
- Probe: ES3DV3 - SN3293; ConvF(4.60, 4.60, 4.60); Calibrated: 2019.11.25
- Sensor-Surface: 3mm (Mechanical Surface Detection)
- Electronics: DAE4 Sn1338; Calibrated: 2019.11.20
- Phantom: SAM2; Type: SAM; Serial: TP-1503
- Measurement SW: DASY52, Version 52.10 (4); SEMCAD X Version 14.6.14 (7483)

Pin=250mW/Area Scan (71x71x1): Interpolated grid: dx=1.200 mm, dy=1.200 mm
Maximum value of SAR (interpolated) = 17.8 W/kg

Pin=250mW/Zoom Scan (7x7x7)/Cube 0: Measurement grid: dx=5mm, dy=5mm, dz=5mm
Reference Value = 92.70 V/m; Power Drift = 0.07 dB
Peak SAR (extrapolated) = 28.9 W/kg
SAR(1 g) = 13 W/kg; SAR(10 g) = 5.82 W/kg
Maximum value of SAR (measured) = 17.3 W/kg

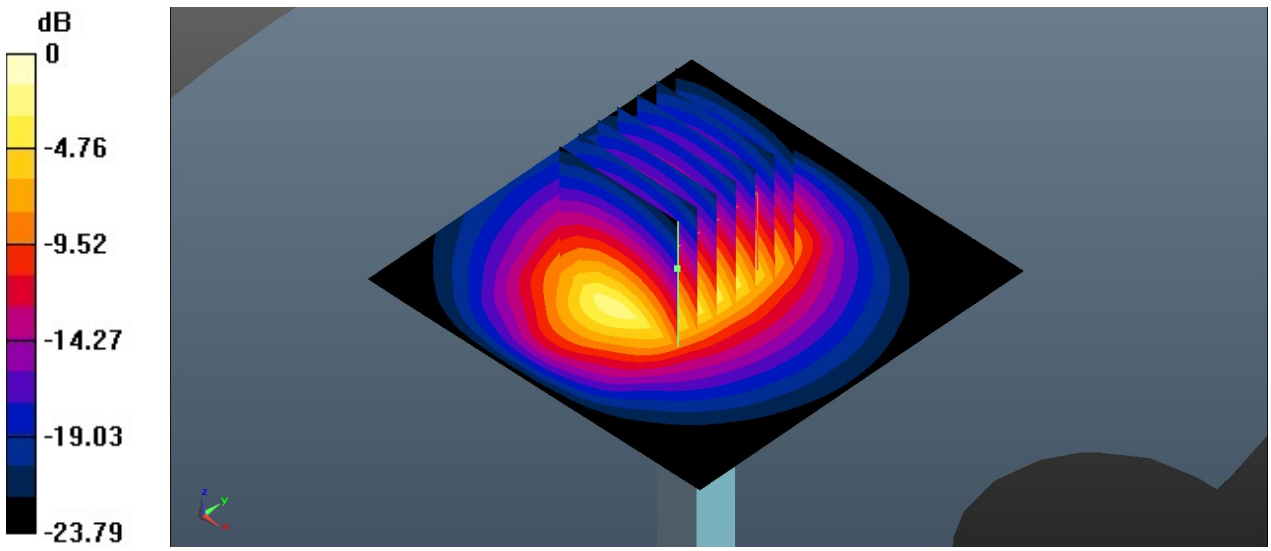

0 dB = 17.3 W/kg = 12.38 dBW/kg

Test Laboratory: Sporton International Inc. SAR/HAC Testing Lab Date: 2020.7.18

System Check_Head_5250MHz

DUT: D5GHzV2 - SN:1113

Communication System: UID 0, CW (0); Frequency: 5250 MHz;Duty Cycle: 1:1
Medium: HSL_5000 Medium parameters used: f = 5250 MHz; σ = 4.595 S/m; ε_r = 36.399; ρ = 1000 kg/m^3
Ambient Temperature：23.2 ℃; Liquid Temperature：22.7 ℃

DASY5 Configuration:
- Probe: EX3DV4 - SN3976; ConvF(5.37, 5.37, 5.37); Calibrated: 2020.1.27
- Sensor-Surface: 1.4mm (Mechanical Surface Detection)
- Electronics: DAE4 Sn1338; Calibrated: 2019.11.20
- Phantom: SAM1; Type: SAM; Serial: TP-1839
- Measurement SW: DASY52, Version 52.10 (4); SEMCAD X Version 14.6.14 (7483)

Pin=100mW/Area Scan (71x71x1): Interpolated grid: dx=1.000 mm, dy=1.000 mm
Maximum value of SAR (interpolated) = 19.8 W/kg

Pin=100mW/Zoom Scan (8x8x7)/Cube 0: Measurement grid: dx=4mm, dy=4mm, dz=1.4mm
Reference Value = 46.44 V/m; Power Drift = 0.16 dB
Peak SAR (extrapolated) = 30.5 W/kg
SAR(1 g) = 8.47 W/kg; SAR(10 g) = 2.47 W/kg
Maximum value of SAR (measured) = 19.1 W/kg

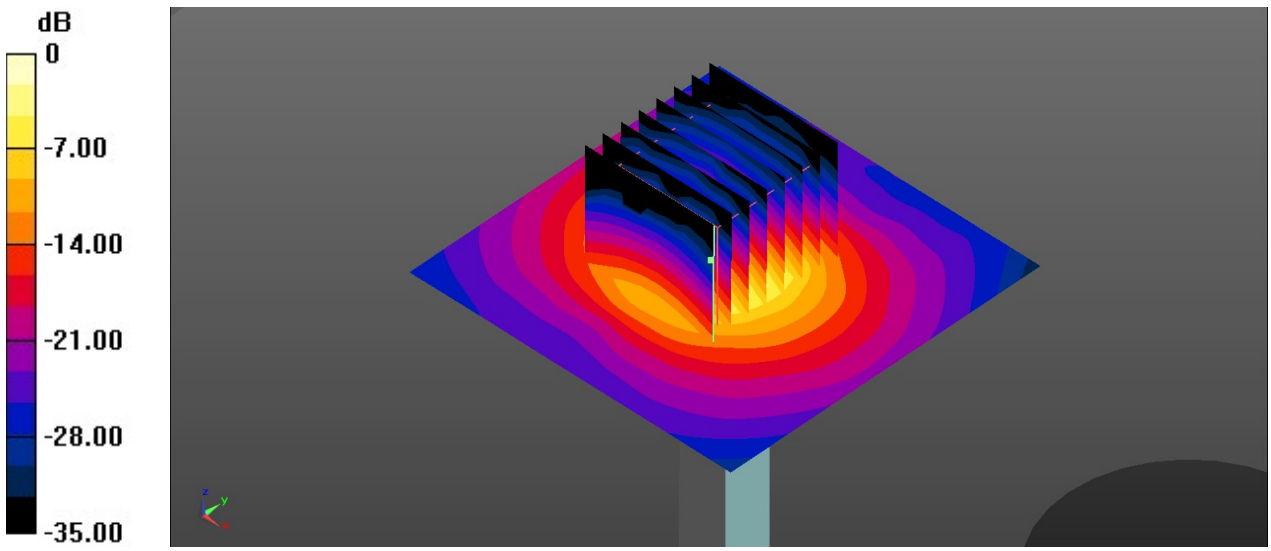

0 dB = 19.1 W/kg = 12.81 dBW/kg

Test Laboratory: Sporton International Inc. SAR/HAC Testing Lab Date: 2020.7.20

System Check_Head_5600MHz

DUT: D5GHzV2 - SN:1113

Communication System: UID 0, CW (0); Frequency: 5600 MHz;Duty Cycle: 1:1
Medium: HSL_5000 Medium parameters used: f = 5600 MHz; σ = 4.985 S/m; ε_r = 35.825; ρ = 1000 kg/m^3
Ambient Temperature：23.3 ℃; Liquid Temperature：22.8 ℃

DASY5 Configuration:
- Probe: EX3DV4 - SN3976; ConvF(4.85, 4.85, 4.85); Calibrated: 2020.1.27
- Sensor-Surface: 1.4mm (Mechanical Surface Detection)
- Electronics: DAE4 Sn1338; Calibrated: 2019.11.20
- Phantom: SAM1; Type: SAM; Serial: TP-1839
- Measurement SW: DASY52, Version 52.10 (4); SEMCAD X Version 14.6.14 (7483)

Pin=100mW/Area Scan (71x71x1): Interpolated grid: dx=1.000 mm, dy=1.000 mm
Maximum value of SAR (interpolated) = 21.9 W/kg

Pin=100mW/Zoom Scan (8x8x7)/Cube 0: Measurement grid: dx=4mm, dy=4mm, dz=1.4mm
Reference Value = 45.01 V/m; Power Drift = 0.17 dB
Peak SAR (extrapolated) = 34.8 W/kg
SAR(1 g) = 8.93 W/kg; SAR(10 g) = 2.59 W/kg
Maximum value of SAR (measured) = 20.5 W/kg

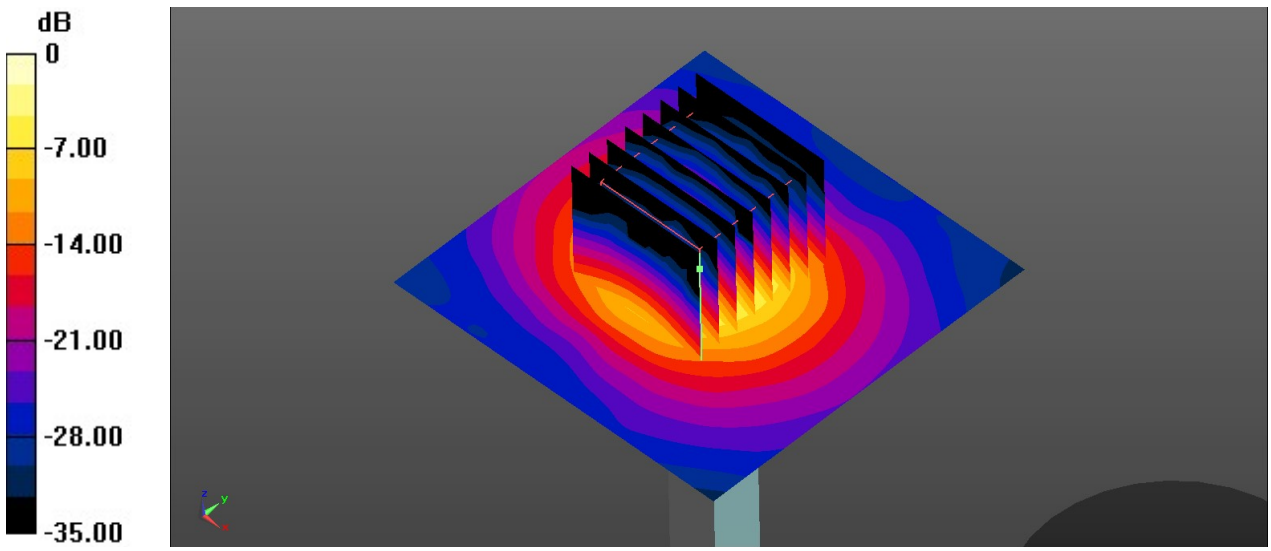

0 dB = 20.5 W/kg = 13.12 dBW/kg

Test Laboratory: Sporton International Inc. SAR/HAC Testing Lab Date: 2020.7.22

System Check_Head_5750MHz

DUT: D5GHzV2 - SN:1113

Communication System: UID 0, CW (0); Frequency: 5750 MHz;Duty Cycle: 1:1
Medium: HSL_5000 Medium parameters used: f = 5750 MHz; σ = 5.16 S/m; ε_r = 35.569; ρ = 1000 kg/m^3
Ambient Temperature：23.2 ℃; Liquid Temperature：22.6 ℃

DASY5 Configuration:
- Probe: EX3DV4 - SN3976; ConvF(4.87, 4.87, 4.87); Calibrated: 2020.1.27
- Sensor-Surface: 1.4mm (Mechanical Surface Detection)
- Electronics: DAE4 Sn1338; Calibrated: 2019.11.20
- Phantom: SAM1; Type: SAM; Serial: TP-1839
- Measurement SW: DASY52, Version 52.10 (4); SEMCAD X Version 14.6.14 (7483)

Pin=100mW/Area Scan (71x71x1): Interpolated grid: dx=1.000 mm, dy=1.000 mm
Maximum value of SAR (interpolated) = 20.3 W/kg

Pin=100mW/Zoom Scan (8x8x7)/Cube 0: Measurement grid: dx=4mm, dy=4mm, dz=1.4mm
Reference Value = 41.83 V/m; Power Drift = 0.02 dB
Peak SAR (extrapolated) = 34.5 W/kg
SAR(1 g) = 8.52 W/kg; SAR(10 g) = 2.46 W/kg
Maximum value of SAR (measured) = 20.0 W/kg

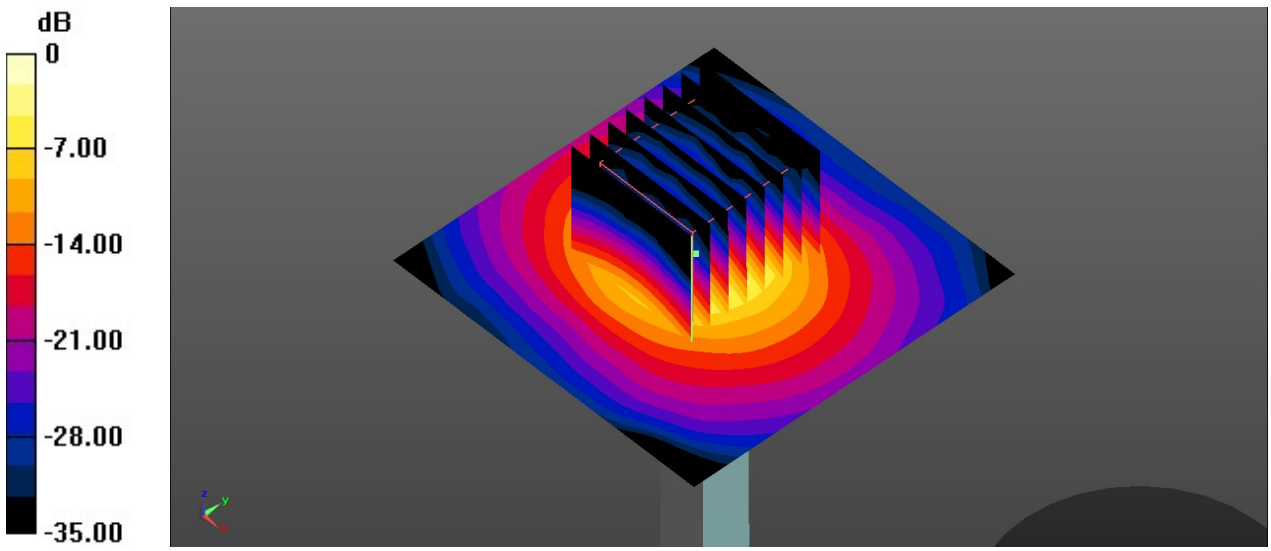

0 dB = 20.0 W/kg = 13.01 dBW/kg

Appendix B. Plots of High SAR Measurement

The plots are shown as follows.