VARIANT FCC TEST REPORT

(Part 15, Subpart E)

Applicant:	HMD Global Oy
Address:	Bertel Jungin aukio 9, 02600 Espoo, Finland

Manufacturer or Supplier:	HMD Global Oy
Address:	Bertel Jungin aukio 9, 02600 Espoo, Finland
Product:	Multi-band GSM/WCDMA/LTE phone with Bluetooth&WLAN
Brand Name:	NOKIA
Model Name:	TA-1412
FCC ID:	2AJOTTA-1412
Date of tests:	Nov. 25, 2021 ~ Oct. 10, 2022

The tests have been carried out according to the requirements of the following standard:

☒ **FCC Part 15, Subpart E, Section 15.407**

CONCLUSION: The submitted sample was found to COMPLY with the test requirement

Prepared by Simon Wang Engineer / Mobile Department	Approved by Luke Lu Manager / Mobile Department
Simon Wang Date: Oct. 10, 2022	Luke Lu Date: Oct. 10, 2022

This report is governed by, and incorporates by reference, the Conditions of Testing as posted at the date of issuance of this report at http://www.bureauveritas.com/home/about-us/our-business/cps/about-us/terms-conditions/ and is intended for your exclusive use. Any copying or replication of this report to or for any other person or entity, or use of our name or trademark, is permitted only with our prior written permission. This report sets forth our findings solely with respect to the test samples identified herein. The results set forth in this report are not indicative or representative of the quality or characteristics of the lot from which a test sample was taken or any similar or identical product unless specifically and expressly noted. Our report includes all of the tests requested by you and the results thereof based upon the information that you provided to us. Measurement uncertainty is only provided upon request for accredited tests. Statements of conformity are based on simple acceptance criteria without taking measurement uncertainty into account, unless otherwise requested in writing. You have 60 days from date of issuance of this report to notify us of any material error or omission caused by our negligence or if you require measurement uncertainty; provided, however, that such notice shall be in writing and shall specifically address the issue you wish to raise. A failure to raise such issue within the prescribed time shall constitute your unqualified acceptance of the completeness of this report, the tests conducted and the correctness of the report contents.

TABLE OF CONTENTS

RELEASE CONTROL RECORD 4

1 SUMMARY OF TEST RESULTS 5
1.1 MEASUREMENT UNCERTAINTY 5
2 GENERAL INFORMATION 6
2.1 GENERAL DESCRIPTION OF EUT 6
2.2 DESCRIPTION OF TEST MODES 9
2.2.1 TEST MODE APPLICABILITY AND TESTED CHANNEL DETAIL 11
2.3 DUTY CYCLE OF TEST SIGNAL 16
2.4 DESCRIPTION OF SUPPORT UNITS 16
2.4.1 CONFIGURATION OF SYSTEM UNDER TEST 17
2.5 GENERAL DESCRIPTION OF APPLIED STANDARDS 17

3 TEST TYPES AND RESULTS 18

3.1 RADIATED EMISSION AND BANDEDGE MEASUREMENT 18
3.1.1 LIMITS OF RADIATED EMISSION AND BANDEDGE MEASUREMENT 18
3.1.2 LIMITS OF UNWANTED EMISSION 18
3.1.3 TEST INSTRUMENTS 19
3.1.4 TEST PROCEDURES 21
3.1.5 DEVIATION FROM TEST STANDARD 21
3.1.6 TEST SETUP 22
3.1.7 EUT OPERATING CONDITION 23
3.1.8 TEST RESULTS 24
3.2 OUT OF BAND EMISSION MEASUREMENT 101
3.2.1 LIMITS OF OUT OF BAND EMISSION MEASUREMENT 101
3.2.2 TEST INSTRUMENTS 102
3.2.3 TEST PROCEDURES 102
3.2.4 DEVIATION FROM TEST STANDARD 102
3.2.5 TEST SETUP 102
3.2.6 EUT OPERATING CONDITION 102
3.2.7 TEST RESULTS 103
3.3 CONDUCTED EMISSION MEASUREMENT 104
3.3.1 LIMITS OF CONDUCTED EMISSION MEASUREMENT 104
3.3.2 TEST INSTRUMENTS 104
3.3.3 TEST PROCEDURES 104

3.3.4 DEVIATION FROM TEST STANDARD 105
3.3.5 TEST SETUP 105
3.3.6 EUT OPERATING CONDITIONS 105
3.3.7 TEST RESULTS 106
3.4 MAXIMUM CONDUCTED OUTPUT POWER MEASUREMENT 108
3.4.1 LIMITS OF MAXIMUM CONDUCTED OUTPUT POWER MEASUREMENT 108
3.4.2 TEST SETUP 109
3.4.3 TEST INSTRUMENTS 109
3.4.4 TEST PROCEDURE 110
3.4.5 DEVIATION FROM TEST STANDARD 112
3.4.6 EUT OPERATING CONDITIONS 112
3.4.7 TEST RESULTS 113
3.5 MAXIMUM POWER SPECTRAL DENSITY MEASUREMENT 114
3.5.1 LIMITS OF MAXIMUM POWER SPECTRAL DENSITY MEASUREMENT 114
3.5.2 TEST SETUP 114
3.5.3 TEST INSTRUMENTS 114
3.5.4 TEST PROCEDURES 115
3.5.5 DEVIATION FROM TEST STANDARD 115
3.5.6 EUT OPERATING CONDITIONS 115
3.5.7 TEST RESULTS 116

4 PHOTOGRAPHS OF THE TEST CONFIGURATION 117

5 MODIFICATIONS RECORDERS FOR ENGINEERING CHANGES TO THE EUT BY THE LAB118

6 APPENDIX 119

RELEASE CONTROL RECORD

ISSUE NO.	REASON FOR CHANGE	DATE ISSUED
W7L-P21100018-1RF03	Original release	Dec. 13, 2021
W7L-P21100018-2RF03	The model name is revised based on the W7L-P21100018-1RF03 report. The two models are only the difference between single SIM and double SIM, and the data reflects the original report data.	Dec. 25, 2021
W7L-P22090015-5RF03	Based on the original product changing the packaging factory of the chip and software version, removed Aohai_A829US adapter, BRL_ CB - 36A USB cable, Saibao_ CB - 12A USB cable, LEADER_ HS-34 earphone, added Saibao_AC-2A USB cable. The new sample verify CE, Power(Only verify) and RSE worst case (802.11n (40MHz) CH102),other test data is copied from the original test report W7L-P21100018-2RF03.	Oct. 10, 2022

1 SUMMARY OF TEST RESULTS

The EUT has been tested according to the following specifications:

APPLIED STANDARD: FCC PART 15, SUBPART E		
STANDARD SECTION	**TEST TYPE AND LIMIT**	**RESULT**
15.407(b)(6)	AC Power Conducted Emission	Compliance
15.407(b) (1/2/3/4/5)	Radiated Emission & Band Edge Measurement	Compliance
15.407(a/1/2/3)	Maximum conducted output Power	Compliance
15.407(a/1/2/3)	Peak Power Spectral Density	Compliance
15.403(i)	26 dB Bandwidth	Compliance
15.407(e)	6 dB Bandwidth	Compliance
15.203	Antenna Requirement	Compliance

Note:1. The power table are not updated,Because the same as for original case power in Verified power.

1.1 MEASUREMENT UNCERTAINTY

Where relevant, the following measurement uncertainty levels have been estimated for tests performed on the EUT as specified in CISPR 16-4-2:

MEASUREMENT	UNCERTAINTY
AC Power Conducted emissions	±2.70dB
Radiated emissions (30MHz~1GMHz)	±4.98dB
Radiated emissions (1GMHz ~6GMHz)	±4.70dB
Radiated emissions (6GMHz ~18GMHz)	±4.60dB
Radiated emissions (18GMHz ~40GMHz)	±4.12dB
Conducted emissions	±4.01dB
Occupied Channel Bandwidth	±43.58KHz
Conducted Output power	±2.06dB
Power Spectral Density	±0.85 dB

This uncertainty represents an expanded uncertainty expressed at approximately the 95% confidence level using a coverage factor of k = 2.

2 GENERAL INFORMATION

2.1 GENERAL DESCRIPTION OF EUT

PRODUCT	Multi-band GSM/WCDMA/LTE phone with Bluetooth&WLAN
BRAND NAME	NOKIA
MODEL NAME	TA-1412
NOMINAL VOLTAGE	5.0Vdc(adapter or host equipment) 3.85Vdc (Li-ion, battery)
MODULATION	OFDM
TRANSFER RATE	802.11a: 54.0/ 48.0/ 36.0/ 24.0/ 18.0/ 12.0/ 9.0/ 6.0Mbps 802.11n: up to MCS7 802.11ac: up to 390.0Mbps
OPERATING FREQUENCY	5180 ~ 5240MHz, 5260 ~ 5320MHz, 5500 ~ 5700MHz, 5745 ~ 5825MHz
NUMBER OF CHANNEL	5180 ~ 5240MHz: 4 for 802.11a, 802.11n, 802.11ac (20MHz) 2 for 802.11n, 802.11ac (40MHz) 1 for 802.11ac (80MHz) 5260 ~ 5320MHz: 4 for 802.11a, 802.11n, 802.11ac (20MHz) 2 for 802.11n, 802.11ac (40MHz) 1 for 802.11ac (80MHz) 5500 ~ 5700MHz: 11 for 802.11a, 802.11n, 802.11ac(20MHz) 5 for 802.11n, 802.11ac (40MHz) 2 for 802.11ac (80MHz) 5745 ~ 5825MHz: 4 for 802.11a, 802.11n, 802.11ac (20MHz) 2 for 802.11n, 802.11ac (40MHz) 1 for 802.11ac (80MHz)
AVERAGE POWER	80.91mW for 5180 ~ 5240MHz 85.90mW for 5260 ~ 5320MHz 84.14mW for 5500 ~ 5700MHz 84.92mW for 5745 ~ 5825MHz
ANTENNA TYPE	Fixed Internal Antenna
ANTENNA GAIN	-0.6 dBi for 5180 ~ 5240MHz -0.6 dBi for 5260 ~ 5320MHz -0.6 dBi for 5500 ~ 5720MHz -0.6 dBi for 5745 ~ 5825MHz
HW VERSION	19655-1-11M12
SW VERSION	00WW_1_520
I/O PORTS	Refer to user's manual
CABLE SUPPLIED	USB1 cable: unshielded without ferrite, 1.0meter USB2 cable: unshielded without ferrite, 1.0meter Earphone1: non-shielded cable, with w/o ferrite core, 1.2 meter

NOTE:

1. For a more detailed features description, please refer to the manufacturer's specifications or the user's manual.

2. The EUT incorporates a SISO function. Physically, the EUT provides one completed transmitter and one receiver.

MODULATION MODE	TX FUNCTION
802.11a	1TX/1RX
802.11n/802.11ac (20MHz)	1TX/1RX
802.11n/802.11ac (40MHz)	1TX/1RX
802.11ac (80MHz)	1TX/1RX

3. For the test results, the EUT had been tested with all conditions. But only the worst case was shown in test report.

List of Accessory:

ACCESSORIES	BRAND	MANUFACTURER	MODEL	SPECIFICATION
Battery	Nokia	Hunan Gaoyuan Battery Co., Ltd.	WT341	Capacity：3.85 Vdc, 4900mAh
AC Adapter 1	Nokia	ShenZhenBaiJunDa ElectronicCO.,LTD.	AD-010U	I/P: 100-240Vac, 0.35A, O/P: 5.0Vdc, 2.0A
AC Adapter 2	Nokia	SHENZHEN TIANYIN ELECTRONICS CO., LTD.	CH-21U	I/P: 100-240Vac, 0.3A, O/P: 5.0Vdc, 2.0A
AC Adapter 3	Nokia	YuTong Electronics(HuiZhou) Co.,Ltd	PA-US5V2A-03 6	I/P: 100-240Vac, 0.5A, O/P: 5.0Vdc, 2.0A
Earphone 1	Nokia	Guangdong Wivtak Technology Co., Ltd.	HS-34	Signal Line, 1.2meter
USB Cable 1	Nokia	HUIZHOU WASHIN ELECTRONICS CO.,LTD	CB-36A	Signal Line, 1.0meter
USB Cable 2	Nokia	Saibao(Jiangi) Communication Industial Co.,Ltd	AC-2A	Signal Line, 1.0meter

NOTE：5G WIFI test in the engineer mode,power setting at “ MAXIMUM CONDUCTED OUTPUT POWER”, the steps for entering engineering mode are as follows:

1. In the finger plate, dial the code for entering Engineer mode: *#*#83781#*#*
2. EngineerMode->CONNECTIVITY->Wifi->Tx

2.2 DESCRIPTION OF TEST MODES

FOR 5150 ~ 5250MHz

4 channels are provided for 802.11a, 802.11n, 802.11ac (20MHz):

CHANNEL	FREQUENCY	CHANNEL	FREQUENCY
36	5180 MHz	44	5220 MHz
40	5200 MHz	48	5240 MHz

2 channels are provided for 802.11n, 802.11ac (40MHz):

CHANNEL	FREQUENCY	CHANNEL	FREQUENCY
38	5190 MHz	46	5230 MHz

1 channel is provided for 802.11ac (80MHz):

CHANNEL	FREQUENCY	CHANNEL	FREQUENCY
42	5210 MHz		

FOR 5250 ~ 5350MHz

4 channels are provided for 802.11a, 802.11n, 802.11ac (20MHz):

CHANNEL	FREQUENCY	CHANNEL	FREQUENCY
52	5260 MHz	60	5300 MHz
56	5280 MHz	64	5320 MHz

2 channels are provided for 802.11n, 802.11ac (40MHz):

CHANNEL	FREQUENCY	CHANNEL	FREQUENCY
54	5270 MHz	62	5310 MHz

1 channel is provided for 802.11ac (80MHz):

CHANNEL	FREQUENCY	CHANNEL	FREQUENCY
58	5290 MHz		

FOR 5470 ~ 5725MHz

11 channels are provided for 802.11a, 802.11n, 802.11ac (20MHz):

CHANNEL	FREQUENCY	CHANNEL	FREQUENCY
100	5500 MHz	124	5620MHz
104	5520 MHz	128	5640MHz
108	5540 MHz	132	5660 MHz
112	5560 MHz	136	5680 MHz
116	5580 MHz	140	5700 MHz
120	5600 MHz		

5 channels are provided for 802.11n, 802.11ac (40MHz):

CHANNEL	FREQUENCY	CHANNEL	FREQUENCY
102	5510 MHz	126	5630MHz
110	5550 MHz	134	5670 MHz
118	5590 MHz		

2 channel is provided for 802.11ac (80MHz):

CHANNEL	FREQUENCY	CHANNEL	FREQUENCY
106	5530 MHz		
122	5610 MHz		

FOR 5725 ~ 5850MHz

5 channels are provided for 802.11a, 802.11n, 802.11ac (20MHz):

CHANNEL	FREQUENCY	CHANNEL	FREQUENCY
149	5745 MHz	161	5805 MHz
153	5765 MHz	165	5825 MHz
157	5785 MHz		

2 channels are provided for 802.11n, 802.11ac (40MHz):

CHANNEL	FREQUENCY	CHANNEL	FREQUENCY
151	5755 MHz	159	5795 MHz

1 channel is provided for 802.11ac (80MHz):

CHANNEL	FREQUENCY	CHANNEL	FREQUENCY
155	5775 MHz		

2.2.1 TEST MODE APPLICABILITY AND TESTED CHANNEL DETAIL

EUT CONFIGURE MODE	APPLICABLE TO				DESCRIPTION
	RE≥1G	RE<1G	PLC	APCM	
A	√	√	√	-	**Powered by Adapter with wifi(5G) link**
B	-	-	-	√	Powered by Battery with wifi(5G) link
C	-	-	-	-	Powered by USB with wifi(5G) link

Where **RE≥1G:** Radiated Emission above 1GHz **RE<1G:** Radiated Emission below 1GHz
PLC: Power Line Conducted Emission **APCM:** Antenna Port Conducted Measurement

NOTE:
The EUT had been pre-tested on the positioned of each 3 axis. The worst case was found when positioned on **X-plane.**
NOTE: "-"means no effect.

RADIATED EMISSION TEST (BELOW 1GHz):

☒ Pre-Scan has been conducted to determine the worst-case mode from all possible combinations between available modulations, data rates and antenna ports (if EUT with antenna diversity architecture).
☒ Following channel(s) was (were) selected for the final test as listed below.

EUT CONFIGURE MODE	MODE	FREQ. BAND (MHz)	AVAILABLE CHANNEL	TESTED CHANNEL	MODULATION	DATA RATE (Mbps)
A	802.11n (40MHz)	5500-5700	102 to 134	102	OFDM	MCS0

RADIATED EMISSION TEST (ABOVE 1GHz):

☒ Pre-Scan has been conducted to determine the worst-case mode from all possible combinations between available modulations, data rates and antenna ports (if EUT with antenna diversity architecture).

☒ Following channel(s) was (were) selected for the final test as listed below.

EUT CONFIGURE MODE	MODE	FREQ. BAND (MHz)	AVAILABLE CHANNEL	TESTED CHANNEL	MODULATION	DATA RATE (Mbps)
A	802.11a	5180-5240	36 to 48	36, 40, 48	OFDM	6.0
A	802.11n (20MHz)		36 to 48	36, 40, 48	OFDM	MCS0
A	802.11n (40MHz)		38 to 46	38, 46	OFDM	MCS0
A	802.11ac (20MHz)		36 to 48	36, 40, 48	OFDM	MCS0
A	802.11ac (40MHz)		38 to 46	38, 46	OFDM	MCS0
A	802.11ac (80MHz)		42	42	OFDM	MCS0
A	802.11a	5260-5320	52 to 64	52, 60, 64	OFDM	6.0
A	802.11n (20MHz)		52 to 64	52, 60, 64	OFDM	MCS0
A	802.11n (40MHz)		54 to 62	54, 62	OFDM	MCS0
A	802.11ac (20MHz)		52 to 64	52, 60, 64	OFDM	MCS0
A	802.11ac (40MHz)		54 to 62	54, 62	OFDM	MCS0
A	802.11ac (80MHz)		58	58	OFDM	MCS0
A	802.11a	5500-5700	100 to 140	100, 116, 140	OFDM	6.0
A	802.11n (20MHz)		100 to 140	100, 116, 140	OFDM	MCS0
A	802.11n (40MHz)		102 to 134	102, 110, 134	OFDM	MCS0
A	802.11ac (20MHz)		100 to 140	100, 116, 140	OFDM	MCS0
A	802.11ac (40MHz)		102 to 134	102, 110, 134	OFDM	MCS0
A	802.11ac (80MHz)		106 to 122	106, 122	OFDM	MCS0
A	802.11a	5745-5850	149 to 165	149, 157,165	OFDM	6.0
A	802.11n (20MHz)		149 to 165	149, 157,165	OFDM	MCS0
A	802.11ac (40MHz)		151 to 159	151, 159	OFDM	MCS0
A	802.11ac (20MHz)		149 to 165	149, 157,165	OFDM	MCS0
A	802.11n (40MHz)		151 to 159	151, 159	OFDM	MCS0
A	802.11ac (80MHz)		155	155	OFDM	MCS0

POWER LINE CONDUCTED EMISSION TEST:

☒ Pre-Scan has been conducted to determine the worst-case mode from all possible combinations between available modulations, data rates and antenna ports (if EUT with antenna diversity architecture).

☒ Following channel(s) was (were) selected for the final test as listed below.

EUT CONFIGURE MODE	MODE	FREQ. BAND (MHz)	AVAILABLE CHANNEL	TESTED CHANNEL	MODULATION	DATA RATE (Mbps)
A	802.11n (40MHz)	5180-5240	36 to 48	48	OFDM	MCS0

BANDEDGE MEASUREMENT:

☒ Pre-Scan has been conducted to determine the worst-case mode from all possible combinations between available modulations, data rates and antenna ports (if EUT with antenna diversity architecture).

☒ Following channel(s) was (were) selected for the final test as listed below.

EUT CONFIGURE MODE	MODE	FREQ. BAND (MHz)	AVAILABLE CHANNEL	TESTED CHANNEL	MODULATION	DATA RATE (Mbps)
A	802.11a	5180-5240	36 to 48	36, 48	OFDM	6.0
A	802.11n (20MHz)		36 to 48	36, 48	OFDM	MCS0
A	802.11n (40MHz)		38 to 46	38, 46	OFDM	MCS0
A	802.11ac (20MHz)		36 to 48	36, 48	OFDM	MCS0
A	802.11ac (40MHz)		38 to 46	38, 46	OFDM	MCS0
A	802.11ac (80MHz)		42	42	OFDM	MCS0
A	802.11a	5260-5320	52 to 64	52, 64	OFDM	6.0
A	802.11n (20MHz)		52 to 64	52, 64	OFDM	MCS0
A	802.11n (40MHz)		54 to 62	54, 62	OFDM	MCS0
A	802.11ac (20MHz)		52 to 64	52, 64	OFDM	MCS0
A	802.11ac (40MHz)		54 to 62	54, 62	OFDM	MCS0
A	802.11ac (80MHz)		58	58	OFDM	MCS0
A	802.11a	5500-5700	100 to 140	100, 140	OFDM	6.0
A	802.11n (20MHz)		100 to 140	100, 140	OFDM	MCS0
A	802.11n (40MHz)		102 to 134	102, 134	OFDM	MCS0
A	802.11ac (20MHz)		100 to 140	100, 140	OFDM	MCS0
A	802.11ac (40MHz)		102 to 134	102, 134	OFDM	MCS0
A	802.11ac (80MHz)		106 to 122	106, 122	OFDM	MCS0

EUT CONFIGURE MODE	MODE	FREQ. BAND (MHz)	AVAILABLE CHANNEL	TESTED CHANNEL	MODULATION	DATA RATE (Mbps)
A	802.11a	5745-5825	149 to 165	149, 165	OFDM	6.0
A	802.11n (20MHz)		149 to 165	149, 165	OFDM	MCS0
A	802.11n (40MHz)		151 to 159	151, 159	OFDM	MCS0
A	802.11ac (20MHz)		149 to 165	149, 165	OFDM	MCS0
A	802.11ac (40MHz)		151 to 159	151, 159	OFDM	MCS0
A	802.11ac (80MHz)		155	155	OFDM	MCS0

ANTENNA PORT CONDUCTED MEASUREMENT:

☒ This item includes all test value of each mode, but only includes spectrum plot of worst value of each mode.

☒ Pre-Scan has been conducted to determine the worst-case mode from all possible combinations between available modulations, data rates and antenna ports (if EUT with antenna diversity architecture).

☒ Following channel(s) was (were) selected for the final test as listed below.

EUT CONFIGURE MODE	MODE	FREQ. BAND (MHz)	AVAILABLE CHANNEL	TESTED CHANNEL	MODULATION	DATA RATE (Mbps)
A	802.11a	5180-5240	36 to 48	36, 40, 48	OFDM	6.0
A	802.11n (20MHz)		36 to 48	36, 40, 48	OFDM	MCS0
A	802.11n (40MHz)		38 to 46	38, 46	OFDM	MCS0
A	802.11ac (20MHz)		36 to 48	36, 40, 48	OFDM	MCS0
A	802.11ac (40MHz)		38 to 46	38, 46	OFDM	MCS0
A	802.11ac (80MHz)		42	42	OFDM	MCS0
A	802.11a	5260-5320	52 to 64	52, 60, 64	OFDM	6.0
A	802.11n (20MHz)		52 to 64	52, 60, 64	OFDM	MCS0
A	802.11n (40MHz)		54 to 62	54, 62	OFDM	MCS0
A	802.11ac (20MHz)		52 to 64	52, 60, 64	OFDM	MCS0
A	802.11ac (40MHz)		54 to 62	54, 62	OFDM	MCS0
A	802.11ac (80MHz)		58	58	OFDM	MCS0
A	802.11a	5500-5700	100 to 140	100, 116, 140	OFDM	6.0

A	802.11n (20MHz)		100 to 140	100, 116, 140	OFDM	MCS0
A	802.11n (40MHz)		102 to 134	102, 110, 134	OFDM	MCS0
A	802.11ac (20MHz)		100 to 140	100, 116, 140	OFDM	MCS0
A	802.11ac (40MHz)		102 to 134	102, 110, 134	OFDM	MCS0
A	802.11ac (80MHz)		106 to 122	106, 122	OFDM	MCS0
A	802.11a	5745-5850	149 to 165	149, 157,165	OFDM	6.0
A	802.11n (20MHz)		149 to 165	149, 157,165	OFDM	MCS0
A	802.11n (40MHz)		151 to 159	151, 159	OFDM	MCS0
A	802.11ac (20MHz)		149 to 165	149, 157,165	OFDM	MCS0
A	802.11ac (40MHz)		151 to 159	151, 159	OFDM	MCS0
A	802.11ac (80MHz)		155	155	OFDM	MCS0

TEST CONDITION:

APPLICABLE TO	ENVIRONMENTAL CONDITIONS	INPUT POWER	TESTED BY
RE<1G	23deg. C, 70%RH	DC 5V By Adapter	Star Le
RE≥1G	23deg. C, 70%RH	DC5V By Adapter	Star Le
PLC	25deg. C, 52%RH	DC5V By Adapter	Jimmy Liu
APCM	25deg. C, 60%RH	DC 3.85V By Battery	Lily Zhao

2.3 DUTY CYCLE OF TEST SIGNAL

Please Refer to Appendix B/C Of this test report.

WORST-CASE DATA:

Measured Duty Cycle		
Mode		Duty Cycle [%]
		ANT1
5GHZ	11a	90.32
	11n20	88.72
	11n40	79.73
	11ac20	88.81
	11ac40	80.00
	11ac80	66.67

Note:
Duty cycle of test signal is < 98%, duty factor shall be considered.

2.4 DESCRIPTION OF SUPPORT UNITS

The EUT has been tested as an independent unit together with other necessary accessories or support units. The following support units or accessories were used to form a representative test configuration during the tests.

NO.	PRODUCT	BRAND	MODEL NO.	SERIAL NO.	FCC ID
1	Desktop	Lenovo	M73 SFF	PC04GRQV	N/A
2	Desktop	Lenovo	M73 SFF	PC06CS27	N/A
3	Laptop	Lenovo	Thnikpad L440	R90FTFKN	N/A

NO.	SIGNAL CABLE DESCRIPTION OF THE ABOVE SUPPORT UNITS
1	AC Line: Unshielded, Detachable 1.5m
2	AC Line: Unshielded, Detachable 1.5m
3	AC Line: Unshielded, Detachable 1.5m

2.4.1 CONFIGURATION OF SYSTEM UNDER TEST

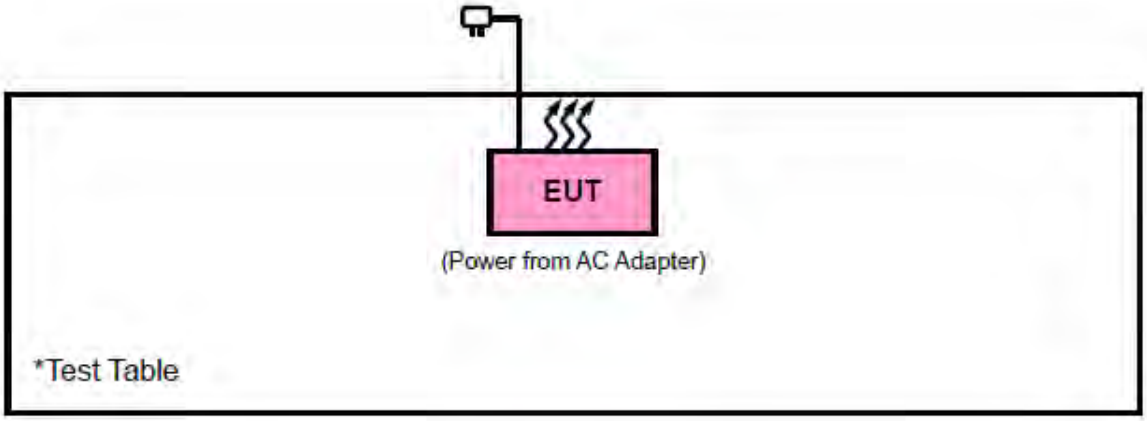

2.5 GENERAL DESCRIPTION OF APPLIED STANDARDS

The EUT is a RF Product. According to the specifications of the manufacturer, it must comply with the requirements of the following standards:

FCC Part 15, Subpart E (15.407)
KDB 789033 D02 General U-NII Test Procedures New Rules v02r01
ANSI C63.10-2013

All test items have been performed and recorded as per the above standards.

NOTE: The EUT is also considered as a kind of computer peripheral, because the connection to computer is necessary for typical use. It has been verified to comply with the requirements of FCC Part 15, Subpart B, Class B (Certification). The test report has been issued separately.

3 TEST TYPES AND RESULTS

3.1 RADIATED EMISSION AND BANDEDGE MEASUREMENT

3.1.1 LIMITS OF RADIATED EMISSION AND BANDEDGE MEASUREMENT

Radiated emissions which fall in the restricted bands must comply with the radiated emission limits specified as below table:

FREQUENCIES (MHz)	FIELD STRENGTH (microvolts/meter)	MEASUREMENT DISTANCE (meters)
0.009 ~ 0.490	2400/F(kHz)	300
0.490 ~ 1.705	24000/F(kHz)	30
1.705 ~ 30.0	30	30
30 ~ 88	100	3
88 ~ 216	150	3
216 ~ 960	200	3
Above 960	500	3

NOTE:

1. The lower limit shall apply at the transition frequencies.
2. Emission level (dBuV/m) = 20 log Emission level (uV/m).
3. For frequencies above 1000MHz, the field strength limits are based on average detector, however, the peak field strength of any emission shall not exceed the maximum permitted average limits, specified above by more than 20dB under any condition of modulation.

3.1.2 LIMITS OF UNWANTED EMISSION

	APPLICABLE TO	LIMIT	
RESTRICTED BANDS	789033 D02 General UNII Test Procedures New Rules v02r01	FIELD STRENGTH AT 3m (dBμV/m)	
		PK : 74	AV : 54
OUT OF THE RESTRICTED BANDS	APPLICABLE TO	EIRP LIMIT (dBm/MHz)	EQUIVALENT FIELD STRENGTH AT 3m (dBμV/m)
	15.407(b)(1)	PK : -27	PK : 68.2
	15.407(b)(2)		
	15.407(b)(3)		
	15.407(b)(4)	See note 2 (FCC 16-24)	

NOTE: The following formula is used to convert the equipment isotropic radiated power (eirp) to field strength:

$$E = \frac{1000000\sqrt{30P}}{3}$$ μV/m, where P is the eirp (Watts).

2. All emissions shall be limited to a level of -27 dBm/MHz at 75 MHz or more above or below the band edge increasing linearly to 10 dBm/MHz at 25 MHz above or below the band edge, and from 25 MHz above or below the band edge increasing linearly to a level of 15.6 dBm/MHz at 5 MHz above or below the band edge, and from 5 MHz above or below the band edge increasing linearly to a level of 27 dBm/MHz at the band edge.

3.1.3 TEST INSTRUMENTS

Equipment	Manufacturer	Model No.	Serial No.	Last Cal.	Next Cal.
3m Semi-anechoic Chamber	ETS-LINDGREN	9m*6m*6m	Euroshieldpn-CT0001143-1216	May. 19,20	May. 18,23
Bilog Antenna	ETS-LINDGREN	3143B	00161965	Mar. 05,21	Mar. 04,22
Bilog Antenna	ETS-LINDGREN	3143B	00161965	Mar. 04,22	Mar. 03,23
Horn Antenna	ETS-LINDGREN	3117	00168728	Apr. 02, 21	Apr. 01, 22
Horn Antenna	ETS-LINDGREN	3117	00168728	Apr. 01, 22	Mar. 31, 23
Horn Antenna (18GHz-40GHz)	N/A	QWH-SL-18-40-K-SG/QMS-00361	15433	Aug. 25, 21	Aug. 24, 22
Horn Antenna (18GHz-40GHz)	N/A	QWH-SL-18-40-K-SG/QMS-00361	15433	Aug. 24, 22	Aug. 23, 23
Test Software	E3	V 9.160323	N/A	N/A	N/A
Test Software	ADT	ADT_Radiated_V7.6.15.9.2	N/A	N/A	N/A
10dB Attenuator	JFW/USA	50HF-010-SMA	1505	Jun. 03,21	Jun. 02,22
10dB Attenuator	JFW/USA	50HF-010-SMA	1505	Jun. 02,22	Jun. 01,23
MXE EMI Receiver	KEYSIGHT	N9038A-544	MY54450026	Apr. 27,21	Apr. 26,22
MXE EMI Receiver	KEYSIGHT	N9038A-544	MY54450026	Apr. 26,22	Apr. 25,23
Signal Pre-Amplifier	EMSI	EMC 9135	980249	Jun. 02,21	Jun. 01,22
Signal Pre-Amplifier	EMSI	EMC 9135	980249	Jun. 01,22	May. 31,23
Signal Pre-Amplifier	EMSI	EMC 012645B	980257	Jun. 02,21	Jun. 01,22
Signal Pre-Amplifier	EMSI	EMC 012645B	980257	Jun. 01,22	May. 31,23
Signal Pre-Amplifier	EMSI	EMC 184045B	980259	Apr. 30,21	Apr. 29,22
Signal Pre-Amplifier	EMSI	EMC 184045B	980259	Apr. 29,22	Apr. 28,23
DC Source	Kikusui/JP	PMX18-5A	0000001	Aug. 25,21	Aug. 24,22
DC Source	Kikusui/JP	PMX18-5A	0000001	Aug. 24,22	Aug. 23,23
Power Meter	Anritsu	ML2495A	1506002	Feb. 25,21	Feb. 24,22
Power Meter	Anritsu	ML2495A	1506002	Feb. 24,22	Feb. 23,23
Power Sensor	Anritsu	MA2411B	1339352	Feb. 25,21	Feb. 24,22
Power Sensor	Anritsu	MA2411B	1339352	Feb. 24,22	Feb. 23,23
Loop Antenna	Schwarzbeck	FMZB 1519B	1519B-051	Feb 14,20	Feb. 13,23

NOTE: 1. The calibration interval of the above test instruments is 12 months or 36 months and the calibrations are traceable to CEPREI/CHINA, GRGT/CHINA and NIM/CHINA.

2. The test was performed in 3m Chamber.

3. The FCC Site Registration No. is 525120; The Designation No. is CN1171.

3.1.4 TEST PROCEDURES

a. The EUT was placed on the top of a rotating table 0.8 meters (for below 1GHz) / 1.5 meters (for above 1GHz) above the ground at 3 meter chamber room for test. The table was rotated 360 degrees to determine the position of the highest radiation.

b. The EUT was set 3 meters away from the interference-receiving antenna, which was mounted on the top of a variable-height antenna tower.

c. The antenna is a broadband antenna, and its height is varied from one meter to four meters above the ground to determine the maximum value of the field strength. Both horizontal and vertical polarizations of the antenna are set to make the measurement.

d. For each suspected emission, the EUT was arranged to its worst case and then the antenna was tuned to heights from 1 meter to 4 meters and the rotatable table was turned from 0 degrees to 360 degrees to find the maximum reading.

e. The test-receiver system was set to Peak Detect Function and Specified Bandwidth with Maximum Hold Mode.

f. If the emission level of the EUT in peak mode was 10dB lower than the limit specified, then testing could be stopped and the peak values of the EUT would be reported. Otherwise the emissions that did not have 10dB margin would be re-tested one by one using peak, quasi-peak or average method as specified and then reported in a data sheet.

NOTE:

1. The resolution bandwidth and video bandwidth of test receiver/spectrum analyzer is 120kHz for Peak detection (PK) and Quasi-peak detection (QP) at frequency below 1GHz.
2. The resolution bandwidth of test receiver/spectrum analyzer is 1MHz and video bandwidth is 3MHz for Peak detection at frequency above 1GHz.
3. The resolution bandwidth of test receiver/spectrum analyzer is 1MHz and the video bandwidth is 3MHz for RMS Average (Duty cycle < 98%) for Average detection (AV) at frequency above 1GHz, then the measurement results was added to a correction factor (10 log(1/duty cycle)).
4. The resolution bandwidth of test receiver/spectrum analyzer is 1MHz and the video bandwidth is 10Hz (Duty cycle ≥ 98%) for Average detection (AV) at frequency above 1GHz.
5. All modes of operation were investigated and the worst-case emissions are reported.

3.1.5 DEVIATION FROM TEST STANDARD

No deviation.

3.1.6 TEST SETUP

<Frequency Range 9KHz~30MHz >

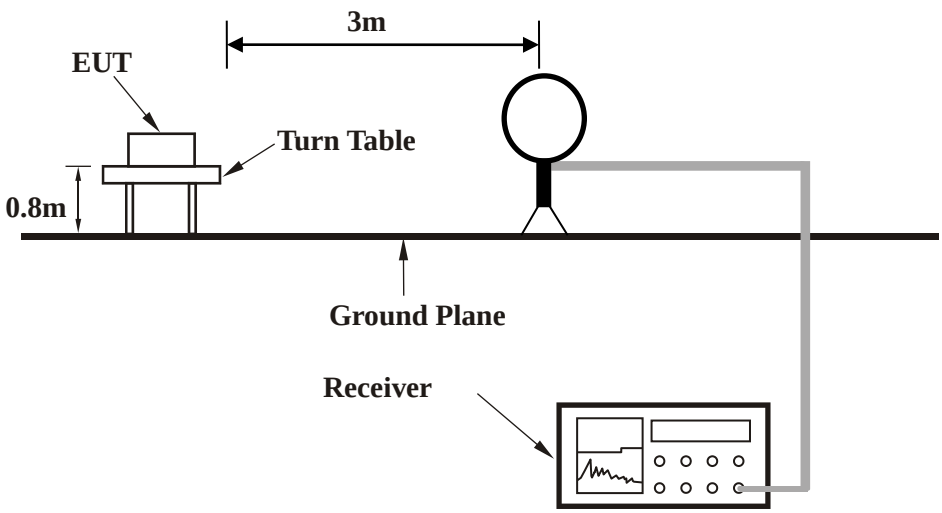

< Frequency Range 30MHz~1GHz >

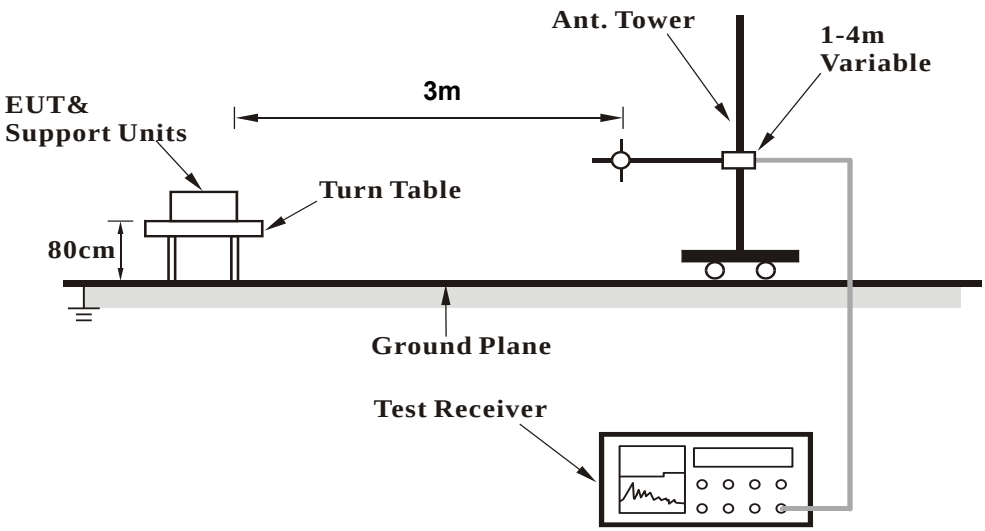

<Frequency Range above 1GHz>

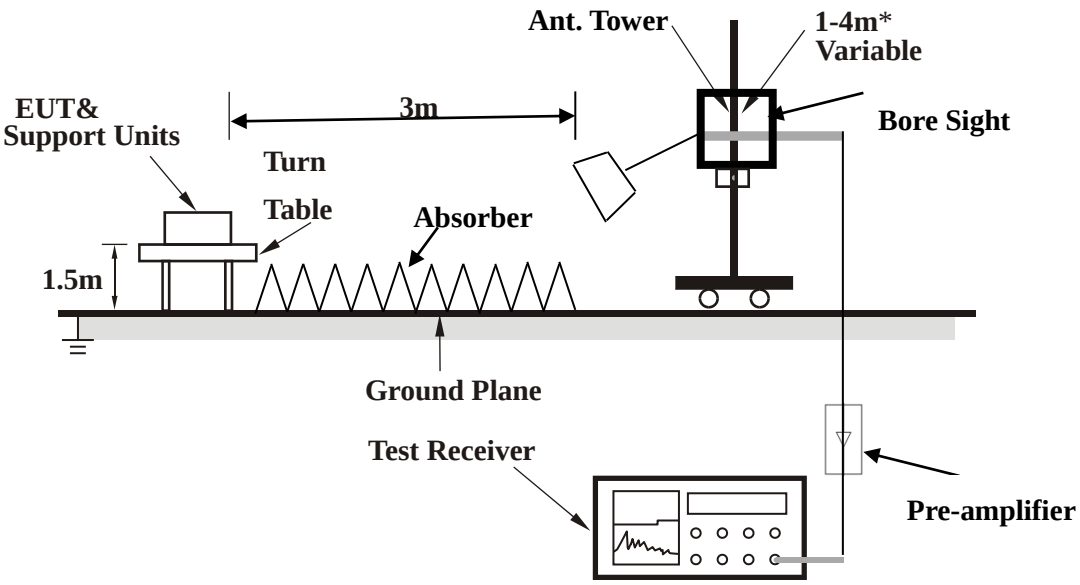

Note: Above 1G is a directional antenna

Depends on the EUT height and the antenna 3dB beamwidth both, refer to section 7.3 of CISPR 16-2-3.

For the actual test configuration, please refer to the attached file (Test Setup Photo).

3.1.7 EUT OPERATING CONDITION

a. Set the EUT under full load condition and placed them on a testing table.

b. Set the transmitter part of EUT under transmission condition continuously at specific channel frequency.

c. The necessary accessories enable the EUT in full functions.

3.1.8 TEST RESULTS

BELOW 1GHz WORST-CASE DATA:

Note: For frequency below 30MHz, the emission was tested 20db below the limit so the data not recorded in the sheet.

30 MHz – 1GHz data:

Band 3

802.11n (40MHz)

CHANNEL	TX Channel 102	**DETECTOR FUNCTION**	Quasi-Peak (QP)
FREQUENCY RANGE	30MHz ~ 1GHz		

ANTENNA POLARITY & TEST DISTANCE: HORIZONTAL AT 3 M										
FREQ. (MHz)	EMISSION LEVEL (dBuV/m)	READ LEVEL (dBuV)	LIMIT (dBuV/m)	MARGIN (dB)	ANTENNA FACTOR (dB /m)	CABLE LOSS (dB)	PREAMP FACTOR (dB)	ANTENNA HEIGHT (cm)	TABLE ANGLE (Degree)	REMARK
56.19	27.34	54.29	40	-12.66	9.58	0.43	36.96	174	33	QP
93.05	15.15	42.13	43.5	-28.35	9.39	0.52	36.89	153	360	QP
211.39	20.4	44.13	43.5	-23.1	11.8	0.76	36.29	122	27	QP
313.24	20.36	41.42	46	-25.64	14.29	0.93	36.28	130	321	QP
422.85	25.04	43.77	46	-20.96	16.63	1.11	36.47	100	349	QP
648.86	22.15	37.13	46	-23.85	20.63	1.42	37.03	162	354	QP

REMARKS:

1. Emission level (dBuV/m) = Read level (dBuV) + Correction Factor (dB/m).
2. Correction Factor (dB/m) = Antenna Factor (dB/m) + Cable Factor (dB).
3. The other emission levels were very low against the limit.
4. Margin value = Emission level – Limit value.

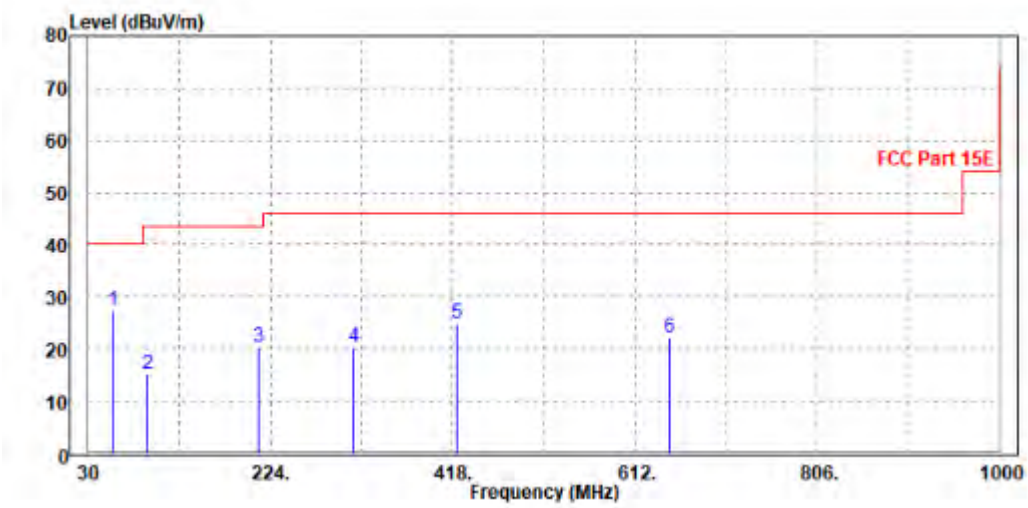

CHANNEL	Channel 102	DETECTOR FUNCTION	Quasi-Peak (QP)
FREQUENCY RANGE	30MHz ~ 1GHz		

ANTENNA POLARITY & TEST DISTANCE: VERTICAL AT 3 M										
FREQ. (MHz)	EMISSION LEVEL (dBuV/m)	READ LEVEL (dBuV)	LIMIT (dBuV/m)	MARGIN (dB)	ANTENNA FACTOR (dB /m)	CABLE LOSS (dB)	PREAMP FACTOR (dB)	ANTENNA HEIGHT (cm)	TABLE ANGLE (Degree)	REMARK
34.85	29.22	48.36	40	-10.78	17.88	0.33	37.35	116	247	QP
54.25	27.47	54.79	40	-12.53	9.23	0.42	36.97	146	100	QP
78.5	18.88	47.69	40	-21.12	7.68	0.49	36.98	106	77	QP
180.35	17.65	42.13	43.5	-25.85	11.21	0.71	36.4	186	284	QP
258.92	14.83	37.4	46	-31.17	12.85	0.85	36.27	187	52	QP
486.87	19.54	37.5	46	-26.46	17.43	1.2	36.59	122	154	QP

REMARKS:

1. Emission level (dBuV/m) = Read level (dBuV) + Correction Factor (dB/m).
2. Correction Factor (dB/m) = Antenna Factor (dB/m) + Cable Factor (dB).
3. The other emission levels were very low against the limit.
4. Margin value = Emission level – Limit value.

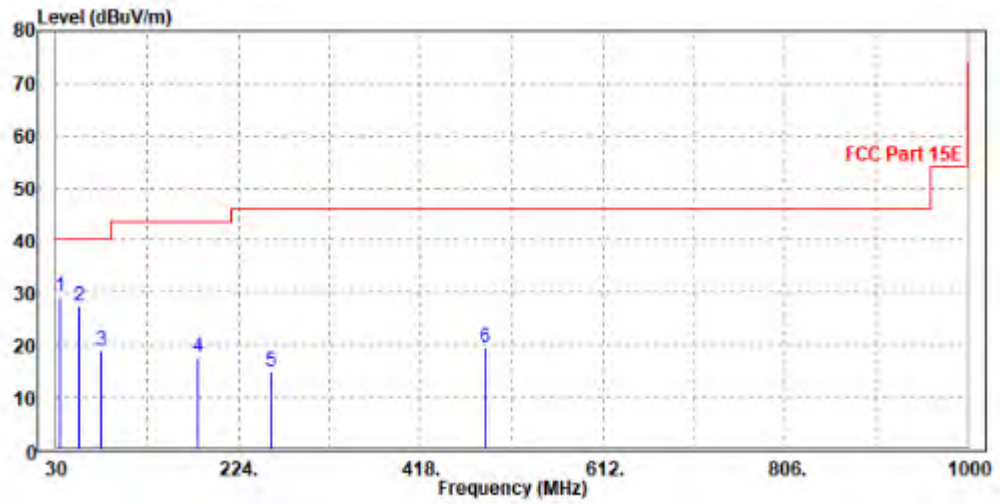

ABOVE 1GHz WORST-CASE DATA:

Note: For higher frequency, the emission is too low to be detected.

Band 1

802.11a

CHANNEL	TX Channel 36	**DETECTOR FUNCTION**	Peak (PK) Average (AV)
FREQUENCY RANGE	1GHz ~ 40GHz		

ANTENNA POLARITY & TEST DISTANCE: HORIZONTAL AT 3 M										
FREQ. (MHz)	EMISSION LEVEL (dBuV/m)	READ LEVEL (dBuV)	LIMIT (dBuV/m)	MARGIN (dB)	ANTENNA FACTOR (dB /m)	CABLE LOSS (dB)	PREAMP FACTOR (dB)	ANTENNA HEIGHT (cm)	TABLE ANGLE (Degree)	REMARK
5150	54.06	56.37	74	-19.94	34.52	9.52	46.35	100	360	Peak
5150	48.67	50.98	54	-5.33	34.52	9.52	46.35	100	360	Average
5180	99.59	101.82	/	/	34.54	9.58	46.35	100	360	Peak
5180	92.21	94.44	/	/	34.54	9.58	46.35	100	360	Average
5350	53.99	55.67	74	-20.01	34.68	9.94	46.3	100	360	Peak
5350	47.12	48.8	54	-6.88	34.68	9.94	46.3	100	360	Average
ANTENNA POLARITY & TEST DISTANCE: VERTICAL AT 3 M										
FREQ. (MHz)	EMISSION LEVEL (dBuV/m)	READ LEVEL (dBuV)	LIMIT (dBuV/m)	MARGIN (dB)	ANTENNA FACTOR (dB /m)	CABLE LOSS (dB)	PREAMP FACTOR (dB)	ANTENNA HEIGHT (cm)	TABLE ANGLE (Degree)	REMARK
5150	55	57.23	74	-19	34.6	9.52	46.35	100	180	Peak
5150	49.18	51.41	54	-4.82	34.6	9.52	46.35	100	180	Average
5180	100.75	102.92	/	/	34.6	9.58	46.35	100	180	Peak
5180	93.15	95.32	/	/	34.6	9.58	46.35	100	180	Average
5350	53.26	55.02	74	-20.74	34.6	9.94	46.3	100	180	Peak
5350	46.98	48.74	54	-7.02	34.6	9.94	46.3	100	180	Average

REMARKS:

1. Emission Level = Read Level+ Antenna Factor + Cable Loss- Preamp Factor
   Margin value = Emission level – Limit value.
2. 5180MHz: Fundamental frequency.

CHANNEL	TX Channel 40	DETECTOR FUNCTION	Peak (PK) Average (AV)
FREQUENCY RANGE	1GHz ~ 40GHz		

ANTENNA POLARITY & TEST DISTANCE: HORIZONTAL AT 3 M										
FREQ. (MHz)	EMISSION LEVEL (dBuV/m)	READ LEVEL (dBuV)	LIMIT (dBuV/m)	MARGIN (dB)	ANTENNA FACTOR (dB /m)	CABLE LOSS (dB)	PREAMP FACTOR (dB)	ANTENNA HEIGHT (cm)	TABLE ANGLE (Degree)	REMARK
5150	54.32	56.63	74	-19.68	34.52	9.52	46.35	100	0	Peak
5150	47.05	49.36	54	-6.95	34.52	9.52	46.35	100	0	Average
5200	100	102.16	/	/	34.56	9.62	46.34	100	0	Peak
5200	92.57	94.73	/	/	34.56	9.62	46.34	100	0	Average
5350	53.05	54.73	74	-20.95	34.68	9.94	46.3	100	0	Peak
5350	46.96	48.64	54	-7.04	34.68	9.94	46.3	100	0	Average
ANTENNA POLARITY & TEST DISTANCE: VERTICAL AT 3 M										
FREQ. (MHz)	EMISSION LEVEL (dBuV/m)	READ LEVEL (dBuV)	LIMIT (dBuV/m)	MARGIN (dB)	ANTENNA FACTOR (dB /m)	CABLE LOSS (dB)	PREAMP FACTOR (dB)	ANTENNA HEIGHT (cm)	TABLE ANGLE (Degree)	REMARK
5150	54.51	56.74	74	-19.49	34.6	9.52	46.35	100	185	Peak
5150	47.16	49.39	54	-6.84	34.6	9.52	46.35	100	185	Average
5200	100.32	102.44	/	/	34.6	9.62	46.34	100	185	Peak
5200	92.93	95.05	/	/	34.6	9.62	46.34	100	185	Average
5350	53.08	54.84	74	-20.92	34.6	9.94	46.3	100	185	Peak
5350	46.37	48.13	54	-7.63	34.6	9.94	46.3	100	185	Average

REMARKS:

1. Emission Level = Read Level+ Antenna Factor + Cable Loss- Preamp Factor
   Margin value = Emission level – Limit value.
2. 5200MHz: Fundamental frequency.

CHANNEL	TX Channel 48	DETECTOR FUNCTION	Peak (PK) Average (AV)
FREQUENCY RANGE	1GHz ~ 40GHz		

ANTENNA POLARITY & TEST DISTANCE: HORIZONTAL AT 3 M										
FREQ. (MHz)	EMISSION LEVEL (dBuV/m)	READ LEVEL (dBuV)	LIMIT (dBuV/m)	MARGIN (dB)	ANTENNA FACTOR (dB /m)	CABLE LOSS (dB)	PREAMP FACTOR (dB)	ANTENNA HEIGHT (cm)	TABLE ANGLE (Degree)	REMARK
5150	52.55	54.86	74	-21.45	34.52	9.52	46.35	100	355	Peak
5150	47.5	49.81	54	-6.5	34.52	9.52	46.35	100	355	Average
5240	99.46	101.49	/	/	34.59	9.71	46.33	100	355	Peak
5240	92.69	94.72	/	/	34.59	9.71	46.33	100	355	Average
5350	54.34	56.02	74	-19.66	34.68	9.94	46.3	100	355	Peak
5350	46.47	48.15	54	-7.53	34.68	9.94	46.3	100	355	Average
ANTENNA POLARITY & TEST DISTANCE: VERTICAL AT 3 M										
FREQ. (MHz)	EMISSION LEVEL (dBuV/m)	READ LEVEL (dBuV)	LIMIT (dBuV/m)	MARGIN (dB)	ANTENNA FACTOR (dB /m)	CABLE LOSS (dB)	PREAMP FACTOR (dB)	ANTENNA HEIGHT (cm)	TABLE ANGLE (Degree)	REMARK
5150	53.85	56.08	74	-20.15	34.6	9.52	46.35	100	185	Peak
5150	46.74	48.97	54	-7.26	34.6	9.52	46.35	100	185	Average
5240	100.53	102.55	/	/	34.6	9.71	46.33	100	185	Peak
5240	93.1	95.12	/	/	34.6	9.71	46.33	100	185	Average
5350	53.07	54.83	74	-20.93	34.6	9.94	46.3	100	185	Peak
5350	47.06	48.82	54	-6.94	34.6	9.94	46.3	100	185	Average

REMARKS:

1. Emission Level = Read Level+ Antenna Factor + Cable Loss- Preamp Factor
   Margin value = Emission level – Limit value.
2. 5240MHz: Fundamental frequency.

802.11n (20MHz)

CHANNEL	TX Channel 36	DETECTOR FUNCTION	Peak (PK)
FREQUENCY RANGE	1GHz ~ 40GHz		Average (AV)

ANTENNA POLARITY & TEST DISTANCE: HORIZONTAL AT 3 M										
FREQ. (MHz)	EMISSION LEVEL (dBuV/m)	READ LEVEL (dBuV)	LIMIT (dBuV/m)	MARGIN (dB)	ANTENNA FACTOR (dB /m)	CABLE LOSS (dB)	PREAMP FACTOR (dB)	ANTENNA HEIGHT (cm)	TABLE ANGLE (Degree)	REMARK
5150	57.72	60.03	74	-16.28	34.52	9.52	46.35	100	355	Peak
5150	49.23	51.54	54	-4.77	34.52	9.52	46.35	100	355	Average
5180	100.95	103.18	/	/	34.54	9.58	46.35	100	355	Peak
5180	92.75	94.98	/	/	34.54	9.58	46.35	100	355	Average
5350	53.78	55.46	74	-20.22	34.68	9.94	46.3	100	355	Peak
5350	46.81	48.49	54	-7.19	34.68	9.94	46.3	100	355	Average
ANTENNA POLARITY & TEST DISTANCE: VERTICAL AT 3 M										
FREQ. (MHz)	EMISSION LEVEL (dBuV/m)	READ LEVEL (dBuV)	LIMIT (dBuV/m)	MARGIN (dB)	ANTENNA FACTOR (dB /m)	CABLE LOSS (dB)	PREAMP FACTOR (dB)	ANTENNA HEIGHT (cm)	TABLE ANGLE (Degree)	REMARK
5150	58.36	60.59	74	-15.64	34.6	9.52	46.35	100	188	Peak
5150	49.45	51.68	54	-4.55	34.6	9.52	46.35	100	188	Average
5180	101.18	103.35	/	/	34.6	9.58	46.35	100	188	Peak
5180	92.64	94.81	/	/	34.6	9.58	46.35	100	188	Average
5350	53.67	55.43	74	-20.33	34.6	9.94	46.3	100	188	Peak
5350	47.01	48.77	54	-6.99	34.6	9.94	46.3	100	188	Average

REMARKS:

1. Emission Level = Read Level+ Antenna Factor + Cable Loss- Preamp Factor
   Margin value = Emission level – Limit value.
2. 5180MHz: Fundamental frequency.

CHANNEL	TX Channel 40	DETECTOR FUNCTION	Peak (PK) Average (AV)
FREQUENCY RANGE	1GHz ~ 40GHz		

ANTENNA POLARITY & TEST DISTANCE: HORIZONTAL AT 3 M										
FREQ. (MHz)	EMISSION LEVEL (dBuV/m)	READ LEVEL (dBuV)	LIMIT (dBuV/m)	MARGIN (dB)	ANTENNA FACTOR (dB /m)	CABLE LOSS (dB)	PREAMP FACTOR (dB)	ANTENNA HEIGHT (cm)	TABLE ANGLE (Degree)	REMARK
5150	55.54	57.85	74	-18.46	34.52	9.52	46.35	100	355	Peak
5150	46.78	49.09	54	-7.22	34.52	9.52	46.35	100	355	Average
5200	100.71	102.87	/	/	34.56	9.62	46.34	100	355	Peak
5200	92.78	94.94	/	/	34.56	9.62	46.34	100	355	Average
5350	52.87	54.55	74	-21.13	34.68	9.94	46.3	100	355	Peak
5350	47.42	49.1	54	-6.58	34.68	9.94	46.3	100	355	Average
ANTENNA POLARITY & TEST DISTANCE: VERTICAL AT 3 M										
FREQ. (MHz)	EMISSION LEVEL (dBuV/m)	READ LEVEL (dBuV)	LIMIT (dBuV/m)	MARGIN (dB)	ANTENNA FACTOR (dB /m)	CABLE LOSS (dB)	PREAMP FACTOR (dB)	ANTENNA HEIGHT (cm)	TABLE ANGLE (Degree)	REMARK
5150	53.86	56.09	74	-20.14	34.6	9.52	46.35	100	188	Peak
5150	47.09	49.32	54	-6.91	34.6	9.52	46.35	100	188	Average
5200	101.7	103.82	/	/	34.6	9.62	46.34	100	188	Peak
5200	93.13	95.25	/	/	34.6	9.62	46.34	100	188	Average
5350	53.09	54.85	74	-20.91	34.6	9.94	46.3	100	188	Peak
5350	46.64	48.4	54	-7.36	34.6	9.94	46.3	100	188	Average

REMARKS:

1. Emission Level = Read Level+ Antenna Factor + Cable Loss- Preamp Factor
   Margin value = Emission level – Limit value.
2. 5200MHz: Fundamental frequency.

CHANNEL	TX Channel 48	DETECTOR FUNCTION	Peak (PK)
FREQUENCY RANGE	1GHz ~ 40GHz		Average (AV)

ANTENNA POLARITY & TEST DISTANCE: HORIZONTAL AT 3 M										
FREQ. (MHz)	EMISSION LEVEL (dBuV/m)	READ LEVEL (dBuV)	LIMIT (dBuV/m)	MARGIN (dB)	ANTENNA FACTOR (dB /m)	CABLE LOSS (dB)	PREAMP FACTOR (dB)	ANTENNA HEIGHT (cm)	TABLE ANGLE (Degree)	REMARK
5150	55	57.31	74	-19	34.52	9.52	46.35	100	355	Peak
5150	46.74	49.05	54	-7.26	34.52	9.52	46.35	100	355	Average
5240	100.78	102.81	/	/	34.59	9.71	46.33	100	355	Peak
5240	92.78	94.81	/	/	34.59	9.71	46.33	100	355	Average
5350	53.84	55.52	74	-20.16	34.68	9.94	46.3	100	355	Peak
5350	46.73	48.41	54	-7.27	34.68	9.94	46.3	100	355	Average
ANTENNA POLARITY & TEST DISTANCE: VERTICAL AT 3 M										
FREQ. (MHz)	EMISSION LEVEL (dBuV/m)	READ LEVEL (dBuV)	LIMIT (dBuV/m)	MARGIN (dB)	ANTENNA FACTOR (dB /m)	CABLE LOSS (dB)	PREAMP FACTOR (dB)	ANTENNA HEIGHT (cm)	TABLE ANGLE (Degree)	REMARK
5150	55.77	58	74	-18.23	34.6	9.52	46.35	100	188	Peak
5150	47.1	49.33	54	-6.9	34.6	9.52	46.35	100	188	Average
5240	101.09	103.11	/	/	34.6	9.71	46.33	100	188	Peak
5240	92.49	94.51	/	/	34.6	9.71	46.33	100	188	Average
5350	52.91	54.67	74	-21.09	34.6	9.94	46.3	100	188	Peak
5350	46.49	48.25	54	-7.51	34.6	9.94	46.3	100	188	Average

REMARKS:

1. Emission Level = Read Level+ Antenna Factor + Cable Loss- Preamp Factor
   Margin value = Emission level – Limit value.
2. 5240MHz: Fundamental frequency.

802.11n (40MHz)

CHANNEL	TX Channel 38	**DETECTOR FUNCTION**	Peak (PK) Average (AV)
FREQUENCY RANGE	1GHz ~ 40GHz		

ANTENNA POLARITY & TEST DISTANCE: HORIZONTAL AT 3 M										
FREQ. (MHz)	EMISSION LEVEL (dBuV/m)	READ LEVEL (dBuV)	LIMIT (dBuV/m)	MARGIN (dB)	ANTENNA FACTOR (dB /m)	CABLE LOSS (dB)	PREAMP FACTOR (dB)	ANTENNA HEIGHT (cm)	TABLE ANGLE (Degree)	REMARK
5150	61.94	64.25	74	-12.06	34.52	9.52	46.35	105	0	Peak
5150	53.22	55.53	54	-0.78	34.52	9.52	46.35	105	0	Average
5190	99.98	102.17	/	/	34.55	9.6	46.34	105	0	Peak
5190	89.73	91.92	/	/	34.55	9.6	46.34	105	0	Average
5350	53.51	55.19	74	-20.49	34.68	9.94	46.3	105	0	Peak
5350	47.83	49.51	54	-6.17	34.68	9.94	46.3	105	0	Average
ANTENNA POLARITY & TEST DISTANCE: VERTICAL AT 3 M										
FREQ. (MHz)	EMISSION LEVEL (dBuV/m)	READ LEVEL (dBuV)	LIMIT (dBuV/m)	MARGIN (dB)	ANTENNA FACTOR (dB /m)	CABLE LOSS (dB)	PREAMP FACTOR (dB)	ANTENNA HEIGHT (cm)	TABLE ANGLE (Degree)	REMARK
5150	59.01	61.32	74	-14.99	34.52	9.52	46.35	100	250	Peak
5150	53.13	55.44	54	-0.87	34.52	9.52	46.35	100	250	Average
5190	95.8	97.99	/	/	34.55	9.6	46.34	100	250	Peak
5190	88.38	90.57	/	/	34.55	9.6	46.34	100	250	Average
5350	53.76	55.44	74	-20.24	34.68	9.94	46.3	100	250	Peak
5350	47.95	49.63	54	-6.05	34.68	9.94	46.3	100	250	Average

REMARKS:

1. Emission Level = Read Level+ Antenna Factor + Cable Loss- Preamp Factor
   Margin value = Emission level – Limit value.
2. 5190MHz: Fundamental frequency.

CHANNEL	TX Channel 46	DETECTOR FUNCTION	Peak (PK)
FREQUENCY RANGE	1GHz ~ 40GHz		Average (AV)

ANTENNA POLARITY & TEST DISTANCE: HORIZONTAL AT 3 M										
FREQ. (MHz)	EMISSION LEVEL (dBuV/m)	READ LEVEL (dBuV)	LIMIT (dBuV/m)	MARGIN (dB)	ANTENNA FACTOR (dB /m)	CABLE LOSS (dB)	PREAMP FACTOR (dB)	ANTENNA HEIGHT (cm)	TABLE ANGLE (Degree)	REMARK
5150	53.42	55.73	74	-20.58	34.52	9.52	46.35	100	355	Peak
5150	47.21	49.52	54	-6.79	34.52	9.52	46.35	100	355	Average
5230	97.84	99.9	/	/	34.58	9.69	46.33	100	355	Peak
5230	91.58	93.64	/	/	34.58	9.69	46.33	100	355	Average
5350	51.35	53.03	74	-22.65	34.68	9.94	46.3	100	355	Peak
5350	47.27	48.95	54	-6.73	34.68	9.94	46.3	100	355	Average
ANTENNA POLARITY & TEST DISTANCE: VERTICAL AT 3 M										
FREQ. (MHz)	EMISSION LEVEL (dBuV/m)	READ LEVEL (dBuV)	LIMIT (dBuV/m)	MARGIN (dB)	ANTENNA FACTOR (dB /m)	CABLE LOSS (dB)	PREAMP FACTOR (dB)	ANTENNA HEIGHT (cm)	TABLE ANGLE (Degree)	REMARK
5150	53.46	55.69	74	-20.54	34.6	9.52	46.35	100	188	Peak
5150	47.28	49.51	54	-6.72	34.6	9.52	46.35	100	188	Average
5230	96.91	98.95	/	/	34.6	9.69	46.33	100	188	Peak
5230	91.54	93.58	/	/	34.6	9.69	46.33	100	188	Average
5350	51.52	53.28	74	-22.48	34.6	9.94	46.3	100	188	Peak
5350	47.47	49.23	54	-6.53	34.6	9.94	46.3	100	188	Average

REMARKS:

1. Emission Level = Read Level+ Antenna Factor + Cable Loss- Preamp Factor
   Margin value = Emission level – Limit value.
2. 5230MHz: Fundamental frequency.

802.11ac (20MHz)

CHANNEL	TX Channel 36	DETECTOR FUNCTION	Peak (PK)
FREQUENCY RANGE	1GHz ~ 40GHz		Average (AV)

ANTENNA POLARITY & TEST DISTANCE: HORIZONTAL AT 3 M										
FREQ. (MHz)	EMISSION LEVEL (dBuV/m)	READ LEVEL (dBuV)	LIMIT (dBuV/m)	MARGIN (dB)	ANTENNA FACTOR (dB /m)	CABLE LOSS (dB)	PREAMP FACTOR (dB)	ANTENNA HEIGHT (cm)	TABLE ANGLE (Degree)	REMARK
5150	57.35	59.66	74	-16.65	34.52	9.52	46.35	100	355	Peak
5150	49.88	52.19	54	-4.12	34.52	9.52	46.35	100	355	Average
5180	102.15	104.38	/	/	34.54	9.58	46.35	100	355	Peak
5180	94.1	96.33	/	/	34.54	9.58	46.35	100	355	Average
5350	53.01	54.69	74	-20.99	34.68	9.94	46.3	100	355	Peak
5350	46.82	48.5	54	-7.18	34.68	9.94	46.3	100	355	Average
ANTENNA POLARITY & TEST DISTANCE: VERTICAL AT 3 M										
FREQ. (MHz)	EMISSION LEVEL (dBuV/m)	READ LEVEL (dBuV)	LIMIT (dBuV/m)	MARGIN (dB)	ANTENNA FACTOR (dB /m)	CABLE LOSS (dB)	PREAMP FACTOR (dB)	ANTENNA HEIGHT (cm)	TABLE ANGLE (Degree)	REMARK
5150	57.77	60	74	-16.23	34.6	9.52	46.35	100	188	Peak
5150	49.95	52.18	54	-4.05	34.6	9.52	46.35	100	188	Average
5180	101.85	104.02	/	/	34.6	9.58	46.35	100	188	Peak
5180	93.16	95.33	/	/	34.6	9.58	46.35	100	188	Average
5350	53.67	55.43	74	-20.33	34.6	9.94	46.3	100	188	Peak
5350	46.98	48.74	54	-7.02	34.6	9.94	46.3	100	188	Average

REMARKS:

1. Emission Level = Read Level+ Antenna Factor + Cable Loss- Preamp Factor
   Margin value = Emission level – Limit value.
2. 5180MHz: Fundamental frequency.

CHANNEL	TX Channel 40	DETECTOR FUNCTION	Peak (PK) Average (AV)
FREQUENCY RANGE	1GHz ~ 40GHz		

ANTENNA POLARITY & TEST DISTANCE: HORIZONTAL AT 3 M										
FREQ. (MHz)	EMISSION LEVEL (dBuV/m)	READ LEVEL (dBuV)	LIMIT (dBuV/m)	MARGIN (dB)	ANTENNA FACTOR (dB /m)	CABLE LOSS (dB)	PREAMP FACTOR (dB)	ANTENNA HEIGHT (cm)	TABLE ANGLE (Degree)	REMARK
5150	54.35	56.66	74	-19.65	34.52	9.52	46.35	100	355	Peak
5150	47.48	49.79	54	-6.52	34.52	9.52	46.35	100	355	Average
5200	101.92	104.08	/	/	34.56	9.62	46.34	100	355	Peak
5200	93.63	95.79	/	/	34.56	9.62	46.34	100	355	Average
5350	52.86	54.54	74	-21.14	34.68	9.94	46.3	100	355	Peak
5350	46.66	48.34	54	-7.34	34.68	9.94	46.3	100	355	Average
ANTENNA POLARITY & TEST DISTANCE: VERTICAL AT 3 M										
FREQ. (MHz)	EMISSION LEVEL (dBuV/m)	READ LEVEL (dBuV)	LIMIT (dBuV/m)	MARGIN (dB)	ANTENNA FACTOR (dB /m)	CABLE LOSS (dB)	PREAMP FACTOR (dB)	ANTENNA HEIGHT (cm)	TABLE ANGLE (Degree)	REMARK
5150	53.98	56.21	74	-20.02	34.6	9.52	46.35	100	188	Peak
5150	47.31	49.54	54	-6.69	34.6	9.52	46.35	100	188	Average
5200	101.66	103.78	/	/	34.6	9.62	46.34	100	188	Peak
5200	93.45	95.57	/	/	34.6	9.62	46.34	100	188	Average
5350	53.01	54.77	74	-20.99	34.6	9.94	46.3	100	188	Peak
5350	46.48	48.24	54	-7.52	34.6	9.94	46.3	100	188	Average

REMARKS:

1. Emission Level = Read Level+ Antenna Factor + Cable Loss- Preamp Factor
   Margin value = Emission level – Limit value.
2. 5200MHz: Fundamental frequency.

CHANNEL	TX Channel 48	DETECTOR FUNCTION	Peak (PK)
FREQUENCY RANGE	1GHz ~ 40GHz		Average (AV)

ANTENNA POLARITY & TEST DISTANCE: HORIZONTAL AT 3 M										
FREQ. (MHz)	EMISSION LEVEL (dBuV/m)	READ LEVEL (dBuV)	LIMIT (dBuV/m)	MARGIN (dB)	ANTENNA FACTOR (dB /m)	CABLE LOSS (dB)	PREAMP FACTOR (dB)	ANTENNA HEIGHT (cm)	TABLE ANGLE (Degree)	REMARK
5150	53.95	56.26	74	-20.05	34.52	9.52	46.35	100	355	Peak
5150	46.87	49.18	54	-7.13	34.52	9.52	46.35	100	355	Average
5240	101.54	103.57	/	/	34.59	9.71	46.33	100	355	Peak
5240	93.29	95.32	/	/	34.59	9.71	46.33	100	355	Average
5350	54.66	56.34	74	-19.34	34.68	9.94	46.3	100	355	Peak
5350	46.69	48.37	54	-7.31	34.68	9.94	46.3	100	355	Average
ANTENNA POLARITY & TEST DISTANCE: VERTICAL AT 3 M										
FREQ. (MHz)	EMISSION LEVEL (dBuV/m)	READ LEVEL (dBuV)	LIMIT (dBuV/m)	MARGIN (dB)	ANTENNA FACTOR (dB /m)	CABLE LOSS (dB)	PREAMP FACTOR (dB)	ANTENNA HEIGHT (cm)	TABLE ANGLE (Degree)	REMARK
5150	53.44	55.67	74	-20.56	34.6	9.52	46.35	100	175	Peak
5150	46.96	49.19	54	-7.04	34.6	9.52	46.35	100	175	Average
5240	102.13	104.15	/	/	34.6	9.71	46.33	100	175	Peak
5240	94.06	96.08	/	/	34.6	9.71	46.33	100	175	Average
5350	52.77	54.53	74	-21.23	34.6	9.94	46.3	100	175	Peak
5350	46.61	48.37	54	-7.39	34.6	9.94	46.3	100	175	Average

REMARKS:

1. Emission Level = Read Level+ Antenna Factor + Cable Loss- Preamp Factor
   Margin value = Emission level – Limit value.
2. 5240MHz: Fundamental frequency.

802.11ac (40MHz)

CHANNEL	TX Channel 38	DETECTOR FUNCTION	Peak (PK)
FREQUENCY RANGE	1GHz ~ 40GHz		Average (AV)

ANTENNA POLARITY & TEST DISTANCE: HORIZONTAL AT 3 M										
FREQ. (MHz)	EMISSION LEVEL (dBuV/m)	READ LEVEL (dBuV)	LIMIT (dBuV/m)	MARGIN (dB)	ANTENNA FACTOR (dB /m)	CABLE LOSS (dB)	PREAMP FACTOR (dB)	ANTENNA HEIGHT (cm)	TABLE ANGLE (Degree)	REMARK
5150	58.87	61.18	74	-15.13	34.52	9.52	46.35	100	355	Peak
5150	52.01	54.32	54	-1.99	34.52	9.52	46.35	100	355	Average
5190	94.93	97.12	/	/	34.55	9.6	46.34	100	355	Peak
5190	88.31	90.5	/	/	34.55	9.6	46.34	100	355	Average
5350	52.19	53.87	74	-21.81	34.68	9.94	46.3	100	355	Peak
5350	46.72	48.4	54	-7.28	34.68	9.94	46.3	100	355	Average
ANTENNA POLARITY & TEST DISTANCE: VERTICAL AT 3 M										
FREQ. (MHz)	EMISSION LEVEL (dBuV/m)	READ LEVEL (dBuV)	LIMIT (dBuV/m)	MARGIN (dB)	ANTENNA FACTOR (dB /m)	CABLE LOSS (dB)	PREAMP FACTOR (dB)	ANTENNA HEIGHT (cm)	TABLE ANGLE (Degree)	REMARK
5150	57.79	60.02	74	-16.21	34.6	9.52	46.35	100	188	Peak
5150	52.31	54.54	54	-1.69	34.6	9.52	46.35	100	188	Average
5190	95.78	97.92	/	/	34.6	9.6	46.34	100	188	Peak
5190	88.98	91.12	/	/	34.6	9.6	46.34	100	188	Average
5350	53.86	55.62	74	-20.14	34.6	9.94	46.3	100	188	Peak
5350	46.5	48.26	54	-7.5	34.6	9.94	46.3	100	188	Average

REMARKS:

1. Emission Level = Read Level+ Antenna Factor + Cable Loss- Preamp Factor
   Margin value = Emission level – Limit value.
2. 5190MHz: Fundamental frequency.

CHANNEL	TX Channel 46	DETECTOR FUNCTION	Peak (PK) Average (AV)
FREQUENCY RANGE	1GHz ~ 40GHz		

ANTENNA POLARITY & TEST DISTANCE: HORIZONTAL AT 3 M										
FREQ. (MHz)	EMISSION LEVEL (dBuV/m)	READ LEVEL (dBuV)	LIMIT (dBuV/m)	MARGIN (dB)	ANTENNA FACTOR (dB /m)	CABLE LOSS (dB)	PREAMP FACTOR (dB)	ANTENNA HEIGHT (cm)	TABLE ANGLE (Degree)	REMARK
5150	53.25	55.56	74	-20.75	34.52	9.52	46.35	100	355	Peak
5150	46.68	48.99	54	-7.32	34.52	9.52	46.35	100	355	Average
5230	94.09	96.15	/	/	34.58	9.69	46.33	100	355	Peak
5230	87.92	89.98	/	/	34.58	9.69	46.33	100	355	Average
5350	52.79	54.47	74	-21.21	34.68	9.94	46.3	100	355	Peak
5350	47.4	49.08	54	-6.6	34.68	9.94	46.3	100	355	Average
ANTENNA POLARITY & TEST DISTANCE: VERTICAL AT 3 M										
FREQ. (MHz)	EMISSION LEVEL (dBuV/m)	READ LEVEL (dBuV)	LIMIT (dBuV/m)	MARGIN (dB)	ANTENNA FACTOR (dB /m)	CABLE LOSS (dB)	PREAMP FACTOR (dB)	ANTENNA HEIGHT (cm)	TABLE ANGLE (Degree)	REMARK
5150	52.78	55.01	74	-21.22	34.6	9.52	46.35	100	188	Peak
5150	47.07	49.3	54	-6.93	34.6	9.52	46.35	100	188	Average
5230	95.1	97.14	/	/	34.6	9.69	46.33	100	188	Peak
5230	88.55	90.59	/	/	34.6	9.69	46.33	100	188	Average
5350	52.34	54.1	74	-21.66	34.6	9.94	46.3	100	188	Peak
5350	46.61	48.37	54	-7.39	34.6	9.94	46.3	100	188	Average

REMARKS:

1. Emission Level = Read Level+ Antenna Factor + Cable Loss- Preamp Factor
   Margin value = Emission level – Limit value.
2. 5230MHz: Fundamental frequency.

802.11ac (80MHz)

CHANNEL	TX Channel 42	DETECTOR FUNCTION	Peak (PK)
FREQUENCY RANGE	1GHz ~ 40GHz		Average (AV)

ANTENNA POLARITY & TEST DISTANCE: HORIZONTAL AT 3 M										
FREQ. (MHz)	EMISSION LEVEL (dBuV/m)	READ LEVEL (dBuV)	LIMIT (dBuV/m)	MARGIN (dB)	ANTENNA FACTOR (dB /m)	CABLE LOSS (dB)	PREAMP FACTOR (dB)	ANTENNA HEIGHT (cm)	TABLE ANGLE (Degree)	REMARK
5150	56.48	58.79	74	-17.52	34.52	9.52	46.35	100	355	Peak
5150	51.84	54.15	54	-2.16	34.52	9.52	46.35	100	355	Average
5210	91.55	93.68	/	/	34.57	9.64	46.34	100	355	Peak
5210	85.21	87.34	/	/	34.57	9.64	46.34	100	355	Average
5350	52.66	54.34	74	-21.34	34.68	9.94	46.3	100	355	Peak
5350	46.97	48.65	54	-7.03	34.68	9.94	46.3	100	355	Average
ANTENNA POLARITY & TEST DISTANCE: VERTICAL AT 3 M										
FREQ. (MHz)	EMISSION LEVEL (dBuV/m)	READ LEVEL (dBuV)	LIMIT (dBuV/m)	MARGIN (dB)	ANTENNA FACTOR (dB /m)	CABLE LOSS (dB)	PREAMP FACTOR (dB)	ANTENNA HEIGHT (cm)	TABLE ANGLE (Degree)	REMARK
5150	56.9	59.13	74	-17.1	34.6	9.52	46.35	100	188	Peak
5150	51.85	54.08	54	-2.15	34.6	9.52	46.35	100	188	Average
5210	91.44	93.54	/	/	34.6	9.64	46.34	100	188	Peak
5210	85.02	87.12	/	/	34.6	9.64	46.34	100	188	Average
5350	52.12	53.88	74	-21.88	34.6	9.94	46.3	100	188	Peak
5350	47.21	48.97	54	-6.79	34.6	9.94	46.3	100	188	Average

REMARKS:

1. Emission Level = Read Level+ Antenna Factor + Cable Loss- Preamp Factor
   Margin value = Emission level – Limit value.
2. 5210MHz: Fundamental frequency.

Band 2

802.11a

CHANNEL	TX Channel 52	DETECTOR FUNCTION	Peak (PK) Average (AV)
FREQUENCY RANGE	1GHz ~ 40GHz		

ANTENNA POLARITY & TEST DISTANCE: HORIZONTAL AT 3 M										
FREQ. (MHz)	EMISSION LEVEL (dBuV/m)	READ LEVEL (dBuV)	LIMIT (dBuV/m)	MARGIN (dB)	ANTENNA FACTOR (dB /m)	CABLE LOSS (dB)	PREAMP FACTOR (dB)	ANTENNA HEIGHT (cm)	TABLE ANGLE (Degree)	REMARK
5150	53.36	55.67	74	-20.64	34.52	9.52	46.35	100	355	Peak
5150	46.76	49.07	54	-7.24	34.52	9.52	46.35	100	355	Average
5260	100.19	102.15	/	/	34.61	9.75	46.32	100	355	Peak
5260	93.26	95.22	/	/	34.61	9.75	46.32	100	355	Average
5350	53.33	55.01	74	-20.67	34.68	9.94	46.3	100	355	Peak
5350	46.6	48.28	54	-7.4	34.68	9.94	46.3	100	355	Average
ANTENNA POLARITY & TEST DISTANCE: VERTICAL AT 3 M										
FREQ. (MHz)	EMISSION LEVEL (dBuV/m)	READ LEVEL (dBuV)	LIMIT (dBuV/m)	MARGIN (dB)	ANTENNA FACTOR (dB /m)	CABLE LOSS (dB)	PREAMP FACTOR (dB)	ANTENNA HEIGHT (cm)	TABLE ANGLE (Degree)	REMARK
5150	53.24	55.47	74	-20.76	34.6	9.52	46.35	100	188	Peak
5150	47.33	49.56	54	-6.67	34.6	9.52	46.35	100	188	Average
5260	101.48	103.45	/	/	34.6	9.75	46.32	100	188	Peak
5260	94.55	96.52	/	/	34.6	9.75	46.32	100	188	Average
5350	53.42	55.18	74	-20.58	34.6	9.94	46.3	100	188	Peak
5350	47.22	48.98	54	-6.78	34.6	9.94	46.3	100	188	Average

REMARKS:

1. Emission Level = Read Level+ Antenna Factor + Cable Loss- Preamp Factor
   Margin value = Emission level – Limit value.
2. 5260MHz: Fundamental frequency.

CHANNEL	TX Channel 60	DETECTOR FUNCTION	Peak (PK) Average (AV)
FREQUENCY RANGE	1GHz ~ 40GHz		

ANTENNA POLARITY & TEST DISTANCE: HORIZONTAL AT 3 M										
FREQ. (MHz)	EMISSION LEVEL (dBuV/m)	READ LEVEL (dBuV)	LIMIT (dBuV/m)	MARGIN (dB)	ANTENNA FACTOR (dB /m)	CABLE LOSS (dB)	PREAMP FACTOR (dB)	ANTENNA HEIGHT (cm)	TABLE ANGLE (Degree)	REMARK
5150	52.83	55.14	74	-21.17	34.52	9.52	46.35	100	355	Peak
5150	47.91	50.22	54	-6.09	34.52	9.52	46.35	100	355	Average
5300	99.76	101.6	/	/	34.64	9.83	46.31	100	355	Peak
5300	92.37	94.21	/	/	34.64	9.83	46.31	100	355	Average
5350	53.98	55.66	74	-20.02	34.68	9.94	46.3	100	355	Peak
5350	47.01	48.69	54	-6.99	34.68	9.94	46.3	100	355	Average
ANTENNA POLARITY & TEST DISTANCE: VERTICAL AT 3 M										
FREQ. (MHz)	EMISSION LEVEL (dBuV/m)	READ LEVEL (dBuV)	LIMIT (dBuV/m)	MARGIN (dB)	ANTENNA FACTOR (dB /m)	CABLE LOSS (dB)	PREAMP FACTOR (dB)	ANTENNA HEIGHT (cm)	TABLE ANGLE (Degree)	REMARK
5150	55.57	57.8	74	-18.43	34.6	9.52	46.35	100	188	Peak
5150	46.98	49.21	54	-7.02	34.6	9.52	46.35	100	188	Average
5300	102.04	103.92	/	/	34.6	9.83	46.31	100	188	Peak
5300	94.34	96.22	/	/	34.6	9.83	46.31	100	188	Average
5350	54.53	56.29	74	-19.47	34.6	9.94	46.3	100	188	Peak
5350	47.16	48.92	54	-6.84	34.6	9.94	46.3	100	188	Average

REMARKS:

1. Emission Level = Read Level+ Antenna Factor + Cable Loss- Preamp Factor
   Margin value = Emission level – Limit value.
2. 5300MHz: Fundamental frequency.

CHANNEL	TX Channel 64	DETECTOR FUNCTION	Peak (PK) Average (AV)
FREQUENCY RANGE	1GHz ~ 40GHz		

ANTENNA POLARITY & TEST DISTANCE: HORIZONTAL AT 3 M										
FREQ. (MHz)	EMISSION LEVEL (dBuV/m)	READ LEVEL (dBuV)	LIMIT (dBuV/m)	MARGIN (dB)	ANTENNA FACTOR (dB /m)	CABLE LOSS (dB)	PREAMP FACTOR (dB)	ANTENNA HEIGHT (cm)	TABLE ANGLE (Degree)	REMARK
5150	54.4	56.71	74	-19.6	34.52	9.52	46.35	100	345	Peak
5150	46.9	49.21	54	-7.1	34.52	9.52	46.35	100	345	Average
5320	99.32	101.08	/	/	34.66	9.88	46.3	100	345	Peak
5320	92.55	94.31	/	/	34.66	9.88	46.3	100	345	Average
5350	55.08	56.76	74	-18.92	34.68	9.94	46.3	100	345	Peak
5350	48.28	49.96	54	-5.72	34.68	9.94	46.3	100	345	Average
ANTENNA POLARITY & TEST DISTANCE: VERTICAL AT 3 M										
FREQ. (MHz)	EMISSION LEVEL (dBuV/m)	READ LEVEL (dBuV)	LIMIT (dBuV/m)	MARGIN (dB)	ANTENNA FACTOR (dB /m)	CABLE LOSS (dB)	PREAMP FACTOR (dB)	ANTENNA HEIGHT (cm)	TABLE ANGLE (Degree)	REMARK
5150	53.58	55.81	74	-20.42	34.6	9.52	46.35	100	188	Peak
5150	46.69	48.92	54	-7.31	34.6	9.52	46.35	100	188	Average
5320	101.03	102.85	/	/	34.6	9.88	46.3	100	188	Peak
5320	94.42	96.24	/	/	34.6	9.88	46.3	100	188	Average
5350	56.26	58.02	74	-17.74	34.6	9.94	46.3	100	188	Peak
5350	50.21	51.97	54	-3.79	34.6	9.94	46.3	100	188	Average

REMARKS:

1. Emission Level = Read Level+ Antenna Factor + Cable Loss- Preamp Factor
   Margin value = Emission level – Limit value.
2. 5320MHz: Fundamental frequency.

802.11n (20MHz)

CHANNEL	TX Channel 52	DETECTOR FUNCTION	Peak (PK)
FREQUENCY RANGE	1GHz ~ 40GHz		Average (AV)

ANTENNA POLARITY & TEST DISTANCE: HORIZONTAL AT 3 M										
FREQ. (MHz)	EMISSION LEVEL (dBuV/m)	READ LEVEL (dBuV)	LIMIT (dBuV/m)	MARGIN (dB)	ANTENNA FACTOR (dB /m)	CABLE LOSS (dB)	PREAMP FACTOR (dB)	ANTENNA HEIGHT (cm)	TABLE ANGLE (Degree)	REMARK
5150	54.33	56.64	74	-19.67	34.52	9.52	46.35	100	360	Peak
5150	46.94	49.25	54	-7.06	34.52	9.52	46.35	100	360	Average
5260	100.53	102.49	/	/	34.61	9.75	46.32	100	360	Peak
5260	92.37	94.33	/	/	34.61	9.75	46.32	100	360	Average
5350	54.09	55.77	74	-19.91	34.68	9.94	46.3	100	360	Peak
5350	47.26	48.94	54	-6.74	34.68	9.94	46.3	100	360	Average
ANTENNA POLARITY & TEST DISTANCE: VERTICAL AT 3 M										
FREQ. (MHz)	EMISSION LEVEL (dBuV/m)	READ LEVEL (dBuV)	LIMIT (dBuV/m)	MARGIN (dB)	ANTENNA FACTOR (dB /m)	CABLE LOSS (dB)	PREAMP FACTOR (dB)	ANTENNA HEIGHT (cm)	TABLE ANGLE (Degree)	REMARK
5150	54.61	56.84	74	-19.39	34.6	9.52	46.35	100	188	Peak
5150	47.85	50.08	54	-6.15	34.6	9.52	46.35	100	188	Average
5260	100.67	102.64	/	/	34.6	9.75	46.32	100	188	Peak
5260	93.13	95.1	/	/	34.6	9.75	46.32	100	188	Average
5350	54.48	56.24	74	-19.52	34.6	9.94	46.3	100	188	Peak
5350	46.89	48.65	54	-7.11	34.6	9.94	46.3	100	188	Average

REMARKS:

1. Emission Level = Read Level+ Antenna Factor + Cable Loss- Preamp Factor
   Margin value = Emission level – Limit value.
2. 5260MHz: Fundamental frequency.

CHANNEL	TX Channel 60	DETECTOR FUNCTION	Peak (PK)
FREQUENCY RANGE	1GHz ~ 40GHz		Average (AV)

ANTENNA POLARITY & TEST DISTANCE: HORIZONTAL AT 3 M										
FREQ. (MHz)	EMISSION LEVEL (dBuV/m)	READ LEVEL (dBuV)	LIMIT (dBuV/m)	MARGIN (dB)	ANTENNA FACTOR (dB /m)	CABLE LOSS (dB)	PREAMP FACTOR (dB)	ANTENNA HEIGHT (cm)	TABLE ANGLE (Degree)	REMARK
5150	54.09	56.4	74	-19.91	34.52	9.52	46.35	100	12	Peak
5150	46.76	49.07	54	-7.24	34.52	9.52	46.35	100	12	Average
5300	100.83	102.67	/	/	34.64	9.83	46.31	100	12	Peak
5300	92.75	94.59	/	/	34.64	9.83	46.31	100	12	Average
5350	53.88	55.56	74	-20.12	34.68	9.94	46.3	100	12	Peak
5350	46.74	48.42	54	-7.26	34.68	9.94	46.3	100	12	Average
ANTENNA POLARITY & TEST DISTANCE: VERTICAL AT 3 M										
FREQ. (MHz)	EMISSION LEVEL (dBuV/m)	READ LEVEL (dBuV)	LIMIT (dBuV/m)	MARGIN (dB)	ANTENNA FACTOR (dB /m)	CABLE LOSS (dB)	PREAMP FACTOR (dB)	ANTENNA HEIGHT (cm)	TABLE ANGLE (Degree)	REMARK
5150	56.08	58.31	74	-17.92	34.6	9.52	46.35	100	188	Peak
5150	47.61	49.84	54	-6.39	34.6	9.52	46.35	100	188	Average
5300	102.2	104.08	/	/	34.6	9.83	46.31	100	188	Peak
5300	94.13	96.01	/	/	34.6	9.83	46.31	100	188	Average
5350	54.81	56.57	74	-19.19	34.6	9.94	46.3	100	188	Peak
5350	47.6	49.36	54	-6.4	34.6	9.94	46.3	100	188	Average

REMARKS:

1. Emission Level = Read Level+ Antenna Factor + Cable Loss- Preamp Factor
   Margin value = Emission level – Limit value.
2. 5300MHz: Fundamental frequency.

CHANNEL	TX Channel 64	DETECTOR FUNCTION	Peak (PK)
FREQUENCY RANGE	1GHz ~ 40GHz		Average (AV)

ANTENNA POLARITY & TEST DISTANCE: HORIZONTAL AT 3 M										
FREQ. (MHz)	EMISSION LEVEL (dBuV/m)	READ LEVEL (dBuV)	LIMIT (dBuV/m)	MARGIN (dB)	ANTENNA FACTOR (dB /m)	CABLE LOSS (dB)	PREAMP FACTOR (dB)	ANTENNA HEIGHT (cm)	TABLE ANGLE (Degree)	REMARK
5150	53.36	55.67	74	-20.64	34.52	9.52	46.35	200	340	Peak
5150	46.69	49	54	-7.31	34.52	9.52	46.35	200	340	Average
5320	101.08	102.84	/	/	34.66	9.88	46.3	200	340	Peak
5320	92.77	94.53	/	/	34.66	9.88	46.3	200	340	Average
5350	55.37	57.05	74	-18.63	34.68	9.94	46.3	200	340	Peak
5350	48.89	50.57	54	-5.11	34.68	9.94	46.3	200	340	Average
ANTENNA POLARITY & TEST DISTANCE: VERTICAL AT 3 M										
FREQ. (MHz)	EMISSION LEVEL (dBuV/m)	READ LEVEL (dBuV)	LIMIT (dBuV/m)	MARGIN (dB)	ANTENNA FACTOR (dB /m)	CABLE LOSS (dB)	PREAMP FACTOR (dB)	ANTENNA HEIGHT (cm)	TABLE ANGLE (Degree)	REMARK
5150	55.07	57.3	74	-18.93	34.6	9.52	46.35	100	188	Peak
5150	47.12	49.35	54	-6.88	34.6	9.52	46.35	100	188	Average
5320	101.62	103.44	/	/	34.6	9.88	46.3	100	188	Peak
5320	93.43	95.25	/	/	34.6	9.88	46.3	100	188	Average
5350	55.6	57.36	74	-18.4	34.6	9.94	46.3	100	188	Peak
5350	48.91	50.67	54	-5.09	34.6	9.94	46.3	100	188	Average

REMARKS:

1. Emission Level = Read Level+ Antenna Factor + Cable Loss- Preamp Factor
   Margin value = Emission level – Limit value.
2. 5320MHz: Fundamental frequency.

802.11n (40MHz)

CHANNEL	TX Channel 54	DETECTOR FUNCTION	Peak (PK)
FREQUENCY RANGE	1GHz ~ 40GHz		Average (AV)

ANTENNA POLARITY & TEST DISTANCE: HORIZONTAL AT 3 M										
FREQ. (MHz)	EMISSION LEVEL (dBuV/m)	READ LEVEL (dBuV)	LIMIT (dBuV/m)	MARGIN (dB)	ANTENNA FACTOR (dB /m)	CABLE LOSS (dB)	PREAMP FACTOR (dB)	ANTENNA HEIGHT (cm)	TABLE ANGLE (Degree)	REMARK
5150	53.47	55.78	74	-20.53	34.52	9.52	46.35	200	340	Peak
5150	47.1	49.41	54	-6.9	34.52	9.52	46.35	200	340	Average
5270	97.06	98.99	/	/	34.62	9.77	46.32	200	340	Peak
5270	89.93	91.86	/	/	34.62	9.77	46.32	200	340	Average
5350	52.35	54.03	74	-21.65	34.68	9.94	46.3	200	340	Peak
5350	47.26	48.94	54	-6.74	34.68	9.94	46.3	200	340	Average
ANTENNA POLARITY & TEST DISTANCE: VERTICAL AT 3 M										
FREQ. (MHz)	EMISSION LEVEL (dBuV/m)	READ LEVEL (dBuV)	LIMIT (dBuV/m)	MARGIN (dB)	ANTENNA FACTOR (dB /m)	CABLE LOSS (dB)	PREAMP FACTOR (dB)	ANTENNA HEIGHT (cm)	TABLE ANGLE (Degree)	REMARK
5150	53.76	55.99	74	-20.24	34.6	9.52	46.35	100	188	Peak
5150	46.81	49.04	54	-7.19	34.6	9.52	46.35	100	188	Average
5270	98.09	100.04	/	/	34.6	9.77	46.32	100	188	Peak
5270	91.67	93.62	/	/	34.6	9.77	46.32	100	188	Average
5350	53.47	55.23	74	-20.53	34.6	9.94	46.3	100	188	Peak
5350	47.07	48.83	54	-6.93	34.6	9.94	46.3	100	188	Average

REMARKS:

1. Emission Level = Read Level+ Antenna Factor + Cable Loss- Preamp Factor
   Margin value = Emission level – Limit value.
2. 5270MHz: Fundamental frequency.

CHANNEL	TX Channel 62	DETECTOR FUNCTION	Peak (PK)
FREQUENCY RANGE	1GHz ~ 40GHz		Average (AV)

ANTENNA POLARITY & TEST DISTANCE: HORIZONTAL AT 3 M										
FREQ. (MHz)	EMISSION LEVEL (dBuV/m)	READ LEVEL (dBuV)	LIMIT (dBuV/m)	MARGIN (dB)	ANTENNA FACTOR (dB /m)	CABLE LOSS (dB)	PREAMP FACTOR (dB)	ANTENNA HEIGHT (cm)	TABLE ANGLE (Degree)	REMARK
5150	56.81	59.12	74	-17.19	34.52	9.52	46.35	170	185	Peak
5150	48.99	51.3	54	-5.01	34.52	9.52	46.35	170	185	Average
5310	96.35	98.16	/	/	34.65	9.85	46.31	170	185	Peak
5310	89.89	91.7	/	/	34.65	9.85	46.31	170	185	Average
5350	59.18	60.86	74	-14.82	34.68	9.94	46.3	170	185	Peak
5350	52.54	54.22	54	-1.46	34.68	9.94	46.3	170	185	Average
ANTENNA POLARITY & TEST DISTANCE: VERTICAL AT 3 M										
FREQ. (MHz)	EMISSION LEVEL (dBuV/m)	READ LEVEL (dBuV)	LIMIT (dBuV/m)	MARGIN (dB)	ANTENNA FACTOR (dB /m)	CABLE LOSS (dB)	PREAMP FACTOR (dB)	ANTENNA HEIGHT (cm)	TABLE ANGLE (Degree)	REMARK
5150	54.24	56.47	74	-19.76	34.6	9.52	46.35	100	185	Peak
5150	48.67	50.9	54	-5.33	34.6	9.52	46.35	100	185	Average
5310	97.8	99.66	/	/	34.6	9.85	46.31	100	185	Peak
5310	90.49	92.35	/	/	34.6	9.85	46.31	100	185	Average
5350	59.23	60.99	74	-14.77	34.6	9.94	46.3	100	185	Peak
5350	52.84	54.6	54	-1.16	34.6	9.94	46.3	100	185	Average

REMARKS:

1. Emission Level = Read Level+ Antenna Factor + Cable Loss- Preamp Factor
   Margin value = Emission level – Limit value.
2. 5310MHz: Fundamental frequency.

802.11ac (20MHz)

CHANNEL	TX Channel 52	DETECTOR FUNCTION	Peak (PK) Average (AV)
FREQUENCY RANGE	1GHz ~ 40GHz		

ANTENNA POLARITY & TEST DISTANCE: HORIZONTAL AT 3 M										
FREQ. (MHz)	EMISSION LEVEL (dBuV/m)	READ LEVEL (dBuV)	LIMIT (dBuV/m)	MARGIN (dB)	ANTENNA FACTOR (dB /m)	CABLE LOSS (dB)	PREAMP FACTOR (dB)	ANTENNA HEIGHT (cm)	TABLE ANGLE (Degree)	REMARK
5150	53.55	55.86	74	-20.45	34.52	9.52	46.35	200	340	Peak
5150	47.33	49.64	54	-6.67	34.52	9.52	46.35	200	340	Average
5260	101.67	103.63	/	/	34.61	9.75	46.32	200	340	Peak
5260	93.89	95.85	/	/	34.61	9.75	46.32	200	340	Average
5350	53.01	54.69	74	-20.99	34.68	9.94	46.3	200	340	Peak
5350	46.61	48.29	54	-7.39	34.68	9.94	46.3	200	340	Average
ANTENNA POLARITY & TEST DISTANCE: VERTICAL AT 3 M										
FREQ. (MHz)	EMISSION LEVEL (dBuV/m)	READ LEVEL (dBuV)	LIMIT (dBuV/m)	MARGIN (dB)	ANTENNA FACTOR (dB /m)	CABLE LOSS (dB)	PREAMP FACTOR (dB)	ANTENNA HEIGHT (cm)	TABLE ANGLE (Degree)	REMARK
5150	53.93	56.16	74	-20.07	34.6	9.52	46.35	100	188	Peak
5150	47.09	49.32	54	-6.91	34.6	9.52	46.35	100	188	Average
5260	102.75	104.72	/	/	34.6	9.75	46.32	100	188	Peak
5260	94.38	96.35	/	/	34.6	9.75	46.32	100	188	Average
5350	54.42	56.18	74	-19.58	34.6	9.94	46.3	100	188	Peak
5350	46.24	48	54	-7.76	34.6	9.94	46.3	100	188	Average

REMARKS:

1. Emission Level = Read Level+ Antenna Factor + Cable Loss- Preamp Factor
   Margin value = Emission level – Limit value.
2. 5260MHz: Fundamental frequency.

CHANNEL	TX Channel 60	DETECTOR FUNCTION	Peak (PK) Average (AV)
FREQUENCY RANGE	1GHz ~ 40GHz		

ANTENNA POLARITY & TEST DISTANCE: HORIZONTAL AT 3 M										
FREQ. (MHz)	EMISSION LEVEL (dBuV/m)	READ LEVEL (dBuV)	LIMIT (dBuV/m)	MARGIN (dB)	ANTENNA FACTOR (dB /m)	CABLE LOSS (dB)	PREAMP FACTOR (dB)	ANTENNA HEIGHT (cm)	TABLE ANGLE (Degree)	REMARK
5150	53.75	56.06	74	-20.25	34.52	9.52	46.35	200	340	Peak
5150	47.28	49.59	54	-6.72	34.52	9.52	46.35	200	340	Average
5300	101.52	103.36	/	/	34.64	9.83	46.31	200	340	Peak
5300	93.16	95	/	/	34.64	9.83	46.31	200	340	Average
5350	52.76	54.44	74	-21.24	34.68	9.94	46.3	200	340	Peak
5350	47.13	48.81	54	-6.87	34.68	9.94	46.3	200	340	Average
ANTENNA POLARITY & TEST DISTANCE: VERTICAL AT 3 M										
FREQ. (MHz)	EMISSION LEVEL (dBuV/m)	READ LEVEL (dBuV)	LIMIT (dBuV/m)	MARGIN (dB)	ANTENNA FACTOR (dB /m)	CABLE LOSS (dB)	PREAMP FACTOR (dB)	ANTENNA HEIGHT (cm)	TABLE ANGLE (Degree)	REMARK
5150	54.28	56.51	74	-19.72	34.6	9.52	46.35	100	188	Peak
5150	47.13	49.36	54	-6.87	34.6	9.52	46.35	100	188	Average
5300	102.12	104	/	/	34.6	9.83	46.31	100	188	Peak
5300	93.79	95.67	/	/	34.6	9.83	46.31	100	188	Average
5350	53.22	54.98	74	-20.78	34.6	9.94	46.3	100	188	Peak
5350	46.98	48.74	54	-7.02	34.6	9.94	46.3	100	188	Average

REMARKS:

1. Emission Level = Read Level+ Antenna Factor + Cable Loss- Preamp Factor
   Margin value = Emission level – Limit value.
2. 5300MHz: Fundamental frequency.

CHANNEL	TX Channel 64	DETECTOR FUNCTION	Peak (PK) Average (AV)
FREQUENCY RANGE	1GHz ~ 40GHz		

ANTENNA POLARITY & TEST DISTANCE: HORIZONTAL AT 3 M										
FREQ. (MHz)	EMISSION LEVEL (dBuV/m)	READ LEVEL (dBuV)	LIMIT (dBuV/m)	MARGIN (dB)	ANTENNA FACTOR (dB /m)	CABLE LOSS (dB)	PREAMP FACTOR (dB)	ANTENNA HEIGHT (cm)	TABLE ANGLE (Degree)	REMARK
5150	54.41	56.72	74	-19.59	34.52	9.52	46.35	200	340	Peak
5150	47.58	49.89	54	-6.42	34.52	9.52	46.35	200	340	Average
5320	101.04	102.8	/	/	34.66	9.88	46.3	200	340	Peak
5320	92.75	94.51	/	/	34.66	9.88	46.3	200	340	Average
5350	55.87	57.55	74	-18.13	34.68	9.94	46.3	200	340	Peak
5350	48.6	50.28	54	-5.4	34.68	9.94	46.3	200	340	Average
ANTENNA POLARITY & TEST DISTANCE: VERTICAL AT 3 M										
FREQ. (MHz)	EMISSION LEVEL (dBuV/m)	READ LEVEL (dBuV)	LIMIT (dBuV/m)	MARGIN (dB)	ANTENNA FACTOR (dB /m)	CABLE LOSS (dB)	PREAMP FACTOR (dB)	ANTENNA HEIGHT (cm)	TABLE ANGLE (Degree)	REMARK
5150	54.67	56.9	74	-19.33	34.6	9.52	46.35	100	185	Peak
5150	46.86	49.09	54	-7.14	34.6	9.52	46.35	100	185	Average
5320	101.21	103.03	/	/	34.6	9.88	46.3	100	185	Peak
5320	93.05	94.87	/	/	34.6	9.88	46.3	100	185	Average
5350	56.36	58.12	74	-17.64	34.6	9.94	46.3	100	185	Peak
5350	49.14	50.9	54	-4.86	34.6	9.94	46.3	100	185	Average

REMARKS:

1. Emission Level = Read Level+ Antenna Factor + Cable Loss- Preamp Factor
   Margin value = Emission level – Limit value.
2. 5320MHz: Fundamental frequency.

802.11ac (40MHz)

CHANNEL	TX Channel 54	**DETECTOR FUNCTION**	Peak (PK) Average (AV)
FREQUENCY RANGE	1GHz ~ 40GHz		

ANTENNA POLARITY & TEST DISTANCE: HORIZONTAL AT 3 M										
FREQ. (MHz)	**EMISSION LEVEL (dBuV/m)**	**READ LEVEL (dBuV)**	**LIMIT (dBuV/m)**	**MARGIN (dB)**	**ANTENNA FACTOR (dB /m)**	**CABLE LOSS (dB)**	**PREAMP FACTOR (dB)**	**ANTENNA HEIGHT (cm)**	**TABLE ANGLE (Degree)**	**REMARK**
5150	55.31	57.62	74	-18.69	34.52	9.52	46.35	100	335	Peak
5150	49.39	51.7	54	-4.61	34.52	9.52	46.35	100	335	Average
5270	93.66	95.59	/	/	34.62	9.77	46.32	100	335	Peak
5270	86.09	88.02	/	/	34.62	9.77	46.32	100	335	Average
5350	53.89	55.57	74	-20.11	34.68	9.94	46.3	100	335	Peak
5350	48.1	49.78	54	-5.9	34.68	9.94	46.3	100	335	Average
ANTENNA POLARITY & TEST DISTANCE: VERTICAL AT 3 M										
FREQ. (MHz)	**EMISSION LEVEL (dBuV/m)**	**READ LEVEL (dBuV)**	**LIMIT (dBuV/m)**	**MARGIN (dB)**	**ANTENNA FACTOR (dB /m)**	**CABLE LOSS (dB)**	**PREAMP FACTOR (dB)**	**ANTENNA HEIGHT (cm)**	**TABLE ANGLE (Degree)**	**REMARK**
5150	53.98	56.21	74	-20.02	34.6	9.52	46.35	100	170	Peak
5150	49.2	51.43	54	-4.8	34.6	9.52	46.35	100	170	Average
5270	94.58	96.53	/	/	34.6	9.77	46.32	100	170	Peak
5270	87.07	89.02	/	/	34.6	9.77	46.32	100	170	Average
5350	54.17	55.93	74	-19.83	34.6	9.94	46.3	100	170	Peak
5350	47.79	49.55	54	-6.21	34.6	9.94	46.3	100	170	Average

REMARKS:

1. Emission Level = Read Level+ Antenna Factor + Cable Loss- Preamp Factor
   Margin value = Emission level – Limit value.
2. 5270MHz: Fundamental frequency.

CHANNEL	TX Channel 62	DETECTOR FUNCTION	Peak (PK)
FREQUENCY RANGE	1GHz ~ 40GHz		Average (AV)

ANTENNA POLARITY & TEST DISTANCE: HORIZONTAL AT 3 M										
FREQ. (MHz)	EMISSION LEVEL (dBuV/m)	READ LEVEL (dBuV)	LIMIT (dBuV/m)	MARGIN (dB)	ANTENNA FACTOR (dB /m)	CABLE LOSS (dB)	PREAMP FACTOR (dB)	ANTENNA HEIGHT (cm)	TABLE ANGLE (Degree)	REMARK
5150	54.3	56.61	74	-19.7	34.52	9.52	46.35	100	335	Peak
5150	49.77	52.08	54	-4.23	34.52	9.52	46.35	100	335	Average
5310	93.35	95.16	/	/	34.65	9.85	46.31	100	335	Peak
5310	87.64	89.45	/	/	34.65	9.85	46.31	100	335	Average
5350	56.71	58.39	74	-17.29	34.68	9.94	46.3	100	335	Peak
5350	50.28	51.96	54	-3.72	34.68	9.94	46.3	100	335	Average
ANTENNA POLARITY & TEST DISTANCE: VERTICAL AT 3 M										
FREQ. (MHz)	EMISSION LEVEL (dBuV/m)	READ LEVEL (dBuV)	LIMIT (dBuV/m)	MARGIN (dB)	ANTENNA FACTOR (dB /m)	CABLE LOSS (dB)	PREAMP FACTOR (dB)	ANTENNA HEIGHT (cm)	TABLE ANGLE (Degree)	REMARK
5150	54.85	57.08	74	-19.15	34.6	9.52	46.35	100	170	Peak
5150	49.44	51.67	54	-4.56	34.6	9.52	46.35	100	170	Average
5310	94.45	96.31	/	/	34.6	9.85	46.31	100	170	Peak
5310	87.09	88.95	/	/	34.6	9.85	46.31	100	170	Average
5350	54.29	56.05	74	-19.71	34.6	9.94	46.3	100	170	Peak
5350	48.38	50.14	54	-5.62	34.6	9.94	46.3	100	170	Average

REMARKS:

1. Emission Level = Read Level+ Antenna Factor + Cable Loss- Preamp Factor
   Margin value = Emission level – Limit value.
2. 5310MHz: Fundamental frequency.

802.11ac (80MHz)

CHANNEL	TX Channel 58	DETECTOR FUNCTION	Peak (PK)
FREQUENCY RANGE	1GHz ~ 40GHz		Average (AV)

ANTENNA POLARITY & TEST DISTANCE: HORIZONTAL AT 3 M										
FREQ. (MHz)	EMISSION LEVEL (dBuV/m)	READ LEVEL (dBuV)	LIMIT (dBuV/m)	MARGIN (dB)	ANTENNA FACTOR (dB /m)	CABLE LOSS (dB)	PREAMP FACTOR (dB)	ANTENNA HEIGHT (cm)	TABLE ANGLE (Degree)	REMARK
5150	54.51	56.82	74	-19.49	34.52	9.52	46.35	100	325	Peak
5150	49.95	52.26	54	-4.05	34.52	9.52	46.35	100	325	Average
5290	90.94	92.81	/	/	34.63	9.81	46.31	100	325	Peak
5290	83.48	85.35	/	/	34.63	9.81	46.31	100	325	Average
5350	55.26	56.94	74	-18.74	34.68	9.94	46.3	100	325	Peak
5350	50.74	52.42	54	-3.26	34.68	9.94	46.3	100	325	Average
ANTENNA POLARITY & TEST DISTANCE: VERTICAL AT 3 M										
FREQ. (MHz)	EMISSION LEVEL (dBuV/m)	READ LEVEL (dBuV)	LIMIT (dBuV/m)	MARGIN (dB)	ANTENNA FACTOR (dB /m)	CABLE LOSS (dB)	PREAMP FACTOR (dB)	ANTENNA HEIGHT (cm)	TABLE ANGLE (Degree)	REMARK
5150	55.49	57.72	74	-18.51	34.6	9.52	46.35	100	165	Peak
5150	50.49	52.72	54	-3.51	34.6	9.52	46.35	100	165	Average
5290	90.5	92.4	/	/	34.6	9.81	46.31	100	165	Peak
5290	83.5	85.4	/	/	34.6	9.81	46.31	100	165	Average
5350	54.76	56.52	74	-19.24	34.6	9.94	46.3	100	165	Peak
5350	50.93	52.69	54	-3.07	34.6	9.94	46.3	100	165	Average

REMARKS:

1. Emission Level = Read Level+ Antenna Factor + Cable Loss- Preamp Factor
   Margin value = Emission level – Limit value.
2. 5290MHz: Fundamental frequency.

Band 3

802.11a

CHANNEL	TX Channel 100	DETECTOR FUNCTION	Peak (PK) Average (AV)
FREQUENCY RANGE	1GHz ~ 40GHz		

ANTENNA POLARITY & TEST DISTANCE: HORIZONTAL AT 3 M										
FREQ. (MHz)	EMISSION LEVEL (dBuV/m)	READ LEVEL (dBuV)	LIMIT (dBuV/m)	MARGIN (dB)	ANTENNA FACTOR (dB /m)	CABLE LOSS (dB)	PREAMP FACTOR (dB)	ANTENNA HEIGHT (cm)	TABLE ANGLE (Degree)	REMARK
5460	54.77	56.09	74	-19.23	34.77	10.17	46.26	100	360	Peak
5460	47.71	49.03	54	-6.29	34.77	10.17	46.26	100	360	Average
5470	56.08	57.37	68.2	-12.12	34.78	10.19	46.26	100	360	Peak
5500	98.07	99.26	/	/	34.8	10.26	46.25	100	360	Peak
5500	91.08	92.27	/	/	34.8	10.26	46.25	100	360	Average
ANTENNA POLARITY & TEST DISTANCE: VERTICAL AT 3 M										
FREQ. (MHz)	EMISSION LEVEL (dBuV/m)	READ LEVEL (dBuV)	LIMIT (dBuV/m)	MARGIN (dB)	ANTENNA FACTOR (dB /m)	CABLE LOSS (dB)	PREAMP FACTOR (dB)	ANTENNA HEIGHT (cm)	TABLE ANGLE (Degree)	REMARK
5460	54.71	56.2	74	-19.29	34.6	10.17	46.26	100	50	Peak
5460	48.24	49.73	54	-5.76	34.6	10.17	46.26	100	50	Average
5470	55.27	56.74	68.2	-12.93	34.6	10.19	46.26	100	50	Peak
5500	99.37	100.76	/	/	34.6	10.26	46.25	100	50	Peak
5500	92.38	93.77	/	/	34.6	10.26	46.25	100	50	Average

REMARKS:

1. Emission Level = Read Level+ Antenna Factor + Cable Loss- Preamp Factor
   Margin value = Emission level – Limit value.
2. 5500MHz: Fundamental frequency.
3. #: Out of restricted band.

CHANNEL	TX Channel 116	DETECTOR FUNCTION	Peak (PK) Average (AV)
FREQUENCY RANGE	1GHz ~ 40GHz		

ANTENNA POLARITY & TEST DISTANCE: HORIZONTAL AT 3 M										
FREQ. (MHz)	EMISSION LEVEL (dBuV/m)	READ LEVEL (dBuV)	LIMIT (dBuV/m)	MARGIN (dB)	ANTENNA FACTOR (dB /m)	CABLE LOSS (dB)	PREAMP FACTOR (dB)	ANTENNA HEIGHT (cm)	TABLE ANGLE (Degree)	REMARK
5460	55.31	56.63	74	-18.69	34.77	10.17	46.26	100	0	Peak
5460	49.28	50.6	54	-4.72	34.77	10.17	46.26	100	0	Average
5470	54.55	55.84	68.2	-13.65	34.78	10.19	46.26	100	0	Peak
5580	99.88	100.62	/	/	34.9	10.59	46.23	100	0	Peak
5580	93.96	94.7	/	/	34.9	10.59	46.23	100	0	Average
ANTENNA POLARITY & TEST DISTANCE: VERTICAL AT 3 M										
FREQ. (MHz)	EMISSION LEVEL (dBuV/m)	READ LEVEL (dBuV)	LIMIT (dBuV/m)	MARGIN (dB)	ANTENNA FACTOR (dB /m)	CABLE LOSS (dB)	PREAMP FACTOR (dB)	ANTENNA HEIGHT (cm)	TABLE ANGLE (Degree)	REMARK
5460	54.9	56.39	74	-19.1	34.6	10.17	46.26	100	50	Peak
5460	48.85	50.34	54	-5.15	34.6	10.17	46.26	100	50	Average
5470	54.74	56.21	68.2	-13.46	34.6	10.19	46.26	100	50	Peak
5580	98.24	99.18	/	/	34.7	10.59	46.23	100	50	Peak
5580	92.44	93.38	/	/	34.7	10.59	46.23	100	50	Average

REMARKS:

1. Emission Level = Read Level+ Antenna Factor + Cable Loss- Preamp Factor
   Margin value = Emission level – Limit value.
2. 5580MHz: Fundamental frequency.
3. #: Out of restricted band.

CHANNEL	TX Channel 140	**DETECTOR FUNCTION**	Peak (PK) Average (AV)
FREQUENCY RANGE	1GHz ~ 40GHz		

ANTENNA POLARITY & TEST DISTANCE: HORIZONTAL AT 3 M										
FREQ. (MHz)	**EMISSION LEVEL (dBuV/m)**	**READ LEVEL (dBuV)**	**LIMIT (dBuV/m)**	**MARGIN (dB)**	**ANTENNA FACTOR (dB /m)**	**CABLE LOSS (dB)**	**PREAMP FACTOR (dB)**	**ANTENNA HEIGHT (cm)**	**TABLE ANGLE (Degree)**	**REMARK**
5700	100.5	100.56	/	/	35.04	11.09	46.19	100	0	Peak
5700	94.84	94.9	/	/	35.04	11.09	46.19	100	0	Average
5725	59.2	59.12	68.2	-9	35.07	11.2	46.19	100	0	Peak
ANTENNA POLARITY & TEST DISTANCE: VERTICAL AT 3 M										
FREQ. (MHz)	**EMISSION LEVEL (dBuV/m)**	**READ LEVEL (dBuV)**	**LIMIT (dBuV/m)**	**MARGIN (dB)**	**ANTENNA FACTOR (dB /m)**	**CABLE LOSS (dB)**	**PREAMP FACTOR (dB)**	**ANTENNA HEIGHT (cm)**	**TABLE ANGLE (Degree)**	**REMARK**
5700	104.53	104.79	/	/	34.84	11.09	46.19	100	190	Peak
5700	97.44	97.7	/	/	34.84	11.09	46.19	100	190	Average
5725	60.04	60.16	68.2	-8.16	34.87	11.2	46.19	100	190	Peak

REMARKS:

1. Emission Level = Read Level+ Antenna Factor + Cable Loss- Preamp Factor
   Margin value = Emission level – Limit value.
2. 5700MHz: Fundamental frequency.
3. #: Out of restricted band.

802.11n (20MHz)

CHANNEL	TX Channel 100	**DETECTOR FUNCTION**	Peak (PK) Average (AV)
FREQUENCY RANGE	1GHz ~ 40GHz		

ANTENNA POLARITY & TEST DISTANCE: HORIZONTAL AT 3 M										
FREQ. (MHz)	EMISSION LEVEL (dBuV/m)	READ LEVEL (dBuV)	LIMIT (dBuV/m)	MARGIN (dB)	ANTENNA FACTOR (dB /m)	CABLE LOSS (dB)	PREAMP FACTOR (dB)	ANTENNA HEIGHT (cm)	TABLE ANGLE (Degree)	REMARK
5460	54.79	56.11	74	-19.21	34.77	10.17	46.26	100	0	Peak
5460	49.34	50.66	54	-4.66	34.77	10.17	46.26	100	0	Average
5470	55.09	56.38	68.2	-13.11	34.78	10.19	46.26	100	0	Peak
5500	98.32	99.51	/	/	34.8	10.26	46.25	100	0	Peak
5500	91.43	92.62	/	/	34.8	10.26	46.25	100	0	Average
ANTENNA POLARITY & TEST DISTANCE: VERTICAL AT 3 M										
FREQ. (MHz)	EMISSION LEVEL (dBuV/m)	READ LEVEL (dBuV)	LIMIT (dBuV/m)	MARGIN (dB)	ANTENNA FACTOR (dB /m)	CABLE LOSS (dB)	PREAMP FACTOR (dB)	ANTENNA HEIGHT (cm)	TABLE ANGLE (Degree)	REMARK
5460	54.9	56.39	74	-19.1	34.6	10.17	46.26	100	48	Peak
5460	48.51	50	54	-5.49	34.6	10.17	46.26	100	48	Average
5470	57.4	58.87	68.2	-10.8	34.6	10.19	46.26	100	48	Peak
5500	99.72	101.11	/	/	34.6	10.26	46.25	100	48	Peak
5500	92.48	93.87	/	/	34.6	10.26	46.25	100	48	Average

REMARKS:

1. Emission Level = Read Level+ Antenna Factor + Cable Loss- Preamp Factor
   Margin value = Emission level – Limit value.
2. 5500MHz: Fundamental frequency.
3. #: Out of restricted band.

CHANNEL	TX Channel 116	DETECTOR FUNCTION	Peak (PK) Average (AV)
FREQUENCY RANGE	1GHz ~ 40GHz		

ANTENNA POLARITY & TEST DISTANCE: HORIZONTAL AT 3 M										
FREQ. (MHz)	EMISSION LEVEL (dBuV/m)	READ LEVEL (dBuV)	LIMIT (dBuV/m)	MARGIN (dB)	ANTENNA FACTOR (dB /m)	CABLE LOSS (dB)	PREAMP FACTOR (dB)	ANTENNA HEIGHT (cm)	TABLE ANGLE (Degree)	REMARK
5460	53.27	54.59	74	-20.73	34.77	10.17	46.26	170	200	Peak
5460	47.04	48.36	54	-6.96	34.77	10.17	46.26	170	200	Average
5470	53.56	54.85	68.2	-14.64	34.78	10.19	46.26	170	200	Peak
5580	104.06	104.8	/	/	34.9	10.59	46.23	170	200	Peak
5580	96.44	97.18	/	/	34.9	10.59	46.23	170	200	Average
ANTENNA POLARITY & TEST DISTANCE: VERTICAL AT 3 M										
FREQ. (MHz)	EMISSION LEVEL (dBuV/m)	READ LEVEL (dBuV)	LIMIT (dBuV/m)	MARGIN (dB)	ANTENNA FACTOR (dB /m)	CABLE LOSS (dB)	PREAMP FACTOR (dB)	ANTENNA HEIGHT (cm)	TABLE ANGLE (Degree)	REMARK
5460	54.9	56.39	74	-19.1	34.6	10.17	46.26	108	180	Peak
5460	46.95	48.44	54	-7.05	34.6	10.17	46.26	108	180	Average
5470	53.02	54.49	68.2	-15.18	34.6	10.19	46.26	108	180	Peak
5580	105.36	106.3	/	/	34.7	10.59	46.23	108	180	Peak
5580	97.01	97.95	/	/	34.7	10.59	46.23	108	180	Average

REMARKS:

1. Emission Level = Read Level+ Antenna Factor + Cable Loss- Preamp Factor
   Margin value = Emission level – Limit value.
2. 5580MHz: Fundamental frequency.
3. #: Out of restricted band.

CHANNEL	TX Channel 140	**DETECTOR FUNCTION**	Peak (PK) Average (AV)
FREQUENCY RANGE	1GHz ~ 40GHz		

ANTENNA POLARITY & TEST DISTANCE: HORIZONTAL AT 3 M										
FREQ. (MHz)	**EMISSION LEVEL (dBuV/m)**	**READ LEVEL (dBuV)**	**LIMIT (dBuV/m)**	**MARGIN (dB)**	**ANTENNA FACTOR (dB /m)**	**CABLE LOSS (dB)**	**PREAMP FACTOR (dB)**	**ANTENNA HEIGHT (cm)**	**TABLE ANGLE (Degree)**	**REMARK**
5700	105.14	105.2	/	/	35.04	11.09	46.19	100	12	Peak
5700	97.06	97.12	/	/	35.04	11.09	46.19	100	12	Average
5725	62.03	61.95	68.2	-6.17	35.07	11.2	46.19	100	12	Peak
ANTENNA POLARITY & TEST DISTANCE: VERTICAL AT 3 M										
FREQ. (MHz)	**EMISSION LEVEL (dBuV/m)**	**READ LEVEL (dBuV)**	**LIMIT (dBuV/m)**	**MARGIN (dB)**	**ANTENNA FACTOR (dB /m)**	**CABLE LOSS (dB)**	**PREAMP FACTOR (dB)**	**ANTENNA HEIGHT (cm)**	**TABLE ANGLE (Degree)**	**REMARK**
5700	105.91	106.17	/	/	34.84	11.09	46.19	108	180	Peak
5700	98.23	98.49	/	/	34.84	11.09	46.19	108	180	Average
5725	63.08	63.34	68.2	-5.12	34.84	11.09	46.19	108	180	Peak

REMARKS:

1. Emission Level = Read Level+ Antenna Factor + Cable Loss- Preamp Factor
   Margin value = Emission level – Limit value.
2. 5700MHz: Fundamental frequency.
3. #: Out of restricted band.

802.11n (40MHz)

CHANNEL	TX Channel 102	DETECTOR FUNCTION	Peak (PK)
FREQUENCY RANGE	1GHz ~ 40GHz		Average (AV)

ANTENNA POLARITY & TEST DISTANCE: HORIZONTAL AT 3 M										
FREQ. (MHz)	EMISSION LEVEL (dBuV/m)	READ LEVEL (dBuV)	LIMIT (dBuV/m)	MARGIN (dB)	ANTENNA FACTOR (dB /m)	CABLE LOSS (dB)	PREAMP FACTOR (dB)	ANTENNA HEIGHT (cm)	TABLE ANGLE (Degree)	REMARK
5460	55.6	56.92	74	-18.4	34.77	10.17	46.26	100	0	Peak
5460	50.36	51.68	54	-3.64	34.77	10.17	46.26	100	0	Average
5470	63.39	64.68	68.2	-4.81	34.78	10.19	46.26	100	0	Peak
5510	93.56	94.7	/	/	34.81	10.3	46.25	100	0	Peak
5510	87.84	88.98	/	/	34.81	10.3	46.25	100	0	Average
ANTENNA POLARITY & TEST DISTANCE: VERTICAL AT 3 M										
FREQ. (MHz)	EMISSION LEVEL (dBuV/m)	READ LEVEL (dBuV)	LIMIT (dBuV/m)	MARGIN (dB)	ANTENNA FACTOR (dB /m)	CABLE LOSS (dB)	PREAMP FACTOR (dB)	ANTENNA HEIGHT (cm)	TABLE ANGLE (Degree)	REMARK
5460	54.93	56.42	74	-19.07	34.6	10.17	46.26	100	185	Peak
5460	50.45	51.94	54	-3.55	34.6	10.17	46.26	100	185	Average
5470	60.39	61.86	68.2	-7.81	34.6	10.19	46.26	100	185	Peak
5510	94.13	95.47	/	/	34.61	10.3	46.25	100	185	Peak
5510	88.46	89.8	/	/	34.61	10.3	46.25	100	185	Average

REMARKS:

1. Emission Level = Read Level+ Antenna Factor + Cable Loss- Preamp Factor
   Margin value = Emission level – Limit value.
2. 5510MHz: Fundamental frequency.
3. #: Out of restricted band.

CHANNEL	TX Channel 110	DETECTOR FUNCTION	Peak (PK) Average (AV)
FREQUENCY RANGE	1GHz ~ 40GHz		

ANTENNA POLARITY & TEST DISTANCE: HORIZONTAL AT 3 M										
FREQ. (MHz)	EMISSION LEVEL (dBuV/m)	READ LEVEL (dBuV)	LIMIT (dBuV/m)	MARGIN (dB)	ANTENNA FACTOR (dB /m)	CABLE LOSS (dB)	PREAMP FACTOR (dB)	ANTENNA HEIGHT (cm)	TABLE ANGLE (Degree)	REMARK
5460	53.33	54.65	74	-20.67	34.77	10.17	46.26	178	200	Peak
5460	47.41	48.73	54	-6.59	34.77	10.17	46.26	178	200	Average
5470	53.82	55.11	68.2	-14.38	34.78	10.19	46.26	178	200	Peak
5550	97.47	98.38	/	/	34.86	10.47	46.24	178	200	Peak
5550	91.27	92.18	/	/	34.86	10.47	46.24	178	200	Average
ANTENNA POLARITY & TEST DISTANCE: VERTICAL AT 3 M										
FREQ. (MHz)	EMISSION LEVEL (dBuV/m)	READ LEVEL (dBuV)	LIMIT (dBuV/m)	MARGIN (dB)	ANTENNA FACTOR (dB /m)	CABLE LOSS (dB)	PREAMP FACTOR (dB)	ANTENNA HEIGHT (cm)	TABLE ANGLE (Degree)	REMARK
5460	52.25	53.74	74	-21.75	34.6	10.17	46.26	105	180	Peak
5460	47.43	48.92	54	-6.57	34.6	10.17	46.26	105	180	Average
5470	53.13	54.6	68.2	-15.07	34.6	10.19	46.26	105	180	Peak
5550	99.39	100.5	/	/	34.66	10.47	46.24	105	180	Peak
5550	93.5	94.61	/	/	34.66	10.47	46.24	105	180	Average

REMARKS:

1. Emission Level = Read Level+ Antenna Factor + Cable Loss- Preamp Factor
   Margin value = Emission level – Limit value.
2. 5500MHz: Fundamental frequency.
3. #: Out of restricted band.