QUICK START GUIDE

Follow these instructions and you'll be playing in just few minutes

1 Download The Free App

GET IT ON Google Play | Download on the App Store

Search on the Apple App Store or Google Play for ***VR Real Feel™ Motorcycle.***

System requirement: Android 4.4 or above iOS 9.3* or above
* The minimum OS requirement may change from time to time - always check www.vr-entertain.com for the latest OS requirements.

2 Install Batteries

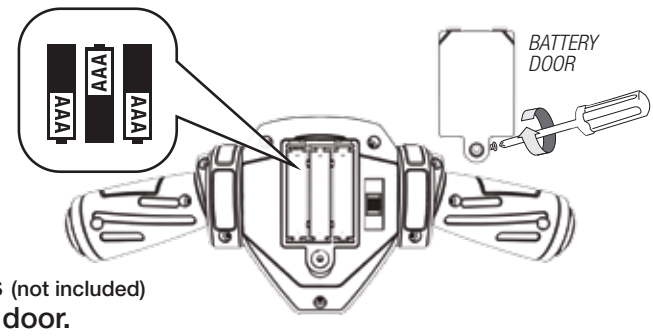

Unscrew the battery door on the handlebar.

Install 3 x AAA batteries (not included) and replace the battery door.

ALKALINE BATTERIES RECOMMENDED.

USES 3 x 1.5V "AAA" BATTERIES (NOT INCLUDED)

BATTERY WARNINGS:
RECHARGEABLE BATTERIES NOT RECOMMENDED.
DO NOT MIX OLD AND NEW BATTERIES.
DO NOT MIX ALKALINE, STANDARD (CARBON-ZINC), OR RECHARGEABLE BATTERIES.
BATTERIES ARE TO BE INSERTED WITH THE CORRECT POLARITY.

3 Setting Up Your Smartphone

Turn OFF your WiFi and Cellular data.
This will keep you from being disturbed while playing.
You can also set your phone to "airplane mode"
but be sure your Bluetooth® connectivity is still enabled.

Bluetooth® ***IMPORTANT: Bluetooth® 4.0(BLE) connectivity must be working for you to play with VR Real Feel™ Motorcycle.***

4 Launch the VR REAL FEEL™ App

Click & launch the VR Real Feel™ app on your device.

Turn the ON/OFF switch on the back of the handlebar to ON.

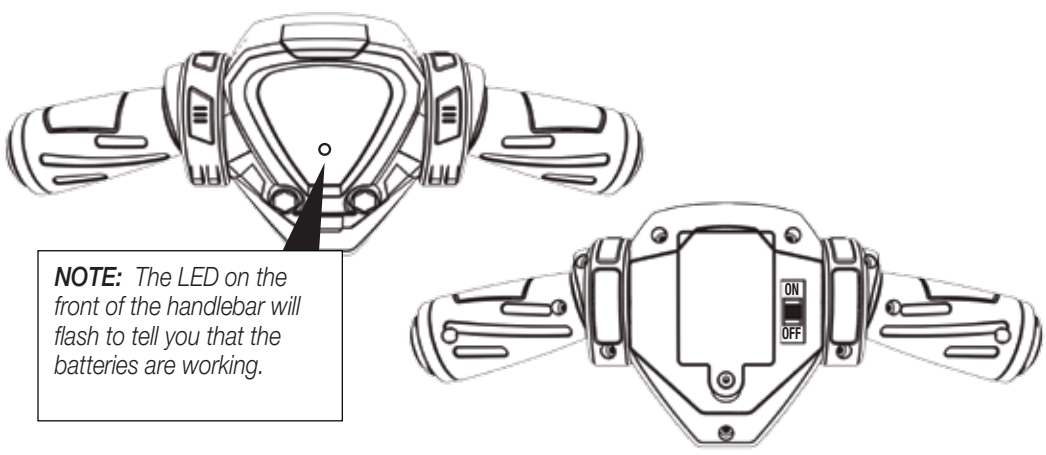

NOTE: *The LED on the front of the handlebar will flash to tell you that the batteries are working.*

Press **SCAN** in the app to connect your handlebar by Bluetooth® technology.
The game will start automatically when the handlebar is successfully connected.

LED on the handlebar should be lit.
This tells you that the Bluetooth® connection was successful.

NOTE:
•*You must have the handlebar connected by Bluetooth® technology for the app to open.*

5 Insert Your Phone

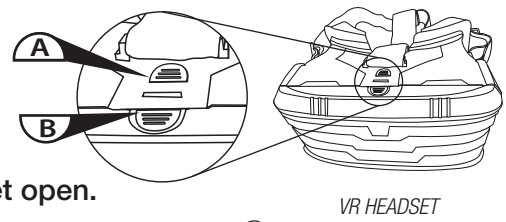

- To open the front of the headset, press both A and B buttons down at the same time and flip the headset open.
- Spread the self-adjusting frame open wide enough to insert your phone. Release and make sure that it holds your phone securely.

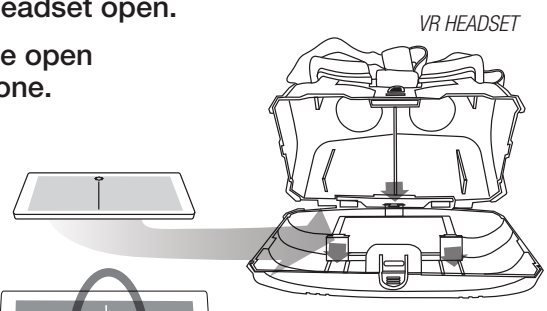

6 Center your phone

- Align the white line on the app screen with the marker on the frame to center your phone properly for optimum viewing. Close the VR headset carefully; make sure the buttons on top are locked.

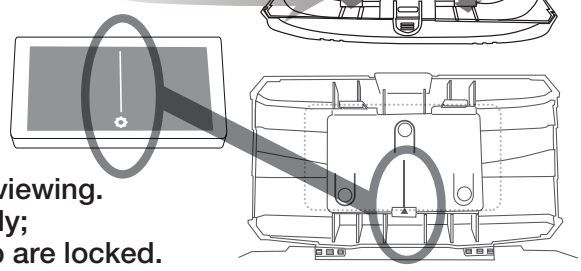

MOUNTAIN FOLD

- For some phone models the frame "clips" may align with control buttons such as power or volume. Attach the included foam pad to the frame clips to minimize pressure on those buttons.

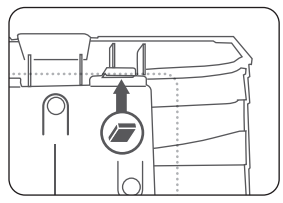

7 Put On the Headset

- Place the headset on your head. Make sure the center strap is centered over the top of your head. Adjust the straps so the headset fits snugly and comfortably.

TIP: If the headset is putting too much weight on your nose, make the center strap shorter.

8 Let's Ride!

- Hold the handlebar and follow the instructions in the app to start the game.
- Select the race you want to play and press the Confirm button.

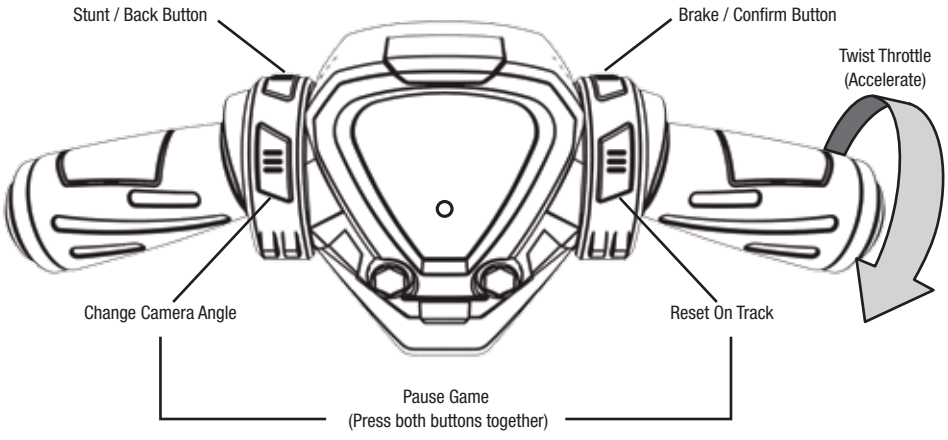

VALLEY FOLD

TIPS AND TROUBLESHOOTING

Make sure that furniture, objects and people are out of the play area so you don't accidentally bump into them while playing.

Because the game is generating stereo high-definition graphics, your phone's battery life may be shorter than with other games. Make sure your phone is well charged before playing.

While playing VR Real Feel™ Motorcycle, you may notice that the phone is warm to the touch. This is normal. If it gets too warm stop the app and let the device cool down.

If the LED on the handlebar does not flash when you turn the ON/OFF switch to ON, replace the batteries and try again.

If the LED does not come on after you press SCAN on the app, check to make sure your Bluetooth® connectivity setting is in the ON position. You must be running Bluetooth® 4.0(BLE) connectivity for the app to open. Restarting the app and the handlebar may also help.

If you want to play silently, plug in your ear buds (not included) through the slot on the side of the headset to your phone.

Bluetooth® headphones are not available for this app because mobile devices cannot connect to both your Bluetooth® earphone and the handlebar at the same time.

VALLEY FOLD

If the VR image in the app is out of focus, follow steps 5 to 7 of this guide to make sure the phone is installed properly.

This device complies with Part 15 of the FCC Rules & Industry Canada license- exempt RSS standard(s).
Operation is subject to the following two conditions:
(1) this device may not cause harmful interference, and
(2) this device must accept any interference received, including interference that may cause undesired operation.

Warning: Changes or modifications to this unit not expressly approved by the party responsible for compliance could void the user's authority to operate the equipment.
NOTE: This equipment has been tested and found to comply with the limits for a Class B digital device, pursuant to Part 15 of the FCC Rules. These limits are designed to provide reasonable protection against harmful interference in a residential installation. This equipment generates, uses and can radiate radio frequency energy and, if not installed and used in accordance with the instructions, may cause harmful interference to radio communications.

However, there is no guarantee that interference will not occur in a particular installation. If this equipment does cause harmful interference to radio or television reception, which can be determined by turning the equipment off and on, the user is encouraged to try to correct the interference by one or more of the following measures:

- Reorient or relocate the receiving antenna.
- Increase the separation between the equipment and receiver.
- Connect the equipment into an outlet on a circuit different from that to which the receiver is connected.
- Consult the dealer or an experienced radio/TV technician for help.

INSTRUCTION VIDEOS :	CUSTOMER SUPPORT :
www.vr-entertain.com	www.toysinquiry.com

VR ENTERTAINMENT LTD.
CHANGHUANG ROAD,
CHANGPING, DONGGUAN, CHINA
MADE IN CHINA

GET IT ON Google Play

Download on the App Store

Android, Google Play and the Google Play logo are trademarks of Google Inc.

Apple, Apple logo, iPod touch and iPhone are trademarks of Apple Inc., registered in the U.S. and other countries. App Store is a service mark of Apple Inc.

Bluetooth®

The Bluetooth® word mark and logos are registered trademarks owned by the Bluetooth SIG, Inc. and any use of such marks by VR-ENTERTAINMENT LTD. is under license. Other trademarks and trade names are those of their respective owners.

66340-US-02
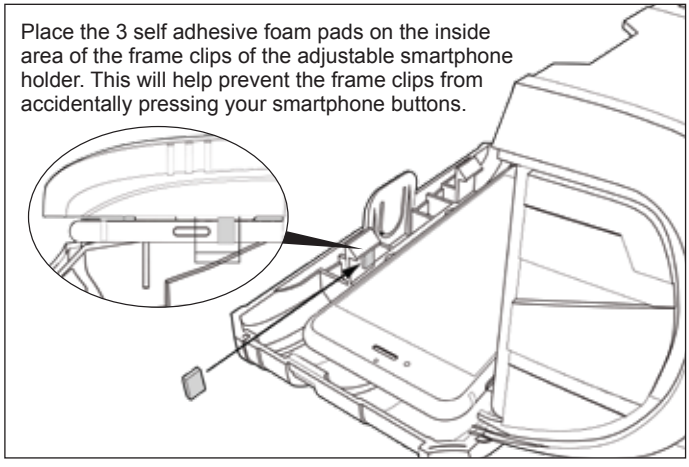
9x6cm 2017-07-05 update