Wireless Doorbell

User Manual

Note:The alarm system has been programmed already, please operate the system according to the part 2 of the manual;

If you want to add additional HTZSAFE sensors to the system,please operate the system according to the part 3 of the manual or contact us directly. (E-mail:contact@saferhomee.com)

1. System Components And Usage

Plug-in Receiver

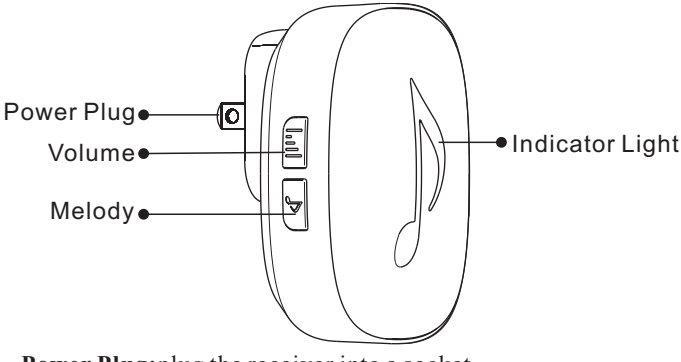

Power Plug:plug the receiver into a socket
Volume: 4 volume levels adjustable
Melody: 35 classic melodies optional
Indicator Light: flash for several seconds when the push button be activated

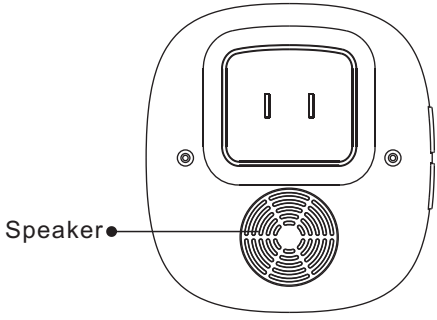

Speaker:sound for several seconds when the push button be activated

Wireless Push Button

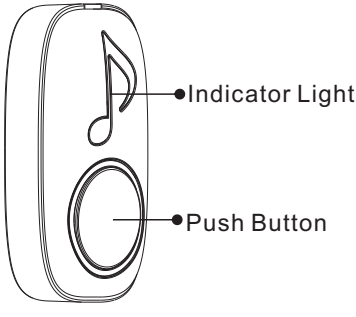

Indicator Light: flash once each time the push button be activated;
Push Button: Press to activate

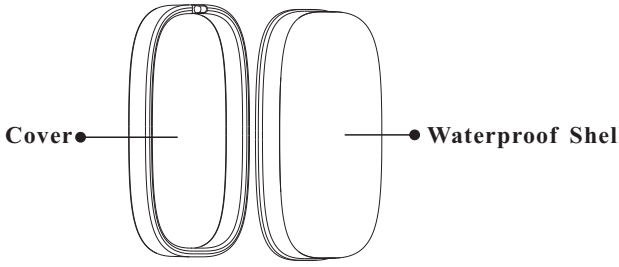

Waterproof Shell and Cover:put the shell on the button and then use the cover to fixed.

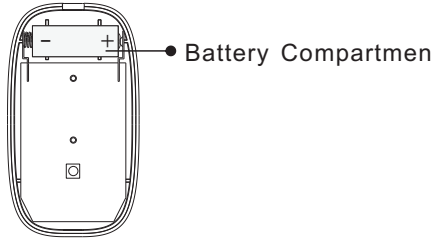

Battery Compartment: 1 pieces 12V 23A battery(included)

2. Operation Instructions

Step 1

Plug the receiver into a outlet

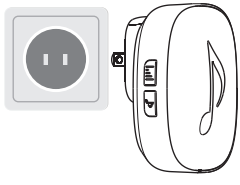

The indicator light of the receiver will flash for 15 seconds means working properly

Step2

Press the push button once

The indicator light of the button will flash once if the button be activated

Step 3

Press “Melody” once to choose the melody for this push button, total 35 melodies optional.

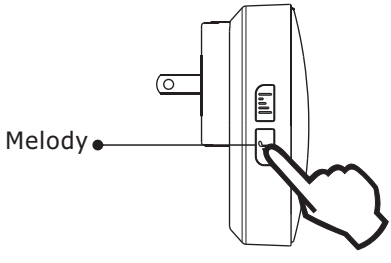

Step 4

Press the “Volume” once to adjust the volume of the receiver. (total 4 volume levels adjustable)

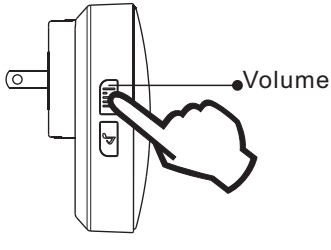

How to fix the waterproof shell to the push button

if the push button will be intalled outdoor,please fix the waterproof shell to the push button

(1)put the shell on the button

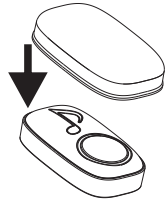

(2)use the cover to fix

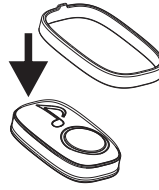

How to replace the batteries of the push button

(1)pry open the back cover by a screwdriver
(2)replace the battery(1pcs 12V 23A battery,please note the anode and cathode)
(3)put the cover back.

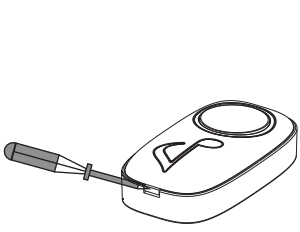

(1)

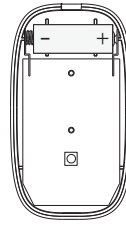

(2)

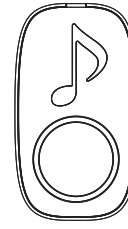

(3)

3. Other Settings

(1)How to add additional push buttons/HTZSAFE sensors to the receiver

(up to 32 push buttons/HTZSAFE Sensors can be added to 1 receiver)

Step 1

Plug the receiver into a outlet

Step 2

Press and hold the “Volume” button for 5 seconds and release the button when you heard a beep prompt and the indicator light flashing;

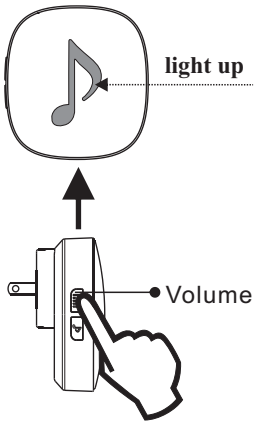

press and hold the Volume button for 5 seconds

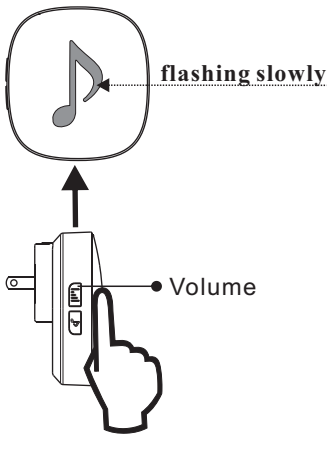

release the button

Step 3
Activate the additional push button.

Note:please make the push button close to the receiver

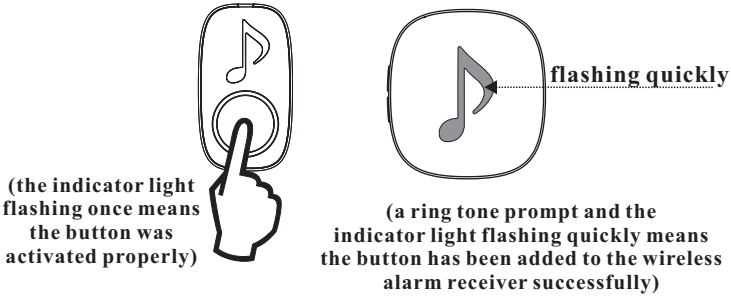

Step4
Activate the push button again to confirm it has been added to the receiver already.

Step 5
Press"Melody"button to choose the melody for this push button. total 35 melodies optional.

(2)How to delete the push buttons of the receiver

Step 1
Plug the receiver into a outlet

Step 2
Press and hold both the "Volume" button and "Melody" button for 10 secondsand release the buttons when you heard a long beep prompt;
Note: all the push buttons will be deleted by this operation.

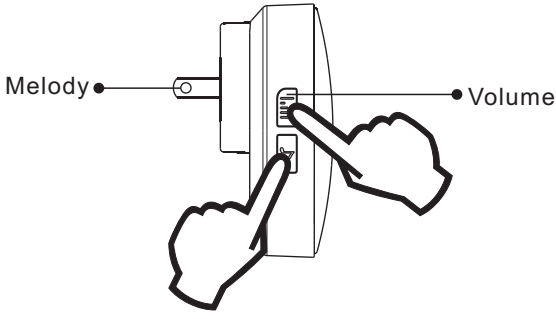

(3)How to change the melody for the push buttons

(total 35 melodies optional,match different melody with different push buttons)

Step 1

Plug the receiver into a outlet

Step 2

Activate the push button first,and then press the “Melody” button to choose the melody for this push button

Same steps for other push buttons which have been added to the receiver already.

4. Technical Parameters

Plug-in Receiver

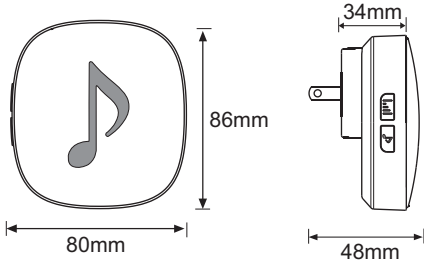

Technical parameters

Item	Technical Parameters (RX)
Working Voltage	AC 110V-220V
Working Current	Static Current 20mA; Alarming Current 300mA
Wireless Frequency	434.6MHz FSK+FHSS

Wireless Push Button

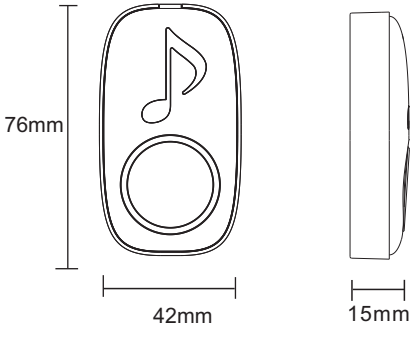

Technical parameters

Item	Technical Parameters (TX)
Wireless Transmission Range	600 Feet
Wireless Frequency	434.6MHz FSK+FHSS
Working Voltage	12V
Battery Type	1PCS 12V 23A Battery
Working Current	Static<0.1mA; Alarming<60mA
Working Temperature Range	−10℃ to 55℃

FCC Statement

This equipment has been tested and found to comply with the limits for a Class B digital device, pursuant to Part 15 of the FCC Rules. These limits are designed to provide reasonable protection against harmful interference in a residential installation. This equipment generates uses and can radiate radio frequency energy and, if not installed and used in accordance with the instructions, may cause harmful interference to radio communications. However, there is no guarantee that interference will not occur in a particular installation. If this equipment does cause harmful interference to radio or television reception, which can be determined by turning the equipment off and on, the user is encouraged to try to correct the interference by one or more of the following measures:

-- Reorient or relocate the receiving antenna.

-- Increase the separation between the equipment and receiver.

-- Connect the equipment into an outlet on a circuit different from that to which the receiver is connected.

-- Consult the dealer or an experienced radio/TV technician for help.

This device complies with part 15 of the FCC Rules. Operation is subject to the following two conditions:(1) This device may not cause harmful interference, and (2) this device must accept any interference received, including interference that may cause undesired operation.

Changes or modifications not expressly approved by the party responsible for compliance could void the user's authority to operate the equipment.