E16054
Third Edition / October 2019

ROG KUNAI GAMEPAD

(ZS660KLCL_A)
(ZS660KLCL_AD)

User Guide

E16054

October 2019
Third Edition

ROG Phone Accessory (ROG Kunai Gamepad)
Model: ZS660KLCL_A / ZS660KLCL_AD

Contents

Safety notices for your ROG Kunai Gamepad 3
Specifications summary 4
Product overview 4
Hardware features 6
Device charging 7
Device connection 7
LED indicator 12
Buttons 12
Notices 13

Safety notices for your ROG Kunai Gamepad

WARNING!

- This product should only be used in environments with ambient temperatures between 5°C (41°F) and 35°C (95°F).
- The power adapter may become warm to hot while in use. Do not cover the adapter and keep it away from your body while it is connected to a power source.
- Do not leave your ROG Kunai Gamepad connected to the power source once it is fully charged. Your ROG Kunai Gamepad is not designed to be connected to the power source for extended periods of time.

Safety notices

- Do not remove the non-detachable Li-on battery as this will void the warranty.
- Do not remove and replace the battery with a non-approved battery.
- Do not remove and soak the battery in water or any other liquid.
- Do not remove and short-circuit the battery, as it may overheat and cause a fire. Keep it away from jewelry or metal objects.
- Do not remove and dispose of the battery in fire. It could explode and release harmful substances into the environment.
- Do not remove and dispose of the battery with your regular household waste. Take it to a hazardous material collection point.

Specifications summary

Product Name	ROG Kunai Gamepad	
Platform	Android V4.0 or later	
Connection	Wired	USB Type-C
	Wireless	RF 2.4Ghz
	Bluetooth	v4.2
Dimensions	141 x 102 x 53mm	
Battery	Up to 7 hours in wireless mode	
Dongle	DC 5V (USB Type-A)	
	RF 2.4Ghz	
Package contents	2 x ROG Kunai controllers 1 x ROG Kunai holder 1 x ROG Kunai bumper 1 x Type-C to USB cable 1 x Type-C to 3.5mm audio adapter 1 x User guide 1 x Warranty card	

Product overview

ROG Kunai Gamepad is portable, providing you with both an indoor and outdoor gaming experience. To achieve this goal, we have modularized the Gamepad, and integrated the ROG series of accessories to fulfill different using scenarios.

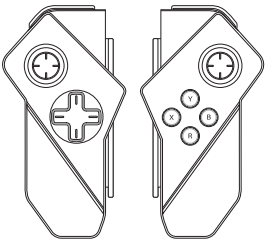 **ROG Kunai controllers**	The ROG Kunai controllers have basic action buttons and can be applied on either the ROG Kunai holder or the ROG Kunai bumper.
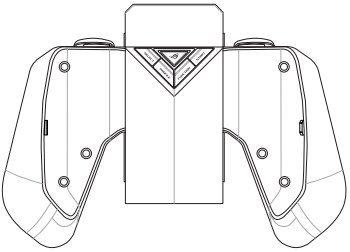 **ROG Kunai holder**	A holder, with built-in battery and RF/Bluetooth dual module, provides users not only an ergonomic feeling but multiple connection choices.
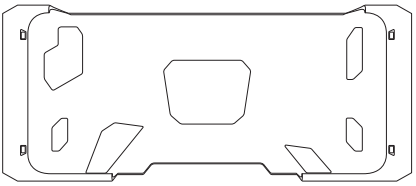 **ROG Kunai bumper**	A ROG Phone II proprietary bumper, which provides a wired connection between the mobile and ROG Kunai controllers to achieve zero latency.

Hardware features

Front view

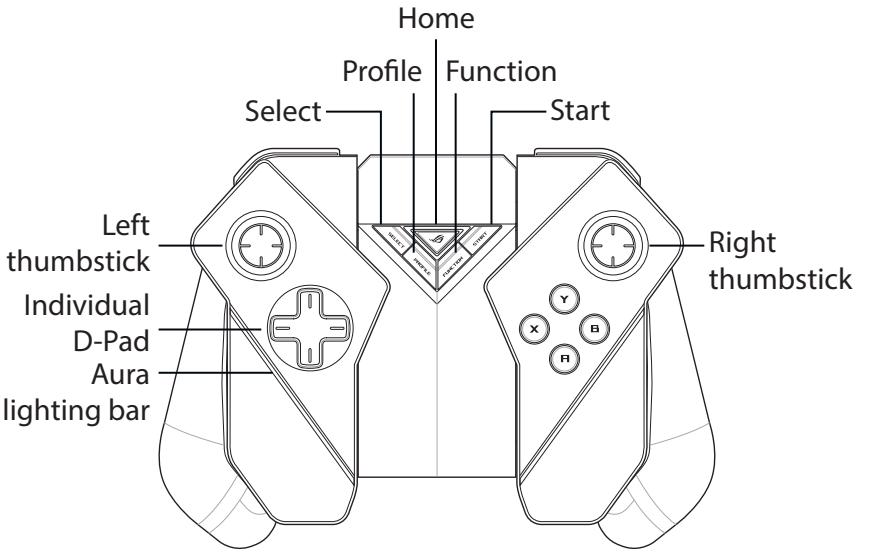

Rear view

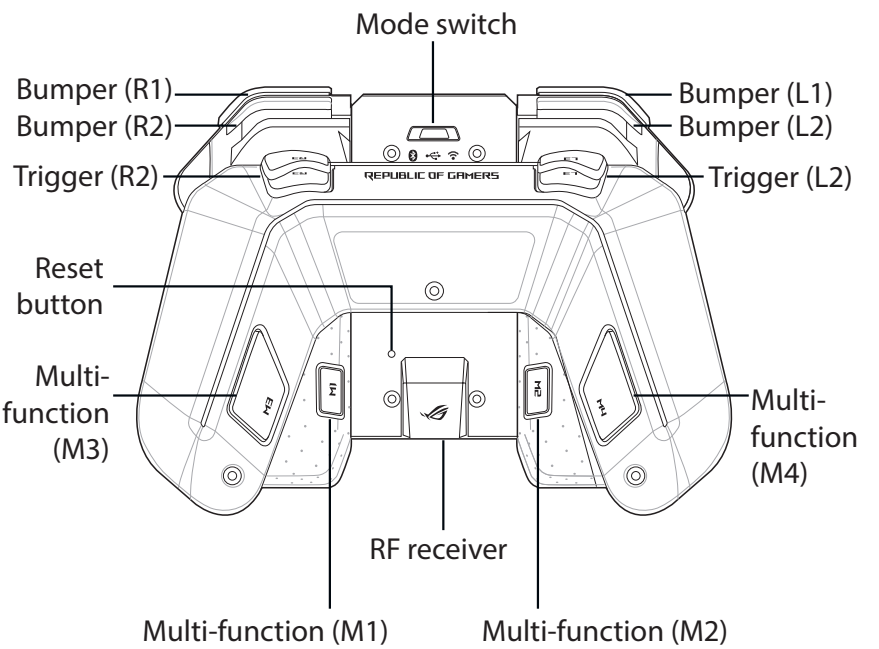

NOTE: Trigger L2(R2) and Bumper L2(R2) share the same keybind. Pressing either the Trigger or the Bumper will active the same shortcut key (L2 or R2).

Top view

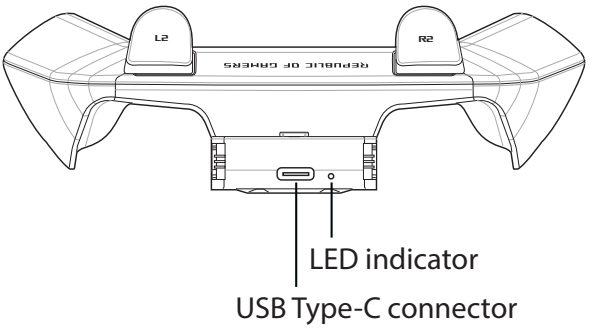

Device charging

To charge your ROG Kunai Gamepad:

1. Move the mode switch on the rear side of the ROG Kunai holder to USB.

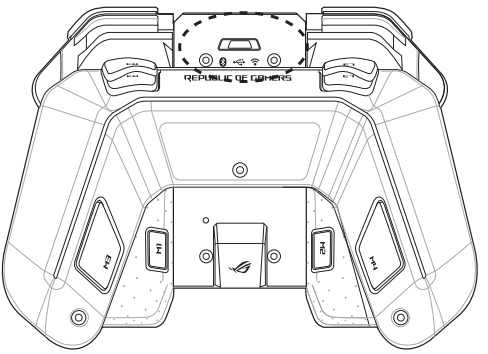

2. Connect the USB cable to your Gamepad and a PC or a power adapter.

Device connection

A. Wired connection

- Using the ROG Kunai bumper

Follow the steps below to use your phone with the ROG Kunai bumper.

1. Place your ROG Phone into the ROG Kunai bumper.

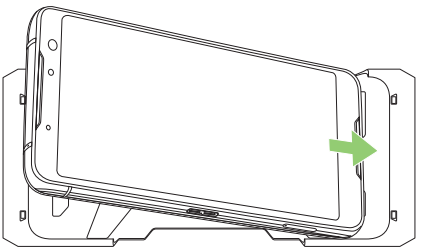

2. Slide down the ROG Kunai controllers onto the ROG Kunai bumper.

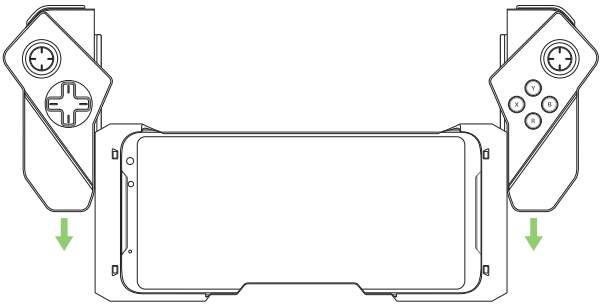

Supported

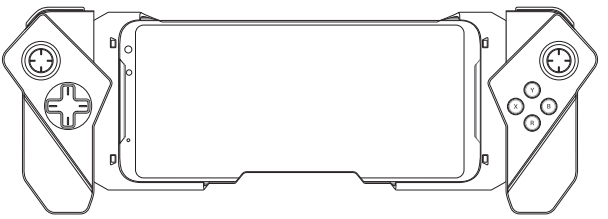

Supported

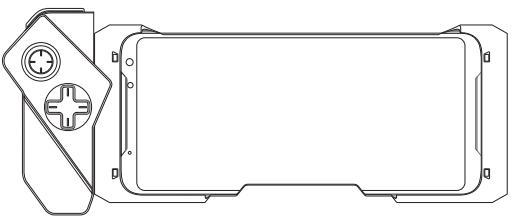

NOT supported

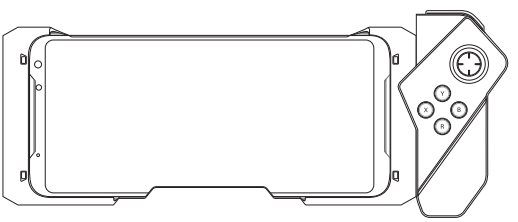

Removing the ROG Kunai bumper

Orientate the ROG Kunai bumper upright and then remove it from the upper left corner.

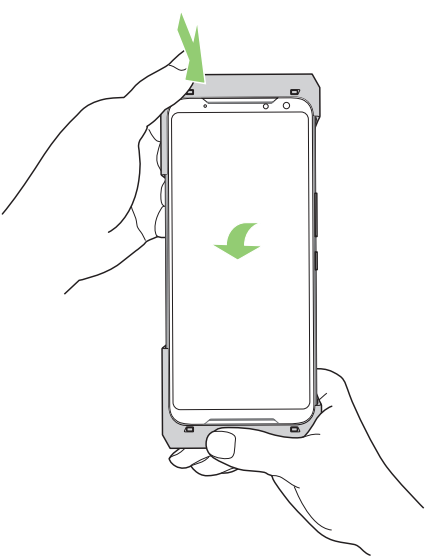

- ## Using the ROG Kunai holder

Follow the steps below to use your phone with the ROG Kunai holder.

1. Move the mode switch on the rear side of the ROG Kunai holder to USB.

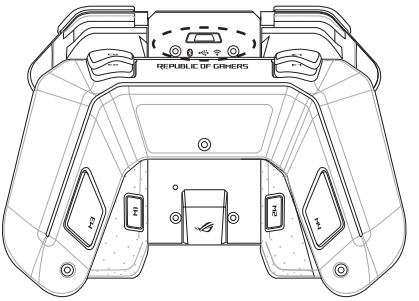

2. Slide down the ROG Kunai controllers into the ROG Kunai holder.

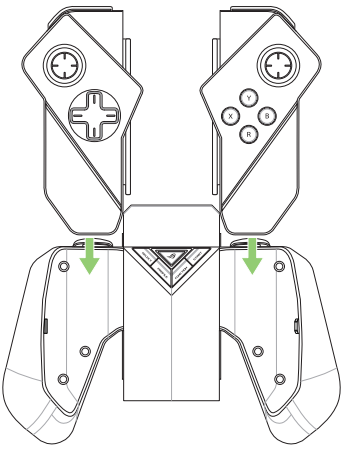

3. Plug the USB Type-C cable into your Gamepad and your USB hub, and then connect your phone to the USB hub properly.

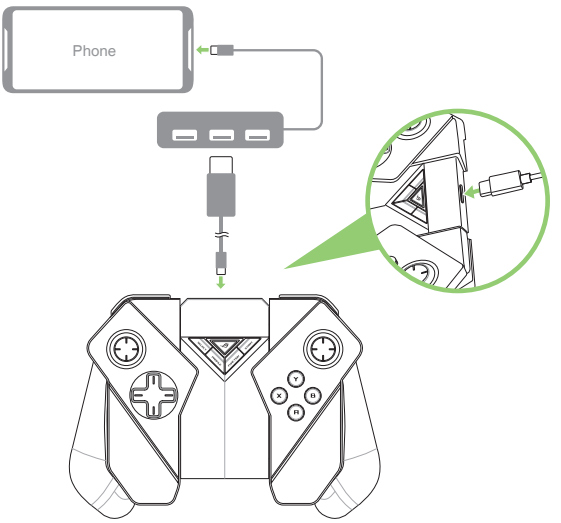

B. Wireless connection

• Via Bluetooth

Follow the steps below to connect your phone with the Gamepad via Bluetooth.

1. Move the mode switch on the rear side of the ROG Kunai holder to Bluetooth.

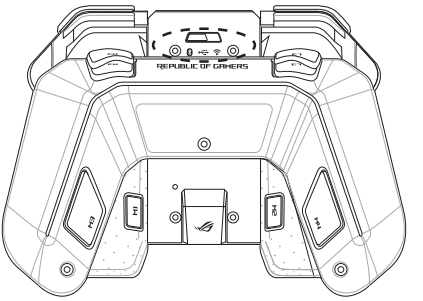

2. Slide down the ROG Kunai controllers into the ROG Kunai holder.

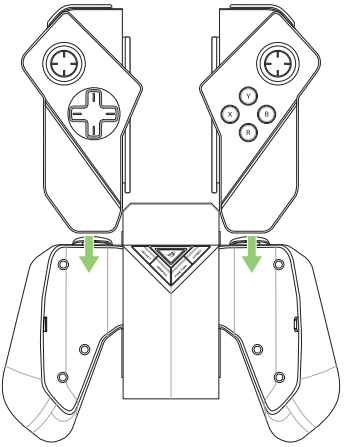

3. Press the Home button for 5 seconds until the LED indicator blinks blue to indicate that the Gamepad enters pairing mode.

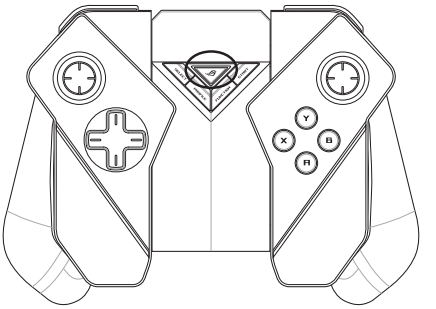

4. Turn on Bluetooth on your ROG Phone and search for Bluetooth devices.

- Via RF

Follow the steps below to connect your phone with the Gamepad via RF.

1. Move the mode switch on the rear side of the ROG Kunai holder to RF.

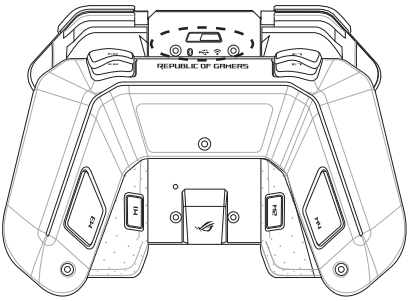

2. Slide down the ROG Kunai controllers into the ROG Kunai holder.

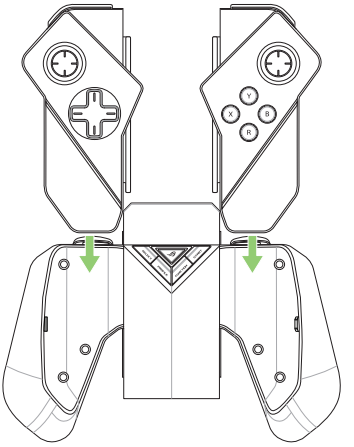

3. Plug the RF receiver into your USB hub, and then connect your phone to the USB hub properly.

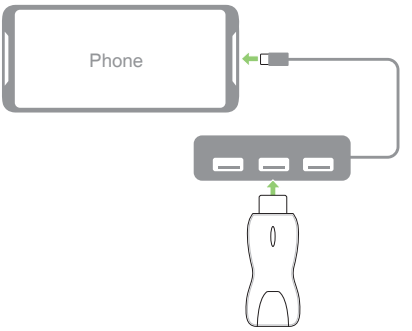

4. Press the Home button to power on your Gamepad. Then it will connect to the RF receiver automatically.

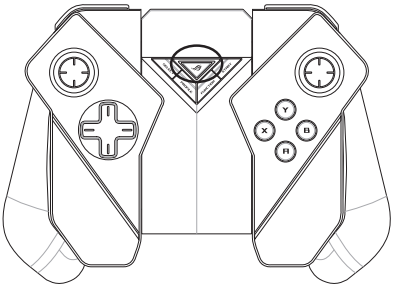

- If the LED stops blinking and turns solid, your Gamepad has been successfully connected.
- If your Gamepad fails to connect to the RF receiver, you can:

  a) Disconnect and re-plug the RF receiver.

  b) Long press the Home button to pair your Gamepad and the RF receiver again. The LED indicator will rapidly flash during this process.

LED indicator

LED color	Status
Red	0-25% charged
Yellow	25-90% charged
Green	90-100% charged
Blinking blue	Bluetooth pairing mode

Buttons

Function	Actions
Home	Press the Home button .
Back	Press the Select button .

Notices

Federal Communications Commission Statement

This device complies with Part 15 of the FCC Rules. Operation is subject to the following two conditions:

- This device may not cause harmful interference.
- This device must accept any interference received including interference that may cause undesired operation.

This equipment has been tested and found to comply with the limits for a Class B digital device, pursuant to Part 15 of the FCC Rules. These limits are designed to provide reasonable protection against harmful interference in a residential installation. This equipment generates, uses and can radiate radio frequency energy and, if not installed and used in accordance with manufacturer's instructions, may cause harmful interference to radio communications. However, there is no guarantee that interference will not occur in a particular installation. If this equipment does cause harmful interference to radio or television reception, which can be determined by turning the equipment off and on, the user is encouraged to try to correct the interference by one or more of the following measures:

- Reorient or relocate the receiving antenna.
- Increase the separation between the equipment and receiver.
- Connect the equipment to an outlet on a circuit different from that to which the receiver is connected.
- Consult the dealer or an experienced radio/TV technician for help.

CAUTION! The use of shielded cables for connection of the monitor to the graphics card is required to assure compliance with FCC regulations. Changes or modifications to this unit not expressly approved by the party responsible for compliance could void the user's authority to operate this equipment.

CE Mark Warning

English ASUSTeK Computer Inc. hereby declares that this device is in compliance with the essential requirements and other relevant provisions of related Directives. Full text of EU declaration of conformity is available at: www.asus.com/support

NCC 警語

低功率電波輻射性電機管理辦法

第十二條

型式認証合格之低功率射頻電機，非經許可，公司、商號或使用者均不得擅自變更頻率、加大功率或變更原設計之特性及功能。

第十四條

低功率射頻電機之使用不得影響飛航安全及干擾合法通信；經發現有干擾現象時，應立即停用，並改善至無干擾時方得繼續使用。前項合法通信，指依電信法規定作業之無線電通信。

低功率射頻電機須忍受合法通信或工業、科學及醫療用電波輻射性電機設備之干擾。

India RoHS

This product complies with the "India E-Waste (Management) Rules, 2016" and prohibits use of lead, mercury, hexavalent chromium, polybrominated biphenyls (PBBs) and polybrominated diphenyl ethers (PBDEs) in concentrations exceeding 0.1% by weight in homogenous materials and 0.01 % by weight in homogenous materials for cadmium, except for the exemptions listed in Schedule II of the Rule.

REPUBLIC OF
GAMERS