NOVA-TS2 User Guide

Version 1.0, August 2021

About This Manual

NOVA-TS2 is an advanced face recognition terminal that provides highly accurate face recognition in an embedded system with the built-in thermal sensor that provides elevated body temperature detection. This manual contains the descriptions and operational instructions for NOVA-TS2 device. It is intended and written for system administrators who are in charge of overall operation including installation and management. We recommend you familiarize yourself with this manual in order to make use of the product correctly and effectively.

- The figures and screenshots in this guide are given for illustration purposes only and may differ from the actual product.
- Due to continuous technological improvements, the guide may not contain the most updated information. For further information not covered in this guide, please contact us at service@cmi-tech.com.

Revision History

Version	Date	Description	Note
0.1	2021-06-18	1st draft	

(c) 2021, all rights reserved

Conventions in This Manual

The following symbols are used throughout this manual. Make sure that you fully understand the meaning of each symbol and follow the instructions accompanied.

Symbol	Name	Description
	WARNING	Indicates information that should be followed with the utmost care. Failure to comply with a warning could cause severe damage to the equipment or injury to personnel.
	CAUTION	Indicates a potentially hazardous situation which, if not avoided, could result in equipment damage, data loss, performance degradation, or unexpected results.
	IMPORTANT	Emphasizes essential information required for user success.
	NOTE	Provides important supplemental information that might enhance users' understanding or alternative steps to accomplish their goals.
	TIP	Provides optional information to help users be more successful in their tasks.

(c) 2021, all rights reserved

Safety Instructions

Follow the safety instructions to use the product safely and prevent any risk of personal injury or damage to the product.

WARNING

Choosing Location

- DO NOT expose the product to direct sunlight, excess heat, open flames, corrosive gasses, moisture, or dust. Doing so may cause electrical shock, electrical short, or fire.
- DO NOT install the product near heaters, air conditioners, electrical fans, refrigerators, or water. Doing so may create the risk of a short circuit or fire caused by water or condensation that may come into contact with the product.
- DO NOT install the product in an environment that is susceptible to explosion.

Operation

- DO NOT let any type of liquid, mists, or sprays get into the product. Doing so may cause electrical shock, electrical short, or product damage.
- If smoke, odors or noise rise from the device, stop using the device immediately, disconnect the power cable, and contact our customer support.

Maintenance

- DO NOT attempt to dissemble, repair, or modify the device yourself. Opening or removing covers may expose you to electrical shock or other risks and may void your warranty. If the product does not work correctly, contact your dealer or our customer support.

CAUTION

Choosing Location

- Keep the front side of the device away from strong ambient light, direct sunlight, or both. Sunlight, halogen lamps or other strong illumination may degrade the performance of the device, that is, increase in failure-to-capture rates or occasional authentication problem.
- DO NOT install the product outdoors unless environmental factors such as water, temperature, or sunlight in the location are controlled by means of proper protection.
- DO NOT expose the product to high electro-magnetic radiation. Device failure or performance degradation may occur caused by electro-magnetic interference.
- DO NOT install the product next to devices that contain magnets or generate magnetic fields such as speakers. Device malfunction or performance degradation may occur caused by magnetic interference.

(c) 2021, all rights reserved

Installation

- DO NOT install the product on a surface subject to vibration or physical shock. Doing so can cause damage to the product.
- When you install the product on a wall, make sure that you secure the product with the provided fasteners. Dropping from the wall may cause damage to device casing, internal parts, or both.
- DO NOT install the power supply cable in a high-traffic area where people pass by. Doing so may create a trip hazard and cause the cable to become worn or frayed.
- Use only a power cord set complying with the national regulation of the countries intended for sale.
- Use only the power adapter which is either provided or approved by CMITECH for the product to operate properly and safely.
- DO NOT connect multiple devices to one power adapter. Overload on power adapter may cause over-heat or fire hazard.
- DO NOT use any type of extension cord to connect the product to a power supply.

Operation

- DO NOT use any sharp tools when pressing the buttons to prevent damage to the touch screen from scratches or cuts.

Maintenance

- When cleaning the product, wipe the product with a soft and dry cloth. Do not apply water, benzene, alcohol, or spray cleaner. These may cause product failure or fire.

(c) 2021, all rights reserved

Contents

About This Manual . . . ii
Revision History . . . ii
Conventions in This Manual . . . iii
Safety Instructions . . . iv
1. Introduction to NOVA-TS2 . . . 1
1.1. Features . . . 1
1.2. Components . . . 2
1.3. Operating Description . . . 4
1.3.1. Block Diagram . . . 4
1.3.2. Schematics . . . 6
2. Installing NOVA-TS2 . . . 8
2.1. Installation Requirements . . . 8
2.1.1. Environmental Requirements . . . 8
2.1.2. Electrical Requirements . . . 9
2.1.3. Tool Requirements . . . 10
2.2. Installation Procedure . . . 11
2.2.1. Mounting Device (Wall Mount) . . . 11
2.2.2. Mounting Device (Gang Box Mount) . . . 13
2.2.3. Connecting Cables . . . 14
3. Using NOVA-TS2 . . . 19
3.1. Enrollment . . . 19
3.2. Authentication . . . 20
4. Product Specifications . . . 22
4.1. Mechanical Specifications . . . 22
4.1.1. Dimensions (unit: mm) . . . 22
4.2. Technical Specifications . . . 23
4.2.1. Face recognition terminal . . . 23
4.2.2. Thermal Sensor . . . 24
4.2.3. Cables and Connectors . . . 25
4.3. Environmental Specifications . . . 26
Appendix A: OSD Menu List . . . 27
A.1. User . . . 27
A.2. Device . . . 27
A.3. Communication . . . 29
A.4. Display . . . 30
A.5. Authentication . . . 30

(c) 2021, all rights reserved

A.6. Log 31
Appendix B: Legal Information 32
B.1. Disclaimer 32
B.2. Copyright Notice 33
Appendix C: Regulatory Information 34
C.1. Certification and Safety Approvals FCC Compliance Statement 34
Appendix D: Contact Information 35

(c) 2021, all rights reserved

1. Introduction to NOVA-TS2

NOVA-TS2 is a face recognition terminal that provides face recognition in an embedded system with real-time subject finding and local authentication for high throughput access control and time & attendance applications. The built-in thermal sensor provides infrared imaging technology for detecting elevated human body temperature.

1.1. Features

The key features of NOVA-TS2 are shown in the following table:

Feature	Description
Advanced real time subject tracking with simple user instructions	NOVA-TS2 accurately locates the subject face in real time and tracks in 2 sides of angle to provides wider and deeper positioning.
Wide angle face imaging for outstanding capture volume	Allows height range of 145 to 210 cm
Utilization of ultra-high performance face matching engines	Advanced, dedicated co-processor allows utilization of latest and most powerful face algorithms.
Supplemental display of authorization results	Can display authorization decision when coupled to access control provisioning logic so that “subject recognized, but not granted permission” information can be displayed.
Supports multiple languages in GUI	English, Korean, Simplified Chinese, Traditional Chinese, Japanese, Arabic, Spanish, Italian, Turkish, French
Large on-board (embedded) face template database	Store up to 20,000 active face templates on-board in 1:1 recognition (verification) identification mode. Store up to 20,000 active face templates on-board in 1:N identification mode.
High speed face matching	Can provide up to 20,000 matches per second on-board.
Use in widest range of lighting conditions	Embedded illuminators in both white and NIR ranges expand use in adverse ambient light environments.
Standard multi-band RFID reader	MiFare, DesFire, FeliCa card support with standard embedded ISO/IEC 14443 reader.
Full range of deployment options	Standard connections in include selectable Wiegand IN or OUT, GPI, RS 485, and contact relay.
Fully compatibility with CMITech CMID Manager v2 access control and T&A solution software	Supports full integration with CMID Manager for distributed access control and T&A solutions on single network.
Body temperature screening	Detects elevated skin temperature using infrared thermography against a probable fever.

(c) 2021, all rights reserved

Feature	Description
A variety of access control options	Combined with temperature screening and mask detection, Nova-TS allows for a different level of access depending on the application such as a thermal bypass mode without authentication or a mask-wearer-only mode.

1.2. Components

Before you begin, make sure that all the following items are included with your device. If you find anything is missing, contact your dealer.

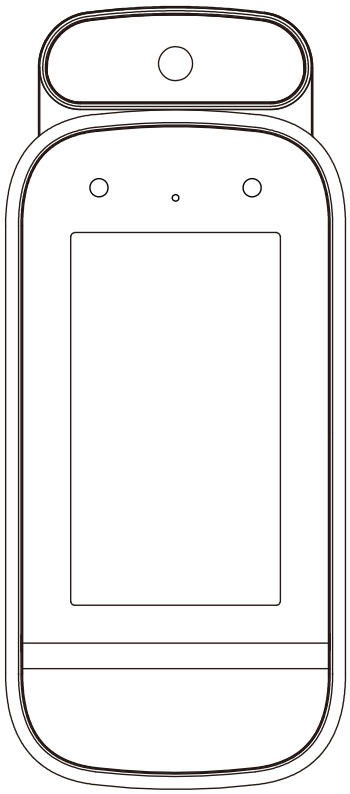

NOVA-TS2

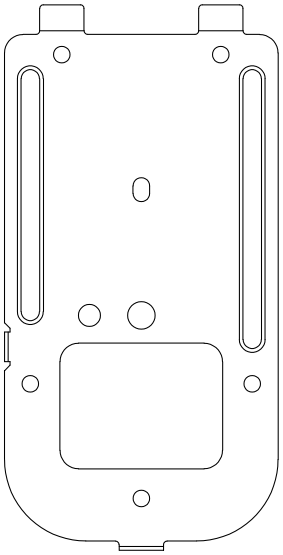

Mounting Plate

Quick Guide

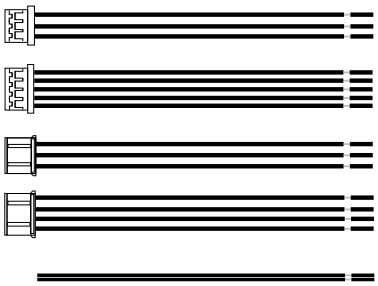

Cables

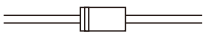

Diode

(c) 2021, all rights reserved

Table 1. NOVA-TS2 component table

Name	Quantity	Description	Note
NOVA-TS2	1	Face recognition terminal	
Mounting Plate	1	Installs the unit on a wall or on an outlet box	
Quick Guide	1	Gives brief instructions and information needed for product use and installation	
Diode	1	Prevents currents in unintended directions (See Relay Connection for an example of its use)	
Cables: Power cable	1		
Cables: Relay cable	1		
Cables: GPI cable	1		
Cables: Wiegand cable	1		
Cables: RS-485 cable	1		
AC adapter	1	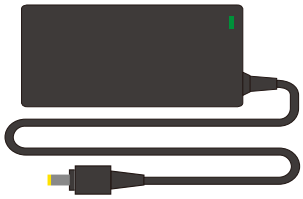	Output: 15VDC, 3.0A
Power code (optional)	1	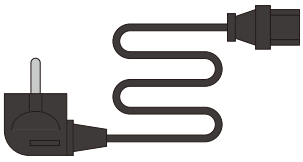	

(c) 2021, all rights reserved

2. Installing NOVA-TS2

This chapter gives the information about the requirements and the prerequisites for installing NOVA-TS2 and the installation procedures.

2.1. Installation Requirements

Before installation, make sure that the following requirements are met.

2.1.1. Environmental Requirements

The NOVA-TS2 is designed and intended for indoor use only. The device is not weatherproof and must not be exposed to water, ice, extreme temperatures or other adverse weather conditions. If it is required to use the device in outdoor or extreme environments, contact local sales or service@cmi-tech.com for more information.

☑ Avoid the location that is exposed to backlight, direct sunlight, and other strong illumination.

☑ Choose the location with moderate ambient light.

Environmental requirements

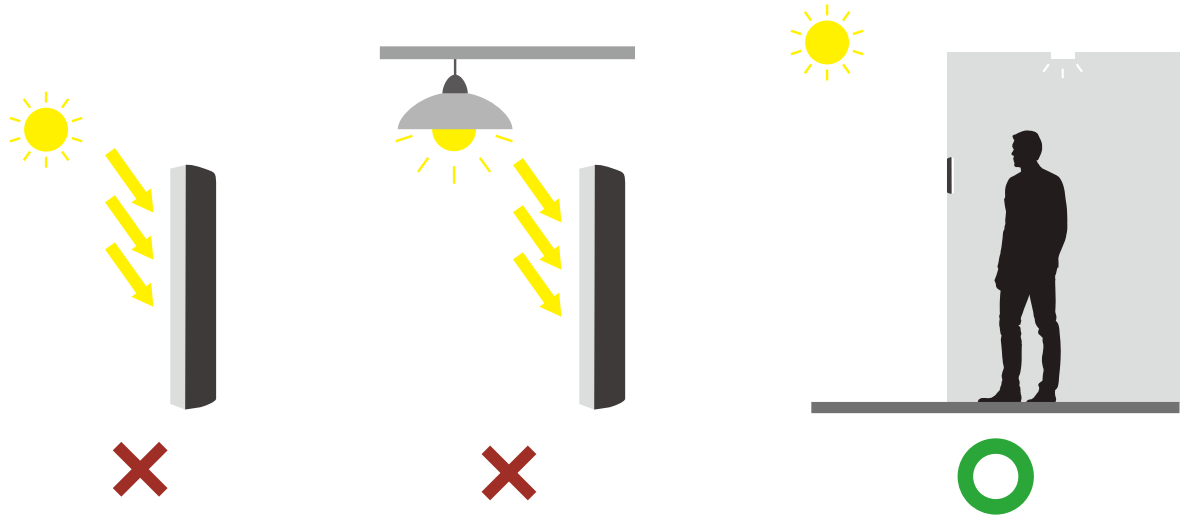

☑ Determine the height at which you install the device.

The recommended mounting height is 135 cm (53 inches) from the floor to the bottom of the device. It covers a person's height from 140 cm (55 inches) up to 190 cm (75 inches) at the distance of 55 cm (22 inches) from the device.

(c) 2021, all rights reserved

Recommended mounting height

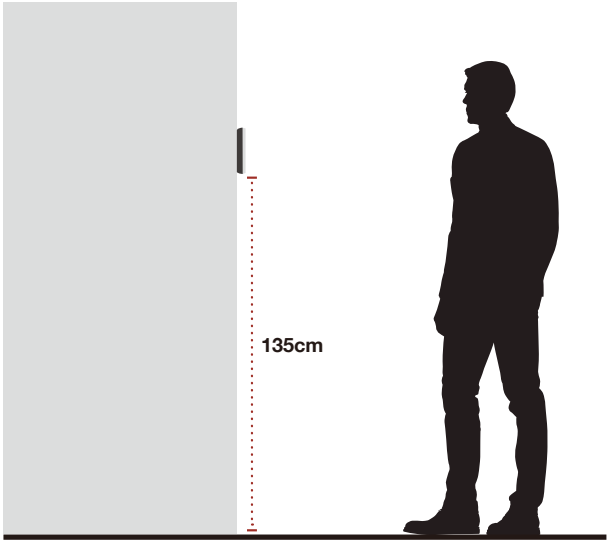

Default

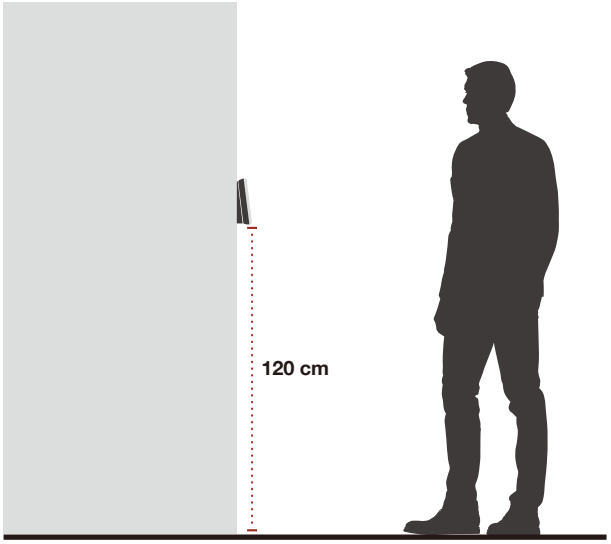

Mounting b racket (optional)

2.1.2. Electrical Requirements

- ☑ Use a stable power supply adapter of DC 15V (± 5%) with a minimum 2A.
- ☑ Make sure that the power cable is as short as possible and have correct wire gauge (22 AWG or smaller in number)
- ☑ Use CAT5 or later for ethernet cable.

Table 2. Power requirements depending on cable length and wire gauge

Input voltage (V)	**Wire gauge** (AWG)	**Power cable length** (m)		**Note**
		Recommended	**Maximum**	
12	16	26.3	37.9	
	18	15.9	23.8	
	20	10.0	15.0	
	22	6.3	9.4	
15	20	25.0	37.5	*Standard Configuration*
	22	15.7	23.6	
24	20	70.1	105.1	
	22	44.0	66.0	

(c) 2021, all rights reserved

2.1.3. Tool Requirements

The following tools can be necessary for installation and are not supplied by default.

Table 3. Required tools

Purpose	Name	Figure	Note
General	Screw driver		Cross head
	Tape ruler	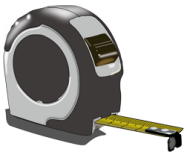	For measuring the installation height
	Cutting plier	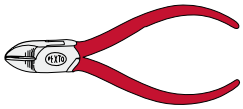	
Concrete wall mount	Electric drill		With a drill bit and anchor bolts
	Marker		
	Hammer		

(c) 2021, all rights reserved

2.2. Installation Procedure

2.2.1. Mounting Device (Wall Mount)

You can install the device onto a wall directly by using the mounting plate.

1. Remove the screw that attaches NovaFace to the mounting plate and disassemble the plate.

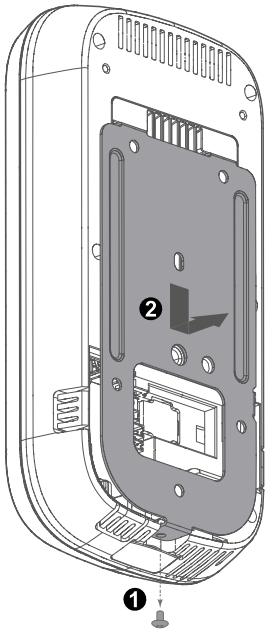

Keep the screw because it will be used to attach them again.

2. Put the mounting plate at the predetermined position and attach the plate onto the wall with the screws (M4 x 8).

Wall mounting points

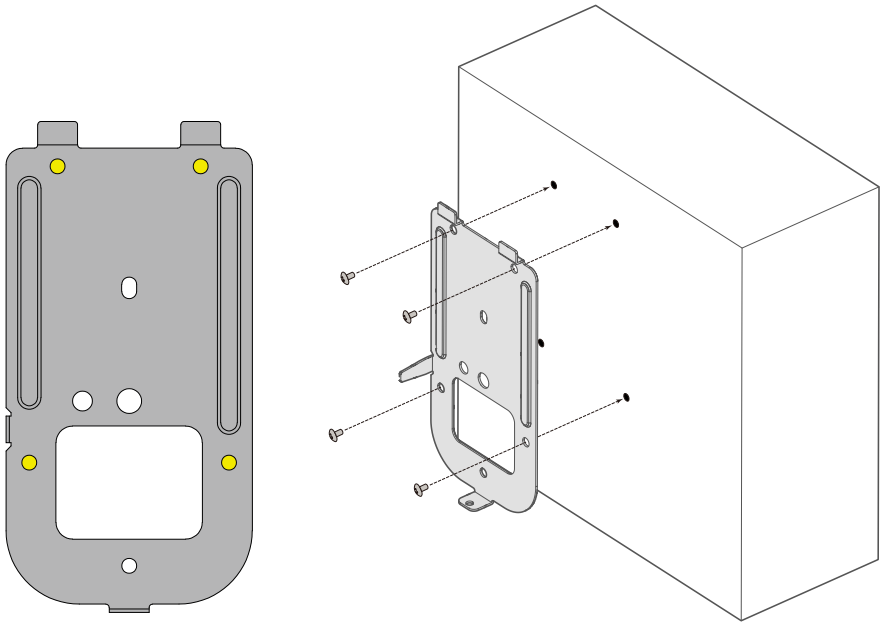

(c) 2021, all rights reserved

For concrete wall mount, do the steps that follow:

1. Put marks on the wall through the holes of plate by using a marker.
2. Drill the marked points by using a electric drill.
3. Attach the anchor bolts to the holes by using a hammer.
4. Attach the plate to the wall with the screws.

3. Connect the power cable and peripherals cables, if necessary, to the connectors in the rear panel. (See Connecting Cables for more information)
4. Remove one or more plastic tabs to allow the wire routing and let the cables go through the openings.

Removable tabs

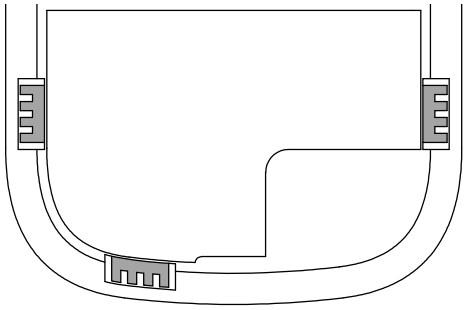

5. Put the device onto the installed plate, slide it downward, and attach them with the screw (M3 x 6)

(c) 2021, all rights reserved

2.2.2. Mounting Device (Gang Box Mount)

You can also install the device on a gang box (outlet box) by using the mounting plate.

1. Remove the screw that attaches NovaFace to the mounting plate and disassemble them.

   Keep the screw because it will be used to attach them again.

2. Put the mounting plate onto the gang box and attach it to the box with the screws (M4 x 8).

   Gang box mounting points

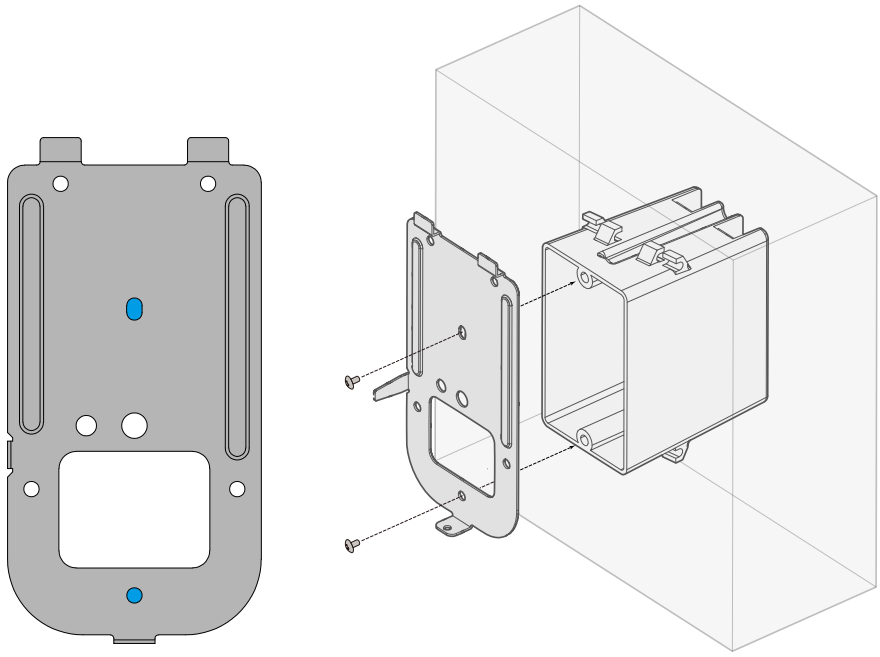

   Make sure that the outgoing cables from the gang box go through the rectangular opening in the plate.

3. Connect the power cable and peripherals cables, if necessary, to the connectors in the rear panel. (See Connecting Cables for more information)
4. Put the device onto the installed plate, slide it downward, and assemble them with the screw (M3 x 6)

(c) 2021, all rights reserved

2.2.3. Connecting Cables

Power Connection

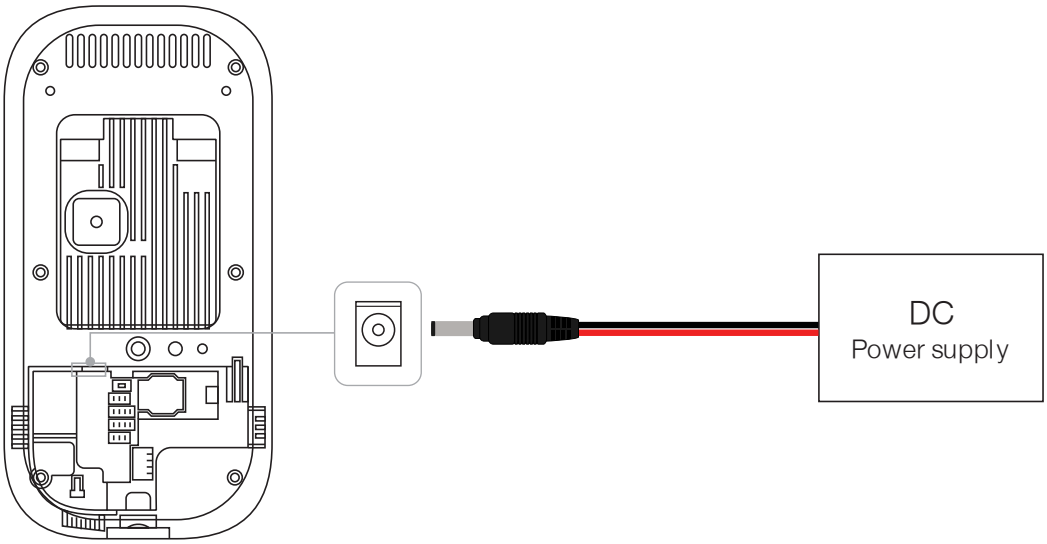

Network Connection

RJ-45 connector for 10/100/1000Base-T Ethernet communication, minimum CAT5 cable.

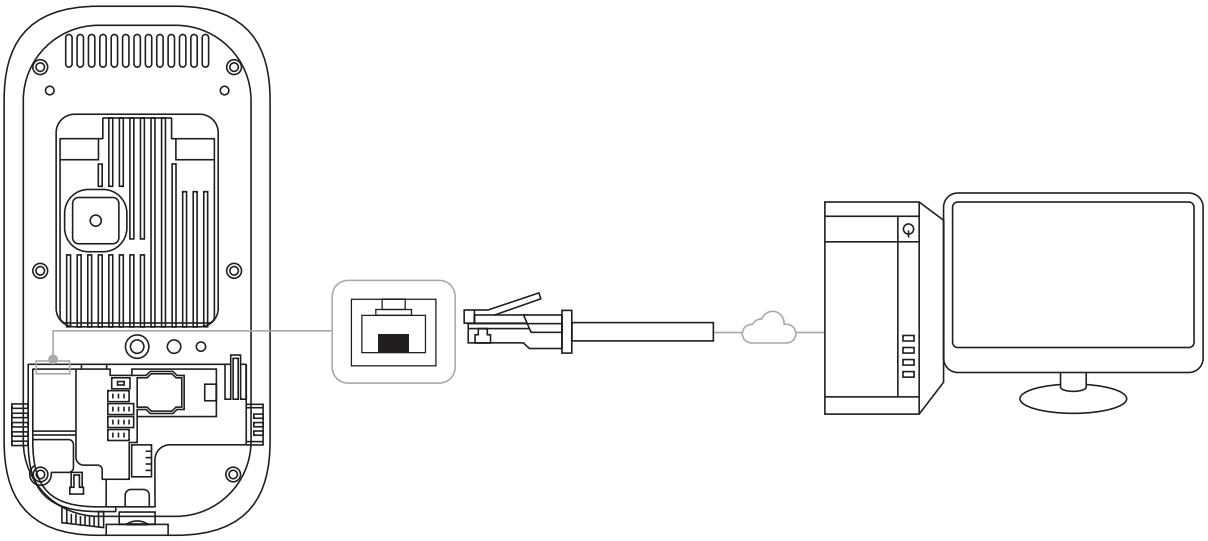

(c) 2021, all rights reserved

Relay Connection – Dead-Bolt Type Door Lock

There are two types of dead-bolt door lock connections and configuration supported – fail-safe and fail-secure.

- Use different power supplies for the NovaFace and the door lock.
- Install the diode at both ends of the circuit as shown in the figure below close to the door lock to protect the relay contact from the reverse current that occurs when the door lock works.
- Make sure that the diode direction is correct.

Fail-Safe Configuration

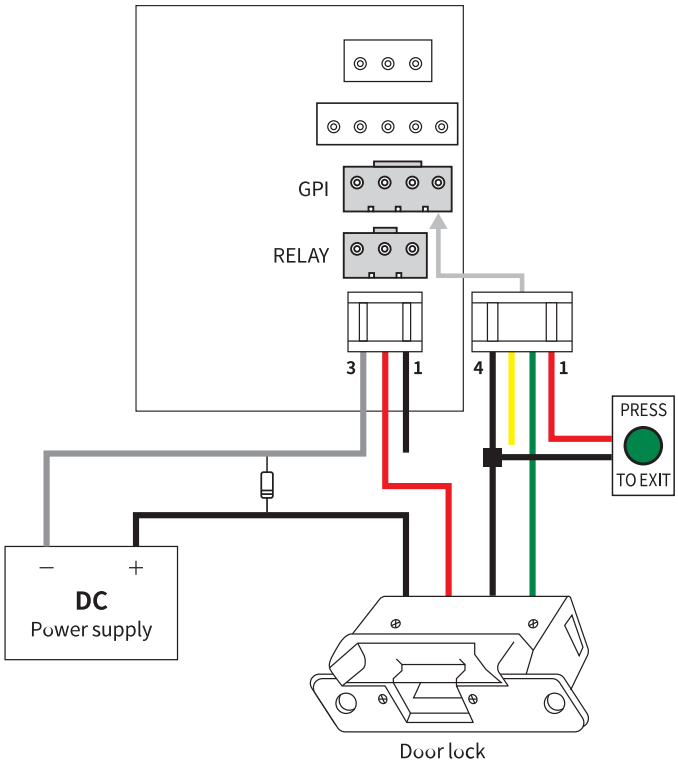

	Pin No.	Name
RELAY	1	Normal Open (NO)
	2	Common (COM)
	3	Normal Close (NC)
GPI	1	GPI 0
	2	GPI 1
	3	GPI 2
	4	Ground (GND)

(c) 2021, all rights reserved

Fail-Secure Configuration

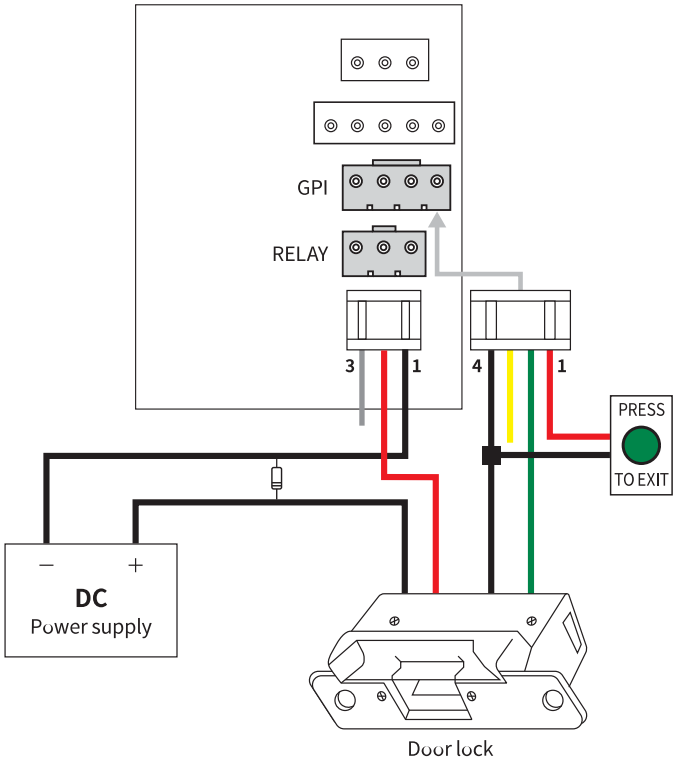

	Pin No.	Name
RELAY	1	Normal Open (NO)
	2	Common (COM)
	3	Normal Close (NC)
GPI	1	GPI 0
	2	GPI 1
	3	GPI 2
	4	Ground (GND)

Relay Connection – Automatic Door

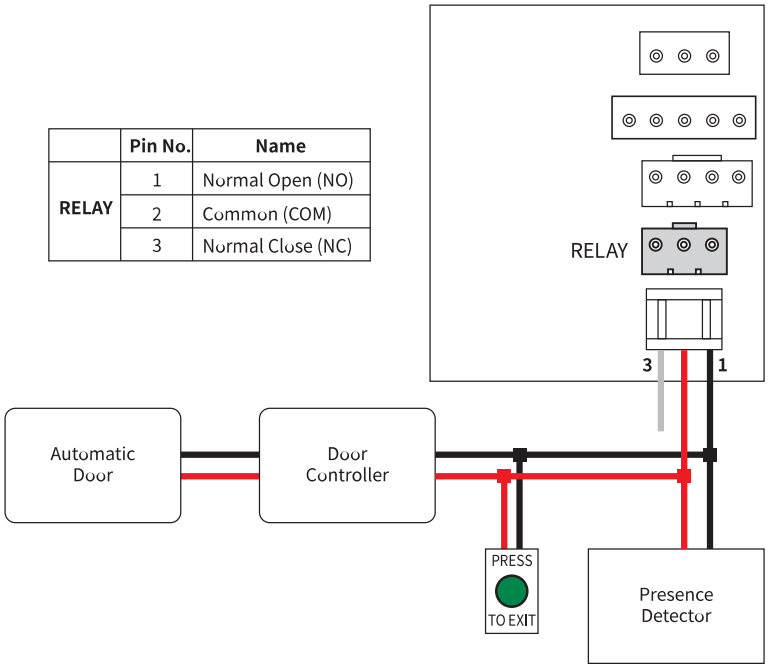

	Pin No.	Name
RELAY	1	Normal Open (NO)
	2	Common (COM)
	3	Normal Close (NC)

(c) 2021, all rights reserved

Relay Connection – Alarm Light

Internal relay interface with nominal switching capacity of 1 A, 30 VDC or 0.3 A, 120 VAC, resistive load.

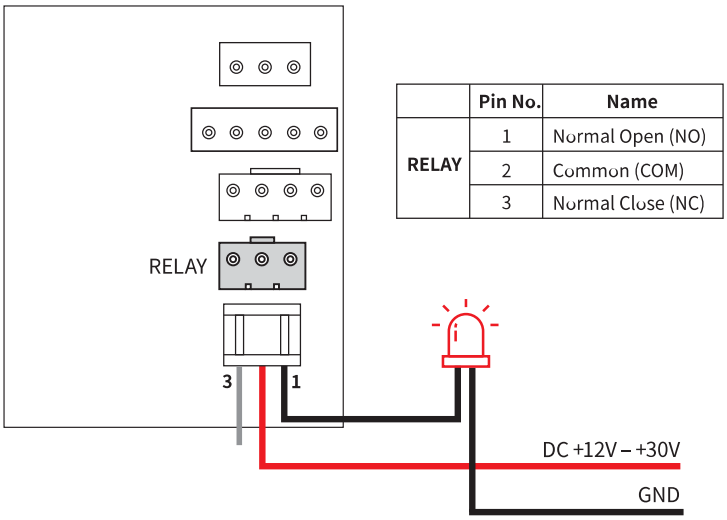

	Pin No.	Name
RELAY	1	Normal Open (NO)
	2	Common (COM)
	3	Normal Close (NC)

GPI Connection

	Pin No.	Name
GPI	1	GPI 0
	2	GPI 1
	3	GPI 2
	4	Ground (GND)

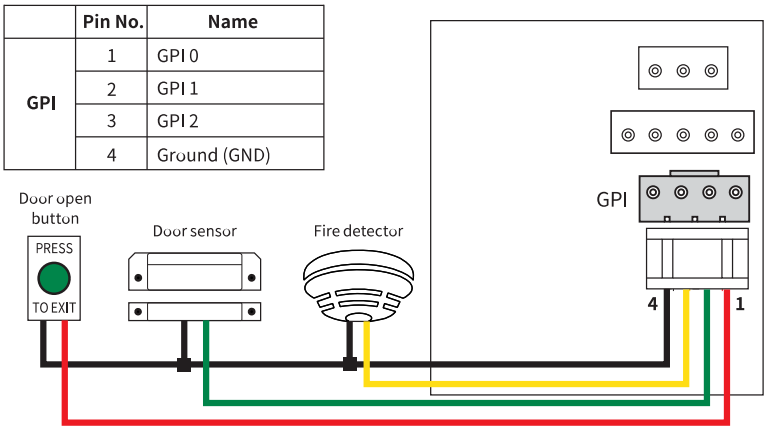

(c) 2021, all rights reserved

Wiegand IN Connection

	Pin No.	Name
Wiegand	1	IN DATA 0
	2	IN DATA 1
	3	OUT DATA 0
	4	OUT DATA 1
	5	Ground (GND)

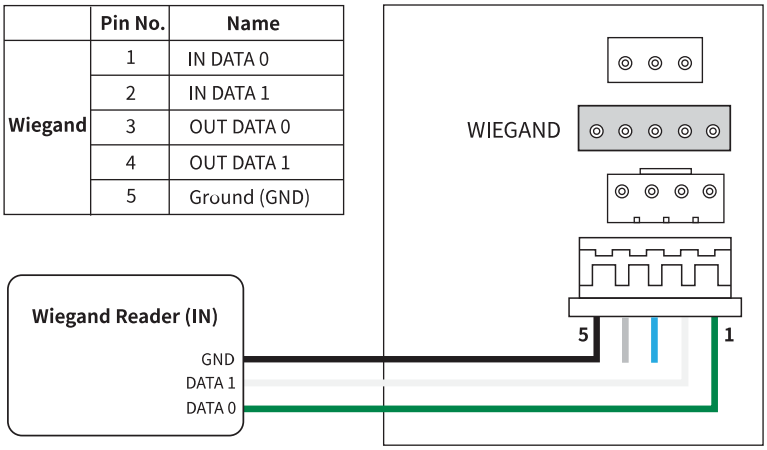

Wiegand OUT Connection

	Pin No.	Name
Wiegand	1	IN DATA 0
	2	IN DATA 1
	3	OUT DATA 0
	4	OUT DATA 1
	5	Ground (GND)

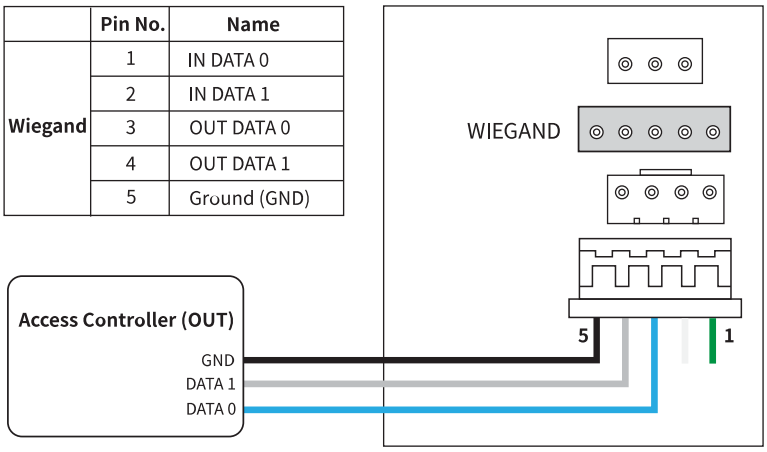

(c) 2021, all rights reserved

3. Using NOVA-TS2

3.1. Enrollment

This section gives the procedural information to enroll users to the device.

1. Press the User button ( ) on the main screen.
2. Press **Enroll** (Enroll) in the bottom.
3. Type **ID** and **Name**.
4. Press one or more credential type buttons (Face, Card) to add to the user.
   - For **Face**, let the user stand in front of device and complete the face capture.
   - For **Card**, put the card on the device's card reader. When the CSN (card serial number) appears on the screen, press **OK**.

> Optionally, select **Bypass card** to allow the user to get access permission by using a registered card alone regardless of authentication mode

5. Press **OK** to complete the enrollment.

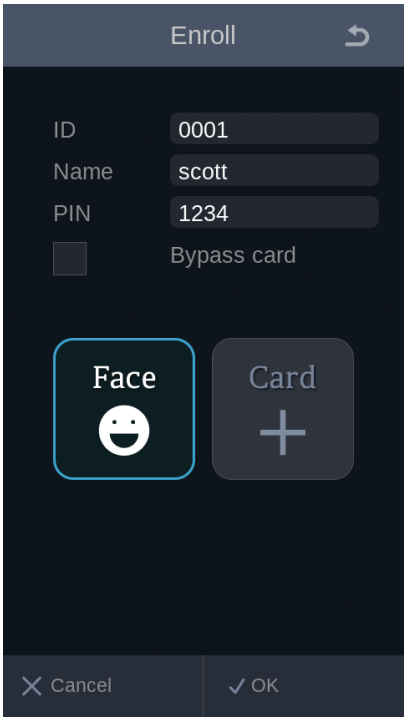

(c) 2021, all rights reserved

3.2. Authentication

NOVA-TS2 detects and displays the subject's face over 2.0 meters from the system on the high-resolution color display. The subject will simple and naturally walk toward the face capture range of 0.4 to 2.0 meter. Once the system recognizes the subject, the result will be displayed immediately with indication line over the subject's face image.

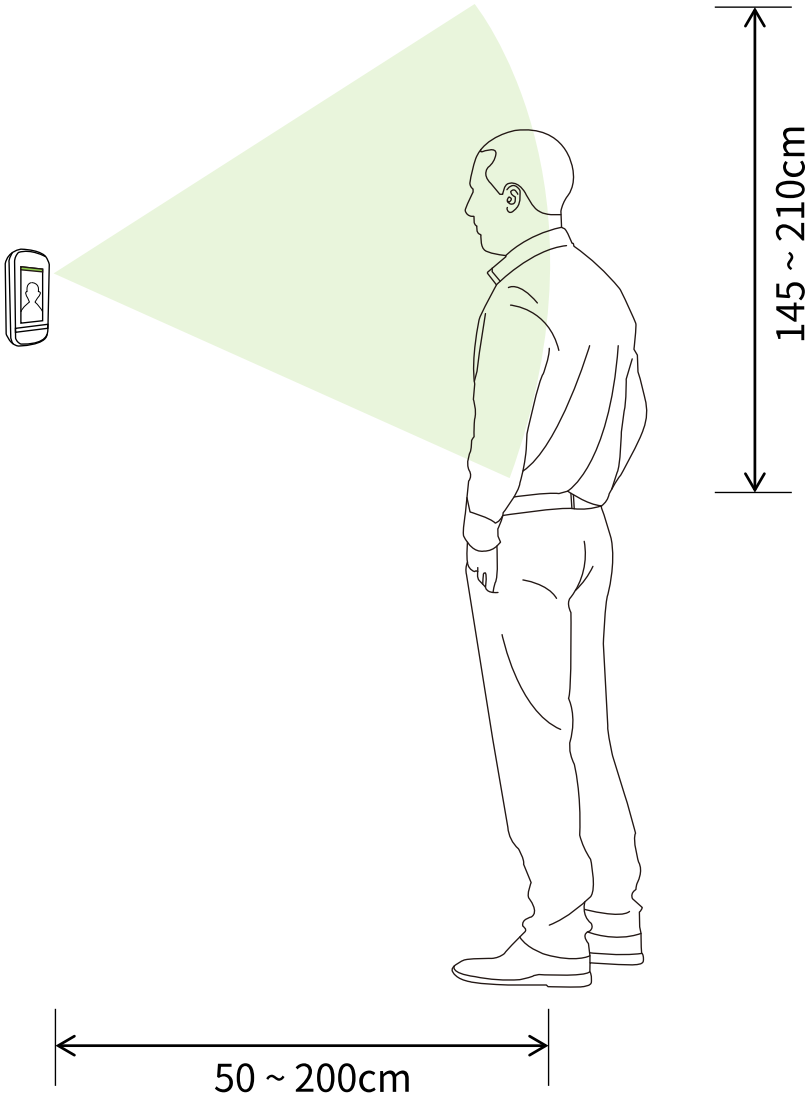

Figure 1. Authentication overview

(c) 2021, all rights reserved

1. Go near and look at the device. White box appears around the face when your face is detected.

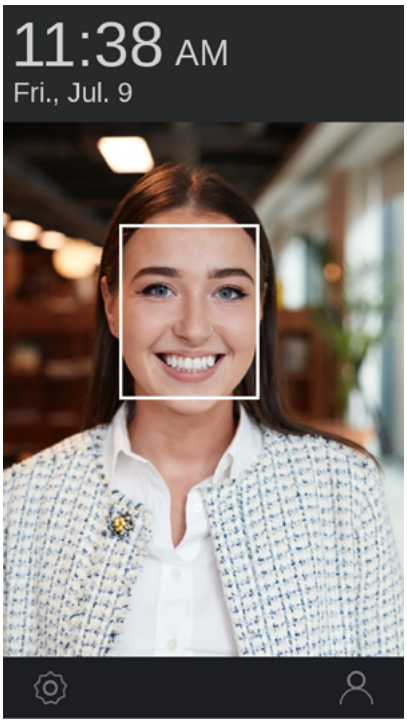

2. Authentication result is displayed on the top of the screen depending on whether your face is recognized successfully.

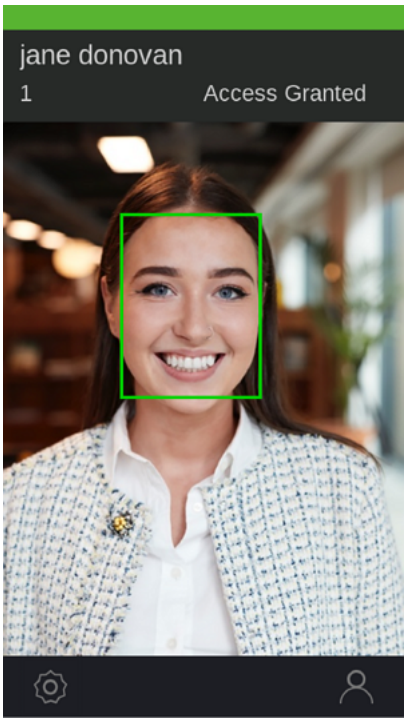

(c) 2021, all rights reserved

4. Product Specifications

4.1. Mechanical Specifications

4.1.1. Dimensions (unit: mm)

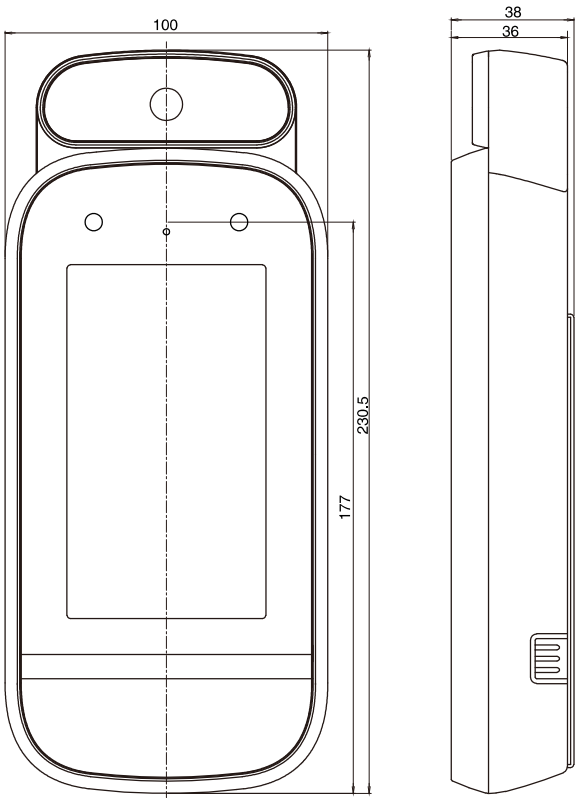

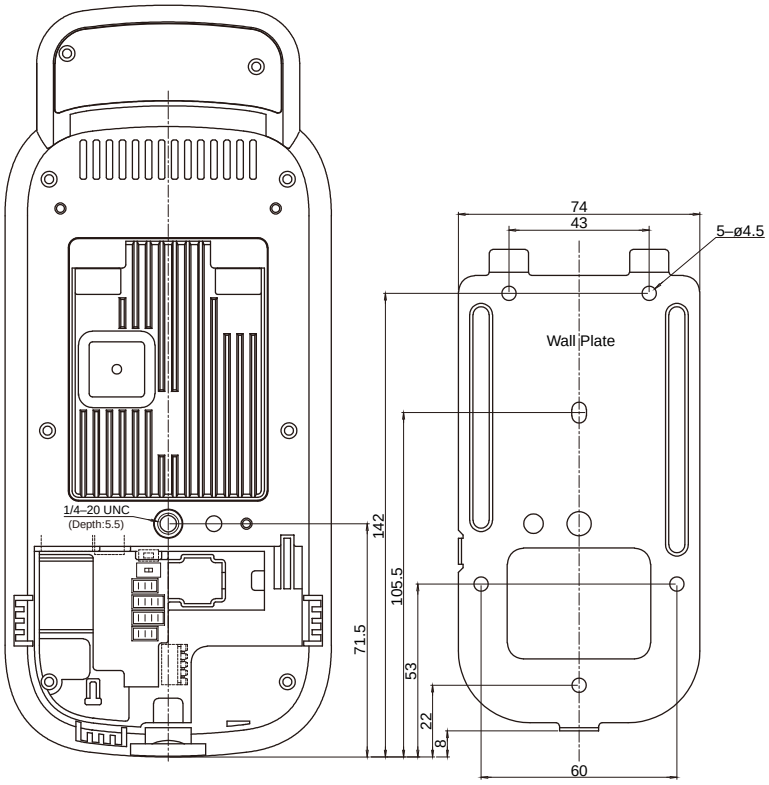

(c) 2021, all rights reserved

4.2. Technical Specifications

4.2.1. Face recognition terminal

	Item	Description
Face recognition system	CPU	ARM Cortex A53 OctaCore (8 core) operating at 1.4GHz
	Memory	2GB RAM, 8GB Flash
	Number of cameras	Two
	Display	5” LCD with touch
	IR LED	YES, for low ambient light levels and supplementary face detection support
	White LED	YES, for adjunct lighting of face
	Ethernet	Standard 10/100 BaseT and GigE
	Dimensions	100 x 200 x 36 mm
	Weight	450 g (1 pounds)
	Capture range	40 cm - 200 cm
	User’s height range	145 cm - 210 cm (with system installed at 135 cm)
	Enrollment speed	About 5 seconds
	Recognition speed	About 1 second total in 1:N mode with 20,000 subjects in local database
	Enrollment	20,000 users total DB size(Max 20,000 users in 1:N mode)
	Fake face detection	YES
	Temperature range	-20°C - 45°C, operating
	Audio	YES (Speaker only)
	Power	DC 15V
	RF Card reader	ISO/IEC 14443 reader for MiFare, DesFire and FeliCa cards. standard
	Connections	RJ45 for LAN, Wiegand IN/OUT, GPIO (3), RS485, dry contact relay, SIM Socket (optional)
	USB	Only for host / service modes

(c) 2021, all rights reserved

4.2.2. Thermal Sensor

Item	Description
Thermal sensitivity	± 0.5 deg. C)
Initial temperature stabilization time	120 minutes (only once at set up or system turn-on)
Alarm setting	Configurable setting of alarm value above baseline temperature
Thermal imaging	Process displayed on LCD
Certifications	CE, FCC, KC
Operating temperature range	15 to 35 deg C Measuring the temperature out of this range may compromise the accuracy)

(c) 2021, all rights reserved

4.2.3. Cables and Connectors

Relay

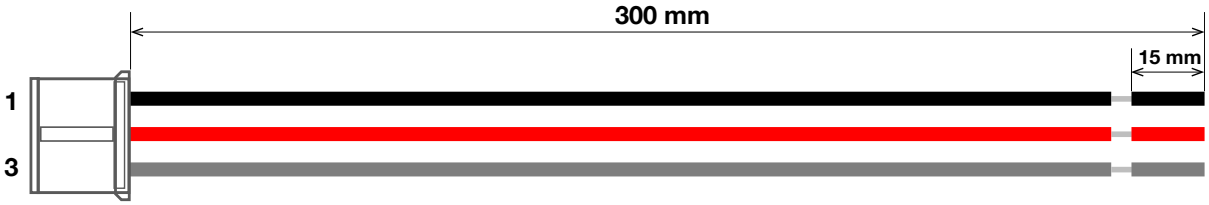

Pin	Name	Color	Wire Gauge
1	Normal Open (NO)	Black	24 AWG
2	Common (COM)	Red	
3	Normal Close (NC)	Gray	

GPI

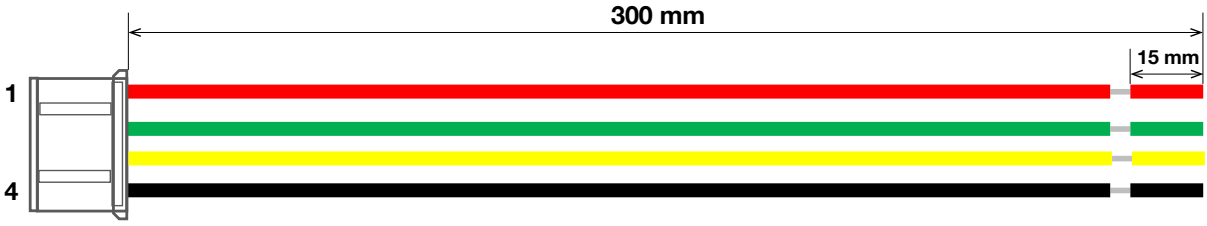

Pin	Name	Color	Wire Gauge
1	GPI 0	Red	24 AWG
2	GPI 1	Green	
3	GPI 2	Yellow	
4	Ground (GND)	Black	

RS-485

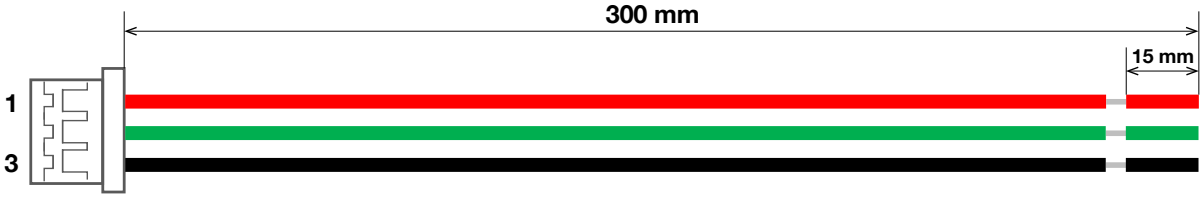

Pin	Name	Color	Wire Gauge
1	DATA (-)	Red	24 AWG
2	DATA (+)	Green	
3	Ground (GND)	Black	

(c) 2021, all rights reserved

Wiegand IN/OUT

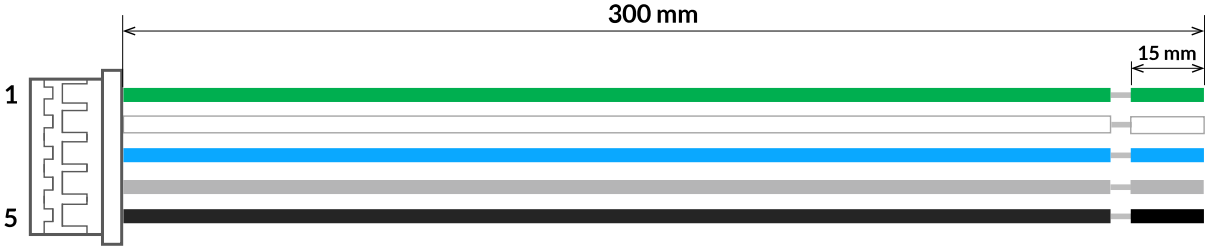

Pin	Name	Color	Wire Gauge
1	IN DATA 0	Green	
2	IN DATA 1	White	
3	OUT DATA 0	Blue	24 AWG
4	OUT DATA 1	Gray	
5	Ground (GND)	Black	

Power

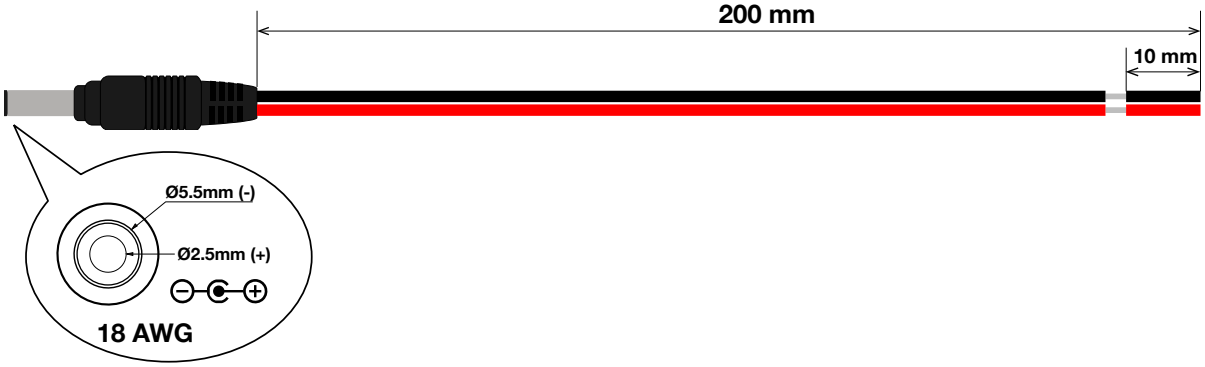

4.3. Environmental Specifications

Item		Description	Note
Temperature	Operating	5°C to 35°C (40°F to 95°F)	
	Non-operating	-40°C to 60°C (-40°F to 140°F)	
Humidity	Operating	8% to 85% relative humidity, non-condensing	
	Non-operating	8% to 90% relative humidity, non-condensing	

(c) 2021, all rights reserved

Appendix A: OSD Menu List

This appendix gives the details about advanced setting menus of NovaFace device that appears when you press the **Gear** button ( ) on the main screen.

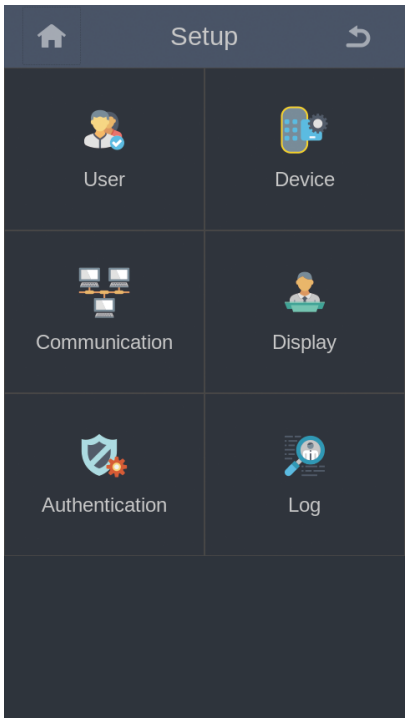

A.1. User

Name	Description
Enroll	Starts user enrollment
Delete	Deletes users
Modify	Edits user information by pressing an registered user
Search	Finds users by ID

A.2. Device

Name		Description
Bio	Fake face	Selects a fake face detect option (**Not used**, **Level low**, **Level high**)
	Use mask	Selects whether to use mask detection
	Mask alarm	Selects the type of action that the device should take when no mask is detected (**Not used**, **Warning message**, **Access deny**)
	Face image log	Selects whether to show face image on event log

(c) 2021, all rights reserved

Name		Description
Sound	Speaker volume	Adjusts the speaker volume
Date/Time	Time settings	Configures device date and time
Door	Relay	Selects whether to use relay
	Open duration	Configures time duration for door open relay
	Use exit	Selects a GPI port number connected to exit door button (**Not used**, **GPI Port 1**, **GPI Port 2**, **GPI Port 3**)
	Exit type	Selects contact state of the GPI port that exit door button uses (**NC**, **NO**)
	Use alarm	Selects a GPI port number connected to alarm sensor (**Not used**, **GPI Port 1**, **GPI Port 2**, **GPI Port 3**)
	Alarm type	Selects contact state of the GPI port that alarm sensor uses (**NC**, **NO**)
	Use sensor	Selects a GPI port number connected to sensor (**Not used**, **GPI Port 1**, **GPI Port 2**, **GPI Port 3**)
	Sensor type	Selects contact state of the GPI port that sensor uses (**NC**, **NO**)
Tamper	Mode	Selects a tamper protection mode (**Not used**, **Beep mode**, **Secure mode**) If you select **Secure mode**, all the data and settings are deleted permanently in device when a physical tampering is attempted.
Device info	Device name	Configures the device name
	Model	Shows the model name
	FW version	Shows the device firmware version
	APP version	Shows the application version
	MAC	Shows the MAC address
	S/N	Shows the serial number
	IOMicom version	Shows the IO Micom revision number
	H/W version	Shows the hardware revision number
	RFMicom version	Shows the RF Micom revision number
	Algo version	Shows the algorithm revision number

(c) 2021, all rights reserved

Name		Description
Database	User import	Imports the user database from connected USB drive
	User export	Exports the user database to connected USB drive
	Debug export	Exports the debug data to connected USB drive
LED signal		Configures LED signal through EF-IO (*Under development*)
Camera	Camera mode	Configures the power supply frequency of an electric light where the camera is used (**50Hz**, **60Hz**)
Reset	Device reboot	Restarts device
	Factory reset	Resets all configuration settings and deletes all user data
	Reset all config	Sets all configuration settings to default
	Reset all users	Deletes all user data
Thermal sensor	Use sensor	Selects whether to use thermal sensor
	Temperature unit	Selects temperature scale (**Celsius**, **Fahrenheit**)
	Alarm temperature	Configures elevated temperature alarm threshold
	Alarm low temperature	Configures low temperature alarm threshold
	Alarm action	Selects the type of action that the device should take when high temperature is detected (**Not used**, **Warning message**, **Access deny**)
	Offset	Calibrates temperature offset value

A.3. Communication

Name		Description
TCP/IP	User DHCP	Selects whether to use DHCP
	IP	Shows the device's IP address
	Subnet	Shows the subnet mask
	Gateway	Shows the gateway address
	DNS 1	Shows the DNS #1
	DNS 2	Shows the DNS #2

(c) 2021, all rights reserved

Name		Description
Server	User server	Selects whether to use server
	Server IP	Types the server's IP address
	Port	Types the server's port number
	Commute Uri	Type server URI to receive T&A event logs from device
	Sync Uri	Type server URI to receive T&A event logs backed up by device while server is offline
	Accept Uri	Type server URI where device sends request to check periodically if server is online
Serial		Configures the serial communication settings (*Under development*)

A.4. Display

Name	Description
Language	Selects a display language
Time display	Selects time notation between 12-hour and 24-hour clock format (**12 Hours**, **24 Hours**)
Menu timeout	Select timeout for auto exit from menu display after leaving it untouched
Screensaver	Selects whether to use screensaver

A.5. Authentication

Name		Description
Auth mode	Mode	Selects a authentication mode (**Face only**, **Face or card**, **Face and PIN**, **Card and face**, **Card an PIN**)
	Bypass	Allows unregistered users to access
	Mask reject	Denies access if wearing a mask is deteced
	Touch start	Starts recognition by touching the screen
	Recog threshold	Adjusts match threshold
		Increasing the value increases FRR(false rejection rate) whereas descreasing the value increases FAR(false acceptance rate).
TA	Use T&A	Selects whether to use T&A

(c) 2021, all rights reserved

Name		Description
Admin password	Use admin password	Selects whether to use admin password
	Password	Types admin password
Card	Use CSN	Selects whether to use card serial number
	CSN order	Selects CSN order on card reading (**MSB**, **LSB**)
Wiegand	Output type	Selects Wiegand output type (**Wiegand**, **Card**, **ID**)

A.6. Log

Name		Description
Log info	Total used	Shows the used space for logs in percent
	Total count	Show the total count of logs
Log delete	Delete log	Deletes all the logs

(c) 2021, all rights reserved

Appendix B: Legal Information

B.1. Disclaimer

The words of which the initial letter is capitalized have meanings defined under the following conditions. The following definitions shall have the same meaning regardless of whether they appear in singular or in plural.

For the purposes of this Disclaimer:

- **Company** (referred to as either "the Company", "We", "Us" or "Our" in this Disclaimer) refers to CMITech Co. Ltd.
- **You** means the individual accessing the Product, or the company, or other legal entity on behalf of which such individual is accessing or using the Product, as applicable.
- **Product** means the electronic device provided by the Company named NovaFace and its manual.

The information contained on the Product is for general information purposes only. The Company assumes no responsibility for errors or omissions in the contents of the Product. In no event shall the Company be liable for any special, direct, indirect, consequential, or incidental damages or any damages whatsoever, whether in an action of contract, negligence or other tort, arising out of or in connection with the use of the Product or the contents of the Product. The Company reserves the right to make additions, deletions, or modifications to the contents on the Product at any time without prior notice.

The Product may contain links to external websites that are not provided or maintained by or in any way affiliated with the Company. Please note that the Company does not guarantee the accuracy, relevance, timeliness, or completeness of any information on these external websites.

The information given by the Product is for general guidance on matters of interest only. Even if the Company takes every precaution to insure that the content of the Product is both current and accurate, errors can occur. Plus, given the changing nature of laws, rules and regulations, there may be delays, omissions or inaccuracies in the information contained on the Product. The Company is not responsible for any errors or omissions, or for the results obtained from the use of this information.

All information in the Product is provided "as is", with no guarantee of completeness, accuracy, timeliness or of the results obtained from the use of this information, and without warranty of any kind, express or implied, including, but not limited to warranties of performance, merchantability and fitness for a particular purpose. The Company will not be liable to You or anyone else for any decision made or action taken in reliance on the information given by the Product or for any consequential, special or similar damages, even if advised of the possibility of such damages.

(c) 2021, all rights reserved

B.2. Copyright Notice

All rights reserved. This documentation is copyrighted by CMITech Co., Ltd. No part of this guide may be reproduced, transmitted, or transcribed without the expressed written permission from CMITech Co., Ltd. All other product names, trademarks, or registered trademarks are property of their respective owners.

We reserve the right to make any alterations which may be required due to technical improvement. For the most current information, contact your CMITech representative.

Appendix C: Regulatory Information

C.1. Certification and Safety Approvals FCC Compliance Statement

This device complies with part 15 of the FCC rules. Operation is subject to the following two conditions: (1) This device may not cause harmful interference, and (2) This device must accept any interference received, including interference that may cause undesired operation.

changes or modifications not expressly approved by the party responsible for compliance could void the user's authority to operate the equipment.

This equipment has been tested and found to comply with the limits for a Class B digital device pursuant to part 15 of the FCC rules. These limits are designed to provide reasonable protection against harmful interference in a residential installation. This equipment generates, uses and can radiate radio frequency energy and, if not installed and used in accordance with the instructions, may cause harmful interference to radio communications. However, there is no guarantee that interference will not occur in a particular installation. If this equipment does cause harmful interference to radio or television reception, which can be determined by turning the equipment on and off, the user is encouraged to try to correct the interference by one or more of the following measures: -Reorient or relocate the receiving antennae -Increase the separation between the equipment and the receiver -Connect the equipment into an outlet on a circuit different from that to which the receiver is connected. -Consult the dealer or an experienced radio/TV technician for help.

FCC RF Exposure Statement This equipment complies with FCC radiation exposure limits set forth for an uncontrolled environment. End users must follow the specific operating instructions for satisfying RF exposure compliance. The antenna used for this transmitter must not transmit simultaneously with any other antenna or transmitter, except in accordance with FCC multi-transmitter product procedures

(c) 2021, all rights reserved

Appendix D: Contact Information

CMITech Company, Ltd.

5F, 38, Burim-ro 170beon-gil, Dongan-gu, Anyang-si, Gyeonggi-do, 14055, Republic of Korea

Tel: +82-70-8633-8278

Fax: +82-31-624-4490

Contact: sales@cmi-tech.com

CMITech America, Inc.

2033 Gateway Place, Suite 500

San Jose, CA 95110 USA

Tel: (1) 408 573-6930

(c) 2021, all rights reserved