SIM7600NA-H,SIM7600NA-H miniPCIE_User Manual

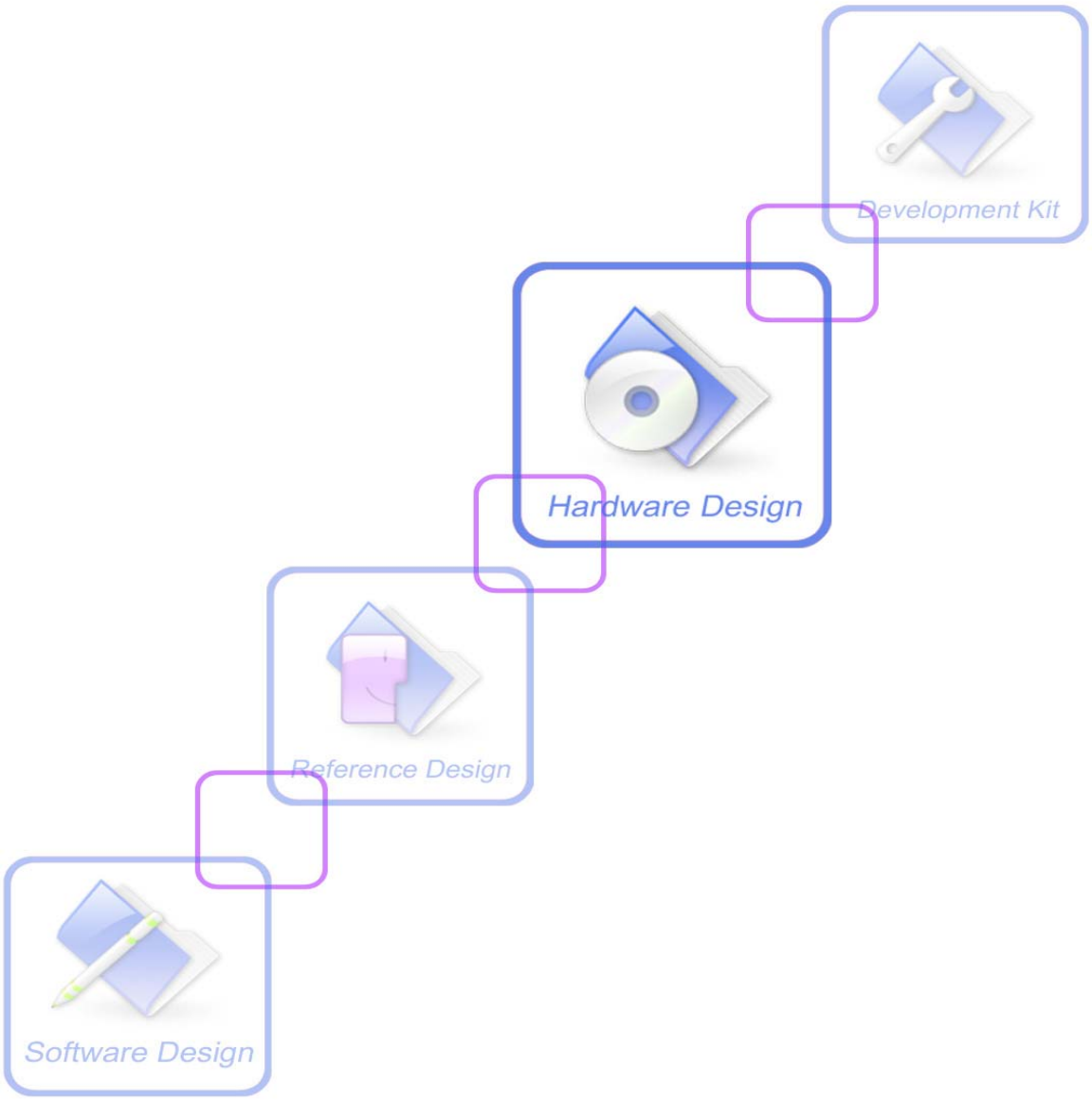

Document Title	SIM7600NA-H,SIM7600NA-H miniPCIE_user manual
Version	1.00
Date	2020-1-7
Status	Released
Document Control ID	SIM7600NA-H,SIM7600NA-H miniPCIE _user manual _V1.00

General Notes

SIMCom offers this information as a service to its users to support the application and engineering efforts that use the products designed by SIMCom. The information provided is based on the requirements specifically from the users. SIMCom has not undertaken any independent search for additional relevant information, including any information that may be in the user's possession. Furthermore, the system validation of the product designed by SIMCom within a larger electronic system remains the responsibility of the user or the user's system integrator. All specifications supplied herein are subject to change without notice.

IC Caution:

This device complies with Industry Canada licence-exempt RSS standard(s). Operation is subject to the following two conditions:

(1) This device may not cause interference, and

(2) This device must accept any interference, including interference that may cause undesired operation of the device.

Le présent appareil est conforme aux CNR d'Industrie Canada applicables aux appareils radio exempts de licence. L'exploitation est autorisée aux deux conditions suivantes:

(1) l'appareil ne doit pas produire de brouillage, et

(2) l'utilisateur de l'appareil doit accepter tout brouillage radioélectrique subi, même si le brouillage est susceptible d'en compromettre le fonctionnement

This equipment complies with ISED radiation exposure limits set forth for an uncontrolled environment. This equipment should be installed and operated with minimum distance 20cm between the radiator & your body.

Ce matériel est complété par une exposition de rayonnements IC pour un environnement naturel. Ce matériel doit être installé et se faire avec une distance minimale de 20cm entre les radiateurs et les autresYour body shop.

For a host manufacture's using a certified modular, if (1) the module's IC number is not visible when installed in the host, or (2) if the host is marketed so that end users do not have straightforward commonly used methods for access to remove the module so that the IC number of the module is visible; then an additional permanent label referring to the enclosed module: "Contains Transmitter Module IC: 23761-8PYA006" or "Contains IC: 23761-8PYA006" must be used.

This radio transmitter IC: 23761-8PYA006 has been approved by Imovation,Science and Economic Development Canada to operate with the antenna types listed below,with the maximm permissible gain indicated.Antenna types not included in this list that have gain greater than the maximm gain indicated for any type listed are strictly prohibilted for use with this device.

Antenna List:
Type: Dipole antenna with non-standard SMA connector(50ohm)
Model: MF25D
Antenna Gain: Band 2:1.87dBi,Band 4:3.12dBi, Band 5:0.91dBi, Band 12:0.95dBi, Band 13:2.23dBi, Band 14:2.18dBi, Band 25:1.87dBi,Band 26:1.40dBi, Band 41:3.20dBi, Band 66:3.12dBi, Band 71:-0.48dBi

Single Module

FCC Statement
This device complies with part 15 of the FCC Rules. Operation is subject to the following two conditions:
(1) This device may not cause harmful interference, and
(2) this device must accept
any interference received, including interference that may cause undesired operation.

Any Changes or modifications not expressly approved by the party responsible for compliance could void the user's authority to operate the equipment.

The modular can be installed or integrated in mobile or fix devices only. This modular cannot be installed in any portable device.

FCC Radiation Exposure Statement
This modular complies with FCC RF radiation exposure limits set forth for an uncontrolled environment. This transmitter must not be co-located or operating in conjunction with any other

antenna or transmitter. This modular must be installed and operated with a minimum distance of 20 cm between the radiator and user body.

If the FCC identification number is not visible when the module is installed inside another device, then the outside of the device into which the module is installed must also display a label referring to the enclosed module. This exterior label can use wording such as the following: "Contains Transmitter Module FCC ID: 2AJYU-8PYA005 Or Contains FCC ID: 2AJYU-8PYA005"

When the module is installed inside another device, the user manual of the host must contain below warning statements;
1. This device complies with Part 15 of the FCC Rules. Operation is subject to the following two conditions:
(1) This device may not cause harmful interference.
(2) This device must accept any interference received, including interference that may cause undesired operation.

2. Changes or modifications not expressly approved by the party responsible for compliance could void the user's authority to operate the equipment.

The devices must be installed and used in strict accordance with the manufacturer's instructions as described in the user documentation that comes with the product.

Any company of the host device which install this modular with Single modular approval should perform the test of radiated emissionand spurious emission according to FCC part 15C : 15.247 and 15.209 requirement,Only if the test result comply with FCC part 15C : 15.247 and 15.209 requirement， then the host can be sold legally.

Copyright

This document contains the proprietary technical information which is the property of SIMCom Limited, copying of this document, giving it to others, the using or communication of the contents thereof are forbidden without the official authority by SIMCom. Offenders are liable to the payment of the damages. All rights are reserved in the event of grant of a patent or the registration of a utility model or design. All specifications supplied herein are subject to change without notice

Copyright © SIMCom Wireless Solutions Co., Ltd. 2020

Contents

Contents **5**

Revision History **7**

1 Introduction **8**

1.1 Product Outline 8

1.2 Hardware Interface Overview 8

1.3 Hardware Block Diagram 10

1.4 Functional Overview 11

2 Package Information **13**

2.1 Pin Assignment Overview 13

2.2 Pin Description 16

2.3 Mechanical Information 21

2.4 Footprint Recommendation 22

3 Interface Application **23**

3.1 Power Supply 23

3.1.1 Power Supply Design Guide 24

3.1.2 Recommended Power Supply Circuit 25

3.1.3 Voltage Monitor 25

3.2 Power on/Power off/Reset Function 26

3.2.1 Power on 26

3.2.2 Power off 27

3.2.3 Reset Function 28

3.3 UART Interface 29

3.3.1 UART Design Guide 29

3.3.2 RI and DTR Behavior 31

3.4 USB Interface 32

3.5 HSIC interface 33

3.7 SGMII Interface 33

3.7.1 Reference schematic with AR8033 34

3.7.2 Reference schematic with BCM89820 35

3.8 USIM Interface 36

3.8.1 USIM Application Guide 36

3.9 PCM Interface 40

3.9.1 PCM timing 40

3.9.2 PCM Application Guide 41

3.10 SD Interface 42

3.11 I2C Interface 44

3.12 SDIO Interface 44

3.13 SPI Interface 45

3.14 Network status 45

3.15 Flight Mode Control 46
3.16 Other interface 46
3.16.1 Sink Current Source 46
3.16.2 ADC 47
3.16.3 LDO 47

4 RF Specifications 49
4.7 GSM/UMTS/LTE RF Specifications 49
4.8 GSM /UMTS/LTE Antenna Design Guide 50
4.9 GNSS 52
4.9.1 GNSS Technical specification 52
4.9.2 GNSS Application Guide 52

5 Electrical Specifications 54
5.7 Absolute maximum ratings 54
5.8 Operating conditions 54
5.9 Operating Mode 55
5.9.1 Operating Mode Definition 55
5.9.2 Sleep mode 56
5.9.3 Minimum functionality mode and Flight mode 56
5.10 Current Consumption 57
5.11 ESD Notes 57

6 SMT Production Guide 59
6.7 Top and Bottom View of MODULE 59
6.8 Label Information 60
6.9 Typical SMT Reflow Profile 60
6.10 Moisture Sensitivity Level (MSL) 61
6.11 Stencil Foil Design Recommendation 62

7 Packaging 63

Appendix 65
Ⅰ. Coding Schemes and Maximum Net Data Rates over Air Interface 65
Ⅱ. Related Documents 65
Ⅲ. Terms and Abbreviations 68
Ⅳ. Safety Caution 70

Revision History

Data	Version	Description of change	Author
2020-1-7	1.00	Original	Xutao.Jiang Qiang.Zhang

1 Introduction

This document describes the electronic specifications, RF specifications, interfaces, mechanical characteristics and testing results of the SIMCom MODULE. With the help of this document and other software application notes/user guides, users can understand and use MODULE to design and develop applications quickly.

1.1 Product Outline

Aimed at the North American market, the MODULE support GSM, WCDMA, LTE-TDD and LTE-FDD. Users can choose the MODULE according to the wireless network configuration. The supported radio frequency bands are described in the following table.

Table 1: Module frequency bands

Standard	Frequency	SIM7600NA	SIM7600NA-H
	FDD B2	√	√
	FDD B4	√	√
	FDD B5	√	√
	FDD B12	√	√
	FDD B13	√	√
	FDD B14	√	√
	FDD B25	√	√
	FDD B26	√	√
	FDD B71	√	√
	FDD B66	√	√
	TDD B41	√	√
Category		CAT1	CAT4

With a small physical dimension of 30*30*2.9 mm and with the functions integrated, the MODULE can meet almost any space requirement in users' applications, such as smart phone, PDA, industrial handheld, machine-to-machine and vehicle application, etc.

1.2 Hardware Interface Overview

The interfaces are described in detail in the next chapters include:

- Power Supply
- USB2.0 Interface
- UART Interface
- MMC/SD Interface
- SDIO Interface
- USIM Interface
- SPI Interface

- GPIO
- ADC
- LDO Power Output
- Current Sink Source
- PCM Interface
- SPI Interface
- I2C Interface
- HSIC Interface
- SGMII Interface

1.3 Hardware Block Diagram

The block diagram of the MODULE is shown in the figure below.

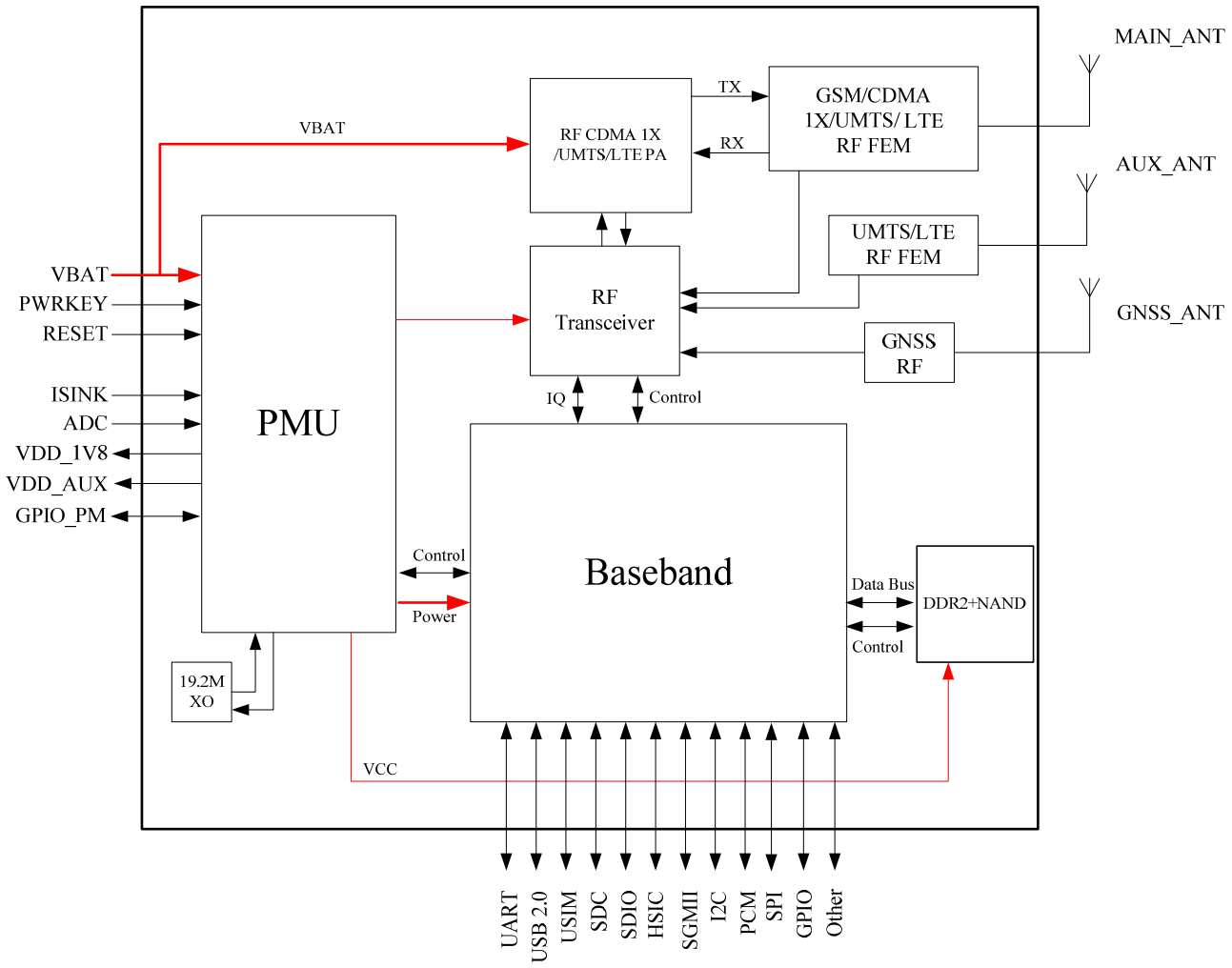

Figure 1: MODULE block diagram

1.4 Functional Overview

Table 2: General features

Feature	Implementation
Power supply	Single supply voltage 3.4～4.2V, Recommend supply voltage 3.8V
Power saving	Current in sleep mode : <5mA
Radio frequency bands	Please refer to the table 1
Transmitting power	LTE power class: 3 (0.25W)
Data Transmission Throughput	LTE CAT 1: 10 Mbps(DL) 5 Mbps(UL) LTE CAT 4 :150 Mbps (DL) 50 Mbps (UL)
Antenna	LTE main antenna. LTE auxiliary antenna GNSS antenna
GNSS	GNSS engine (GPS,GLONASS and BD) Protocol: NMEA 0183
SMS	MT, MO, CB, Text and PDU mode SMS storage: USIM card or ME(default) Transmission of SMS alternatively over CS or PS.
USIM interface	Support identity card: 1.8V/ 3V
USIM application toolkit	Support SAT class 3, GSM 11.14 Release 98 Support USAT
Phonebook management	Support phonebook types: DC,MC,RC,SM,ME,FD,ON,LD,EN
Audio feature	Support PCM interface Only support PCM master mode and short frame sync, 16-bit linear data formats
UART interface	A full modem serial port by default Baud rate: 300bps to 4Mbps(default:115200bps) Auto baud rate: 9600,19200,38400,57600,115200bps Can be used as the AT commands or data stream channel Support RTS/CTS hardware handshake Multiplex ability according to GSM 07.10 Multiplexer Protocol
MMC/SD	Support MMC and SD cards with 2.85 V on SD port
SDIO	Support SDIO with 1.8 V only on SDIO port
USB	USB 2.0 high speed interface, Can used be send AT command, Software update, GNSS NMEA,USB voice function etc.
Firmware upgrade	Firmware upgrade over USB interface or FOTA

Physical characteristics	Size:30*30*2.9m Weight:5.7 g
Temperature range	Normal operation temperature: -30°C to +80°C Extended operation temperature: -40°C to +85°C* Storage temperature -45°C to +90°C

Note: Module is able to make and receive voice calls, data calls, SMS and make GPRS/UMTS/HSPA+/LTE traffic in -40℃ ~ +85℃. The performance will be reduced slightly from the 3GPP specifications if the temperature is outside the normal operating temperature range and still within the extreme operating temperature range.

2 Package Information

2.1 Pin Assignment Overview

All functions of the MODULE will be provided through 135 pads that will be connected to the users' platform. The following Figure is a high-level view of the pin assignment of the MODULE.

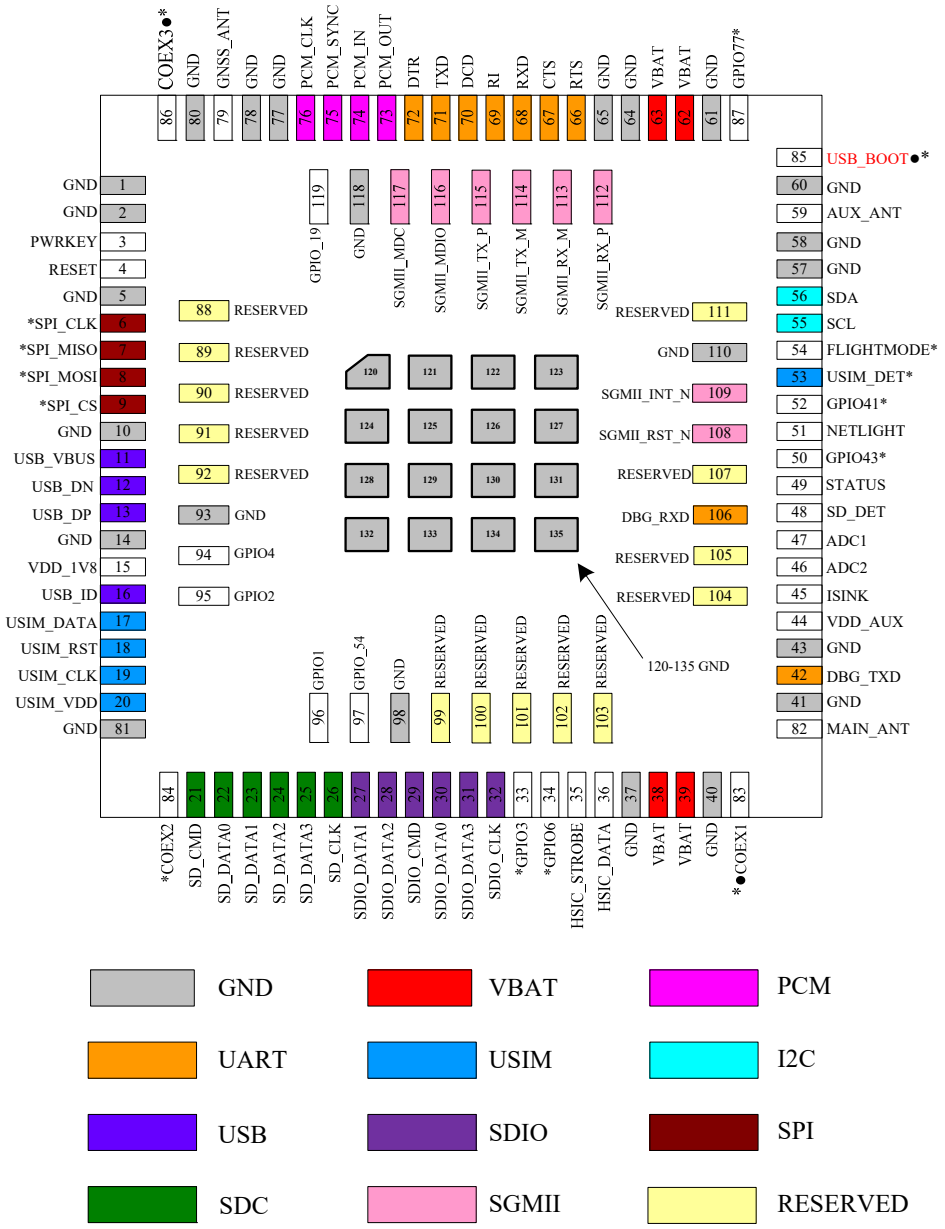

Figure 2: Pin assignment overview

Table 3: Pin definition

Pin No.	Pin name	Pin No.	Pin name
1	GND	2	GND
3	PWRKEY	4	RESET
5	GND	6	SPI_CLK*
7	SPI_MISO*	8	SPI_MOSI*
9	SPI_CS*	10	GND
11	USB_VBUS	12	USB_DN
13	USB_DP	14	GND
15	VDD_1V8	16	USB_ID
17	USIM_DATA	18	USIM_RST
19	USIM_CLK	20	USIM_VDD
21	SD_CMD	22	SD_DATA0
23	SD_DATA1	24	SD_DATA2
25	SD_DATA3	26	SD_CLK
27	SDIO_DATA1	28	SDIO_DATA2
29	SDIO_CMD	30	SDIO_DATA0
31	SDIO_DATA3	32	SDIO_CLK
33	GPIO3*	34	GPIO6*
35	HSIC_STROBE	36	HSIC_DATA
37	GND	38	VBAT
39	VBAT	40	GND
41	GND	42	DBG_TXD
43	GND	44	VDD_AUX
45	ISINK	46	ADC2
47	ADC1	48	SD_DET
49	STATUS	50	GPIO43*
51	NETLIGHT	52	GPIO41*
53	USIM_DET*	54	FLIGHTMODE*
55	SCL	56	SDA
57	GND	58	GND
59	AUX_ANT	60	GND
61	GND	62	VBAT
63	VBAT	64	GND
65	GND	66	RTS
67	CTS	68	RXD

69	RI	70	DCD
71	TXD	72	DTR
73	PCM_OUT	74	PCM_IN
75	PCM_SYNC	76	PCM_CLK
77	GND	78	GND
79	GNSS_ANT	80	GND
81	GND	82	MAIN_ANT
83	COEX1●*	84	COEX2*
85	BOOT_CFG0●*	86	COEX3●*
87	GPIO77	88	RESERVED
89	RESERVED	90	RESERVED
91	RESERVED	92	RESERVED
93	GND	94	GPIO4
95	GPIO2	96	GPIO1
97	GPIO_54	98	GND
99	RESERVED	100	RESERVED
101	RESERVED	102	RESERVED
103	RESERVED	104	RESERVED
105	RESERVED	106	DBG_ RXD
107	RESERVED	108	SGMII_RST_N
109	SGMII_INT_N	110	GND
111	RESERVED	112	SGMII_RX_P
113	SGMII_RX_M	114	SGMII_TX_M
115	SGMII_TX_P	116	SGMII_MDIO
117	SGMII_MDC	118	GND
119	GPIO_19	120	GND
121	GND	122	GND
123	GND	124	GND
125	GND	126	GND
127	GND	128	GND
129	GND	130	GND
131	GND	132	GND
133	GND	134	GND
135	GND		

NOTE: ● Means Before the normal power up, COEX1, COEX3 or BOOT_CFG0 cannot be pulled up, otherwise module will not be powered up normally.

**** Means that pins has MUX function.***

2.2 Pin Description

Table 4: IO parameters definition

Pin type	Description
PI	Power input
PO	Power output
AI	Analog input
AIO	Analog input/output
I/O	Bidirectional input /output
DI	Digital input
DO	Digital output
DOH	Digital output with high level
DOL	Digital output with low level
PU	Pull up
PD	Pull down

Table 5: Pin description

Pin name	Pin No.	Default status	Description	Comment
Power supply				
VBAT	38,39, 62,63	PI	Power supply, voltage range: 3.4～4.2V.	
VDD_AUX	44	PO	LDO power output for other external circuits with Max 150mA current output. Its output voltage is 2.85V by default.（The voltage can be configured from 1.7V to 3.05V by AT command）.	If used SGMII function ,this pin used for SGMII function. If unused, keep it open.
VDD_1V8	15	PO	1.8 output with Max 50mA current output for external circuit, such as level shift circuit.	If unused, keep it open.
GND	1,2,5, 10,14,37 ,40,41,4 3,57,58, 60,61,64 ,65,77,7 8,80,81, 93,96,11 0,118,12 0,121,12 2,123,12 4,125,12 6,127,12 8,129,13		Ground	

	0,131,132,133,134135			
System Control				
PWRKEY	3	DI,PU	System power on/off control input, active low.	The high voltage is 0.8V;
RESET	4	DI, PU	System reset control input, active low.	RESET has been pulled up to 1.8V via 40Kohm resistor internally.
SD interface				
SD_CMD	21	I/O,PD	SDIO command	If unused, keep them open.
SD_DATA0	22	I/O,PD	SDIO data	
SD_DATA1	23	I/O,PD		
SD_DATA2	24	I/O,PD		
SD_DATA3	25	I/O,PD		
SD_CLK	26	DO	SDIO clock	
SD_DET	48	DI,PU	SD card insertion detect H: SD card is removed L: SD card is inserted	
USIM interface				
USIM_DATA	17	I/O,PU	USIM Card data I/O, which has been pulled up via a 10KR resistor to USIM_VDD internally. Do not pull it up or down externally.	All lines of USIM interface should be protected against ESD.
USIM_RST	18	DO,PD	USIM Reset	
USIM_CLK	19	DO,PD	USIM clock	
USIM_VDD	20	PO,PD	Power output for USIM card, its output Voltage depends on USIM card type automatically. Its output current is up to 50mA.	
SPI interface				
SPI_CLK*	6	DO	SPI clock output	Default SPI Optional: BT uart function
SPI_MISO*	7	DI	SPI master in/slave out data	
SPI_MOSI*	8	DO	SPI master out/slave in data	
SPI_CS*	9	DO	SPI chip-select output	
USB				
USB_VBUS	11	AI	Valid USB detection input with 3.0~5.25V detection voltage	
USB_DN	12	AI, AO	Negative line of the differential, bi-directional USB signal.	

USB_DP	13	AI, AO	Positive line of the differential, bi-directional USB signal.	
USB_ID	16	AI	High-speed USB ID input	Keep it open.
SGMII interface				
SGMII_RX_P	112	AI	SGMII receive – positive	If unused, keep them open.
SGMII_RX_M	113	AI	SGMII receive - negative	
SGMII_TX_M	114	AO	SGMII transmit - negative	
SGMII_TX_P	115	AO	SGMII transmit– positive	
SGMII_RST_N	108	DO	Ethernet PHY reset	External 1.5K pull-up resistor from 3.3V/2.5V to MDIO DATA and 10K pull-up resistor from VDD_1V8 to ETH_INT_N are needed when the Ethernet PHY is connected. If unused, please keep them open.
SGMII_INT_N	109	DI,PU	Ethernet PHY interrupt	
SGMII_MDIO	116	DIO	Management data input/output-data	
SGMII_MDC	117	DO	Management data input/output-clock	
UART interface				
RTS	66	DOH	Request to send	If unused, keep them open.
CTS	67	DI	Clear to Send	
RXD	68	DI	Receive Data	
RI	69	DOH	Ring Indicator	
DCD	70	DOH	Carrier detects	
TXD	71	DOH	Transmit Data	
DTR	72	DI,PU	DTE get ready	
DBG_UART				
DBG_TXD	42	DO	Log output	If unused, keep them open.
DBG_RXD	106	DI	Log input	
I2C interface				
SCL	55	OD	I2C clock output	If unused, keep open, or else pull them up via 2.2KΩ resistors to 1.8V.
SDA	56	OD	I2C data input/output	
SDIO interface				
SDIO_DATA1	27	I/O	SDIO data1	It can be used for WLAN function. If unused, please
SDIO_DATA2	28	I/O	SDIO data2	
SDIO_CMD	29	I/O	SDIO command	

SDIO_DATA0	30	I/O	SDIO data0	keep them open.
SDIO_DATA3	31	I/O	SDIO data3	
SDIO_CLK	32	DO	SDIO clock	
HSIC interface				
HSIC_STROBE	35	I/O	HSIC strobe wakeup	***If use, please refer to document [27]*** Otherwise please keep them open.
HSIC_DATA	36	I/O	HSIC data	
PCM interface				
PCM_OUT	73	DO,PD	PCM data output.	If unused, please keep them open.
PCM_IN	74	DI,PD	PCM data input.	
PCM_SYNC	75	I/O,PD	PCM data frame sync signal.	
PCM_CLK	76	I/O,PU	PCM data bit clock.	
GPIO				
NETLIGHT	51	DO,PU	LED control output as network status indication.	If unused, keep them open.
STATUS	49	DO,PU	Operating status output. High level: Power on and firmware ready Low level: Power off	
GPIO4	94	IO,PD	Default: GPIO	
GPIO2	95	IO,PD	Default: GPIO	
GPIO1	96	IO,PD	Default: GPIO	
GPIO_54	97	IO,PD	Default: GPIO	
GPIO_19	119	IO,PD	Default: GPIO	
RF interface				
MAIN _ANT	82	AIO	MAIN antenna soldering pad	
GNSS_ANT	79	AI	GNSS antenna soldering pad	
AUX_ANT	59	AI	Auxiliary antenna soldering pad	
Other interface				
ISINK	45	PI	Ground-referenced current sink.	If unused, please keep them open.
ADC1	47	AI	Analog-digital converter input 1	
ADC2	46	AI	Analog-digital converter input 2	
RESERVED	88,89,90,91,92,99,100,101,102,103,104,105,107,111		Reserved for future use	Please keep them open.
Mux function interface				
COEX1●*	83	I/O	RF synchronizing between Wi-Fi and LTE.	Default:COEX1●* Option:WLAN_EN●

COEX2*	84	I/O	RFsynchronizing between Wi-Fi and LTE.	Default:COEX2* Option: WoWWAN●
COEX3●*	86	I/O	RF synchronizing between Wi-Fi and LTE.	Default:COEX3* Option:BT_PCM_CLK●
BOOT_CFG0●*	85	DI,PD	Boot configuration input. Module will be forced into USB download mode by connect 85 pin to VDD_1V8 during power up.	Default: BOOT_CFG0●* Option:COEX_RXD● Do place 2 test points for debug. ***DO NOT PULL UP BOOT_CFG0 DURING NORMAL POWER UP!***
FLIGHTMODE*	54	DI,PU	Flight Mode control input. High level(or open): Normal Mode Low level: Flight Mode	Default: FLIGHTMODE* Option:BT_PCM_IN●
GPIO3*	33	IO	GPIO	Default:GPIO3* Option:WL_PWR_EN●
GPIO6*	34	IO	GPIO	Default:GPIO6* Option:WL_SLP_CLK●
USIM_DET*	53	IO	Default: GPIO Optional: USIM card detecting input. H: USIM is removed L: USIM is inserted	Default:USIM_DET* Option:BT_EN●
GPIO77*	87	IO	GPIO	Default:GPIO77* Option:BT_PCM_OUT●
GPIO43*	50	I/O,PD	GPIO	Default:GPIO43* Option:COEX_TXD●
GPIO41*	52	I/O,PD	GPIO	Default:GPIO41* Option:BT_PCM_SYNC●

2.3 Mechanical Information

The following figure shows the package outline drawing of MODULE.

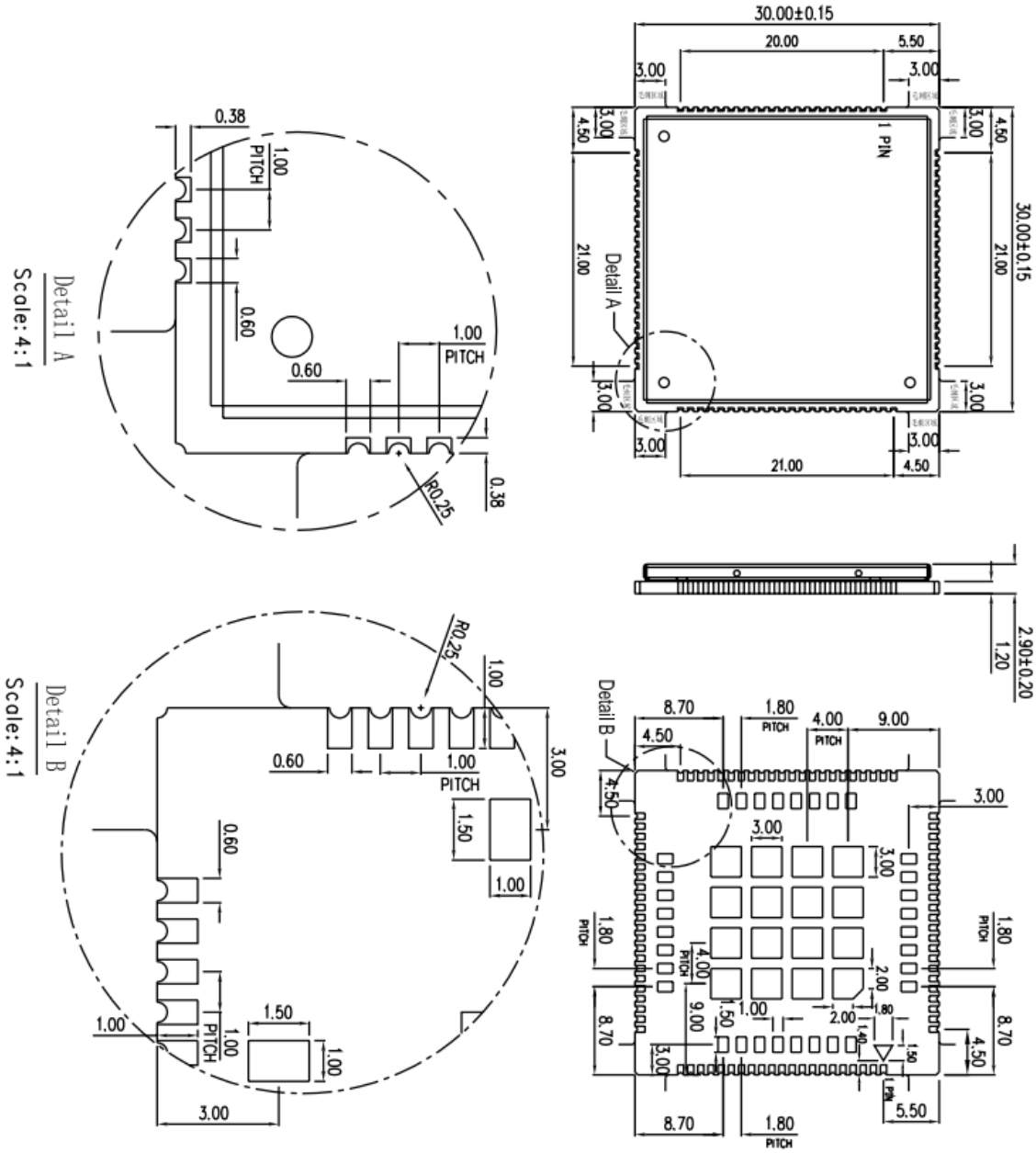

Figure 3: Dimensions (Unit: mm)

2.4 Footprint Recommendation

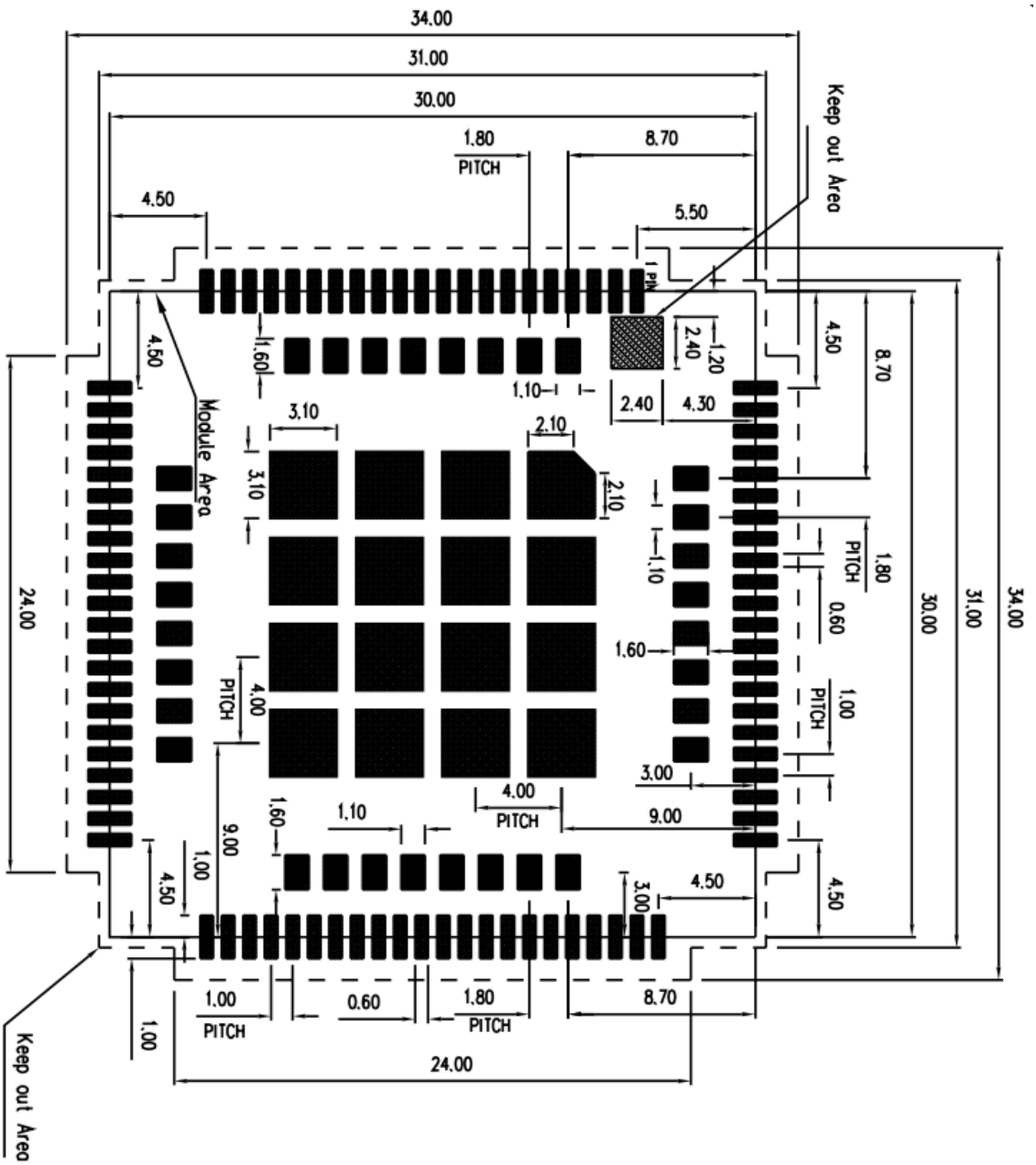

Figure 4: Footprint recommendation (Unit: mm)

3 Interface Application

3.1 Power Supply

The power supply pins of MODULE include 4 pins (pin 62&63, pin 38&39) named VBAT.
The 4 VBAT pads supply the power to RF and baseband circuits directly. On VBAT pads, the ripple current up to 2A typically, due to GSM/GPRS emission burst (every 4.615ms), may cause voltage drop. So the power supply for these pads must be able to provide sufficient current up to more than 2A in order to avoid the voltage drop is more than 300mV.
The following figure shows the VBAT voltage ripple wave at the maximum power transmit phase.

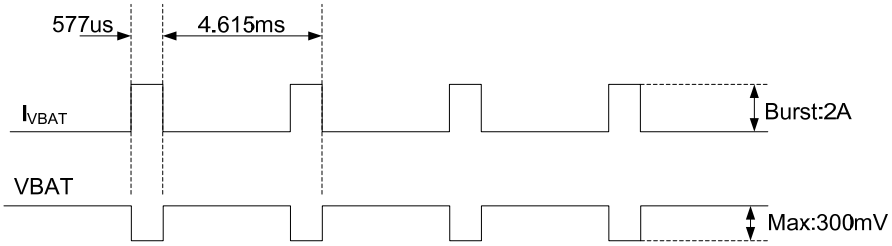

Figure 5: VBAT voltage drop during burst emission (GSM/GPRS)

Note: The test condition: The voltage of power supply for VBAT is 3.8V, Cd=100 µF tantalum capacitor (ESR=0.7Ω) and Cf=100nF (Please refer to Figure 6—Application circuit).

Table 6: VBAT pins electronic characteristic

Symbol	Description	Min.	Typ.	Max.	Unit
VBAT	Module power voltage	3.4	3.8	4.2	V
$I_{VBAT(peak)}$	Module power peak current in normal mode.	-	2	-	A
$I_{VBAT(average)}$	Module power average current in normal mode	Please refer to the table 34			
$I_{VBAT(sleep)}$	Power supply current in sleep mode				
$I_{VBAT(power-off)}$	Module power current in power off mode.	-	-	20	uA

3.1.1 Power Supply Design Guide

Make sure that the voltage on the VBAT pins will never drop below 3.4V, even during a transmit burst, when current consumption may rise up to 2A. If the voltage drops below 3.4V, the RF performance may be affected.

Note: If the power supply for VBAT pins can support up to 2A, more than 300uF capacitors are recommended .Otherwise users must use a total of 1000uF capacitors typically, in order to avoid of the voltage drop more than 300mV.

Some multi-layer ceramic chip (MLCC) capacitors (0.1/1uF) with low ESR in high frequency band can be used for EMC.

These capacitors should be put as close as possible to VBAT pads. Also, users should keep VBAT trace on circuit board wider than 2 mm to minimize PCB trace impedance. The following figure shows the recommended circuit.

Recommend Bead for vbat filter is BLM21PG300SN1D and MPZ2012S221A。

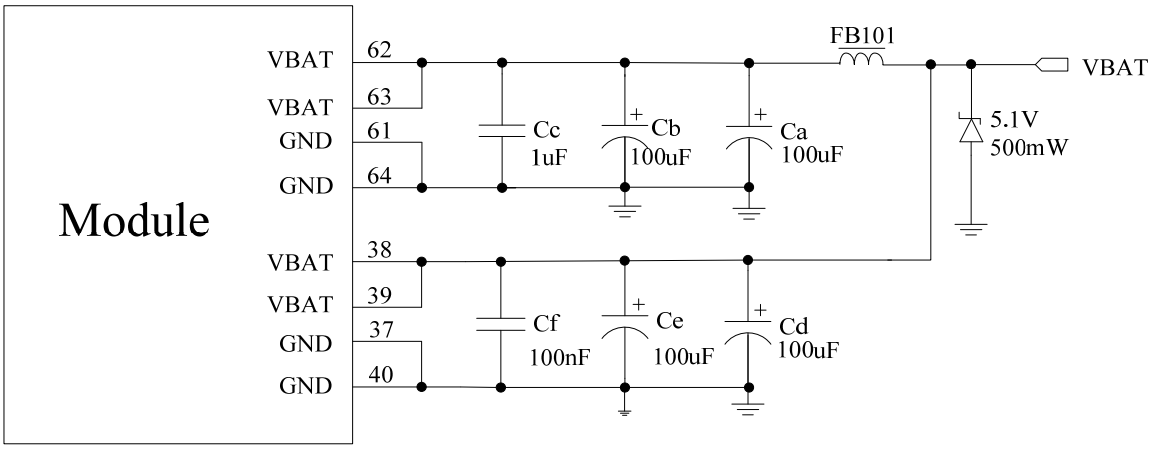

Figure 6: Power supply application circuit

In addition, in order to guard for over voltage protection, it is suggested to use TVS.

Note: user could only power pin 62, 63 or only power pin 38, 39, for these pins are connected inside the MODULE.

Table 7: Recommended TVS list

No.	Manufacturer	Part Number	Power dissipation	Package
1	JCET	ESDBW5V0A1	5V	DFN1006-2L
2	WAYON	WS05DPF-B	5V	DFN1006-2L
3	WILLSEMI	ESD5611N	5V	DFN1006-2L
4	WILLSEMI	ESD56151W05	5V	SOD-323
5*	PRISEMI	PESDHC2FD4V5BH	4.5V	DFN1006-2L
6*	WAYON	WS4.5DPV	4.5V	DFN1610-2L

Note: If user chooses TVS, please pay attention to Clamping Voltage in your datasheet . For example when the surge input is 100V,the Clamping Voltage is less than 10V.

* ***If vbat is higher than 3.8V, do not choose 5 and 6.***

3.1.2 Recommended Power Supply Circuit

It is recommended that a switching mode power supply or a linear regulator power supply is used. It is important to make sure that all the components used in the power supply circuit can resist a peak current up to 2A.

The following figure shows the linear regulator reference circuit with 5V input and 3.8V output.

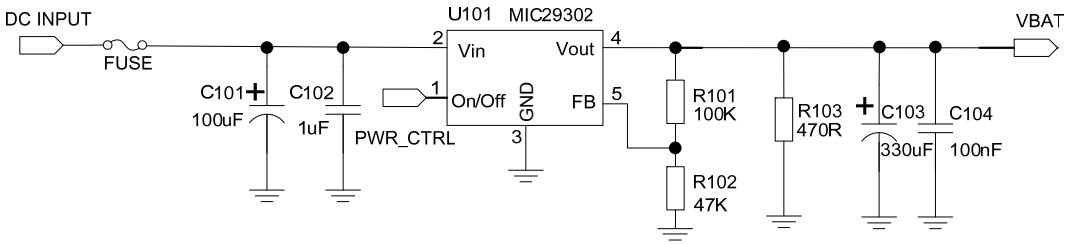

Figure 7: Linear regulator reference circuit

If there is a big voltage difference between input and output for VBAT power supply, or the efficiency is extremely important, then a switching mode power supply will be preferable. The following figure shows the switching mode power supply reference circuit.

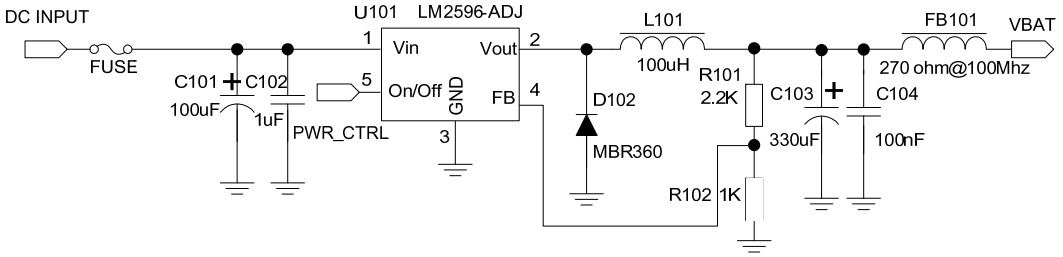

Figure 8: Switching mode power supply reference circuit

Note: The Switching Mode power supply solution for VBAT must be chosen carefully against Electro Magnetic Interference and ripple current from depraving RF performance.

3.1.3 Voltage Monitor

To monitor the VBAT voltage, the AT command "AT+CBC" can be used.

For monitoring the VBAT voltage outside or within a special range, the AT command "AT+CVALARM" can be used to enable the under-voltage warning function.

If users need to power off MODULE, when the VBAT voltage is out of a range, the AT command "AT+CPMVT" can be used to enable under-voltage power-off function.

Note: Under-voltage warning function and under-voltage power-off function are disabled by default. For more information about these AT commands, please refer to Document [1].

3.2 Power on/Power off/Reset Function

3.2.1 Power on

MODULE can be powered on by pulling the PWRKEY pin down to ground.
The PWRKEY pin has been pulled up with a diode to 1.8V internally, so it does not need to be pulled up externally. It is strongly recommended to put a100nF capacitor, an ESD protection diode, close to the PWRKEY pin as it would strongly enhance the ESD performance of PWRKEY pin. Please refer to the following figure for the recommended reference circuit.

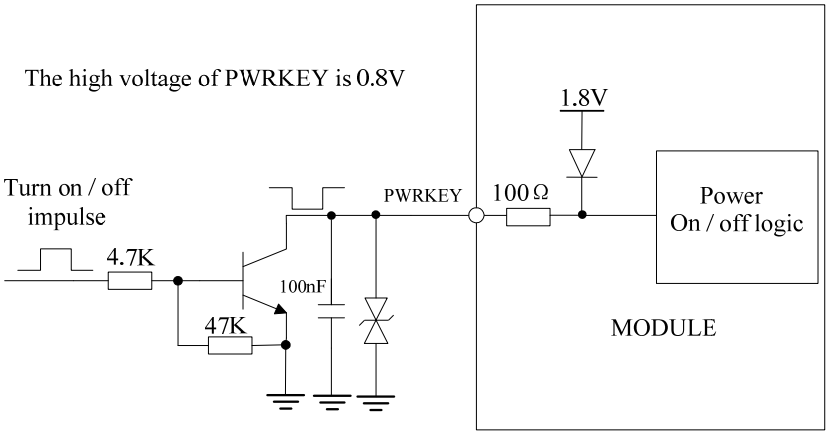

Figure 9: Reference power on/off circuit

Note: Module could be automatically power on by connecting PWRKEY pin to ground via 0R resistor directly.

The power-on scenarios are illustrated in the following figure.

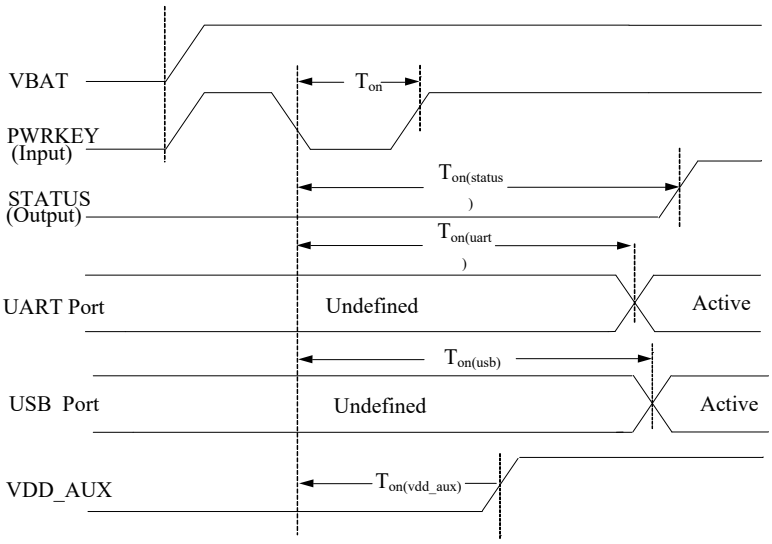

Figure 10: Power on timing sequence

Table 8: Power on timing and electronic characteristic

Symbol	Parameter	Min.	Typ.	Max.	Unit
T_{on}	The time of active low level impulse of PWRKEY pin to power on MODULE	100	500	-	ms
$T_{on(status)}$	The time from power-on issue to STATUS pin output high level(indicating power up ready)	15	16	-	s
$T_{on(uart)}$	The time from power-on issue to UART port ready	13	14	-	s
$T_{on(vdd_aux)}$	The time from power-on issue to VDD_AUX ready		2.5	-	s
$T_{on(usb)}$	The time from power-on issue to USB port ready	11	12	-	s
V_{IH}	Input high level voltage on PWRKEY pin	0.6	0.8	1.8	V
V_{IL}	Input low level voltage on PWRKEY pin	-0.3	0	0.5	V

3.2.2 Power off

The following methods can be used to power off MODULE.

- Method 1: Power off MODULE by pulling the PWRKEY pin down to ground.
- Method 2: Power off MODULE by AT command “AT+CPOF”.
- Method 3: over-voltage or under-voltage automatic power off. The voltage range can be set by AT command “AT+CPMVT”.
- Method 4: over-temperature or under-temperature automatic power off.

Note: If the temperature is outside the range of -30~+80 ℃, some warning will be reported via AT port. If the temperature is outside the range of -40~+85 ℃, MODULE will be powered off automatically.

For details about “AT+CPOF” and “AT+CPMVT”, please refer to Document [1].

These procedures will make MODULE disconnect from the network and allow the software to enter a safe state, and save data before MODULE be powered off completely.
The power off scenario by pulling down the PWRKEY pin is illustrated in the following figure.

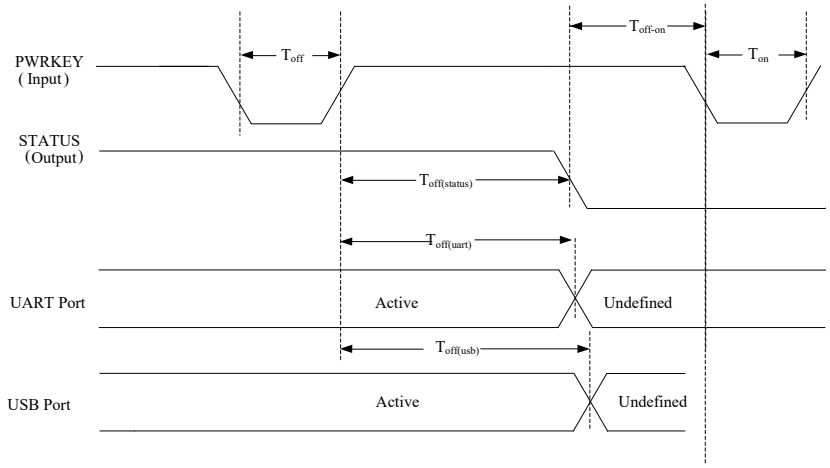

Figure 11: Power off timing sequence

Table 9: Power off timing and electronic characteristic

Symbol	Parameter	Time value			Unit
		Min.	Typ.	Max.	
T_{off}	The active low level time pulse on PWRKEY pin to power off MODULE	--	2.5	--	s
$T_{off(status)}$	The time from power-off issue to STATUS pin output low level(indicating power off)*	25	26	-	s
$T_{off(uart)}$	The time from power-off issue to UART port off	14	15	-	s
$T_{off(usb)}$	The time from power-off issue to USB port off	27	28	-	s
T_{off-on}	The buffer time from power-off issue to power-on issue	0	-	-	s

Note: The STATUS pin can be used to detect whether MODULE is powered on or not. When MODULE has been powered on and firmware goes ready, STATUS will be high level, or else STATUS will still low level.

3.2.3 Reset Function

MODULE can be reset by pulling the RESET pin down to ground.

Note: This function is only used as an emergency reset, when AT command "AT+CPOF" and the PWRKEY pin all have lost efficacy.

The RESET pin has been pulled up with a 40KΩ resistor to 1.8V internally, so it does not need to be pulled up externally. It is strongly recommended to put a100nF capacitor and an ESD protection diode close to the RESET pin. Please refer to the following figure for the recommended reference circuit.

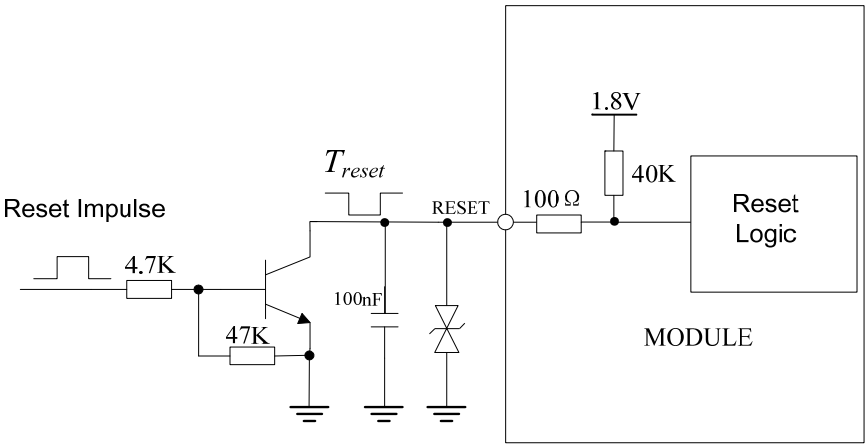

Figure 12: Reference reset circuit

Table 10: RESET pin electronic characteristic

Symbol	Description	Min.	Typ.	Max.	Unit
T_{reset}	The active low level time impulse on RESET pin to reset MODULE	100	200	500	ms
V_{IH}	Input high level voltage	1.17	1.8	2.1	V
V_{IL}	Input low level voltage	-0.3	0	0.8	V

3.3 UART Interface

MODULE provides a 7-wire UART (universal asynchronous serial transmission) interface as DCE (Data Communication Equipment). AT commands and data transmission can be performed through UART interface.

3.3.1 UART Design Guide

The following figures show the reference design.

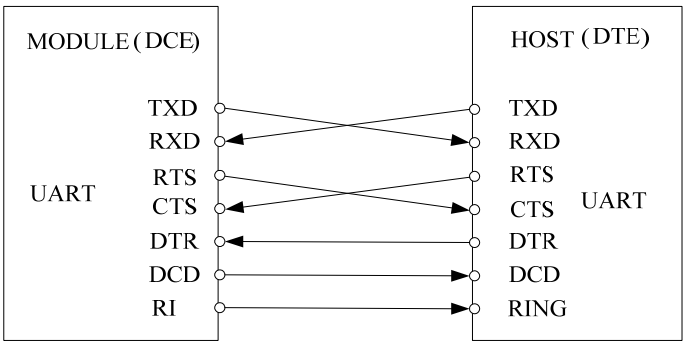

Figure 13: UART full modem

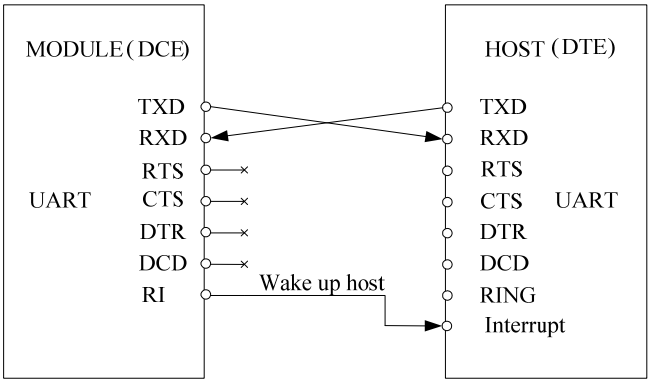

Figure 14: UART null modem

The MODULE UART is 1.8V voltage interface. If user's UART application circuit is 3.3V voltage interface, the level shifter circuits should be used for voltage matching. The TXB0108RGYR provided by Texas Instruments is recommended. The following figure shows the voltage matching reference design.

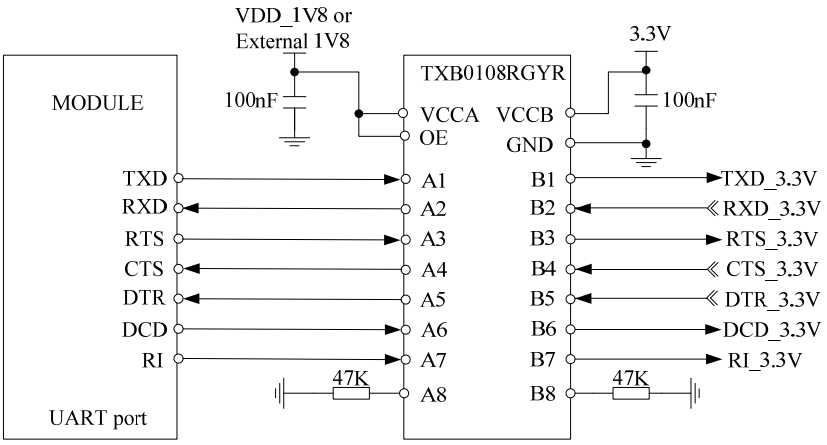

Figure 15: Reference circuit of level shift

User can use another level shifter circuits as follow

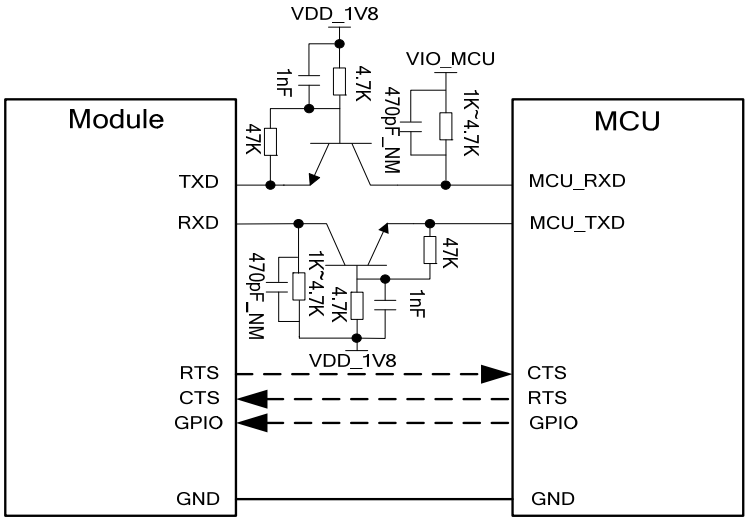

Figure 16: level matching circuit

To comply with RS-232-C protocol, the RS-232-C level shifter chip should be used to connect MODULE to the RS-232-C interface, for example SP3238ECA, etc.

Note1: User needs to use high speed transistors such as MMBT3904.

Note2: MODULE supports the following baud rates: 300, 600, 1200, 2400, 4800, 9600, 19200, 38400, 57600, 115200, 230400, 460800, 921600, 3200000, 3686400, 4000000bps. The default band rate is 115200bps.

3.3.2 RI and DTR Behavior

The RI pin can be used to interrupt output signal to inform the host controller such as application CPU.

Normally RI will keep high level until certain conditions such as receiving SMS, or a URC report coming, and then it will change to low level.

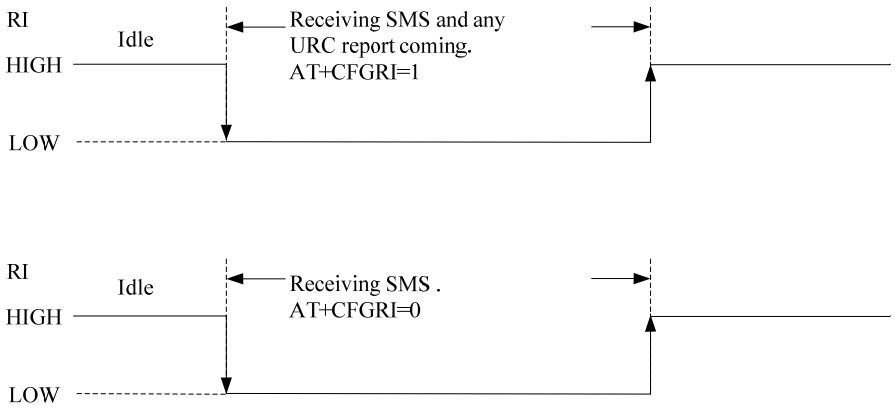

Figure 17: RI behaviour（SMS and URC report）

Normally RI will be kept at a high level until a voice call, then it will output periodic rectangular wave with 5900ms low level and 100ms high level. It will output this kind of periodic rectangular wave until the call is answered or hung up.

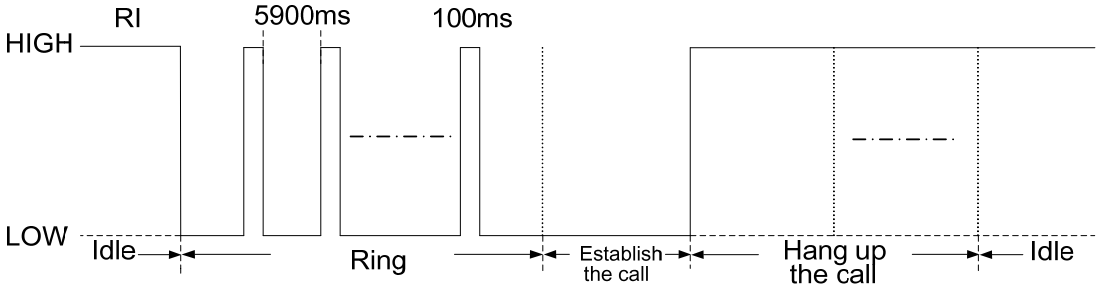

Figure 18 : RI behaviour（voice call）

Note: For more details of AT commands about UART, please refer to document [1] and [22].

DTR pin can be used to wake MODULE from sleep. When MODULE enters sleep mode, pulling down DTR can wake MODULE.

3.4 USB Interface

The MODULE contains a USB interface compliant with the USB2.0 specification as a peripheral, but the USB charging function is not supported.

MODULE can be used as a USB device. MODULE supports the USB suspend and resume mechanism which can reduce power consumption. If there is no data transmission on the USB bus, MODULE will enter suspend mode automatically, and will be resumed by some events such as voice call, receiving SMS, etc.

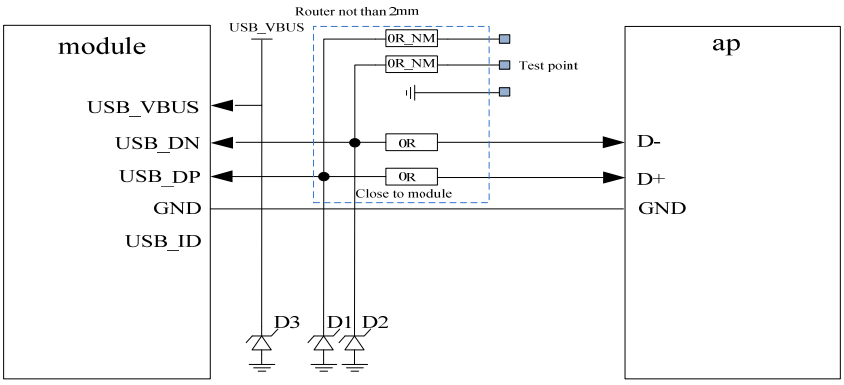

Figure 19: USB reference circuit

Because of the high bit rate on USB bus, more attention should be paid to the influence of the junction capacitance of the ESD component on USB data lines. Typically, the capacitance should be less than 1pF. It is recommended to use an ESD protection component such as ESD9L5.0ST5G provided by On Semiconductor (www.onsemi.com).

D3 is suggested to select the diode with anti-ESD and voltage surge function, or user could add a TVS for surge clamping. The recommend TVS please refer to table 7.

Note：The USB_DN and USB_DP nets must be traced by 90Ohm+/-10% differential impedance.

3.5 HSIC interface

HSIC is a 2-signal source synchronous serial interface which uses 240MHz DDR signaling to provide High-Speed 480Mbps USB transfers which are 100% host driver compatible with traditional USB cable-connected topologies. Full-Speed (FS) and Low-Speed (LS) USB transfers are not directly supported by the HSIC interface (a HSIC enabled hub can provide FS and LS support, as well as IC_USB support)

The differences between HSIC and USB2.0 are listed below:

Table 11: Key differences between HSIC and HS-USB

HSIC	USB2.0
Signal-ended signaling at 1.2 V	Differential signaling
Two signals – STROBE, DATA	Four wires – Ground, D+, D-, VBUS
Double data rate signaling	Data inferred from differential signaling
HS-USB 480 Mbps only	HS/FS/LS support
Maximum trace length of 10 cm	Maximum cable length of 5 m
No HS chirp protocol	HS chirp protocol
Lower power consumption (digital)	Higher power consumption (analog)
No concept of disconnect	Hot plug/play support

module implements a HSIC interface compliant with the HSIC1.0 specification which can be used to connect to the external IC.

Note: The module HSIC default work as HSIC to LAN function, if user have any other questions , please contact simcom for more details.

3.6 SGMII Interface

MODULE provides a SGMII interface with an Ethernet MAC embedded, users could add a PHY to connect to the Ethernet, and the PHY device could be controlled by the MDIO interface and other dedicated signals.

Two Ethernet PHY are supported: AR8031/AR8033 (Qualcomm) and BCM89820 (Broadcom). The AR8031/AR8033 is used for the industrial field and the BCM89820 is dedicated for the automotive field.

Main features of SGMII:

- Ethernet Mac integrated in the module
- IEEE 802.3 Ethernet 10/100/1000Mbps, SGMII IF
- Supports IEEE 1588, Precision Time Protocol (PTP)

- Full duplex rated to 1 Gbps
- Half/full duplex for 10/100 Mbps
- Can be connected to external Ethernet PHY like AR8031/AR8033(industrial 10/100/1000Mbps), BCM89820(automotive 10/100Mbps)
- Uses 8B10B encoding of data with effective baud data rate of 1 Gbps, data rate is always 1.25 Gbps (or DDR clock is always at 625 MHz)

Main features of MDIO:

- Host mode only
- Dual voltage: 1.8 V or 2.85 V operation
- Default signal frequency: 6.25MHz
- MDIO_DATA is OD-gate, and requires an external 1.5 kΩ pull-up resistor to VMDIO.

For the AR8031/AR8033, User should provide 3.3V to power the external Ethernet PHY system and the current should be more than 200mA.

3.6.1 Reference schematic with AR8033

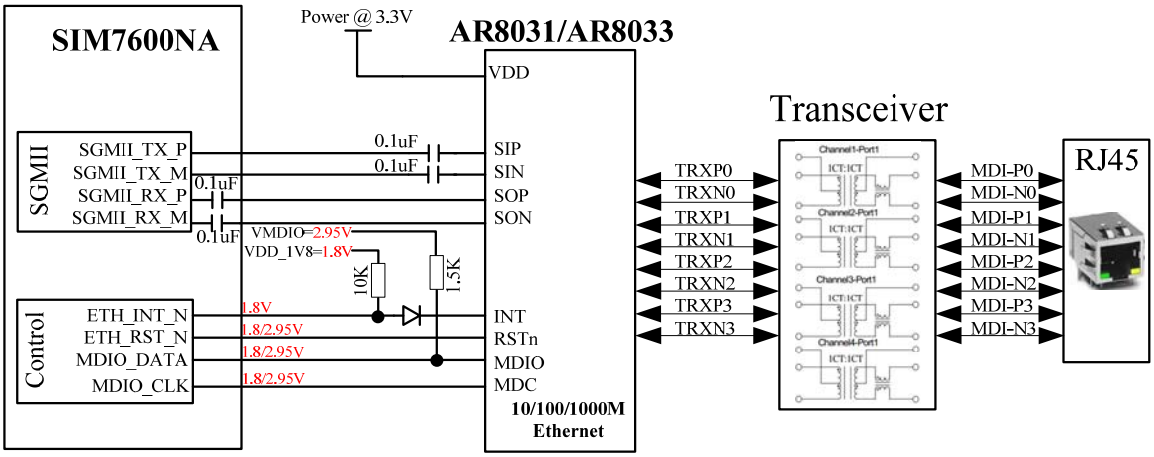

Figure20: Reference SGMII circuit with AR8033

For the BCM89820, Users should provide 3.3V and 1.2V to power the external Ethernet PHY system and the data interface of PHY. The current of 3.3V and 1.2V should be more than 100mA and 150mA.

3.6.2 Reference schematic with BCM89820

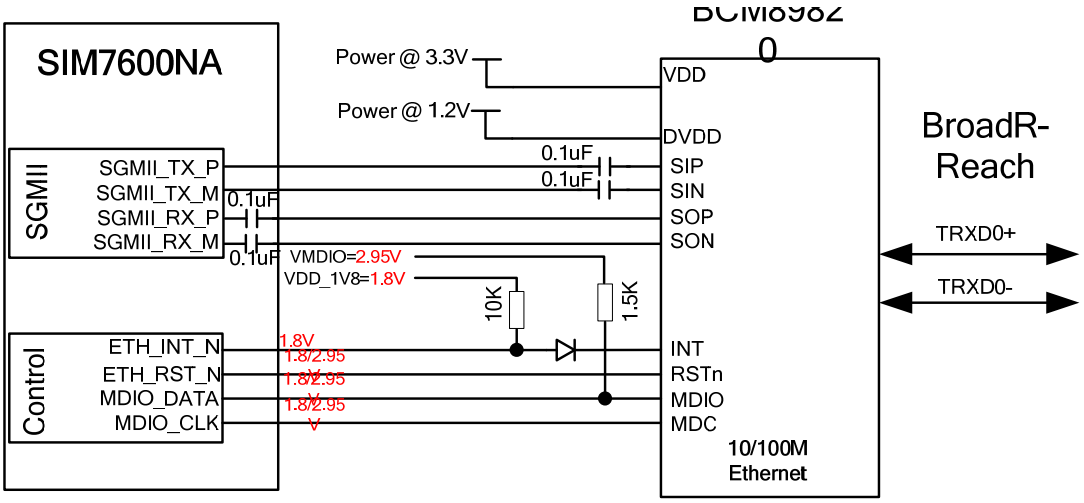

Figure21: Reference SGMII circuit with BCM89820

Note: The module SGMII function default closed. If user need, please contact SIMCom for more details or refer to document [28]

3.7 USIM Interface

MODULE supports both 1.8V and 3.0V USIM Cards.

Table 12: USIM electronic characteristic in 1.8V mode (USIM_VDD=1.8V)

Symbol	Parameter	Min.	Typ.	Max.	Unit
USIM_VDD	LDO power output voltage	1.75	1.8	1.95	V
V_{IH}	High-level input voltage	0.65*USIM_VDD	-	USIM_VDD +0.3	V
V_{IL}	Low-level input voltage	-0.3	0	0.35*USIM_VDD	V
V_{OH}	High-level output voltage	USIM_VDD -0.45	-	USIM_VDD	V
V_{OL}	Low-level output voltage	0	0	0.45	V

Table 13: USIM electronic characteristic 3.0V mode (USIM_VDD=2.95V)

Symbol	Parameter	Min.	Typ.	Max.	Unit
USIM_VDD	LDO power output voltage	2.75	2.95	3.05	V
V_{IH}	High-level input voltage	0.65*USIM_VDD	-	USIM_VDD +0.3	V
V_{IL}	Low-level input voltage	-0.3	0	0.25*USIM_VDD	V
V_{OH}	High-level output voltage	USIM_VDD -0.45	-	USIM_VDD	V
V_{OL}	Low-level output voltage	0	0	0.45	V

3.7.1 USIM Application Guide

It is recommended to use an ESD protection component such as ESDA6V1W5 produced by ST (www.st.com) or SMF15C produced by ON SEMI (www.onsemi.com). Note that the USIM peripheral circuit should be close to the USIM card socket. The following figure shows the 6-pin SIM card holder reference circuit.

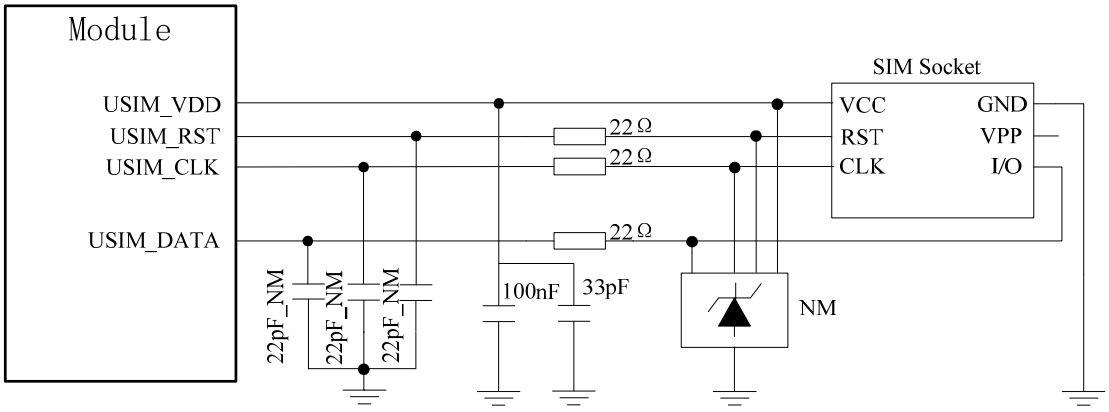

Figure 202: USIM interface reference circuit

Note: USIM_DATA has been pulled up with a 10KΩ resistor to USIM_VDD in MODULE. A 100nF capacitor on USIM_VDD is used to reduce interference. For more details of AT commands about USIM, please refer to document [1].USIM_CLK is very important signal, the rise time and fall time of USIM_CLK should be less than 40ns, otherwise the USIM card might not be initialized correctly.

The USIM_DET pin is used for detection of the USIM card hot plug in. User can select the 8-pin USIM card holder to implement USIM card detection function.

The following figure shows the 8-pin SIM card holder reference circuit.

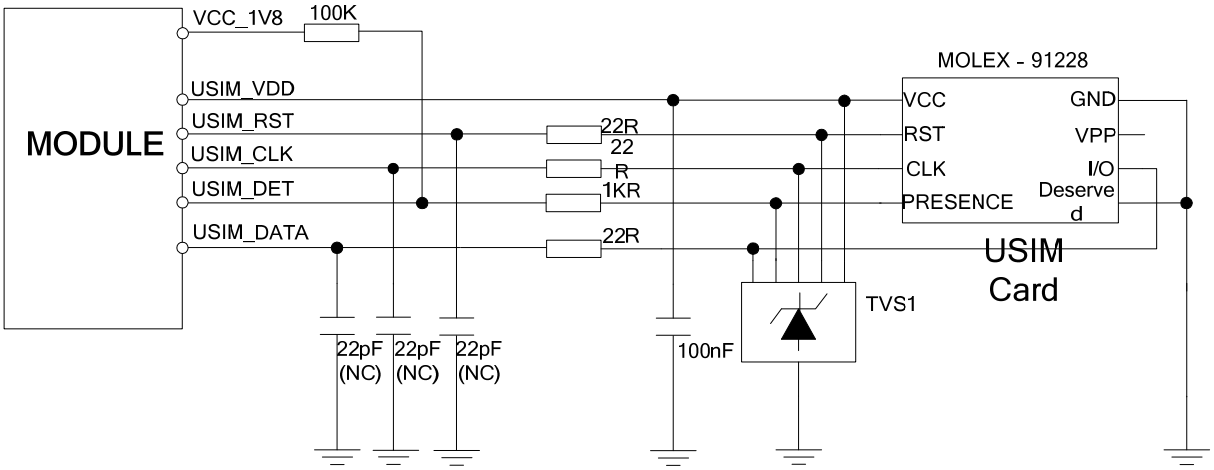

Figure 213: USIM interface reference circuit with USIM_DET

If the USIM card detection function is not used, user can keep the USIM_DET pin open.

SIM card circuit is susceptible, the interference may cause the SIM card failures or some other situations, so it is strongly recommended to follow these guidelines while designing:

- Make sure that the SIM card holder should be far away from the antenna while in PCB layout.
- SIM traces should keep away from RF lines, VBAT and high-speed signal lines.
- The traces should be as short as possible.
- Keep SIM holder's GND connect to main ground directly.
- Shielding the SIM card signal by ground.
- Recommended to place a 0.1～1uF capacitor on USIM_VDD line and keep close to the holder.
- The rise/fall time of USIM_CLK should not be more than 40ns.
- Add some TVS and the parasitic capacitance should not exceed 60pF.

Recommended USIM Card Holder

It is recommended to use the 6-pin USIM socket such as C707 10M006 512 produced by Amphenol. User can visit http://www.amphenol.com for more information about the holder.

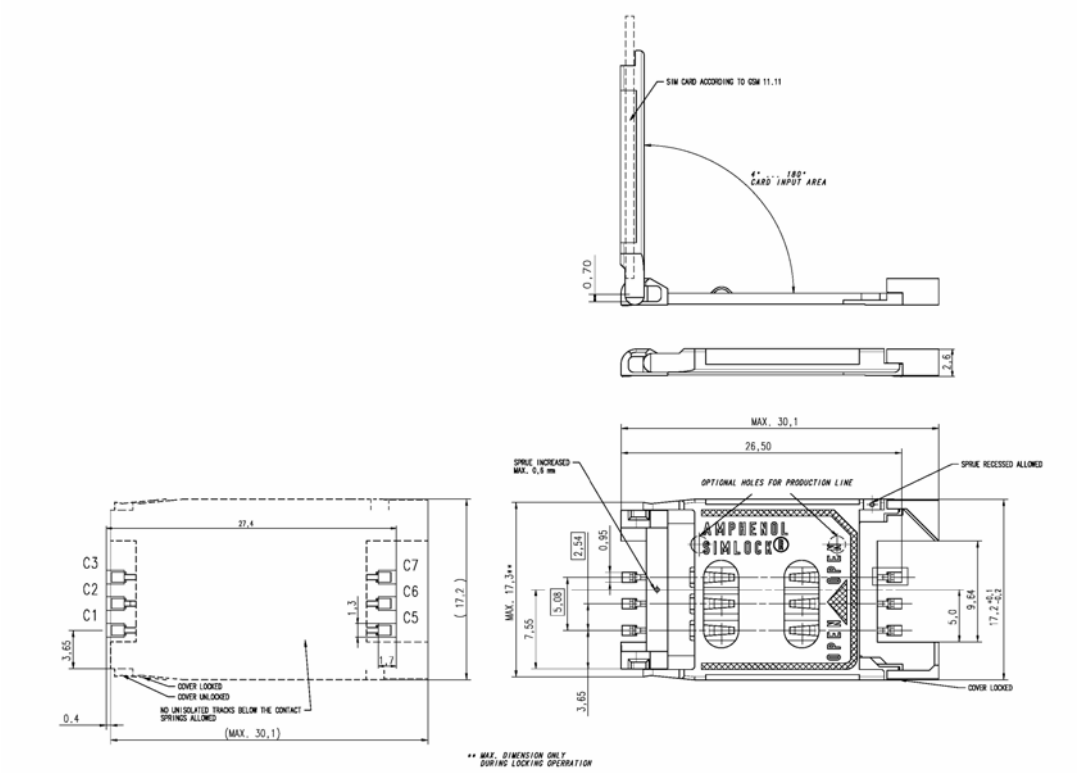

Figure 224: Amphenol SIM card socket

Table 14: Amphenol USIM socket pin description

Pin	Signal	Description
C1	USIM_VDD	USIM Card Power supply.
C2	USIM_RST	USIM Card Reset.
C3	USIM_CLK	USIM Card Clock.
C5	GND	Connect to GND.
C6	VPP	NC
C7	USIM_DATA	USIM Card data I/O.

3.8 PCM Interface

MODULE provides a PCM interface for external codec, which can be used in master mode with short sync and 16 bits linear format.

Table 15: PCM format

Characteristics	Specification
Line Interface Format	Linear(Fixed)
Data length	16bits(Fixed)
PCM Clock/Sync Source	Master Mode(Fixed)
PCM Clock Rate	2048 KHz (Fixed)
PCM Sync Format	Short sync(Fixed)
Data Ordering	MSB

Note: For more details about PCM AT commands, please refer to document [1].

3.8.1 PCM timing

MODULE supports 2.048 MHz PCM data and sync timing for 16 bits linear format codec.

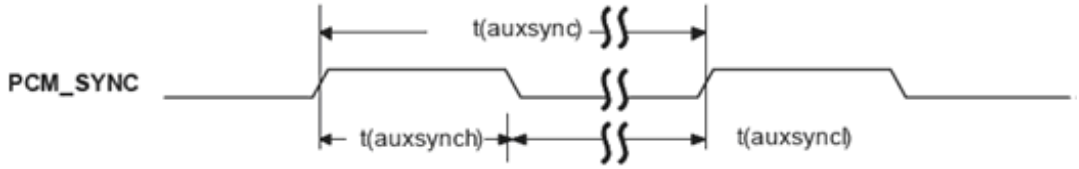

Figure 235: PCM_SYNC timing

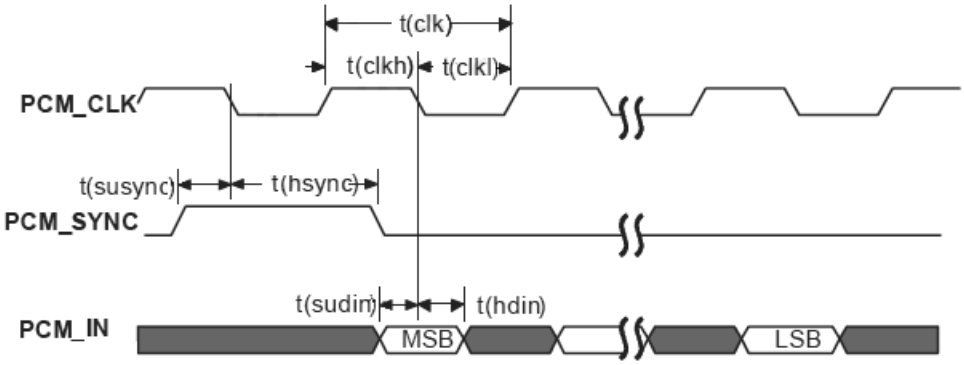

Figure 246: EXT codec to MODULE timing

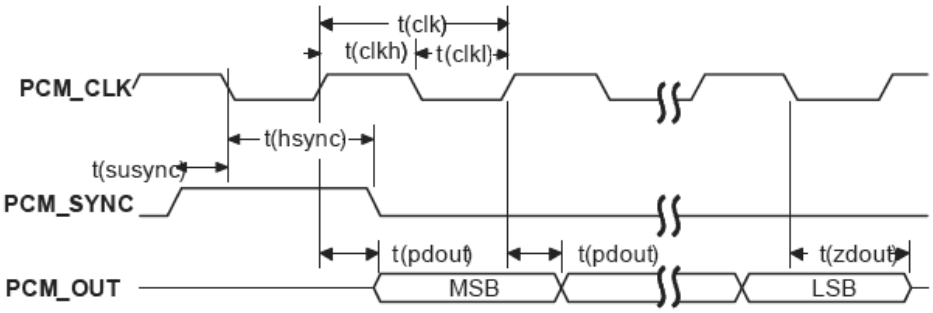

Figure 257: Module to EXT codec timing

Table 16: PCM timing parameters

Parameter	Description	Min.	Typ.	Max.	Unit
T(sync)	PCM_SYNC cycle time	–	125	–	µs
T(synch)	PCM_SYNC high level time	–	488	–	ns
T(syncl)	PCM_SYNC low level time	–	124.5	–	µs
T(clk)	PCM_CLK cycle time	–	488	–	ns
T(clkh)	PCM_CLK high level time	–	244	–	ns
T(clkl)	PCM_CLK low level time	–	244	–	ns
T(susync)	PCM_SYNC setup time high before falling edge of PCM_CLK	–	244	–	ns
T(hsync)	PCM_SYNC hold time after falling edge of PCM_CLK	–	244	–	ns
T(sudin)	PCM_IN setup time before falling edge of PCM_CLK	60	–	–	ns
T(hdin)	PCM_IN hold time after falling edge of PCM_CLK	10	–	–	ns
T(pdout)	Delay from PCM_CLK rising to PCM_OUT valid	–	–	60	ns
T(zdout)	Delay from PCM_CLK falling to PCM_OUT HIGH-Z	–	160	-	ns

3.8.2 PCM Application Guide

The following figure shows the external codec reference design.

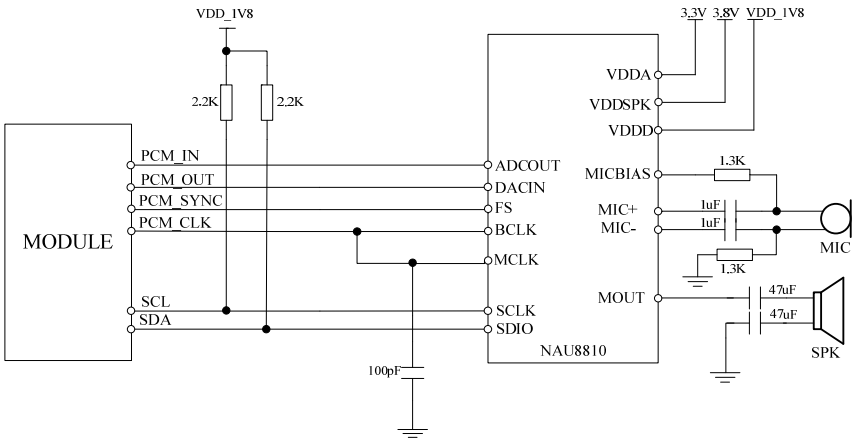

Figure 268: Audio codec reference circuit

3.9 SD Interface

MODULE provides a 4-bit SD/MMC/eMMC interface with clock rate up to 200 MHz.

When connected to a SD or MMC card, the voltage of SD interface is 1.8/2.85V, which is compatible with Secure Digital Physical Layer Specification version 3.0 and SDIO Card Specification version 3.0.It supports up to 128GB SD cards.

When connected to a eMMC card, the interface voltage will be a single 1.8V, which is compatible with eMMC Specification, version 4.5. It supports up to 128GB eMMC cards.

Table 17: SD/MMC electronic characteristic as 2.85V (SD_DATA0-3，SD_CLK and SD_CMD)

Symbol	Parameter	Min.	Typ.	Max.	Unit
V_{IH}	High-level input voltage	0.65*2.85	-	2.85+0.3	V
V_{IL}	Low-level input voltage	-0.3	0	0.25*2.85	V
V_{OH}	High-level output voltage	0.75*2.85	2.85	2.85	V
V_{OL}	Low-level output voltage	0	0	0.15*2.85	V

Table 18: SD/MMC/eMMC electronic characteristic as 1.8V (SD_DATA0-3，SD_CLK and SD_CMD)

Symbol	Parameter	Min.	Typ.	Max.	Unit
V_{IH}	High-level input voltage	0.7*1.8	-	1.8+0.2	V
V_{IL}	Low-level input voltage	-0.3	0	0.3*1.8	V
V_{OH}	High-level output voltage	1.8-0.4	1.8	1.8	V
V_{OL}	Low-level output voltage	0	0	0.45	V

Users should provide 2.85V to power SD card system and the current should more than 350mA, which is showed below as VCC_SD. ESD/EMI components should be arranged beside SD card socket. Refer to the following application circuit.

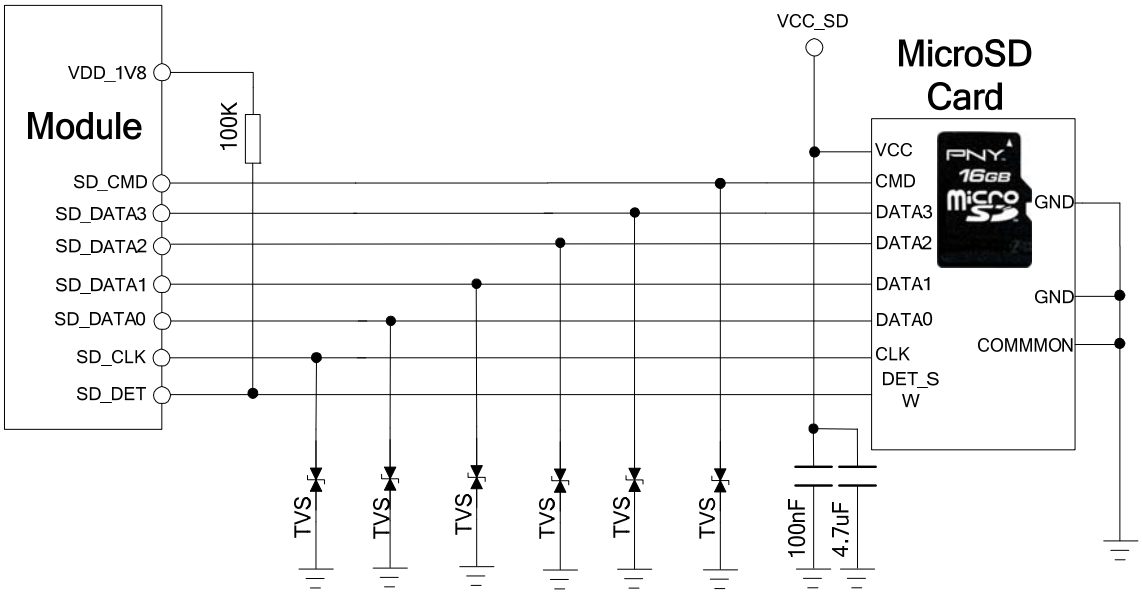

Figure29: SD reference circuit

Users should provide 2.85V to power eMMC card system and 1.8V to power the SDIO_DATA/CMD/CLK signals. The source of 2.85V should be able to provide more than 500mA* which showed below as VCC_eMMC, as the source of 1.8V should be able to provide more than 300mA* which showed below as VCCQ_1V8. ESD/EMI components should be arranged close to the eMMC card. Refer to the following application circuit.

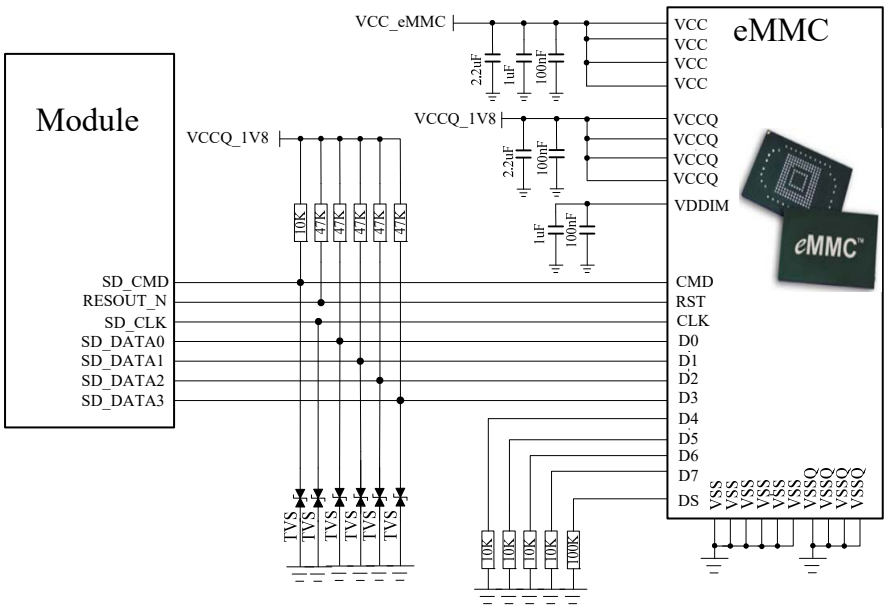

Figure 30: eMMC reference circuit

NOTE: For the current of VCC_eMMC and VCCQ_1V8, users should better refer to the

related datasheet of eMMC which is used. The listed current of 500mA and 300mA are just for your reference.

SD/MMC/eMMC card layout guide lines:

- Protect SD card signals from noisy signals (clocks, SMPS, etc.).
- Up to 200 MHz clock rate, 50 Ω nominal, ±10% trace impedance
- CLK to DATA/CMD length matching < 1 mm
- Total routing length < 50 mm
- Spacing to all other signals = 2x line width
- Bus capacitance < 10 pF

3.10 I2C Interface

MODULE provides a I2C interface compatible with I2C specification, version 5.0, with clock rate up to 400 kbps. Its operation voltage is 1.8V.

The following figure shows the I2C bus reference design.

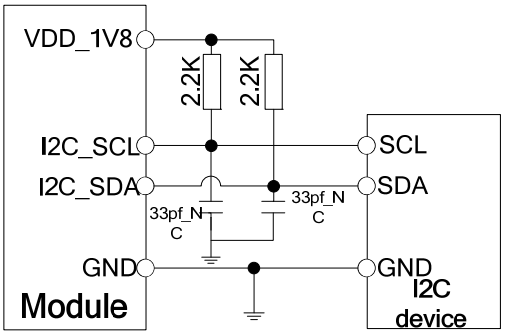

Figure31: I2C reference circuit

Note：SDA and SCL do not have pull-up resistors in MODULE. So, 2 external pull up resistors are needed in application circuit.

"AT+CRIIC and AT+CWIIC" AT commands could be used to read/write register values of the I2C peripheral devices. For more details about AT commands please refer to document [1].

3.11 SDIO Interface

MODULE provides a 4 bit 1.8V SDIO interface for WLAN solution with W58 module.
The SDIO interface can be used for WLAN solution.
Note: Special software version for CAT4 MODULEs supports this function.

3.12 SPI Interface

SIM7600NA provides a SPI interface as a master only. It provides a duplex, synchronous, serial communication link with peripheral devices. Its operation voltage is 1.8V, with clock rates up to 50 MHz

Note：For more details of the AT commands about the SPI, please refer to document [1].

3.13 Network status

The NETLIGHT pin is used to control Network Status LED, its reference circuit is shown in the following figure.

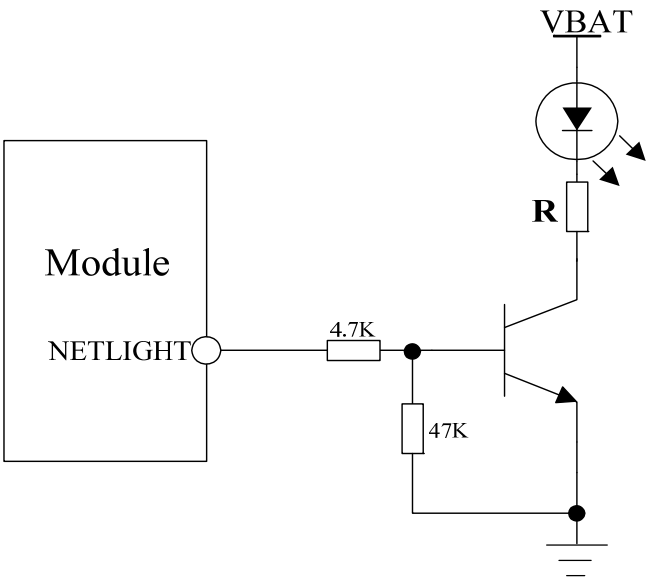

Figure32: NETLIGHT reference circuit

Note: The value of the resistor named "R" depends on the LED characteristic.

Table 19: NETLIGHT pin status

NETLIGHT pin status	Module status
Always On	Searching Network; Call Connect(include VOLTE,SRLTE)
200ms ON, 200ms OFF	Data Transmit; 4G registered;
800ms ON, 800ms OFF	2G/3G registered network
OFF	Power off ;Sleep

Note: NETLIGHT output low level as "OFF", and high level as "ON".

3.14 Flight Mode Control

The FLIGHTMODE pin can be used to control MODULE to enter or exit the Flight mode. In Flight mode, the RF circuit is closed to prevent interference with other equipments and minimize current consumption. Bidirectional ESD protection component is suggested to add on FLIGHTMODE pin, its reference circuit is shown in the following figure.

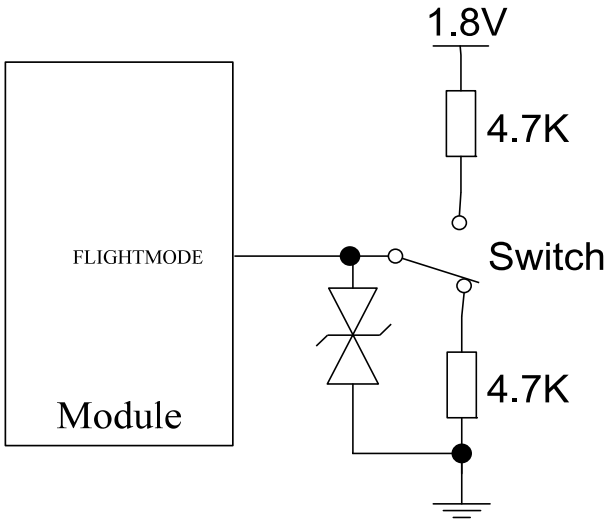

Figure 33: Flight mode switch reference circuit

Table 20: FLIGHTMODE pin status

FLIGHTMODE pin status	Module operation
Input Low Level	Flight Mode: RF is closed
Input High Level	AT+CFUN=0: RF is closed AT+CFUN=1:RF is working

3.15 Other interface

3.15.1 Sink Current Source

The ISINK pin is VBAT tolerant and intended to drive some passive devices, such as LCD backlight and white LED, etc. Its output current can be up to 40mA and be set by the AT command "AT+ CLEDITST".

Table 21: Sink current electronic characteristic

Symbol	Description	Min.	Typ.	Max.	Unit
V_{ISINK}	Voltage tolerant	0.5	-	VBAT	V
I_{ISINK}	Current tolerant	0	-	40	mA

ISINK is a ground-referenced current sink. The following figure shows its reference circuit.

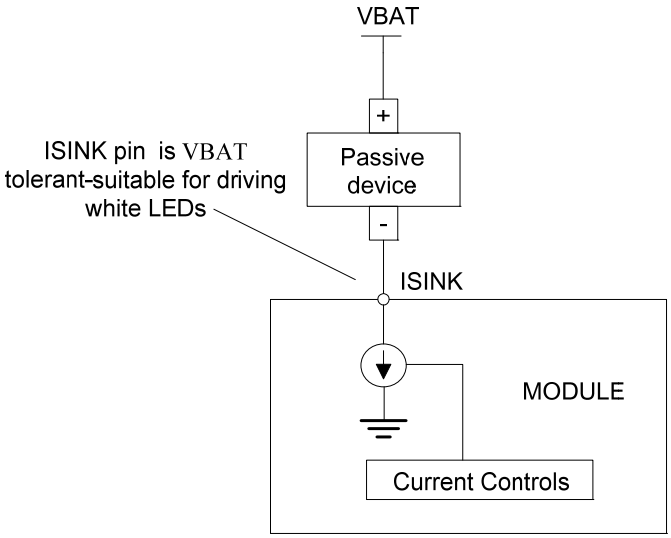

Figure34: ISINK reference circuit

Note: The sinking current can be adjusted to meet the design requirement through the AT command "AT+ CLEDITST =<0>, <value>".The "value" ranges from 0 to 8, on behalf of the current from 0mA to 40mA by 5mA step.

3.15.2 ADC

MODULE has 2 dedicated ADC pins named ADC1 and ADC2.They are available for digitizing analog signals such as battery voltage and so on. These electronic specifications are shown in the following table.

Table 22: ADC1 and ADC2 electronic characteristics

Characteristics	Min.	Typ.	Max.	Unit
Resolution	–	15	–	Bits
Conversion time	–	442	–	ms
Input Range	0.1		1.7	V
Input serial resistance	1	–	–	MΩ

Note: "AT+CADC" and "AT+CADC2" can be used to read the voltage of the ADC1 and ADC2 pins, for more details, please refer to document [1].

3.15.3 LDO

MODULE has a LDO power output, named VDD_AUX. its output voltage is 2.85V by default, Users can switch the LDO on or off by the AT command "AT+CVAUXS" and configure its output voltage by the AT command "AT+CVAUXV".

Table 23: Electronic characteristic

Symbol	Description	Min.	Typ.	Max.	Unit
V_{VDD_AUX}	Output voltage	1.7	2.85	3.05	V
I_O	Output current	-	-	150	mA

Note：For more details of AT commands about VDD_AUX, please refer to document [1].

4 RF Specifications

4.1 GSM/UMTS/LTE RF Specifications

Table 24: Conducted transmission power

Frequency	Power	Min.
LTE-FDD B2	23dBm +/-2.7dB	<-40dBm
LTE-FDD B4	23dBm +/-2.7dB	<-40dBm
LTE-FDD B5	23dBm +/-2.7dB	<-40dBm
LTE-FDD B12	23dBm +/-2.7dB	<-40dBm
LTE-FDD B13	23dBm +/-2.7dB	<-40dBm
LTE-FDD B14	23dBm +/-2.7dB	<-40dBm
LTE-FDD B25	23dBm +/-2.7dB	<-40dBm
LTE-FDD B26	23dBm +/-2.7dB	<-40dBm
LTE-FDD B71	23dBm +/-2.7dB	<-40dBm
LTE-FDD B66	23dBm +/-2.7dB	<-40dBm
LTE-TDD B41	23dBm +/-2.7dB	<-40dBm

Table 25: Operating frequencies

Frequency	Receiving	Transmission
The LTE Operating frequencies are shown in the following table 26. Note: Operating frequencies of LTE TDD B41 for the MODULE is 200MHz BW, 2496～2690 MHz		
GPS	1574.4 ～1576.44 MHz	-
GLONASS	1598 ～1606 MHz	-
BD	1559 ～1563 MHz	

Table 26: E-UTRA operating bands

E-UTRA Operating Band	Uplink (UL) operating band	Downlink (DL) operating band	Duplex Mode
2	1850~1910 MHz	1930~1990 MHz	FDD
4	1710~1755MHz	2110~2155MHz	FDD
5	824～849 MHz	869～894MHz	FDD
12	699~716MHz	728~746MHz	FDD
13	777~787MHz	746~757MHz	FDD
14	788~798MHz	758~768MHz	FDD
25	1850~1915MHz	1930~1995MHz	FDD
26	814~849MHz	859~894MHz	FDD
71	663~698MHz	617~652MHz	FDD
66	1710~1780MHz	2110~2200MHz	FDD
41	2496~2690 MHz	2496~2690 MHz	TDD

Table 27: Conducted receive sensitivity

Frequency	Receive sensitivity(Typical)	Receive sensitivity(MAX)
LTE FDD/TDD	See table 28.	3GPP

Table 28: Reference sensitivity (QPSK)

E-UTRA band	1.4 MHz Standard	3 MHz Standard	5 MHz Standard	10 MHz Standard	15 MHz Standard	20 MHz Standard	Duplex Mode
2	-102.7	-99.7	-98	-95	-93.2	-92	FDD
4	-104.7	-101.7	-100	-97	-95.2	-94	FDD
5	-103.2	-100.2	-98	-95			FDD
12	-101.7	-98.7	-97	-94			FDD
13			-97	-94			FDD
14			-97	-94			FDD
25	-101.2	-98.2	-96.5	-93.5	-91.7	-90.5	FDD
26	-102.7	-99.7	-97.5	-94.5	-92.7		FDD
71			-97.2	-94.2	-92	-87.5	FDD
66	-104.7	-101.7	-100	-97	-95.2	-94	FDD
41	-	-	-99	-96	-94.2	-93	TDD

4.2 GSM /UMTS/LTE Antenna Design Guide

Users should connect antennas to MODULE's antenna pads through micro-strip line or other types of RF trace and the trace impedance must be controlled in 50Ω. SIMCom recommends that the total insertion loss between the antenna pads and antennas should meet the following requirements:

Table 29: Trace loss

Frequency	Loss
700MHz-960MHz	<0.5dB
1710MHz-2170MHz	<0.9dB
2300MHz-2650MHz	<1.2dB

To facilitate the antenna tuning and certification test, a RF connector and an antenna matching circuit should be added. The following figure is the recommended circuit.

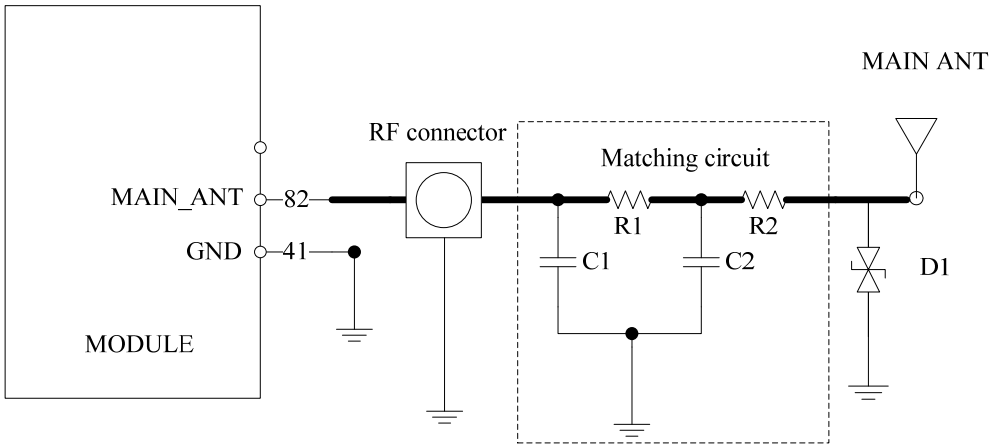

Figure35: Antenna matching circuit (MAIN_ANT)

In above figure, the components R1, C1, C2 and R2 are used for antenna matching, the values of components can only be achieved after the antenna tuning and usually provided by antenna vendor. By default, the R1, R2 are 0Ω resistors, and the C1, C2 are reserved for tuning. The component D1 is a TVS for ESD protection, and it is optional for users according to application environment.
The RF test connector is used for the conducted RF performance test, and should be placed as close as to the MODULE's MAIN_ANT pin. The traces impedance between MODULE and antenna must be controlled in 50Ω.

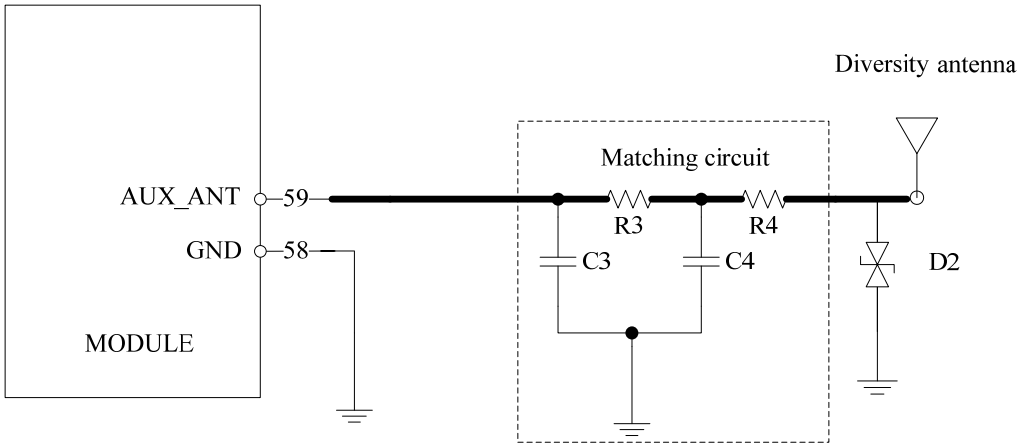

Figure 276: Antenna matching circuit (AUX_ANT)

In above figure, R3, C3, C4 and R4 are used for auxiliary antenna matching. By default, the R3, R4 are 0Ω resistors, and the C3, C4 are reserved for tuning. D2 is a TVS for ESD protection, and it is optional for users according to application environment.
Two TVS are recommended in the table below.

Table 30: Recommended TVS

Package	Part Number	Vender
0201	LXES03AAA1-154	Murata
0402	LXES15AAA1-153	Murata

Note：SIMCom suggests the LTE auxiliary antenna to be kept on, since there are many high bands in the designing of LTE-TDD, such as band38, band40 and band41. Because of the high insert loss of the RF cable and layout lines, the receiver sensitivity of these bands above will have risk to meet the authentication without the diversity antenna. For more details about auxiliary antenna design notice, please refer to document [25].

4.3 GNSS

MODULE merges GNSS (GPS/GLONASS/BD) satellite and network information to provide a high-availability solution that offers industry-leading accuracy and performance. This solution performs well, even in very challenging environmental conditions where conventional GNSS receivers fail, and provides a platform to enable wireless operators to address both location-based services and emergency mandates.

4.3.1 GNSS Technical specification

- Tracking sensitivity: -159 dBm（GPS）/-158 dBm（GLONASS）/-159 dBm（BD）
- Cold-start sensitivity: -148 dBm
- Accuracy (Open Sky): 2.5m (CEP50)
- TTFF (Open Sky) : Hot start <1s, Cold start<35s
- Receiver Type: 16-channel, C/A Code
- GPS L1 Frequency: 1575.42±1.023MHz
- GLONASS: 1597.5~1605.8 MHz
- BD: 1559.05~1563.14 MHz
- Update rate: Default 1 Hz
- GNSS data format: NMEA-0183
- GNSS Current consumption : 100mA (GSM/UMTS/LTE Sleep ,in total on VBAT pins)
- GNSS antenna: Passive/Active antenna

Note: If the antenna is active type, the power should be given by main board because there is no power supply on the GPS antenna pad. If the antenna is passive, it is suggested that the external LNA should be used.

4.3.2 GNSS Application Guide

Users can adopt an active antenna or a passive antenna to MODULE. If using a passive antenna, an external LNA is a must to get better performance.
The following figures are the reference circuits.

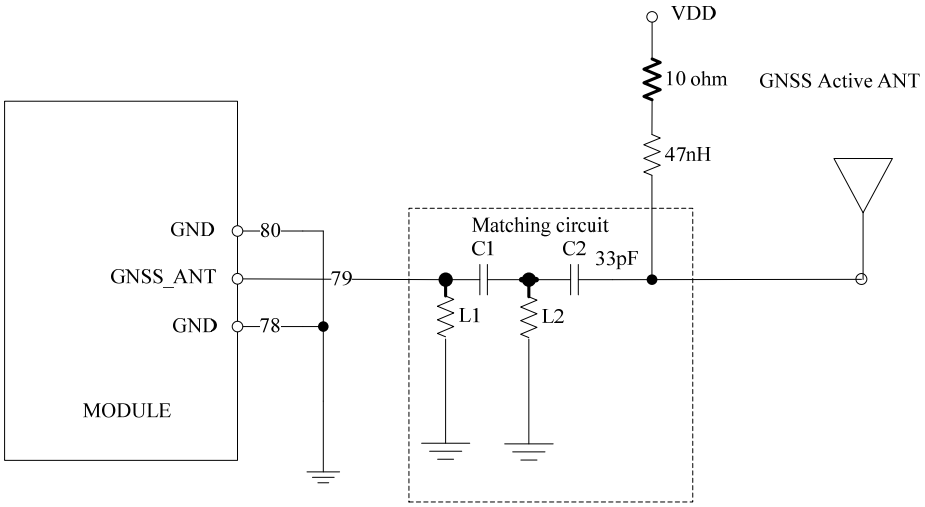

Figure 287: Active antenna circuit

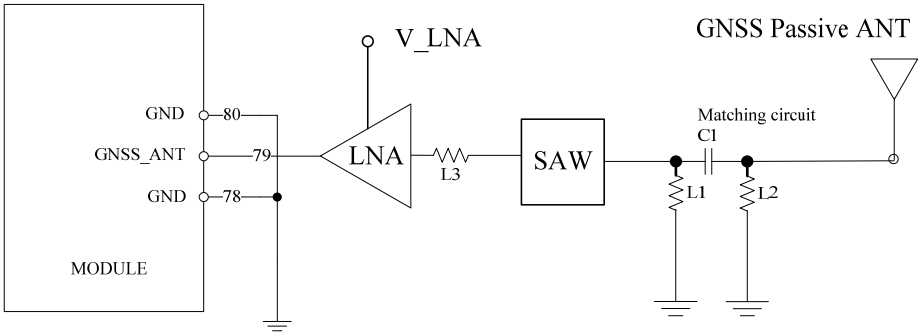

Figure 298: Passive antenna circuit (Default)

In above figures, the components C1, L1 and L2 are used for antenna matching. Usually, the values of the components can only be achieved after antenna tuning and usually provided by antenna vendor. C2 is used for DC blocking. L3 is the matching component of the external LNA, and the value of L3 is determined by the LNA characteristic and PCB layout. Both VDD of active antenna and V_LNA need external power supplies which should be considered according to active antenna and LNA characteristic. LDO/DCDC is recommended to get lower current consuming by shutting down active antennas and LNA when GNSS is not working.

GNSS can be tested by NMEA port. NMEA sentences can be obtained through UART or USB automatically. NMEA sentences include GSV, GGA, RMC, GSA, and VTG. Before using GNSS, user should configure MODULE in proper operating mode by AT command. Please refer to related documents for details. MODULE can also get position location information through AT directly.

Note: GNSS is closed by default and can be started by AT+CGPS. The AT command has two parameters, the first is on/off, and the second is GNSS mode. Default mode is standalone mode. AGPS mode needs more support from the mobile telecommunication network. Please refer to document [24] for more details.

5 Electrical Specifications

5.1 Absolute maximum ratings

Absolute maximum rating for digital and analog pins of MODULE are listed in the following table:

Table 31: Absolute maximum ratings

Parameter	Min.	Typ.	Max.	Unit
Voltage at VBAT	-0.5	-	6.0	V
Voltage at USB_VBUS	-0.5	-	5.85	V
Voltage at digital pins (RESET,SPI,Keypad,GPIO,I2C,UART,PCM)	-0.3	-	2.1	V
Voltage at digital pins (SD,USIM)	-0.3	-	3.05	V
Voltage at PWRKEY	-0.3	-	1.8	

5.2 Operating conditions

Table 32: Recommended operating ratings

Parameter	Min.	Typ.	Max.	Unit
Voltage at VBAT	3.4	3.8	4.2	V
Voltage at USB_VBUS	3.0	5.0	5.25	V

Table 33: 1.8V Digital I/O characteristics*

Parameter	Description	Min.	Typ.	Max.	Unit
V_{IH}	High-level input voltage	1.17	1.8	2.1	V
V_{IL}	Low-level input voltage	-0.3	0	0.63	V
V_{OH}	High-level output voltage	1.35	-	1.8	V
V_{OL}	Low-level output voltage	0	-	0.45	V
I_{OH}	High-level output current(no pull down resistor)	-	2	-	mA
I_{OL}	Low-level output current(no pull up resistor)	-	-2	-	mA
I_{IH}	Input high leakage current (no pull down resistor)	-	-	1	uA
I_{IL}	Input low leakage current(no pull up resistor)	-1	-	-	uA

Note: These parameters are for digital interface pins, such as SPI, GPIOs (NETLIGHT, FLIGHTMODE, STATUS, USIM_DET, SD_DET), SDIO, I2C, UART, PCM, COEXn, and BOOT_CFG0.

The operating temperature of MODULE is listed in the following table.

Table 34: Operating temperature

Parameter	Min.	Typ.	Max.	Unit
Normal operation temperature	-30	25	80	℃
Extended operation temperature*	-40	25	85	℃
Storage temperature	-45	25	+90	℃

Note: Module is able to make and receive voice calls, data calls, SMS and make GSM/ UMTX/LTE traffic in -40℃ ~ +85℃. The performance will be reduced slightly from the 3GPP specifications if the temperature is outside the normal operating temperature range and still within the extreme operating temperature range.

5.3 Operating Mode

5.3.1 Operating Mode Definition

The table below summarizes the various operating modes of MODULE product.

Table 35: Operating mode Definition

Mode		Function
Normal operation	GSM /UMTS/LTE Sleep	In this case, the current consumption of MODULE will be reduced to the minimal level and the MODULE can still receive paging message and SMS.
	GSM/UMTS/LTE Idle	Software is active. Module is registered to the network, and the MODULE is ready to communicate.
	GSM/UMTS/LTE Talk	Connection between two subscribers is in progress. In this case, the power consumption depends on network settings such as DTX off/on, FR/EFR/HR, hopping sequences, and antenna.
	GPRS/EDGE/ UMTS/LTE Standby	Module is ready for data transmission, but no data is currently sent or received. In this case, power consumption depends on network settings.
	GPRS/EDGE/ UMTS/LTE Data transmission	There is data transmission in progress. In this case, power consumption is related to network settings (e.g. power control level); uplink/downlink data rates, etc.
Minimum functionality mode		AT command “AT+CFUN=0” AT+CSCLK=1 can be used to set the MODULE to a minimum functionality mode without removing the power supply. In this mode, the RF part of the MODULE will not work and the USIM card will not be accessible, but the serial port and

	USB port are still accessible. The power consumption in this mode is lower than normal mode.
Flight mode	AT command "AT+CFUN=4" or pulling down the FLIGHTMODE pin can be used to set the MODULE to flight mode without removing the power supply. In this mode, the RF part of the MODULE will not work, but the serial port and USB port are still accessible. The power consumption in this mode is lower than normal mode.
Power off	Module will go into power off mode by sending the AT command "AT+CPOF" or pull down the PWRKEY pin, normally. In this mode the power management unit shuts down the power supply, and software is not active. The serial port and USB are is not accessible.

5.3.2 Sleep mode

In sleep mode, the current consumption of MODULE will be reduced to the minimal level, and MODULE can still receive paging message and SMS.
Several hardware and software conditions must be satisfied together in order to let MODULE enter into sleep mode:
1. UART condition
2. USB condition
3. Software condition
Note: Before designing, pay attention to how to realize sleeping/waking function and refer to Document [26] for more details.

5.3.3 Minimum functionality mode and Flight mode

Minimum functionality mode ceases a majority function of MODULE, thus minimizing the power consumption. This mode is set by the AT command which provides a choice of the functionality levels.

- AT+CFUN=0: Minimum functionality
- AT+CFUN=1: Full functionality (Default)
- AT+CFUN=4: Flight mode

If MODULE has been set to minimum functionality mode, the RF function and USIM card function will be closed. In this case, the serial port and USB are still accessible, but RF function and USIM card will be unavailable.
If MODULE has been set to flight mode, the RF function will be closed. In this case, the serial port and USB are still accessible, but RF function will be unavailable.
When MODULE is in minimum functionality or flight mode, it can return to full functionality by the AT command "AT+CFUN=1".

5.4 Current Consumption

The current consumption is listed in the table below.

Table 36: Current consumption on VBAT Pins (VBAT=3.8V)

GNSS	
GNSS supply current (AT+CFUN=0,with USB connection)	@ -140dBm，Tracking Typical:TBD
LTE sleep/idle mode	
LTE supply current (GNSS off，without USB connection)	Sleep mode Typical: TBD Idle mode Typical: TBD
LTE data	
LTE-FDD B2	@5MHz 22.1dBm Typical: TBD @10MHz 22.4dBm Typical: TBD @20MHz 22.3dBm Typical: TBD
LTE-FDD B4	@5MHz 22.0dBm Typical: TBD @10MHz 22.1dBm Typical: TBD @20MHz 22.6dBm Typical: TBD
LTE-FDD B5	@5MHz 22.2dBm Typical: TBD @10MHz 22.1dBm Typical: TBD
LTE-FDD B12	@5MHz 22.7dBm Typical: TBD @10MHz 22.7dBm Typical: TBD
LTE-FDD B13	@5MHz 21.9dBm Typical: TBD @10MHz 22.0dBm Typical: TBD
LTE-FDD B14	@5MHz 21.3dBm Typical: TBD @10MHz 22.5dBm Typical: TBD @15MHz 22.6dBm Typical: TBD
LTE-FDD B25	@5MHz 22dBm Typical: TBD @10MHz 22dBm Typical: TBD @20MHz 22dBm Typical: TBD
LTE-FDD B26	@5MHz 22.4dBm Typical: TBD @10MHz 22.7dBm Typical: TBD @15MHz 22.3dBm Typical: TBD
LTE-FDD B71	@5MHz 22.4dBm Typical: TBD @10MHz 22.5dBm Typical: TBD @20MHz 22.4dBm Typical: TBD
LTE-FDD B66	@5MHz 22dBm Typical: TBD @10MHz 22dBm Typical: TBD @20MHz 22dBm Typical: TBD
LTE-TDD B41	@5MHz 21.6dBm Typical: TBD @10MHz 21.7dBm Typical: TBD @20MHz 21.7dBm Typical: TBD

5.5 ESD Notes

MODULE is sensitive to ESD in the process of storage, transporting, and assembling. When MODULE is mounted on the users' mother board, the ESD components should be placed beside

the connectors which human body may touch, such as USIM card holder, audio jacks, switches, keys, etc. The following table shows the MODULE ESD measurement performance without any external ESD component.

Table 37: The ESD performance measurement table (Temperature: 25℃, Humidity: 45%)

Part	Contact discharge	Air discharge
VBAT,GND	TBD	TBD
Antenna port	TBD	TBD
Other PADs	TBD	TBD

6 SMT Production Guide

6.1 Top and Bottom View of MODULE

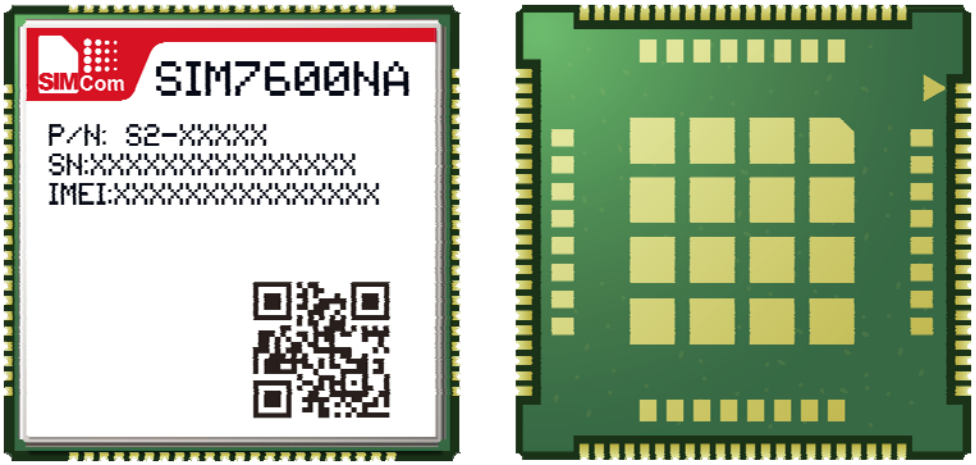

Figure 309: Top and bottom view of MODULE

6.2 Label Information

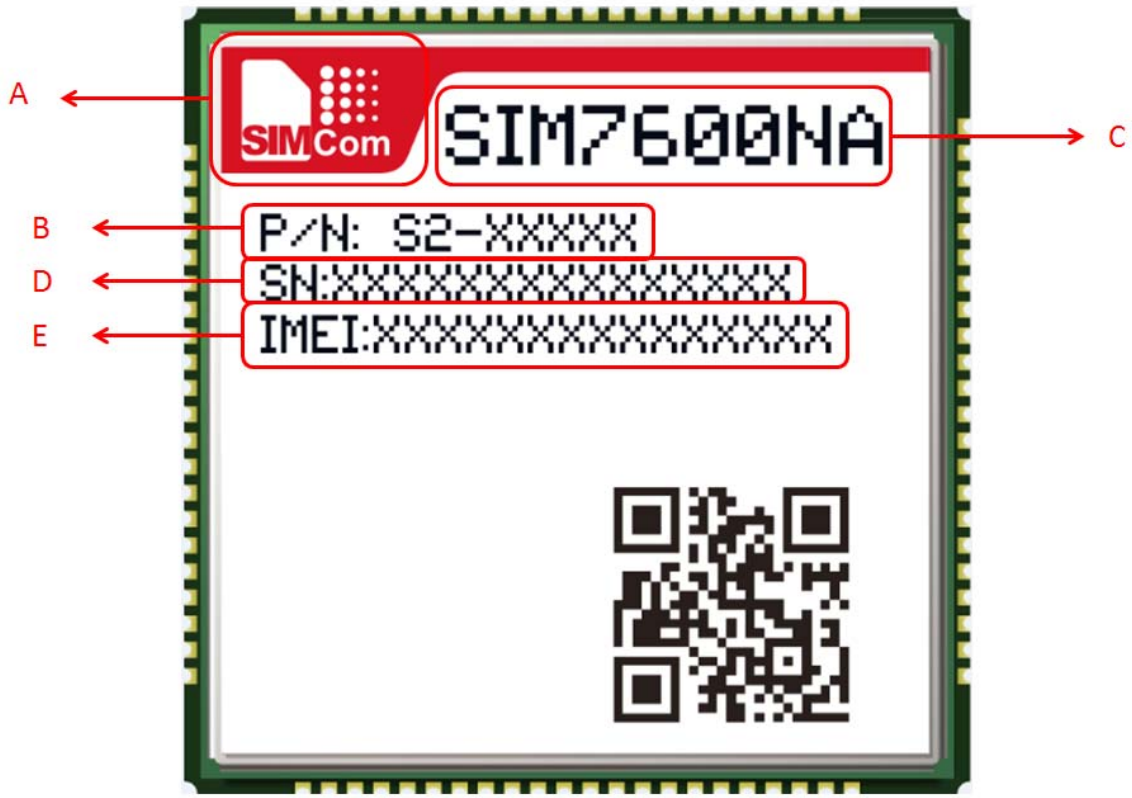

Figure 40: Label information

Table 38: The description of label information

No.	Description
A	LOGO
B	Module part number
C	Project name
D	Serial number
E	International mobile equipment identity

6.3 Typical SMT Reflow Profile

SIMCom provides a typical soldering profile. Therefore the soldering profile shown below is only

a generic recommendation and should be adjusted to the specific application and manufacturing constraints.

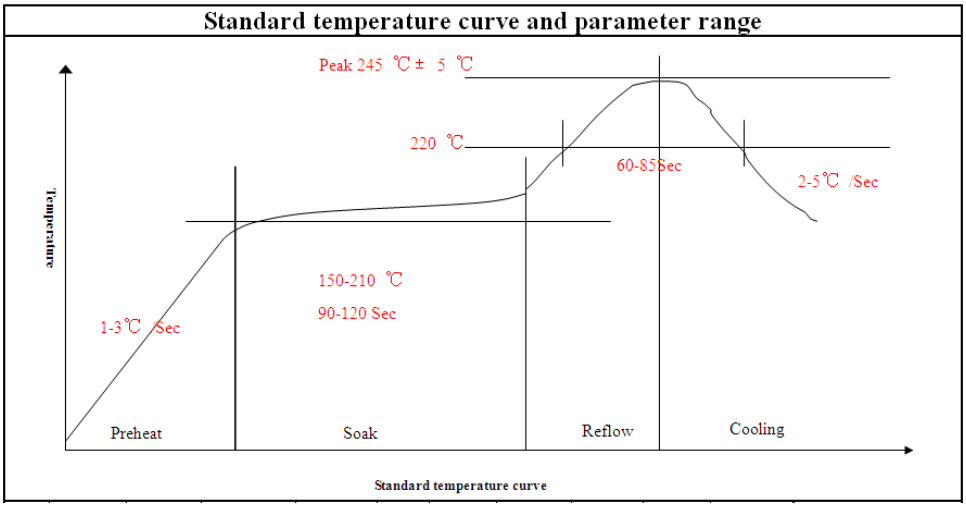

Figure41: The ramp-soak-spike reflow profile of MODULE

Note: For more details about secondary SMT, please refer to the document [21].

6.4 Moisture Sensitivity Level (MSL)

MODULE is qualified to Moisture Sensitivity Level (MSL) 3 in accordance with JEDEC J-STD-033. If the prescribed time limit is exceeded, users should bake MODULE for 192 hours in drying equipment (<5% RH) at 40+5/-0°C, or 72 hours at 85+5/-5°C. Note that plastic tray is not heat-resistant, and only can be baked at 45° C.

Table 39: Moisture Sensitivity Level and Floor Life

Moisture Sensitivity Level (MSL)	Floor Life (out of bag) at factory ambient≤30°C/60% RH or as stated
1	Unlimited at ≦30℃/85% RH
2	1 year
2a	4 weeks
3	168 hours
4	72 hours
5	48 hours
5a	24 hours
6	Mandatory bake before use. After bake, it must be reflowed within the time limit specified on the label.

NOTE: IPC / JEDEC J-STD-033 standard must be followed for production and storage.

6.5 Stencil Foil Design Recommendation

The recommended thickness of stencil foil is more than 0.15mm.

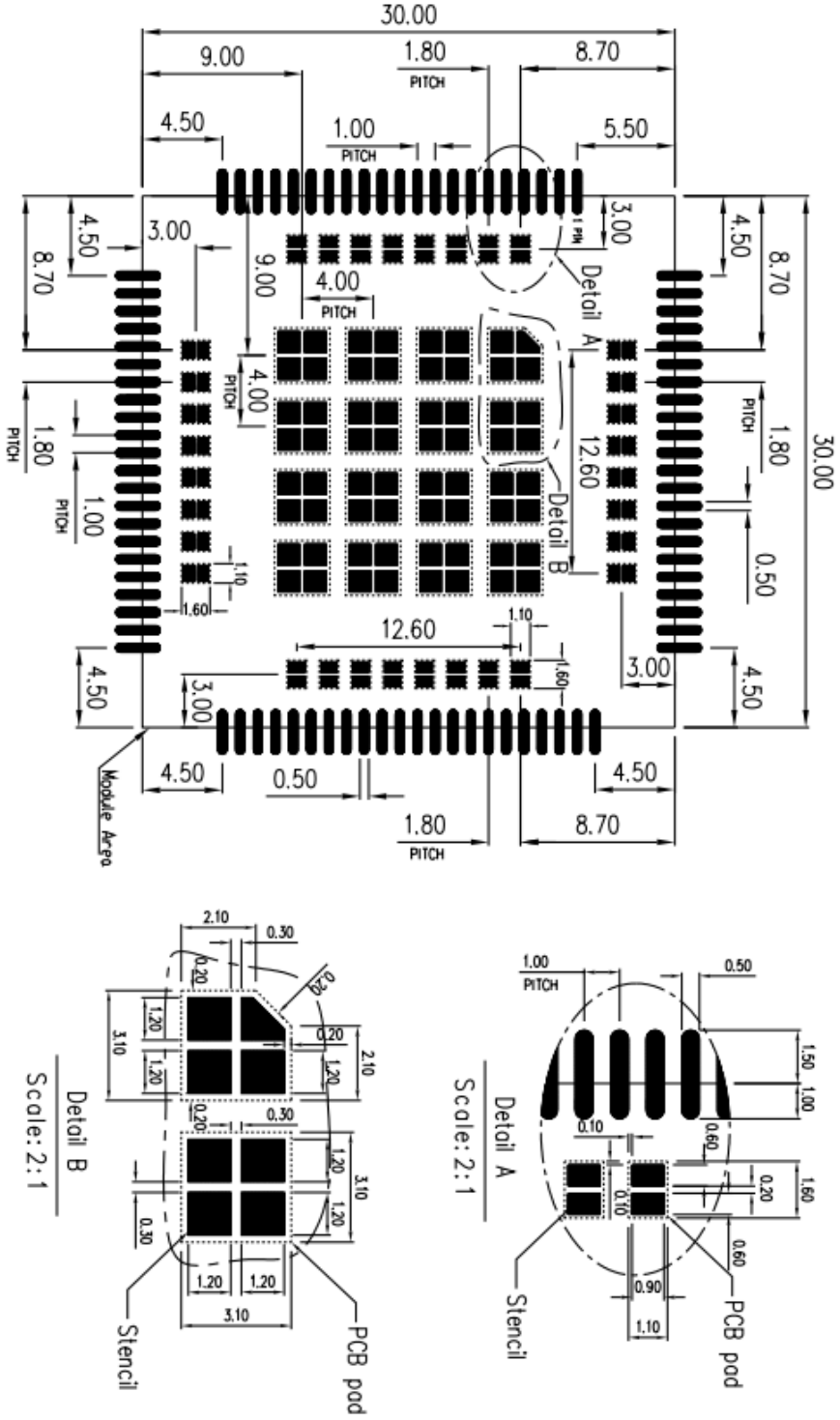

Figure 42 : Stencil Foil

7 Packaging

MODULE support tray packaging.

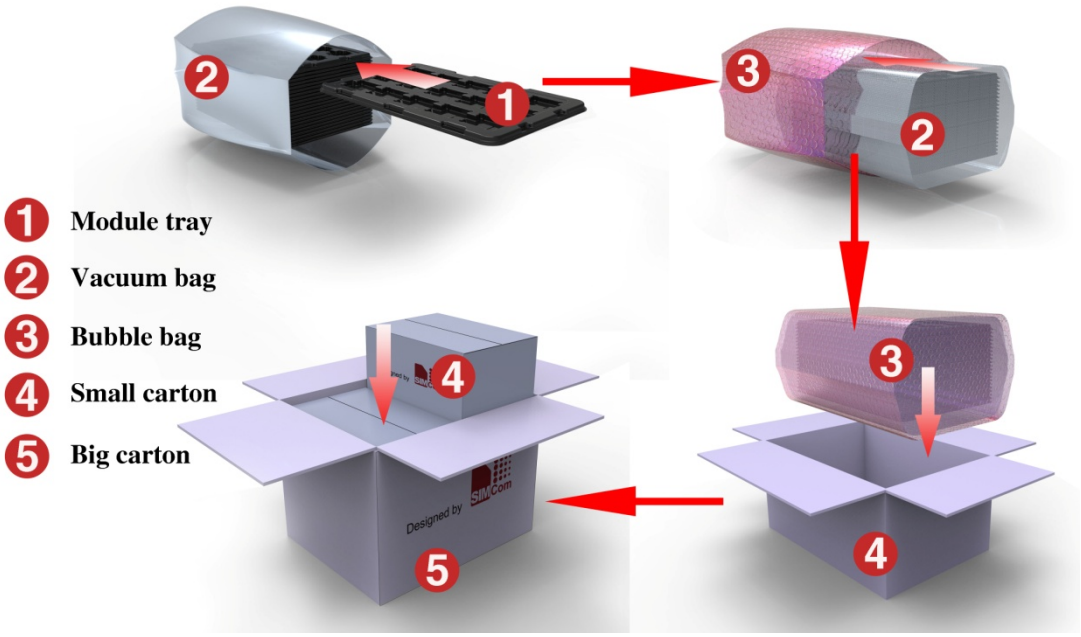

Figure43: packaging diagram

Module tray drawing：

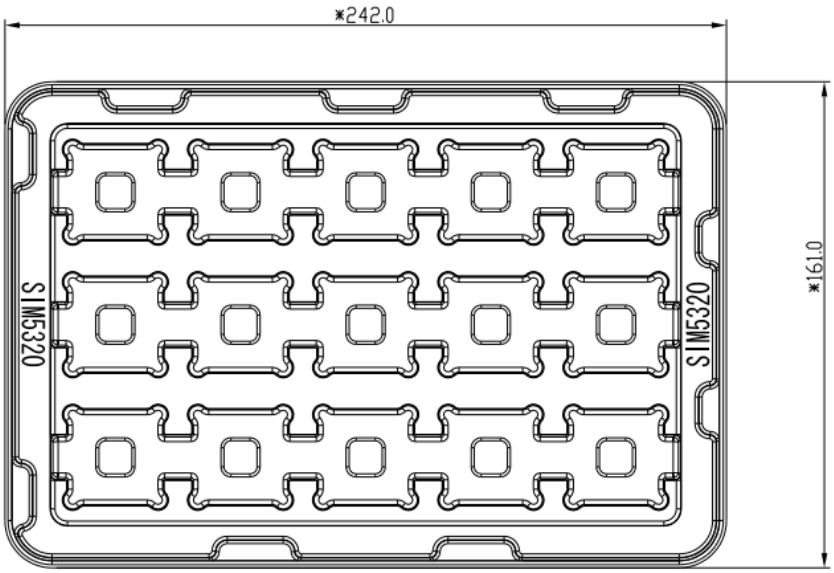

Figure 314: Tray drawing

Table 40: Tray size

Length（±3mm）	Width（±3mm）	Number
242.0	161.0	15

Small carton drawing：

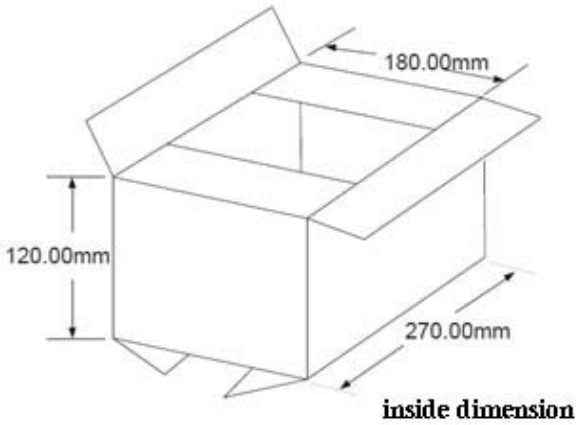

Figure 325: Small carton drawing

Table 41: Small Carton size

Length（±10mm）	Width（±10mm）	Height（±10mm）	Number
270	180	120	15*20=300

Big carton drawing：

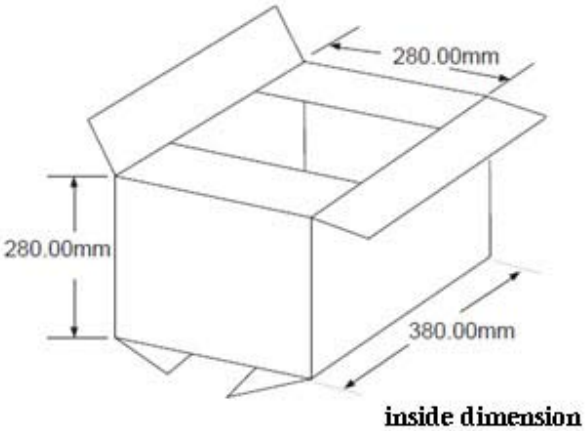

Figure 46: Big carton drawing

Table 42: Big Carton size

Length（±10mm）	Width（±10mm）	Height（±10mm）	Number

380	280	280	300*4=1200

Appendix

Ⅰ. Coding Schemes and Maximum Net Data Rates over Air Interface

Table 43: Coding Schemes and Maximum Net Data Rates over Air Interface

LTE-FDD device category (Downlink)	Max data rate（peak）	Modulation type
Category 1	10Mbps	QPSK/16QAM/64QAM
Category 2	50Mbps	QPSK/16QAM/64QAM
Category 3	100Mbps	QPSK/16QAM/64QAM
Category 4	150Mbps	QPSK/16QAM/64QAM
LTE-FDD device category (Uplink)	**Max data rate（peak）**	**Modulation type**
Category 1	5Mbps	QPSK/16QAM
Category 2	25Mbps	QPSK/16QAM
Category 3	50Mbps	QPSK/16QAM
Category 4	50Mbps	QPSK/16QAM

Ⅱ. Related Documents

Table 44: Related Documents

NO.	Title	Description
[1]	SIM7500_SIM7600 Series_AT Command Manual V1.xx	AT Command Manual
[2]	ITU-T Draft new recommendationV.25ter	Serial asynchronous automatic dialing and control
[3]	GSM 07.07	Digital cellular telecommunications (Phase 2+); AT command set for GSM Mobile Equipment (ME)
[4]	GSM 07.10	Support GSM 07.10 multiplexing protocol
[5]	GSM 07.05	Digital cellular telecommunications (Phase 2+); Use of Data Terminal Equipment – Data Circuit terminating Equipment (DTE – DCE) interface for Short Message Service (SMS) and Cell Broadcast Service (CBS)
[6]	GSM 11.14	Digital cellular telecommunications system (Phase 2+); Specification of the SIM Application Toolkit for the Subscriber Identity Module – Mobile Equipment (SIM – ME) interface
[7]	GSM 11.11	Digital cellular telecommunications system (Phase 2+);

		Specification of the Subscriber Identity Module – Mobile Equipment (SIM – ME) interface
[8]	GSM 03.38	Digital cellular telecommunications system (Phase 2+); Alphabets and language-specific information
[9]	GSM 11.10	Digital cellular telecommunications system (Phase 2)；Mobile Station (MS) conformance specification； Part 1: Conformance specification
[10]	3GPP TS 51.010-1	Digital cellular telecommunications system (Release 5); Mobile Station (MS) conformance specification
[11]	3GPP TS 34.124	Electromagnetic Compatibility (EMC) for mobile terminals and ancillary equipment.
[12]	3GPP TS 34.121	Electromagnetic Compatibility (EMC) for mobile terminals and ancillary equipment.
[13]	3GPP TS 34.123-1	Technical Specification Group Radio Access Network; Terminal conformance specification; Radio transmission and reception (FDD)
[14]	3GPP TS 34.123-3	User Equipment (UE) conformance specification; Part 3: Abstract Test Suites.
[15]	EN 301 908-02 V2.2.1	Electromagnetic compatibility and Radio spectrum Matters (ERM); Base Stations (BS) and User Equipment (UE) for IMT-2000. Third Generation cellular networks; Part 2: Harmonized EN for IMT-2000, CDMA Direct Spread (UTRA FDD) (UE) covering essential requirements of article 3.2 of the R&TTE Directive
[16]	EN 301 489-24 V1.2.1	Electromagnetic compatibility and Radio Spectrum Matters (ERM); Electromagnetic Compatibility (EMC) standard for radio equipment and services; Part 24: Specific conditions for IMT-2000 CDMA Direct Spread (UTRA) for Mobile and portable (UE) radio and ancillary equipment
[17]	IEC/EN60950-1(2001)	Safety of information technology equipment (2000)
[18]	3GPP TS 51.010-1	Digital cellular telecommunications system (Release 5); Mobile Station (MS) conformance specification
[19]	GCF-CC V3.23.1	Global Certification Forum - Certification Criteria
[20]	2002/95/EC	Directive of the European Parliament and of the Council of 27 January 2003 on the restriction of the use of certain hazardous substances in electrical and electronic equipment (RoHS)
[21]	Module secondary-SMT-UGD-V1.xx	Module secondary SMT Guidelines
[22]	SIM7X00 Series_UART_Application Note_V1.xx	This document describes how to use UART interface of SIMCom modules.
[23]	SIM7100_SIM7500_SIM7600 Series_USB AUDIO_Application Note_V1.xx	USB AUDIO Application Note
[24]	SIM7X00 Series_GPS_Application Note V1.xx	GPS Application Note
[25]	Antenna design guidelines for diversity receiver system	Antenna design guidelines for diversity receiver system

[26]	SIM7100_SIM7500_SIM7600 Sleep Mode Application Note V1.xx	Sleep Mode Application Note
[27]	7600CE-LAN-Reference Design V1.0	HSIC Application Note
[28]	SIM7600_Series_SGMII-Reference Design V1.00	SGMII Reference Design

Ⅲ. Terms and Abbreviations

Table 45: Terms and Abbreviations

Abbreviation	Description
ADC	Analog-to-Digital Converter
ARP	Antenna Reference Point
BER	Bit Error Rate
BTS	Base Transceiver Station
CS	Coding Scheme
CSD	Circuit Switched Data
CTS	Clear to Send
DAC	Digital-to-Analog Converter
DRX	Discontinuous Reception
DSP	Digital Signal Processor
DTE	Data Terminal Equipment (typically computer, terminal, printer)
DTR	Data Terminal Ready
DTX	Discontinuous Transmission
EFR	Enhanced Full Rate
EGSM	Enhanced GSM
EMC	Electromagnetic Compatibility
ESD	Electrostatic Discharge
ETS	European Telecommunication Standard
EVDO	Evolution Data Only
FCC	Federal Communications Commission (U.S.)
FD	SIM fix dialing phonebook
FDMA	Frequency Division Multiple Access
FR	Full Rate
GMSK	Gaussian Minimum Shift Keying
GNSS	Global Navigation Satellite System
GPRS	General Packet Radio Service
GPS	Global Positioning System
GSM	Global Standard for Mobile Communications
HR	Half Rate
HSPA	High Speed Packet Access
I2C	Inter-Integrated Circuit
IMEI	International Mobile Equipment Identity
LTE	Long Term Evolution
MO	Mobile Originated
MS	Mobile Station (GSM engine), also referred to as TE
MT	Mobile Terminated
NMEA	National Marine Electronics Association
PAP	Password Authentication Protocol
PBCCH	Packet Switched Broadcast Control Channel
PCB	Printed Circuit Board
PCS	Personal Communication System, also referred to as GSM 1900

RF	Radio Frequency
RMS	Root Mean Square (value)
RTC	Real Time Clock
SIM	Subscriber Identification Module
SMS	Short Message Service
SPI	serial peripheral interface
SMPS	Switched-mode power supply
TDMA	Time Division Multiple Access
TE	Terminal Equipment, also referred to as DTE
TX	Transmit Direction
UART	Universal Asynchronous Receiver & Transmitter
VSWR	Voltage Standing Wave Ratio
SM	SIM phonebook
NC	Not connect
EDGE	Enhanced data rates for GSM evolution
HSDPA	High Speed Downlink Packet Access
HSUPA	High Speed Uplink Packet Access
ZIF	Zero intermediate frequency
WCDMA	Wideband Code Division Multiple Access
VCTCXO	Voltage control temperature-compensated crystal oscillator
USIM	Universal subscriber identity module
UMTS	Universal mobile telecommunications system
UART	Universal asynchronous receiver transmitter

Ⅳ. Safety Caution

Table 46: Safety Caution

Marks	Requirements
	When in a hospital or other health care facility, observe the restrictions about the use of mobiles. Switch the cellular terminal or mobile off, medical equipment may be sensitive and not operate normally due to RF energy interference.
	Switch off the cellular terminal or mobile before boarding an aircraft. Make sure it is switched off. The operation of wireless appliances in an aircraft is forbidden to prevent interference with communication systems. Forgetting to think much of these instructions may impact the flight safety, or offend local legal action, or both.
	Do not operate the cellular terminal or mobile in the presence of flammable gases or fumes. Switch off the cellular terminal when you are near petrol stations, fuel depots, chemical plants or where blasting operations are in progress. Operation of any electrical equipment in potentially explosive atmospheres can constitute a safety hazard.
	Your cellular terminal or mobile receives and transmits radio frequency energy while switched on. RF interference can occur if it is used close to TV sets, radios, computers or other electric equipment.
	Road safety comes first! Do not use a hand-held cellular terminal or mobile when driving a vehicle, unless it is securely mounted in a holder for hands free operation. Before making a call with a hand-held terminal or mobile, park the vehicle.
	GSM cellular terminals or mobiles operate over radio frequency signals and cellular networks and cannot be guaranteed to connect in all conditions, especially with a mobile fee or an invalid SIM card. While you are in this condition and need emergent help, please remember to use emergency calls. In order to make or receive calls, the cellular terminal or mobile must be switched on and in a service area with adequate cellular signal strength. Some networks do not allow for emergency call if certain network services or phone features are in use (e.g. lock functions, fixed dialing etc.). You may have to deactivate those features before you can make an emergency call. Also, some networks require that a valid SIM card be properly inserted in the cellular terminal or mobile.

Contact us:

Shanghai SIMCom Wireless Solutions Ltd.

Add: SIM Technology Building, No.633, Jinzhong Road, Changning District, Shanghai P.R. China 200335

Tel：+86 21 3157 5100\3157 5200

URL：www.simcom.com

Antenna requirements

1. Antenna List:

   Type: Dipole antenna with non-standard SMA connector(50ohm);

   Model: MF25D

   Antenna Gain:
   Band2:1.87dBi, Band4:3.12dBi, Band5:0.91dBi,
   Band12:0.95dBi, Band13:2.23dBi, Band25:1.87dBi,
   Band26:1.40dBi, Band41:3.20dBi, Band66:3.12dBi,
   Band71:-0.48dBi

2. The user must match the MF25D antenna with the non-standard SMA connector and cannot change the antenna.

This device is intended only for OEM integrators under the following conditions: (For module device use)

1) The antenna must be installed such that 20 cm is maintained between the antenna and users, and
2) The transmitter module may not be co-located with any other transmitter or antenna.
As long as 2 conditions above are met, further transmitter test will not be required. However, the OEM integrator is still responsible for testing their end-product for any additional compliance requirements required with this module installed.

Radiation Exposure Statement
This equipment complies with IC radiation exposure limits set forth for an uncontrolled environment. This equipment should be installed and operated with minimum distance 20 cm between the radiator & your body.

Cet appareil est conçu uniquement pour les intégrateurs OEM dans les conditions suivantes:
(Pour utilisation de dispositif module)
1) L'antenne doit être installée de telle sorte qu'une distance de 20 cm est respectée entre l'antenne et les utilisateurs, et
2) Le module émetteur peut ne pas être coïmplanté avec un autre émetteur ou antenne.
Tant que les 2 conditions ci-dessus sont remplies, des essais supplémentaires sur l'émetteur ne seront pas nécessaires. Toutefois, l'intégrateur OEM est toujours responsable des essais sur son produit final pour toutes exigences de conformité supplémentaires requis pour ce module installé.

Déclaration d'exposition aux radiations:
Cet équipement est conforme aux limites d'exposition aux rayonnements ISED établies pour un environnement non contrôlé. Cet équipement doit être installé et utilisé avec un minimum de 20 cm de distance entre la source de rayonnement et votre corps.

FCC Statement

This device complies with part 15 of the FCC Rules. Operation is subject to the following two conditions:
(1) This device may not cause harmful interference, and
(2) this device must accept any interference received, including interference that may cause undesired operation.

Any Changes or modifications not expressly approved by the party responsible for compliance could void the user's authority to operate the equipment.

The modular can be installed or integrated in mobile or fix devices only. This modular cannot be installed in any portable device.

FCC Radiation Exposure Statement
This modular complies with FCC RF radiation exposure limits set forth for an uncontrolled environment. This transmitter must not be co-located or operating in conjunction with any other antenna or transmitter. This modular must be installed and operated with a minimum distance of 20 cm between the radiator and user body.

If the FCC identification number is not visible when the module is installed inside another device, then the outside of the device into which the module is installed must also display a label referring to the enclosed module. This exterior label can use wording such as the following: “Contains Transmitter Module FCC ID: 2AJYU-8PYA005 Or Contains FCC ID: 2AJYU-8PYA005”

When the module is installed inside another device, the user manual of the host must contain below warning statements;
1. This device complies with Part 15 of the FCC Rules. Operation is subject to the following two conditions:
(1) This device may not cause harmful interference.
(2) This device must accept any interference received, including interference that may cause undesired operation.
2. Changes or modifications not expressly approved by the party responsible for compliance could void the user's authority to operate the equipment.
The devices must be installed and used in strict accordance with the manufacturer's instructions as described in the user documentation that comes with the product.
Any company of the host device which install this modular with limit modular approval should perform the test of radiated emissionand spurious emission according to FCC Part 22H and 24E, 47 CFR Part 2, 22H, 24(E), 27 and 47 CFR Part 2, 22H, 24(E), 27, 90 requirement,Only if the test result comply with FCC Part 22H and 24E, 47 CFR Part 2, 22H, 24(E), 27 and 47 CFR Part 2,22H, 24(E), 27, 90 requirement, then the host can be sold legally.

IC Warning

This device complies with Industry Canada licence-exempt RSS standard(s). Operation is subject to the following two conditions:
(1) This device may not cause interference, and
(2) This device must accept any interference, including interference that may cause undesired operation of the device.

The modular can be installed or integrated in mobile or fix devices only. This modular cannot be installed in any portable device.

IC Radiation Exposure Statement
This modular complies with IC RF radiation exposure limits set forth for an uncontrolled environment. This transmitter must not be co-located or operating in conjunction with any other antenna or transmitter. This modular must be installed and operated with a minimum distance of 20 cm between the radiator and user body.

For a host manufacture's using a certified modular, if (1) the module's IC number is not visible
when installed in the host, or (2) if the host is marketed so that end users do not have straightforward commonly used methods for access to remove the module so that the IC number of the module is visible; then an additional permanent label referring to the enclosed module: "Contains Transmitter Module IC: " 23761-8PYA006" or "Contains IC: 23761-8PYA006" must be used.

Le présent appareil est conforme aux CNR d'Industrie Canada applicables aux appareils radio exempts de licence. L'exploitation est autorisée aux deux conditions suivantes:
(1) l'appareil ne doit pas produire de brouillage, et
(2) l'utilisateur de l'appareil doit accepter tout brouillage radioélectrique subi, même si le brouillage est susceptible d'en compromettre le fonctionnement

Le modular peut être installé ou intégré dans un mobile ou réparer une seule chose Installation dans n’importe quel appareil portable.

Déclaration de rayonnement IC
Ce modular complies avec des radiations émettrices de rayonnement Environnement. Ceci ne doit pas être co-localisé ou opérer avec des autres Ce modular doit être installé et obtenu avec une distance minimale de 20 cm entre les radiateurs et le corps de l’utilisateur.
Pour un hôte, on utilise un modular, si (1) le numéro de module est non visible Quand on est installé dans le serveur, or (2) si le propriétaire est commercialisé Straightforward commonly used for the access to remove travail so that the number IC en vue Le module est visible; Ensuite, le label permanent a été attribué au module: "Contient le Module IC:" 23761-8PYA006" ou "contenu IC: 23761-8PYA006" doit" be use