A company of SIM Tech

SIM7600E-H _User Manual_V1.00

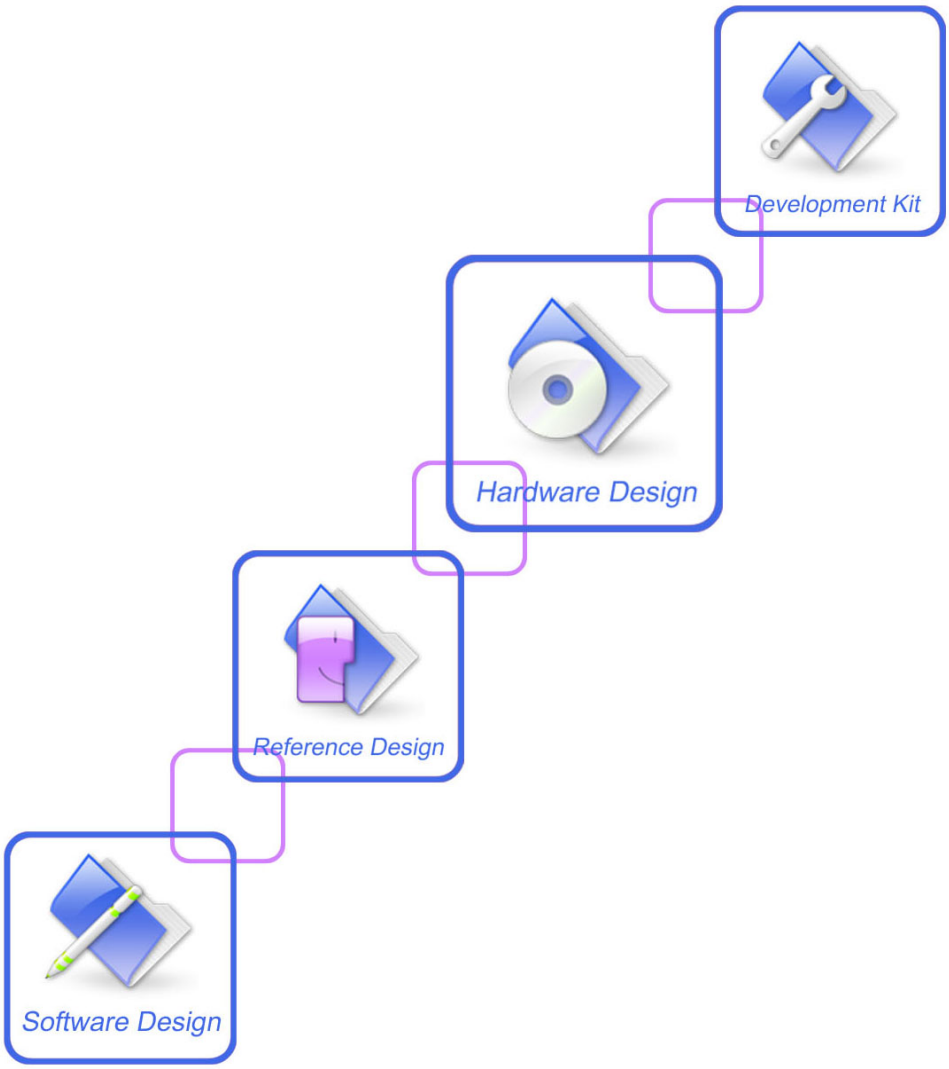

Document Title	SIM7600E-H_User Manual
Version	1.00
Date	2017-10-11
Status	Released
Document Control ID	SIM7600E-H_User Manual_V1.00

RF Exposure Statement:

For the product,under normal use condition is at least 20cm away from the b ody of the user,the user must keeping at least 20cm distance to the product.

General Notes

There are no restrictions of use SIM7500E-H module.

Note that the module was assessed for use with cables of less than 3m length and not for use in automotive environments. For RF Exposure, the module was assessed for use at more than 20 cm from the body. When installing this module permanently into a host product to create a new Radio Equipment Directive device; the manufacturer responsible for the final product must assess if the combination of this module and the host equipment complies with the essential requirements of the RE Directive 2014/53/EU."

SIMCom offers this information as a service to its customers to support the application and engineering efforts that use the products designed by SIMCom. The information provided is based on the requirements specifically from the customers. SIMCom has not undertaken any independent search for additional relevant information, including any information that may be in the customer's possession. Furthermore, the system validation of the product designed by SIMCom within a larger electronic system remains the responsibility of the customer or the customer's system integrator. All specifications supplied herein are subject to change without notice.

Copyright

This document contains the proprietary technical information which is the property of SIMCom Limited, copying of this document, giving it to others, the using or communication of the contents thereof are forbidden without the official authority by SIMCom. Offenders are liable to the payment of the damages. All rights are reserved in the event of grant of a patent or the registration of a utility model or design. All specifications supplied herein are subject to change without notice

Copyright © SIMCom Wireless Solutions Co., Ltd. 2017

Contents

Contents **3**

Table Index **5**

Revision History **7**

1 Introduction **8**
1.1 Product Outline 8
1.2 Hardware Interface Overview 9
1.3 Functional Overview 10

2 Package Information **12**
2.1 Pin Assignment Overview 12
2.2 Pin Description 14
2.3 Mechanical Information 18
2.4 Footprint Recommendation 19

3 Interface Application **20**
3.1 Power Supply 20
3.1.1 Power Supply Design Guide 21
3.1.2 Recommended Power Supply Circuit 22
3.1.3 Voltage Monitor 22
3.2 Power on/Power off/Reset Function 23
3.2.1 Power on 23
3.2.2 Power off 24
3.2.3 Reset Function 25
3.3 UART Interface 26
3.3.1 UART Design Guide 26
3.3.2 RI and DTR Behavior 27
3.4 USB Interface 28
3.5 USIM Interface 29
3.5.1 USIM Application Guide 29
3.6 PCM Interface 31
3.6.1 PCM timing 31
3.6.2 PCM Application Guide 33
3.7 SD Interface 33
3.8 I2C Interface 34
3.9 SDIO Interface 35
3.10 SPI Interface 35
3.11 Network status 35
3.12 Flight Mode Control 36
3.13 Other interface 37
3.13.1 Sink Current Source 37
3.13.2 ADC 38

3.13.3 LDO 38

4 RF Specifications 39

4.1 LTE RF Specifications 39

4.2 LTE Antenna Design Guide 41

5 Electrical Specifications 42

5.1 Absolute maximum ratings 42

5.2 Operating conditions 42

5.3 Operating Mode 43

5.3.1 Operating Mode Definition 43

5.3.2 Sleep mode 44

5.3.3 Minimum functionality mode and Flight mode 44

5.4 Current Consumption 45

5.5 ESD Notes 45

6 SMT Production Guide 46

6.1 Top and Bottom View of SIM7600E-H 46

6.2 Label Information 47

6.3 Typical SMT Reflow Profile 48

6.4 Moisture Sensitivity Level (MSL) 48

6.5 Stencil Foil Design Recommendation 49

7 Packaging 50

Appendix 52

A. Coding Schemes and Maximum Net Data Rates over Air Interface 52

B. Related Documents 53

C. Terms and Abbreviations 55

D. Safety Caution 57

Table Index

Table 1: SIM7600E-H frequency bands 8
Table 2: General features 10
Table 3: Pin definition 13
Table 4: IO parameters definition 14
Table 5: Pin description 14
Table 6: VBAT pins electronic characteristic 20
Table 7: Recommended Zener diode list 21
Table 8: Power on timing and electronic characteristic 24
Table 9: Power off timing and electronic characteristic 25
Table 10: RESET pin electronic characteristic 26
Table 11: USIM electronic characteristic in 1.8V mode (USIM_VDD=1.8V) 29
Table 12: USIM electronic characteristic 3.0V mode (USIM_VDD=2.95V) 29
Table 13: Amphenol USIM socket pin description 30
Table 14: PCM format 31
Table 15: PCM timing parameters 32
Table 16: MMC/SD electronic characteristic (SD_DATA0-SD_DATA3，SD_CLK and SD_CMD) * 33
Table 17: NETLIGHT pin status 36
Table 18: FLIGHTMODE pin status 36
Table 19: Sink current electronic characteristic 37
Table 20: ADC1 and ADC2 electronic characteristics 38
Table 21: Electronic characteristic 38
Table 22: Conducted transmission power 39
Table 23: E-UTRA operating bands 40
Table 24: Conducted receive sensitivity 40
Table 25: Reference sensitivity (QPSK) 40
Table 26: Trace loss 41
Table 27: Recommended TVS 41
Table 28: Absolute maximum ratings 42
Table 29: Recommended operating ratings 42
Table 30: 1.8V Digital I/O characteristics* 42
Table 31: Operating temperature 43
Table 32: Operating mode Definition 43
Table 33: Current consumption on VBAT Pins (VBAT=3.8V) 45
Table 34: The ESD performance measurement table (Temperature: 25℃, Humidity: 45%) 45
Table 35: The description of label information 47
Table 36: Moisture Sensitivity Level and Floor Life 48
Table 37: Tray size 51
Table 38: Small Carton size 51
Table 39: Big Carton size 51
Table 40: Coding Schemes and Maximum Net Data Rates over Air Interface 52
Table 41: Related Documents 53
Table 42: Terms and Abbreviations 55

Table 43: Safety Caution..... 57

Revision History

Data	Version	Description of change	Author
2017-10-11	1.00	Original	Ma Honggang Gao Fan

1 Introduction

This document describes the electronic specifications, RF specifications, interfaces, mechanical characteristics and testing results of the SIMCom SIM7600E-H module. With the help of this document and other software application notes/user guides, users can understand and use module to design and develop applications quickly.

1.1 Product Outline

Aimed at the Europe market, the SIM7600E-H module support FDD-LTE. Users can choose the module according to the wireless network configuration. The supported radio frequency bands are described in the following table.

Table 1: SIM7600E-H frequency bands

Standard	Frequency	SIM7600E-H
LTE-FDD	LTE-FDD B7	✓

With a small physical dimension of 30*30*2.9 mm and with the functions integrated, the SIM7600E-H module can meet almost any space requirement in users' applications, such as smart phone, PDA, industrial handheld, machine-to-machine and vehicle application, etc.

1.2 Hardware Interface Overview

The interfaces are described in detail in the next chapters include:

- **Power Supply**
- **USB Interface**
- **UART Interface**
- **MMC/SD Interface**
- **SDIO Interface**
- **USIM Interface**
- **GPIO**
- **ADC**
- **LDO Power Output**
- **Current Sink Source**
- **PCM Interface**
- **SPI Interface**
- **I2C Interface**

1.3 Functional Overview

Table 2: General features

Feature	Implementation
Power supply	Single supply voltage 3.4～4.2V
Power saving	Current in sleep mode : <5mA
Radio frequency bands	Please refer to the table 1
Data Transmission Throughput	LTE CAT 4 ： 150 Mbps (DL) LTE CAT 4 ： 50 Mbps (UL)
Antenna	LTE main antenna. LTE auxiliary antenna
SMS	MT, MO, CB, Text and PDU mode SMS storage: USIM card or ME(default) Transmission of SMS alternatively over CS or PS.
USIM interface	Support identity card: 1.8V/ 3V
USIM application toolkit	Support SAT class 3, GSM 11.14 Release 98 Support USAT
Phonebook management	Support phonebook types: DC,MC,RC,SM,ME,FD,ON,LD,EN
Audio feature	Support PCM interface Only support PCM master mode and short frame sync, 16-bit linear data formats
UART interface	A full modem serial port by default Baud rate: 300bps to 4Mbps(default:115200bps) Autobauding baud rate: 9600,19200,38400,57600,115200bps

	Can be used as the AT commands or data stream channel Support RTS/CTS hardware handshake Multiplex ability according to GSM 07.10 Multiplexer Protocol
MMC/SD	Support MMC and SD cards with 2.95 V on SD port
SDIO	Support SDIO with 1.8 V only on SDIO port
USB	USB 2.0 high speed interface
Firmware upgrade	Firmware upgrade over USB interface
Physical characteristics	Size:30*30*2.9m Weight:5.7 g
Temperature range	Normal operation temperature: -30°C to +80°C Extended operation temperature: -40°C to +85°C* Storage temperature -45°C to +90°C

2 Package Information

2.1 Pin Assignment Overview

All functions of the SIM7600E-H will be provided through 87 pads that will be connected to the customers' platform. The following Figure is a high-level view of the pin assignment of the SIM7600E-H.

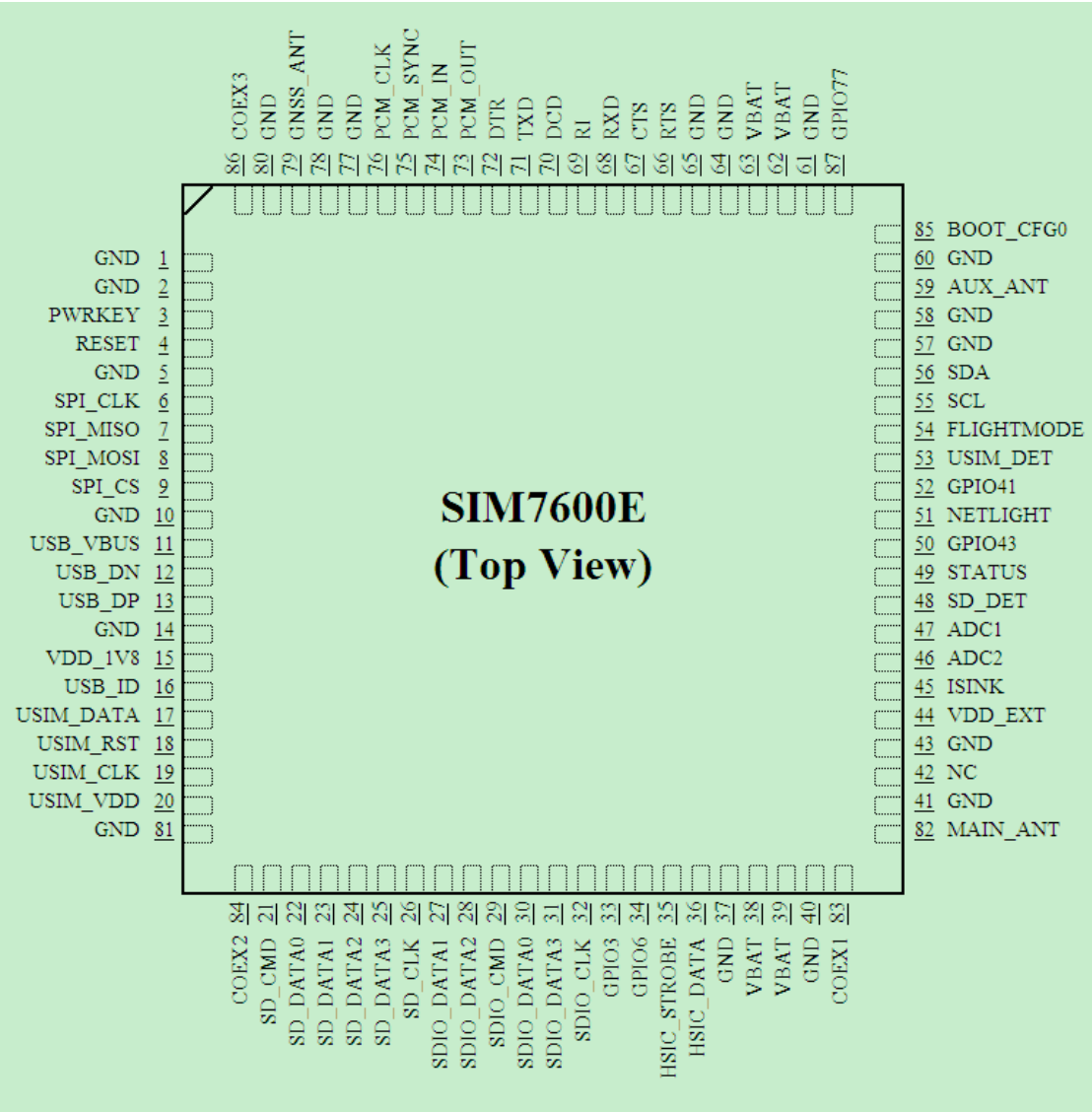

Figure 2: Pin assignment overview

Table 3: Pin definition

Pin No.	Pin name	Pin No.	Pin name
1	GND	2	GND
3	PWRKEY	4	RESET
5	GND	6	SPI_CLK
7	SPI_MISO	8	SPI_MOSI
9	SPI_CS	10	GND
11	USB_VBUS	12	USB_DN
13	USB_DP	14	GND
15	VDD_1V8	16	USB_ID
17	USIM_DATA	18	USIM_RST
19	USIM_CLK	20	USIM_VDD
21	SD_CMD	22	SD_DATA0
23	SD_DATA1	24	SD_DATA2
25	SD_DATA3	26	SD_CLK
27	SDIO_DATA1	28	SDIO_DATA2
29	SDIO_CMD	30	SDIO_DATA0
31	SDIO_DATA3	32	SDIO_CLK
33	GPIO3	34	GPIO6
35	HSIC_STROBE	36	HSIC_DATA
37	GND	38	VBAT
39	VBAT	40	GND
41	GND	42	NC (RESERVED)
43	GND	44	VDD_EXT
45	ISINK	46	ADC2
47	ADC1	48	SD_DET
49	STATUS	50	GPIO43*
51	NETLIGHT	52	GPIO41
53	USIM_DET	54	FLIGHTMODE
55	SCL	56	SDA
57	GND	58	GND
59	AUX_ANT	60	GND
61	GND	62	VBAT
63	VBAT	64	GND
65	GND	66	RTS
67	CTS	68	RXD

69	RI	70	DCD
71	TXD	72	DTR
73	PCM_OUT	74	PCM_IN
75	PCM_SYNC	76	PCM_CLK
77	GND	78	GND
79	GNSS_ANT	80	GND
81	GND	82	MAIN_ANT
83	COEX1*	84	COEX2
85	BOOT_CFG0*	86	COEX3*
87	GPIO77		

NOTE: Before the normal power up, GPIO43，COEX1, COEX3 and BOOT_CFG0 cannot be pulled up.

2.2 Pin Description

Table 4: IO parameters definition

Pin type	Description
PI	Power input
PO	Power output
AI	Analog input
AIO	Analog input/output
I/O	Bidirectional input /output
DI	Digital input
DO	Digital output
DOH	Digital output with high level
DOL	Digital output with low level
PU	Pull up
PD	Pull down

Table 5: Pin description

Pin name	Pin No.	Default status	Description	Comment
Power supply				
VBAT	38,39, 62,63	PI	Power supply, voltage range: 3.4～4.2V.	
VDD_EXT	44	PO	LDO power output for other external circuits with Max 150mA current output. Its output voltage is 0V by default.（The voltage can be configured to 2.8V by AT command）.	If unused, keep it open.

VDD_1V8	15	PO	1.8V SMPS output with Max 50mA current output for external circuit, such as level shift circuit.	If unused, keep it open.
GND	1,2,5, 10,14,37 ,40,41,4 3,57,58, 60,61,64 ,65,77,7 8,80,81		Ground	
System Control				
PWRKEY	3	DI,PU	System power on/off control input, active low.	The high voltage is 0.8V;
RESET	4	DI, PU	System reset control input, active low.	RESET has been pulled up to 1.8V via 40Kohm resistor internally.
SD interface				
SD_CMD	21	DO	SDIO command	If unused, keep them open.
SD_DATA0	22	I/O	SDIO data	
SD_DATA1	23	I/O		
SD_DATA2	24	I/O		
SD_DATA3	25	I/O		
SD_CLK	26	DO	SDIO clock	
USIM interface				
USIM_DATA	17	I/O,PU	USIM Card data I/O, which has been pulled up via a 100KR resistor to USIM_VDD internally. Do not pull it up or down externally.	All lines of USIM interface should be protected against ESD.
USIM_RST	18	DO	USIM Reset	
USIM_CLK	19	DO	USIM clock	
USIM_VDD	20	PO	Power output for USIM card, its output Voltage depends on USIM card type automatically. Its output current is up to 50mA.	
SPI interface				
SPI_CLK	6	DO	SPI clock output	Only support SPI master mode. If unused, please keep them open.
SPI_MISO	7	DI	SPI master in/slave out data	
SPI_MOSI	8	DO	SPI master out/slave in data	
SPI_CS	9	DO	SPI chip-select output	
USB				

USB_VBUS	11	DI,PD	Valid USB detection input with 3.0~5.25V detection voltage	
USB_DN	12	I/O	Negative line of the differential, bi-directional USB signal.	
USB_DP	13	I/O	Positive line of the differential, bi-directional USB signal.	
USB_ID	16	DI	High-speed USB ID input	Keep it open.
UART interface				
RTS	66	DOH	Request to send	If unused, keep them open.
CTS	67	DI,PU	Clear to Send	
RXD	68	DI,PU	Receive Data	
RI	69	DOH	Ring Indicator	
DCD	70	DOH	Carrier detects	
TXD	71	DOH	Transmit Data	
DTR	72	DI,PU	DTE get ready	
I2C interface				
SCL	55	DO	I2C clock output	If unused, keep open, or else pull them up via 4.7KΩ resistors to 1.8V.
SDA	56	I/O	I2C data input/output	
SDIO interface				
SDIO_DATA1	27	I/O	SDIO data1	For WLAN solution
SDIO_DATA2	28	I/O	SDIO data2	
SDIO_CMD	29	DO	SDIO command	
SDIO_DATA0	30	I/O	SDIO data0	
SDIO_DATA3	31	I/O	SDIO data3	
SDIO_CLK	32	DO	SDIO clock	
HSIC interface				
HSIC_STROBE	35	DO	HSIC strobe wakeup	Reserved
HSIC_DATA	36	I/O	HSIC data	
PCM interface				
PCM_OUT	73	DO	PCM data output.	If unused, please keep them open.
PCM_IN	74	DI	PCM data input.	
PCM_SYNC	75	DO	PCM data frame sync signal.	
PCM_CLK	76	DO	PCM data bit clock.	
GPIO				
NETLIGHT	51	DO	LED control output as network status indication.	If unused, keep them open. ***DO NOT PULL UP GPIO43 DURING NORMAL POWER UP!***
FLIGHTMODE	54	DI,PU	Flight Mode control input. High level(or open): Normal Mode Low level: Flight Mode	
STATUS	49	DO	Operating status output.	

			High level: Power on and firmware ready Low level: Power off	
GPIO41	52	IO	GPIO	
GPIO43	50	IO	GPIO	
GPIO3	33	IO	GPIO	
GPIO6	34	IO	GPIO	
SD_DET	48	IO	Default: GPIO Optional: SD card detecting input. H: SD card is removed L: SD card is inserted	
USIM_DET	53	IO	Default: GPIO Optional: USIM card detecting input. H: USIM is removed L: USIM is inserted	
GPIO77	87	IO	GPIO	
RF interface				
MAIN _ANT	82	AIO	MAIN antenna soldering pad	
GNSS_ANT	79	AI	GNSS antenna soldering pad	
AUX_ANT	59	AI	Auxiliary antenna soldering pad	
Other interface				
ISINK	45	PI	Ground-referenced current sink.	If unused, please keep them open.
ADC1	47	AI	Analog-digital converter input 1	
ADC2	46	AI	Analog-digital converter input 2	
COEX1	83	I/O	RF synchronizing between Wi-Fi and LTE.	If unused, keep them open. ***DO NOT PULL UP COEX1 AND COEX2 DURING NORMAL POWER UP!***
COEX2	84	I/O		
COEX3	86	I/O		
BOOT_CFG0	85	DI,PD	Boot configuration input. Module will be forced into USB download mode by connect 85 pin to VDD_1V8 during power up.	Do place 2 test points for debug. ***DO NOT PULL UP BOOT_CFG0 DURING NORMAL POWER UP!***
NC	42		No connection.	Keep it open

2.3 Mechanical Information

The following figure shows the package outline drawing of SIM7600E-H.

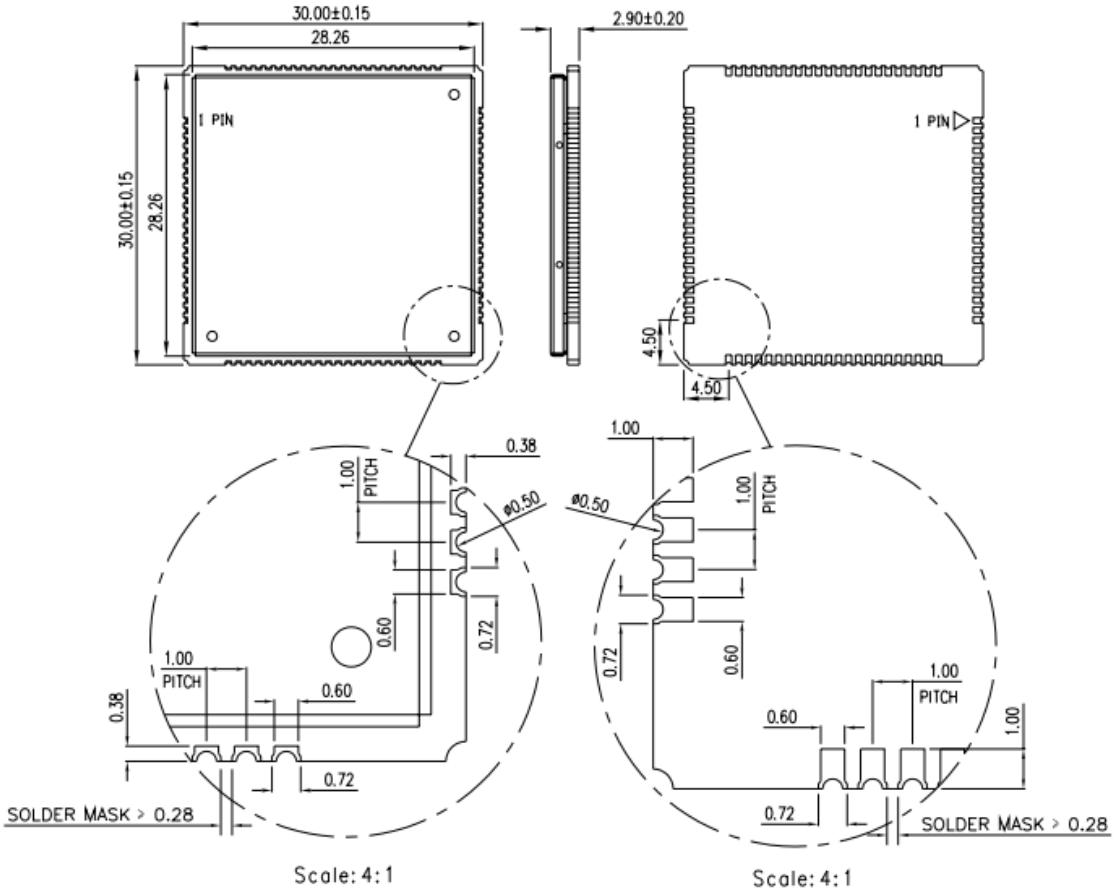

Figure 3: Dimensions (Unit: mm)

2.4 Footprint Recommendation

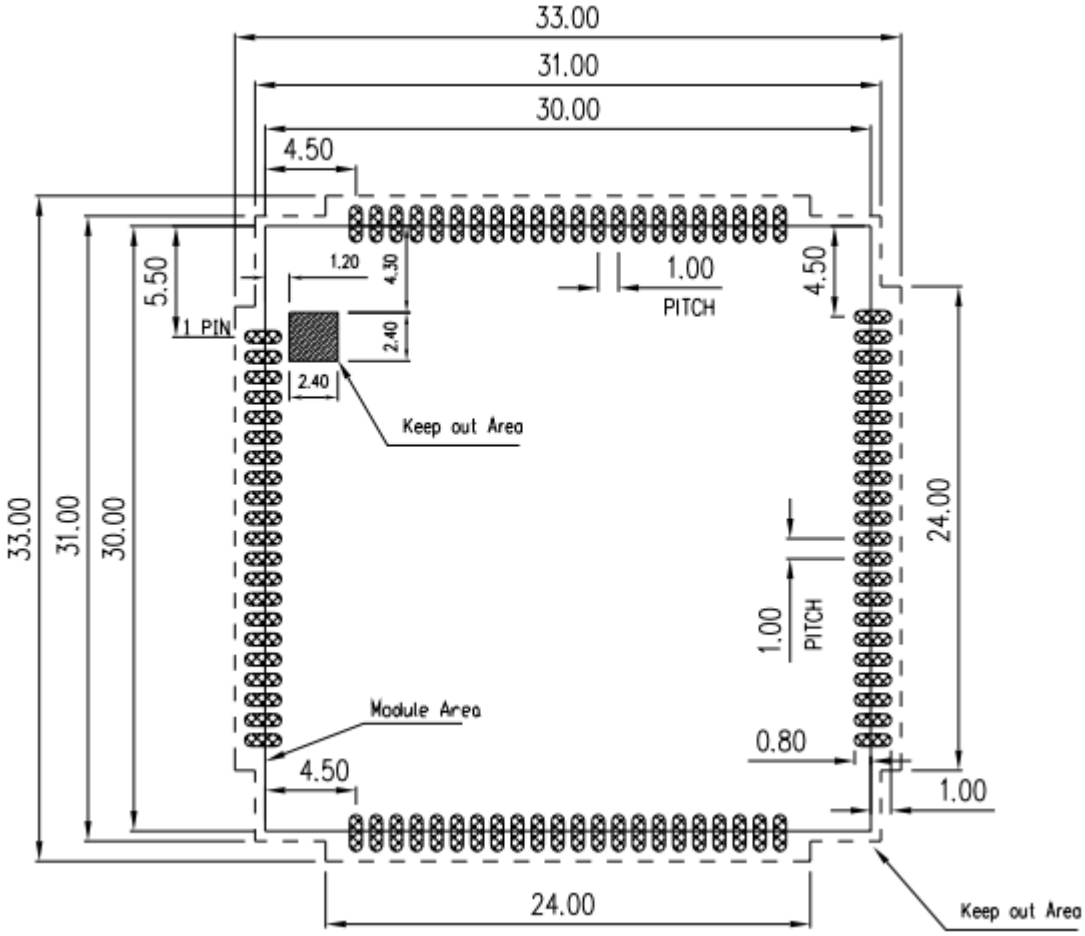

Figure 4: Footprint recommendation (Unit: mm)

3 Interface Application

3.1 Power Supply

The power supply pins of SIM7600E-H include 4 pins (pin 62&63, pin 38&39) named VBAT. The 4 VBAT pads supply the power to RF and baseband circuits directly. On VBAT pads, the ripple current up to 2A typically, So the power supply for these pads must be able to provide sufficient current up to more than 2A in order to avoid the voltage drop is more than 300mV. The following figure shows the VBAT voltage ripple wave at the maximum power transmit phase.

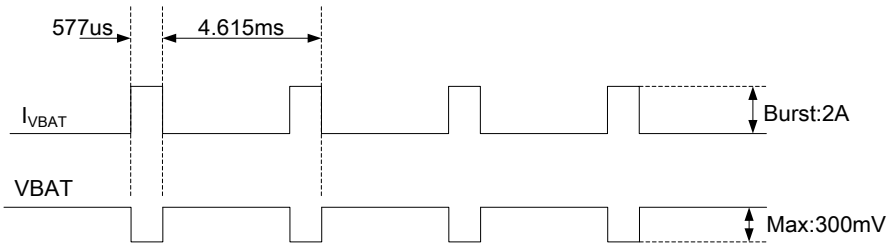

Figure 5: VBAT voltage drop during burst emission

Note: The test condition: The voltage of power supply for VBAT is 3.8V, Cd=100 µF tantalum capacitor (ESR=0.7Ω) and Cf=100nF (Please refer to Figure 6—Application circuit).

Table 6: VBAT pins electronic characteristic

Symbol	Description	Min.	Typ.	Max.	Unit
VBAT	Module power voltage	3.4	3.8	4.2	V
$I_{VBAT(peak)}$	Module power peak current in normal mode.	-	2	-	A
$I_{VBAT(average)}$	Module power average current in normal mode	Please refer to the table 34			
$I_{VBAT(sleep)}$	Power supply current in sleep mode				
$I_{VBAT(power-off)}$	Module power current in power off mode.	-	-	20	uA

3.1.1 Power Supply Design Guide

Make sure that the voltage on the VBAT pins will never drop below 3.4V, even during a transmit burst, when current consumption may rise up to 2A. If the voltage drops below 3.4V, the RF performance may be affected.

Note: If the power supply for VBAT pins can support up to 2A, using a total of more than 300uF capacitors is recommended, or else users must using a total of 1000uF capacitors typically, in order to avoid the voltage drop is more than 300mV.

Some multi-layer ceramic chip (MLCC) capacitors (0.1/1uF) with low ESR in high frequency band can be used for EMC.

These capacitors should be put as close as possible to VBAT pads. Also, users should keep VBAT trace on circuit board wider than 2 mm to minimize PCB trace impedance.

In addition, in order to guard for over voltage protection, it is suggested to use a zener diode with 5.1V reverse zener voltage and more than 500mW power dissipation.

Table 7: Recommended Zener diode list

No.	Manufacturer	Part Number	Power dissipation	Package
1	On semi	MMSZ5231BT1G	500mW	SOD123
2	Prisemi	PZ3D4V2H	500mW	SOD323
3	Vishay	MMSZ4689-V	500mW	SOD123
4	Crownpo	CDZ55C5V1SM	500mW	0805

3.1.2 Recommended Power Supply Circuit

It is recommended that a switching mode power supply or a linear regulator power supply is used. It is important to make sure that all the components used in the power supply circuit can resist a peak current up to 2A.

If there is a big voltage difference between input and output for VBAT power supply, or the efficiency is extremely important, then a switching mode power supply will be preferable. The following figure shows the switching mode power supply reference circuit.

Note: The Switching Mode power supply solution for VBAT must be chosen carefully against Electro Magnetic Interference and ripple current from depraving RF performance.

3.1.3 Voltage Monitor

To monitor the VBAT voltage, the AT command “AT+CBC” can be used.
For monitoring the VBAT voltage outside or within a special range, the AT command “AT+CVALARM” can be used to enable the under-voltage warning function.
If users need to power off SIM7600E-H, when the VBAT voltage is out of a range, the AT command “AT+CPMVT” can be used to enable under-voltage power-off function.
Note: Under-voltage warning function and under-voltage power-off function are disabled by default. For more information about these AT commands, please refer to Document [1].

3.2 Power on/Power off/Reset Function

3.2.1 Power on

SIM7600E-H can be powered on by pulling the PWRKEY pin down to ground.
The PWRKEY pin has been pulled up with a diode to 1.8V internally, so it does not need to be pulled up externally. It is strongly recommended to put a100nF capacitor, an ESD protection diode, close to the PWRKEY pin as it would strongly enhance the ESD performance of PWRKEY pin.

Note: Module could be automatically power on by connecting PWRKEY pin to ground via 0R resistor directly.

The power-on scenarios are illustrated in the following figure.

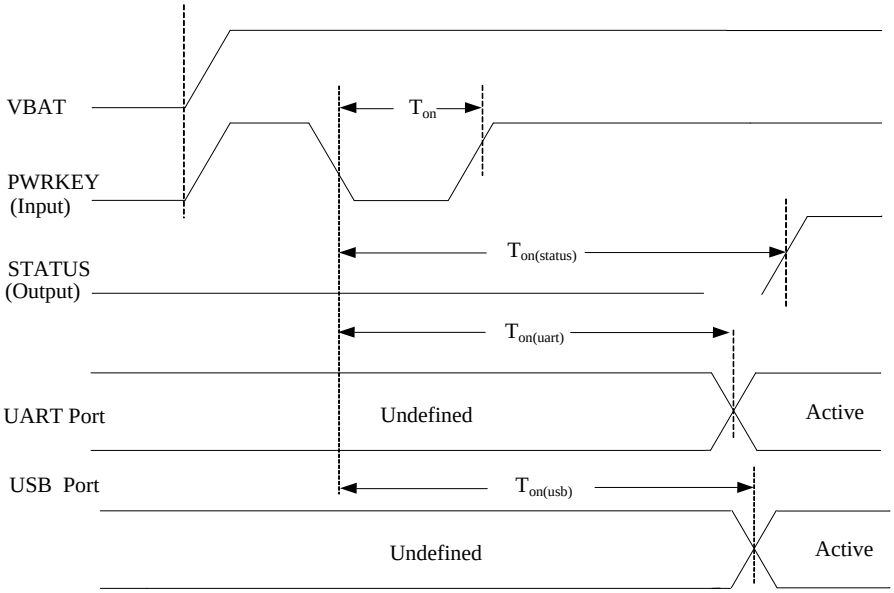

Figure 10: Power on timing sequence

Table 8: Power on timing and electronic characteristic

Symbol	Parameter	Min.	Typ.	Max.	Unit
T_{on}	The time of active low level impulse of PWRKEY pin to power on module	100	500	-	ms
$T_{on(status)}$	The time from power-on issue to STATUS pin output high level(indicating power up ready)	12	13	-	s
$T_{on(uart)}$	The time from power-on issue to UART port ready	11	12	-	s
$T_{on(usb)}$	The time from power-on issue to USB port ready	11	12	-	s
V_{IH}	Input high level voltage on PWRKEY pin	0.6	0.8	1.8	V
V_{IL}	Input low level voltage on PWRKEY pin	-0.3	0	0.5	V

3.2.2 Power off

The following methods can be used to power off SIM7600E-H.

- Method 1: Power off SIM7600E-H by pulling the PWRKEY pin down to ground.
- Method 2: Power off SIM7600E-H by AT command “AT+CPOF”.
- Method 3: over-voltage or under-voltage automatic power off. The voltage range can be set by AT command “AT+CPMVT”.
- Method 4: over-temperature or under-temperature automatic power off.

Note: If the temperature is outside the range of -30~+80 ℃, some warning will be reported via AT port. If the temperature is outside the range of -40~+85 ℃, SIM7600E-H will be powered off automatically.

For details about “AT+CPOF” and “AT+CPMVT”, please refer to Document [1].

These procedures will make modules disconnect from the network and allow the software to enter a safe state, and save data before module be powered off completely.

The power off scenario by pulling down the PWRKEY pin is illustrated in the following figure.

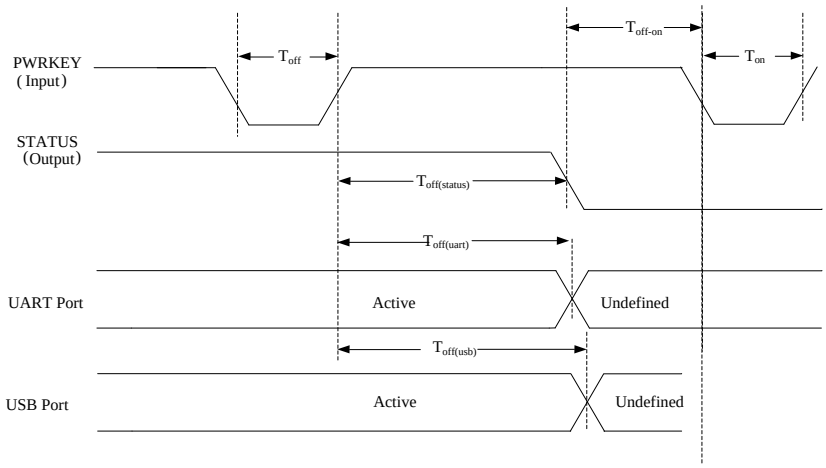

Figure 11: Power off timing sequence

Table 9: Power off timing and electronic characteristic

Symbol	Parameter	Time value			Unit
		Min.	Typ.	Max.	
T_{off}	The active low level time pulse on PWRKEY pin to power off module	2.5	--	--	s
$T_{off(status)}$	The time from power-off issue to STATUS pin output low level(indicating power off)*	25	26	-	s
$T_{off(uart)}$	The time from power-off issue to UART port off	14	15	-	s
$T_{off(usb)}$	The time from power-off issue to USB port off	27	28	-	s
T_{off-on}	The buffer time from power-off issue to power-on issue	0	-	-	s

Note: The STATUS pin can be used to detect whether module is powered on or not. When module has been powered on and firmware goes ready, STATUS will be high level, or else STATUS will still low level.

3.2.3 Reset Function

SIM7600E-H can be reset by pulling the RESET pin down to ground.

Note: This function is only used as an emergency reset, when AT command "AT+CPOF" and the PWRKEY pin all have lost efficacy.

The RESET pin has been pulled up with a 40KΩ resistor to 1.8V internally, so it does not need to be pulled up externally. It is strongly recommended to put a100nF capacitor and an ESD protection diode close to the RESET pin.

Table 10: RESET pin electronic characteristic

Symbol	Description	Min.	Typ.	Max.	Unit
T_{reset}	The active low level time impulse on RESET pin to reset module	50	100	500	ms
V_{IH}	Input high level voltage	1.17	1.8	2.1	V
V_{IL}	Input low level voltage	-0.3	0	0.8	V

3.3 UART Interface

SIM7600E-H provides a 7-wire UART (universal asynchronous serial transmission) interface as DCE (Data Communication Equipment). AT commands and data transmission can be performed through UART interface.

3.3.1 UART Design Guide

The following figures show the reference design.

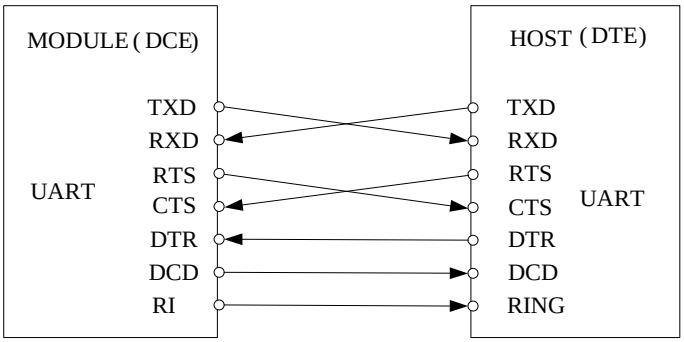

Figure 13: UART full modem

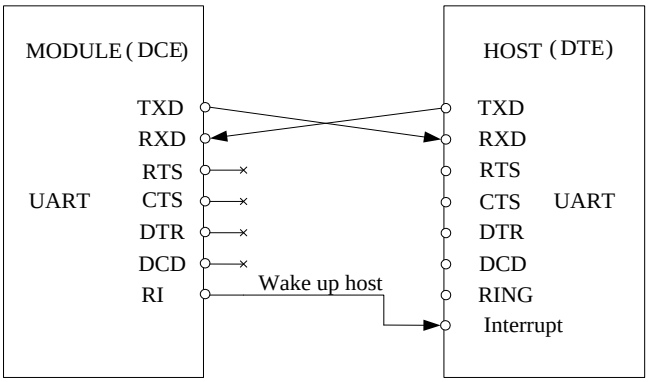

Figure 14: UART null modem

The SIM7600E-H UART is 1.8V voltage interface. If user's UART application circuit is 3.3V voltage interface, the level shifter circuits should be used for voltage matching. The TXB0108RGYR provided by Texas Instruments is recommended.

To comply with RS-232-C protocol, the RS-232-C level shifter chip should be used to connect SIM7600E-H to the RS-232-C interface, for example SP3238ECA, etc.

Note: SIM7600E-H supports the following baud rates: 300, 600, 1200, 2400, 4800, 9600, 19200, 38400, 57600, 115200, 230400, 460800, 921600, 3200000, 3686400, 4000000bps. The default band rate is 115200bps.

3.3.2 RI and DTR Behavior

The RI pin can be used to interrupt output signal to inform the host controller such as application CPU.

Normally RI will keep high level until certain conditions such as receiving SMS, or a URC report coming, and then it will change to low level. It will stay low until the host controller clears the interrupted event with “AT+CRIRS” AT command.

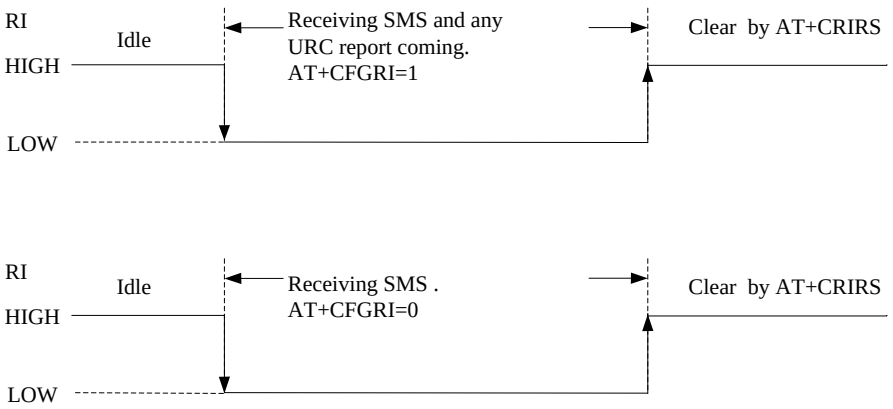

Figure 16: RI behaviour（SMS and URC report）

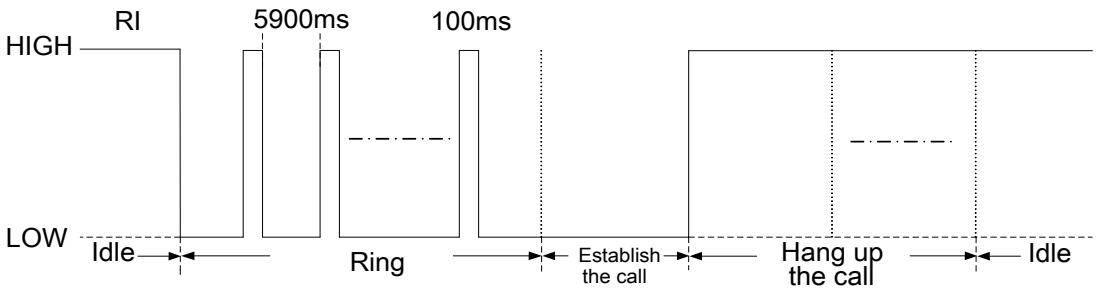

Figure 17: RI behaviour（voice call）

Note: For more details of AT commands about UART, please refer to document [1] and [22]. DTR pin can be used to wake SIM7600E-H from sleep. When SIM7600E-H enters sleep mode, pulling down DTR can wake SIM7600E-H.

3.4 USB Interface

The SIM7600E-H contains a USB interface compliant with the USB2.0 specification as a peripheral, but the USB charging function is not supported.

SIM7600E-H can be used as a USB device. SIM7600E-H supports the USB suspend and resume mechanism which can reduce power consumption. If there is no data transmission on the USB bus, SIM7600E-H will enter suspend mode automatically, and will be resumed by some events such as voice call, receiving SMS, etc.

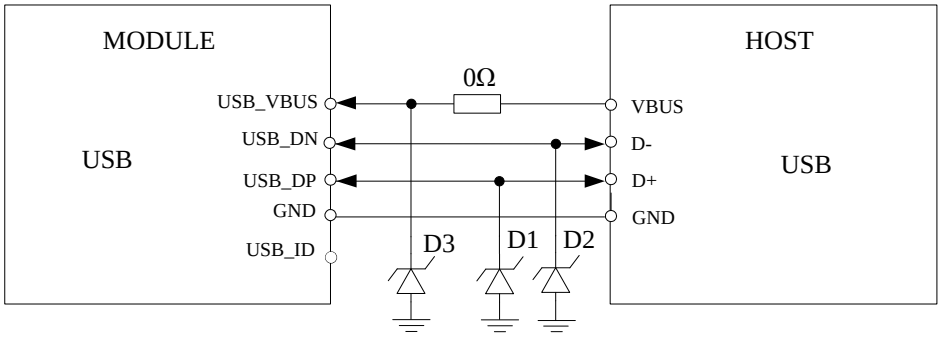

Figure 18: USB reference circuit

Because of the high bit rate on USB bus, more attention should be paid to the influence of the junction capacitance of the ESD component on USB data lines. Typically, the capacitance should be less than 1pF. It is recommended to use an ESD protection component such as ESD9L5.0ST5G provided by On Semiconductor (www.onsemi.com).

D3 is suggested to select the diode with anti-ESD and voltage surge function, or customer could add a ZENER diode for surge clamping. The recommend diodes please refer to table 7.

Note：The USB_DN and USB_DP nets must be traced by 90Ohm+/-10% differential impedance.

3.5 USIM Interface

SIM7600E-H supports both 1.8V and 3.0V USIM Cards.

Table 11: USIM electronic characteristic in 1.8V mode (USIM_VDD=1.8V)

Symbol	Parameter	Min.	Typ.	Max.	Unit
USIM_VDD	LDO power output voltage	1.75	1.8	1.95	V
V_{IH}	High-level input voltage	0.65*USIM_VDD	-	USIM_VDD +0.3	V
V_{IL}	Low-level input voltage	-0.3	0	0.35*USIM_VDD	V
V_{OH}	High-level output voltage	USIM_VDD -0.45	-	USIM_VDD	V
V_{OL}	Low-level output voltage	0	0	0.45	V

Table 12: USIM electronic characteristic 3.0V mode (USIM_VDD=2.95V)

Symbol	Parameter	Min.	Typ.	Max.	Unit
USIM_VDD	LDO power output voltage	2.75	2.95	3.05	V
V_{IH}	High-level input voltage	0.65*USIM_VDD	-	USIM_VDD +0.3	V
V_{IL}	Low-level input voltage	-0.3	0	0.25*USIM_VDD	V
V_{OH}	High-level output voltage	USIM_VDD -0.45	-	USIM_VDD	V
V_{OL}	Low-level output voltage	0	0	0.45	V

3.5.1 USIM Application Guide

It is recommended to use an ESD protection component such as ESDA6V1W5 produced by ST (www.st.com) or SMF15C produced by ON SEMI (www.onsemi.com). Note that the USIM peripheral circuit should be close to the USIM card socket.

Note: USIM_DATA has been pulled up with a 100KΩ resistor to USIM_VDD in module. A 100nF capacitor on USIM_VDD is used to reduce interference. For more details of AT commands about USIM, please refer to document [1].USIM_CLK is very important signal, the rise time and fall time of USIM_CLK should be less than 40ns, otherwise the USIM card might not be initialized correctly.

Recommended USIM Card Holder

It is recommended to use the 6-pin USIM socket such as C707 10M006 512 produced by Amphenol. User can visit http://www.amphenol.com for more information about the holder.

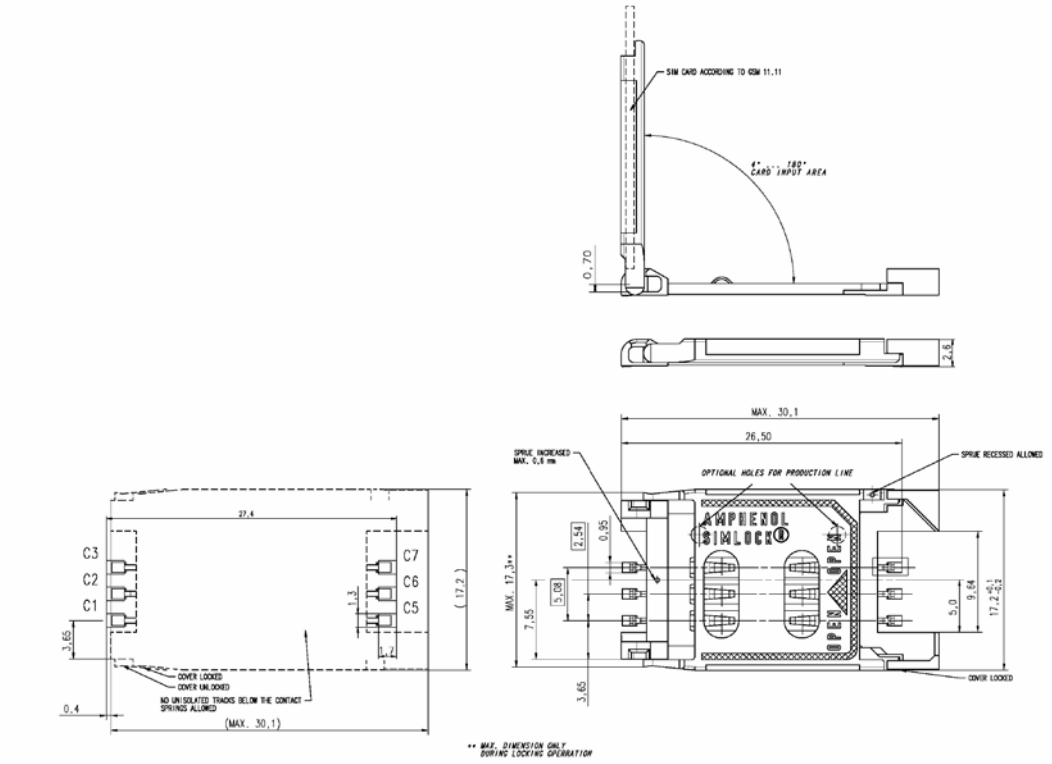

Figure 20: Amphenol SIM card socket

Table 13: Amphenol USIM socket pin description

Pin	Signal	Description
C1	USIM_VDD	USIM Card Power supply.
C2	USIM_RST	USIM Card Reset.
C3	USIM_CLK	USIM Card Clock.
C5	GND	Connect to GND.
C6	VPP	
C7	USIM_DATA	USIM Card data I/O.

3.6 PCM Interface

SIM7600E-H provides a PCM interface for external codec, which can be used in master mode with short sync and 16 bits linear format.

Table 14: PCM format

Characteristics	Specification
Line Interface Format	Linear(Fixed)
Data length	16bits(Fixed)
PCM Clock/Sync Source	Master Mode(Fixed)
PCM Clock Rate	2048 KHz (Fixed)
PCM Sync Format	Short sync(Fixed)
Data Ordering	MSB

Note: For more details about PCM AT commands, please refer to document [1].

3.6.1 PCM timing

SIM7600E-H supports 2.048 MHz PCM data and sync timing for 16 bits linear format codec.

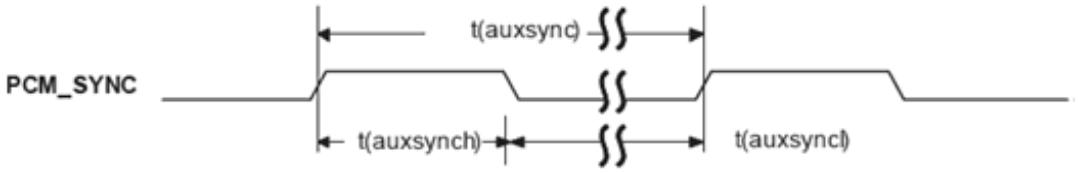

Figure 21: PCM_SYNC timing

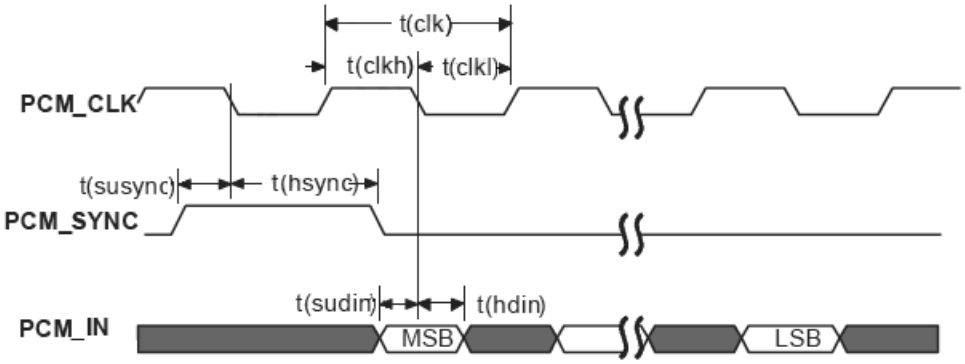

Figure 22: EXT codec to module timing

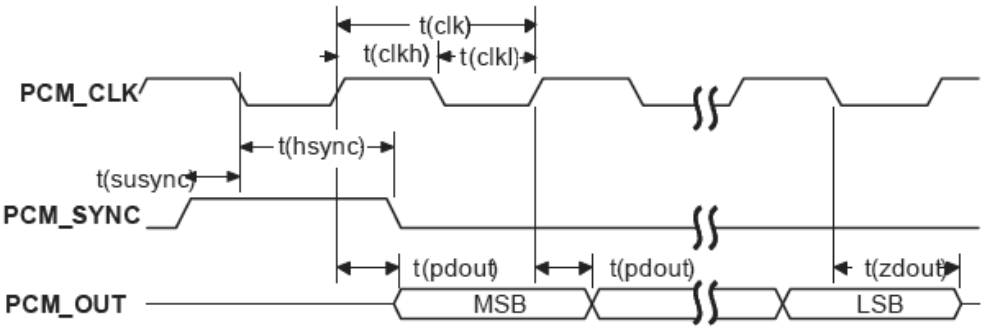

Figure 23: Module to EXT codec timing

Table 15: PCM timing parameters

Parameter	Description	Min.	Typ.	Max.	Unit
T(sync)	PCM_SYNC cycle time	–	125	–	µs
T(synch)	PCM_SYNC high level time	–	488	–	ns
T(syncl)	PCM_SYNC low level time	–	124.5	–	µs
T(clk)	PCM_CLK cycle time	–	488	–	ns
T(clkh)	PCM_CLK high level time	–	244	–	ns
T(clkl)	PCM_CLK low level time	–	244	–	ns
T(susync)	PCM_SYNC setup time high before falling edge of PCM_CLK	–	122	–	ns
T(hsync)	PCM_SYNC hold time after falling edge of PCM_CLK	–	366	–	ns
T(sudin)	PCM_IN setup time before falling edge of PCM_CLK	60	–	–	ns
T(hdin)	PCM_IN hold time after falling edge of PCM_CLK	60	–	–	ns
T(pdout)	Delay from PCM_CLK rising to PCM_OUT valid	–	–	60	ns
T(zdout)	Delay from PCM_CLK falling to PCM_OUT HIGH-Z	–	–	60	ns

3.6.2 PCM Application Guide

The following figure shows the external codec reference design.

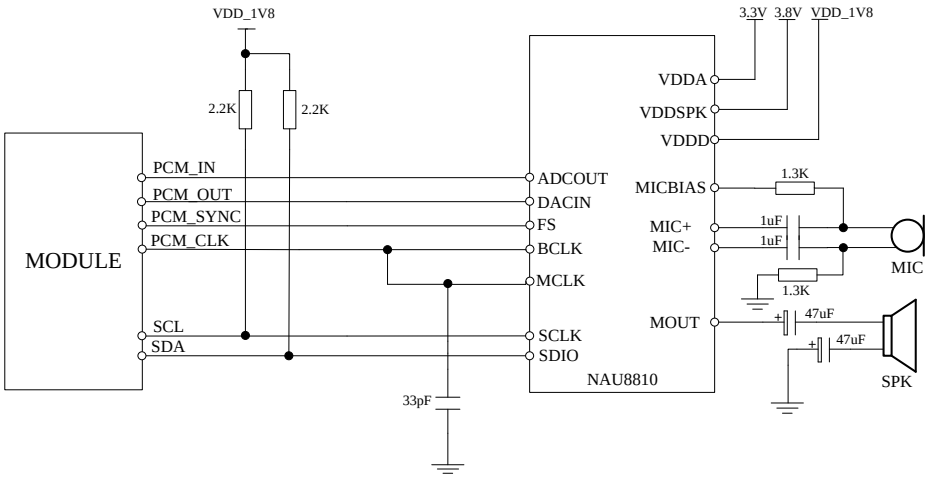

Figure 24: Audio codec reference circuit

3.7 SD Interface

SIM7600E-H provides a 4-bit SD/MMC interface with clock rate up to 200 MHz, The voltage of MMC/SD interface is 2.95V, which is compatible with SDIO Card Specification (version 3.0) and Secure Digital (Physical Layer Specification, version 3.0).It supports up to 32GB SD cards.

Table 16: MMC/SD electronic characteristic (SD_DATA0-SD_DATA3， SD_CLK and SD_CMD) *

Symbol	Parameter	Min.	Typ.	Max.	Unit
VDD_SD	LDO power output voltage**	2.75	2.85	3.05	V
V_{IH}	High-level input voltage	0.65·VDD_EXT	-	VDD_EXT+0.3	V
V_{IL}	Low-level input voltage	-0.3	0	0.25·VDD_EXT	V
V_{OH}	High-level output voltage	VDD_EXT-0.4	2.85	VDD_EXT	V
V_{OL}	Low-level output voltage	0	0	0.45	V

Note:

****Be different from SD_DATA0-SD_DATA3，SD_CLK and SD_CMD，SD_DET is 1.8V operation voltage.***

Customer should provide VDD_SD for SD card and the current should more than 350mA. ESD/EMI components should be arranged beside SD card socket. Refer to the following application circuit.

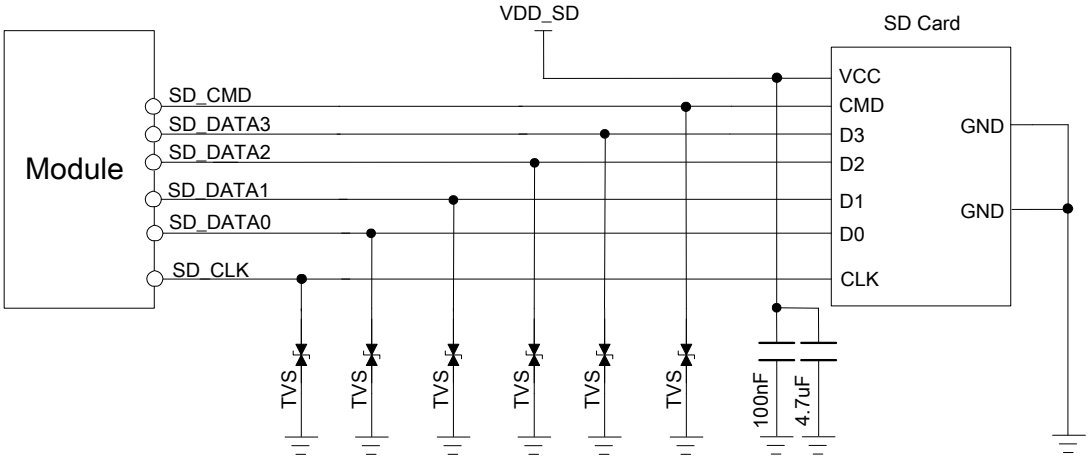

Figure 25: SD reference circuit

SD card layout guide lines:

- Protect other sensitive signals/circuits from SD card signals.
- Protect SD card signals from noisy signals (clocks, SMPS, etc.).
- Up to 200 MHz clock rate, 50 Ω nominal, ±10% trace impedance
- CLK to DATA/CMD length matching < 1 mm
- 15–24 Ω termination resistor on clock lines near module
- Total routing length < 50 mm recommended
- Routing distance from module clock pin to termination resistor < 5 mm
- Spacing to all other signals = 2x line width
- Bus capacitance < 15 pF

3.8 I2C Interface

SIM7600E-H provides a I2C interface compatible with I2C specification, version 5.0, with clock rate up to 400 kbps. Its operation voltage is 1.8V.

The following figure shows the I2C bus reference design.

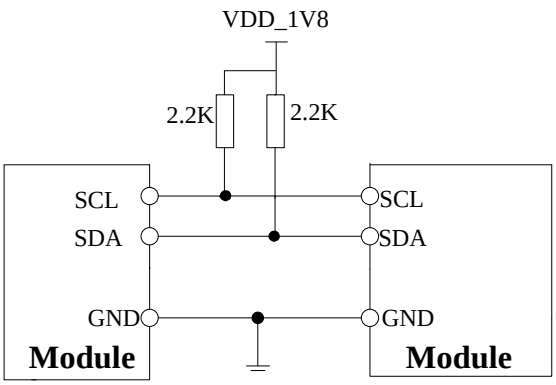

Figure 26: I2C reference circuit

Note：SDA and SCL do not have pull-up resistors in module. So, 2 external pull up resistors are needed in application circuit.

"AT+CRIIC and AT+CWIIC" AT commands could be used to read/write register values of the I2C peripheral devices. For more details about AT commands please refer to document [1].

3.9 SDIO Interface

SIM7600E-H provides a 4 bit 1.8V SDIO interface for WLAN solution.
The default WLAN IC is QCA9377, and the application need software support.
This part do not support now, need for future develop.

3.10 SPI Interface

SIM7600E-H provides a SPI interface as a master only. Its operation voltage is 1.8V, and its clock rate is up to 26 MHz.

Note：For more details of the AT commands about the SPI, please refer to document [1].

3.11 Network status

The NETLIGHT pin is used to control Network Status LED, its reference circuit is shown in the following figure.

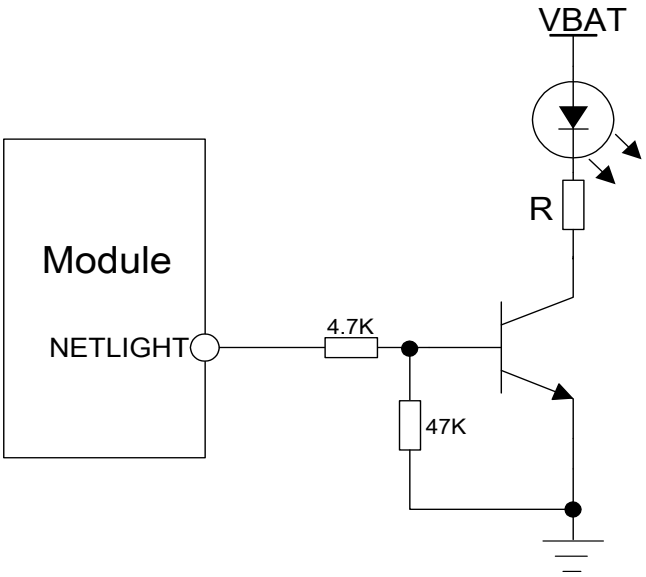

Figure 27: NETLIGHT reference circuit

Note: The value of the resistor named "R" depends on the LED characteristic.

Table 17: NETLIGHT pin status

NETLIGHT pin status	Module status
Always On	Searching Network; Call Connect(include VOLTE,SRLTE)
200ms ON, 200ms OFF	Data Transmit; 4G registered;
800ms ON, 800ms OFF	2G/3G registered network
OFF	Power off ;Sleep

Note: NETLIGHT output low level as "OFF", and high level as "ON".

3.12 Flight Mode Control

The FLIGHTMODE pin can be used to control SIM7600E-H to enter or exit the Flight mode. In Flight mode, the RF circuit is closed to prevent interference with other equipments and minimize current consumption. Bidirectional ESD protection component is suggested to add on FLIGHTMODE pin, its reference circuit is shown in the following figure.

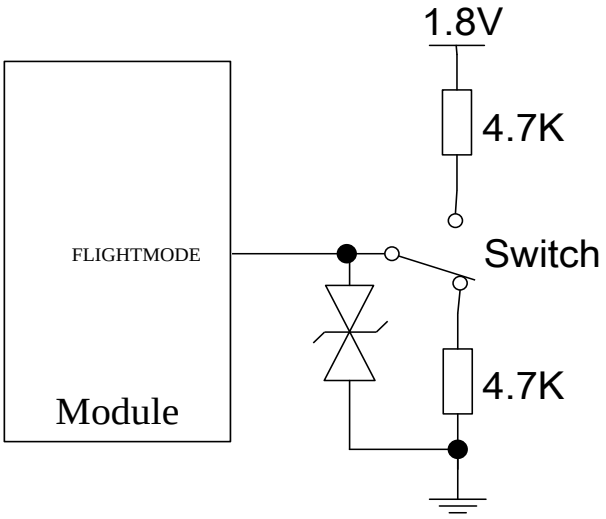

Figure 28: Flight mode switch reference circuit

Table 18: FLIGHTMODE pin status

FLIGHTMODE pin status	Module operation
Input Low Level	Flight Mode: RF is closed
Input High Level	AT+CFUN=0: RF is closed AT+CFUN=1:RF is working

3.13 Other interface

3.13.1 Sink Current Source

The ISINK pin is VBAT tolerant and intended to drive some passive devices, such as LCD backlight and white LED, etc. Its output current can be up to 40mA and be set by the AT command "AT+ CLEDITST".

Table 19: Sink current electronic characteristic

Symbol	Description	Min.	Typ.	Max.	Unit
V_{ISINK}	Voltage tolerant	0.5	-	VBAT	V
I_{ISINK}	Current tolerant	0	-	40	mA

ISINK is a ground-referenced current sink. The following figure shows its reference circuit.

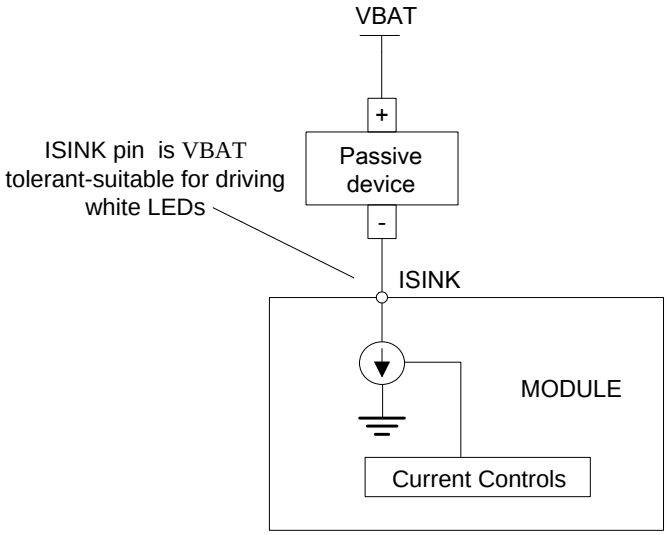

Figure 29: ISINK reference circuit

Note: The sinking current can be adjusted to meet the design requirement through the AT command "AT+ CLEDITST =<0>, <value>".The "value" ranges from 0 to 8, on behalf of the current from 0mA to 40mA by 5mA step.

3.13.2 ADC

SIM7600E-H has 2 dedicated ADC pins named ADC1 and ADC2.They are available for digitizing analog signals such as battery voltage and so on. These electronic specifications are shown in the following table.

Table 20: ADC1 and ADC2 electronic characteristics

Characteristics	Min.	Typ.	Max.	Unit
Resolution	–	15	–	Bits
Conversion time	–	442	–	ms
Input Range	0.1		1.7	V
Input serial resistance	1	–	–	MΩ

Note: "AT+CADC" and "AT+CADC2" can be used to read the voltage of the ADC1 and ADC2 pins, for more details, please refer to document [1].

3.13.3 LDO

SIM7600E-H has a LDO power output, named VDD_EXT. its output voltage is 0V by default, Users can switch the LDO on or off by the AT command "AT+CVAUXS" and configure its output voltage by the AT command "AT+CVAUXV".

Table 21: Electronic characteristic

Symbol	Description	Min.	Typ.	Max.	Unit
V_{VDD_EXT}	Output voltage	1.7	2.95	3.05	V
I_O	Output current	-	-	150	mA

Note：For more details of AT commands about VDD_EXT, please refer to document [1].

4 RF Specifications

4.1 LTE RF Specifications

Table 22: Conducted transmission power

Frequency	Output Power
LTE-FDD B7	21.25dBm

Table 23: E-UTRA operating bands

E-UTRA operating band	Uplink (UL) operating band	Downlink(DL) operating band	Duplex Mode
7	2500~2570MHz	2620~2690MHz	FDD

Table 24: Conducted receive sensitivity

Frequency	Receive sensitivity(Typical)	Receive sensitivity(MAX)
LTE FDD	See table 26.	3GPP

Table 25: Reference sensitivity (QPSK)

E-UTRA band	3GPP standard				Test value	3GPP standard		Duplex
	1.4 MHz	3MHz	5MHz	10MHz	10 MHz	15 MHz	20 MHz	
7			-98	-95	-97	-93.2	-92	FDD

4.2 LTE Antenna Design Guide

Users should connect antennas to SIM7600E-H's antenna pads through micro-strip line or other types of RF trace and the trace impedance must be controlled in 50Ω. SIMCom recommends that the total insertion loss between the antenna pads and antennas should meet the following requirements:

Table 26: Trace loss

Frequency	Loss
2500~2570MHz	<1.2dB
2620~2690MHz	<1.2dB

To facilitate the antenna tuning and certification test, a RF connector and an antenna matching circuit should be added.

In above figure, the components R1, C1, C2 and R2 are used for antenna matching, the values of components can only be achieved after the antenna tuning and usually provided by antenna vendor. By default, the R1, R2 are 0Ω resistors, and the C1, C2 are reserved for tuning. The component D1 is a TVS for ESD protection, and it is optional for users according to application environment. The RF test connector is used for the conducted RF performance test, and should be placed as close as to the module's MAIN_ANT pin. The traces impedance between SIM7600E-H and antenna must be controlled in 50Ω.

Table 27: Recommended TVS

Package	Part Number	Vender
0201	LXES03AAA1-154	Murata
0402	LXES15AAA1-153	Murata

5 Electrical Specifications

5.1 Absolute maximum ratings

Absolute maximum rating for digital and analog pins of SIM7600E-H are listed in the following table:

Table 28: Absolute maximum ratings

Parameter	Min.	Typ.	Max.	Unit
Voltage at VBAT	-0.5	-	6.0	V
Voltage at USB_VBUS	-0.5	-	5.85	V
Voltage at digital pins (RESET,SPI,Keypad,GPIO,I2C,UART,PCM)	-0.3	-	2.1	V
Voltage at digital pins (SD,USIM)	-0.3	-	3.05	V
Voltage at PWRKEY	-0.3	-	1.8	

5.2 Operating conditions

Table 29: Recommended operating ratings

Parameter	Min.	Typ.	Max.	Unit
Voltage at VBAT	3.4	3.8	4.2	V
Voltage at USB_VBUS	3.0	5.0	5.25	V

Table 30: 1.8V Digital I/O characteristics*

Parameter	Description	Min.	Typ.	Max.	Unit
V_{IH}	High-level input voltage	1.17	1.8	2.1	V
V_{IL}	Low-level input voltage	-0.3	0	0.63	V
V_{OH}	High-level output voltage	1.35	-	1.8	V
V_{OL}	Low-level output voltage	0	-	0.45	V
I_{OH}	High-level output current(no pull down resistor)	-	2	-	mA
I_{OL}	Low-level output current(no pull up resistor)	-	-2	-	mA
I_{IH}	Input high leakage current (no pull down resistor)	-	-	1	uA

I_{IL}	Input low leakage current(no pull up resistor)	-1	-	-	uA

Note: These parameters are for digital interface pins, such as SPI, GPIOs (NETLIGHT, FLIGHTMODE, STATUS, USIM_DET, SD_DET), SDIO, I2C, UART, PCM, COEXn, and BOOT_CFG0.

The operating temperature of SIM7600E-H is listed in the following

table. **Table 31: Operating temperature**

Parameter	Min.	Typ.	Max.	Unit
Normal operation temperature	-30	25	80	℃
Extended operation temperature*	-40	25	85	℃
Storage temperature	-45	25	+90	℃

5.3 Operating Mode

5.3.1 Operating Mode Definition

The table below summarizes the various operating modes of SIM7600E-H product.

Table 32: Operating mode Definition

Mode		Function
Normal operation	LTE Sleep	In this case, the current consumption of module will be reduced to the minimal level and the module can still receive paging message and SMS.
	LTE Idle	Software is active. Module is registered to the network, and the module is ready to communicate.
	LTE Talk	Connection between two subscribers is in progress. In this case, the power consumption depends on network settings such as DTX off/on, FR/EFR/HR, hopping sequences, and antenna.
	LTE Standby	Module is ready for data transmission, but no data is currently sent or received. In this case, power consumption depends on network settings.
	LTE Data transmission	There is data transmission in progress. In this case, power consumption is related to network settings (e.g. power control level); uplink/downlink data rates, etc.
Minimum functionality mode		AT command “AT+CFUN=0” AT+CSCLK=1 can be used to set the module to a minimum functionality mode without removing the

	power supply. In this mode, the RF part of the module will not work and the USIM card will not be accessible, but the serial port and USB port are still accessible. The power consumption in this mode is lower than normal mode.
Flight mode	AT command “AT+CFUN=4” or pulling down the FLIGHTMODE pin can be used to set the module to flight mode without removing the power supply. In this mode, the RF part of the module will not work, but the serial port and USB port are still accessible. The power consumption in this mode is lower than normal mode.
Power off	Module will go into power off mode by sending the AT command “AT+CPOF” or pull down the PWRKEY pin, normally. In this mode the power management unit shuts down the power supply, and software is not active. The serial port and USB are is not accessible.

5.3.2 Sleep mode

In sleep mode, the current consumption of module will be reduced to the minimal level, and module can still receive paging message and SMS.
Several hardware and software conditions must be satisfied together in order to let SIM7600E-H enter into sleep mode:
1. UART condition
2. USB condition
3. Software condition
Note: Before designing, pay attention to how to realize sleeping/waking function and refer to Document [26] for more details.

5.3.3 Minimum functionality mode and Flight mode

Minimum functionality mode ceases a majority function of module, thus minimizing the power consumption. This mode is set by the AT command which provides a choice of the functionality levels.

- AT+CFUN=0: Minimum functionality
- AT+CFUN=1: Full functionality (Default)
- AT+CFUN=4: Flight mode

If SIM7600E-H has been set to minimum functionality mode, the RF function and USIM card function will be closed. In this case, the serial port and USB are still accessible, but RF function and USIM card will be unavailable.
If SIM7600E-H has been set to flight mode, the RF function will be closed. In this case, the serial port and USB are still accessible, but RF function will be unavailable.
When SIM7600E-H is in minimum functionality or flight mode, it can return to full functionality by the AT command “AT+CFUN=1”.

5.4 Current Consumption

The current consumption is listed in the table below.

Table 33: Current consumption on VBAT Pins

LTE sleep/idle mode	
LTE supply current (GNSS off，without USB connection)	Sleep mode Typical: 4.6mA Idle mode Typical: 17.5mA
LTE data	
LTE-FDD B7	@5Mbps 22.2dBm Typical: 650mA @10Mbps 22.1dBm Typical: 650mA @20Mbps 22.1dBm Typical: 630mA

5.5 ESD Notes

SIM7600E-H is sensitive to ESD in the process of storage, transporting, and assembling. When SIM7600E-H is mounted on the users' mother board, the ESD components should be placed beside the connectors which human body mayt touch, such as USIM card holder, audio jacks, switches, keys, etc. The following table shows the SIM7600E-H ESD measurement performance without any external ESD component.

Table 34: The performance measurement table (Temperature: 25℃, Humidity: 45%)

Part	Contact discharge	Air discharge
VBAT,GND	+/-6K	+/-12K
Antenna port	+/-5K	+/-10K
USB	+/-4K	+/-8K
UART	+/-3K	+/-6K
Other PADs	+/-3K	+/-6K

6 SMT Production Guide

6.1 Top and Bottom View of SIM7600E-H

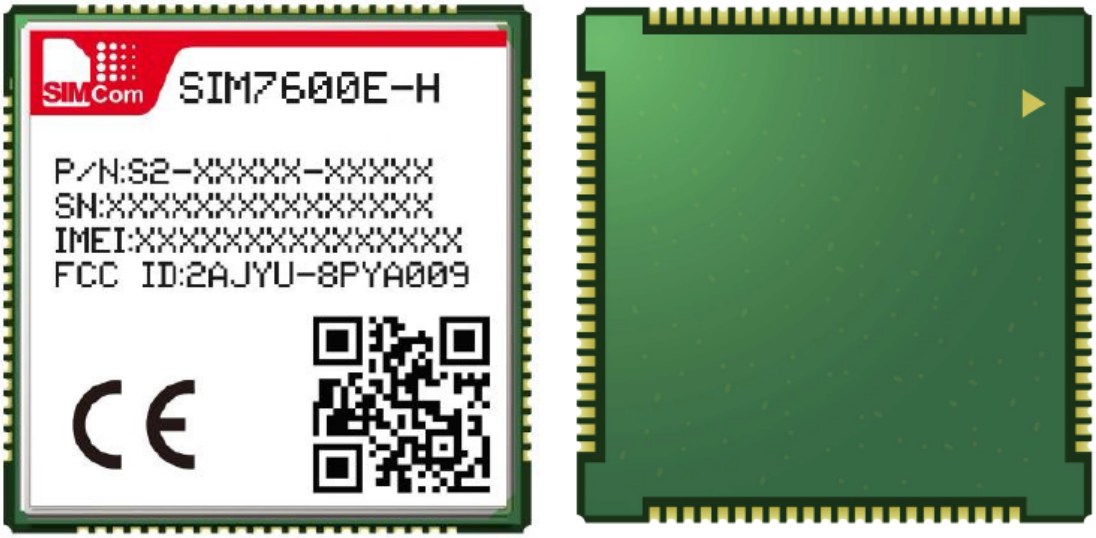

Figure 34: Top and bottom view of SIM7600E-H

6.2 Label Information

Figure 35: Label information

Table 35: The description of label information

No.	Description
A	LOGO
B	Module part number
C	Project name
D	Serial number
E	International mobile equipment identity
F	QR code

6.3 Typical SMT Reflow Profile

SIMCom provides a typical soldering profile. Therefore the soldering profile shown below is only a generic recommendation and should be adjusted to the specific application and manufacturing constraints.

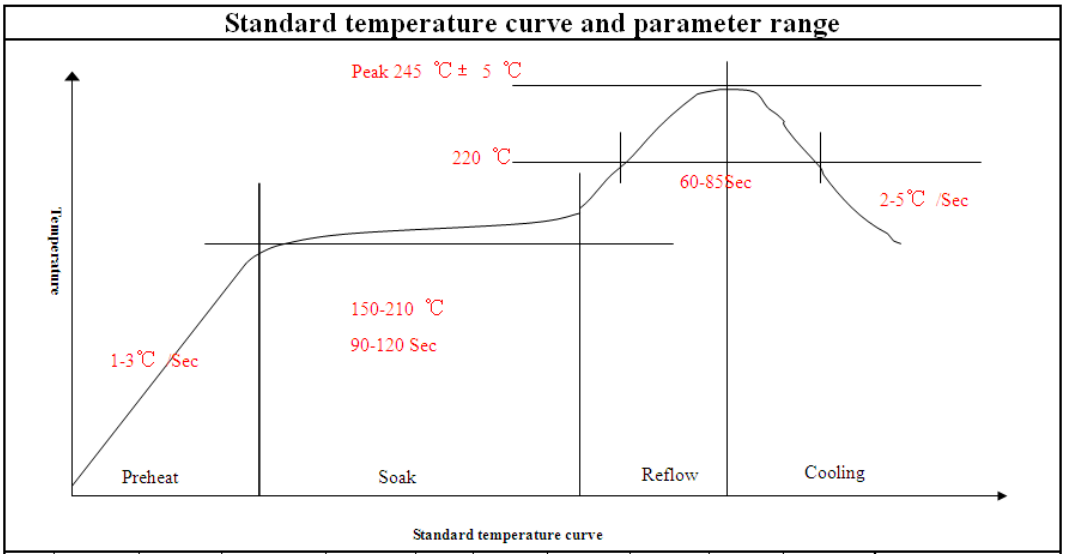

Figure 36: The ramp-soak-spike reflow profile of SIM7600E-H

Note: For more details about secondary SMT, please refer to the document [21].

6.4 Moisture Sensitivity Level (MSL)

SIM7600E-H is qualified to Moisture Sensitivity Level (MSL) 3 in accordance with JEDEC J-STD-033. If the prescribed time limit is exceeded, users should bake modules for 192 hours in drying equipment (<5% RH) at 40+5/-0°C, or 72 hours at 85+5/-5°C. Note that plastic tray is not heat-resistant, and only can be baked at 45° C.

Table 36: Moisture Sensitivity Level and Floor Life

Moisture Sensitivity Level (MSL)	Floor Life (out of bag) at factory ambient≤30°C/60% RH or as stated
1	Unlimited at ≦30℃/85% RH
2	1 year
2a	4 weeks
3	168 hours
4	72 hours
5	48 hours
5a	24 hours
6	Mandatory bake before use. After bake, it must be reflowed within the

	time limit specified on the label.

NOTE: IPC / JEDEC J-STD-033 standard must be followed for production and storage.

6.5 Stencil Foil Design Recommendation

The recommended thickness of stencil foil is more than 0.15mm.

7 Packaging

SIM7600E-H module support tray packaging.

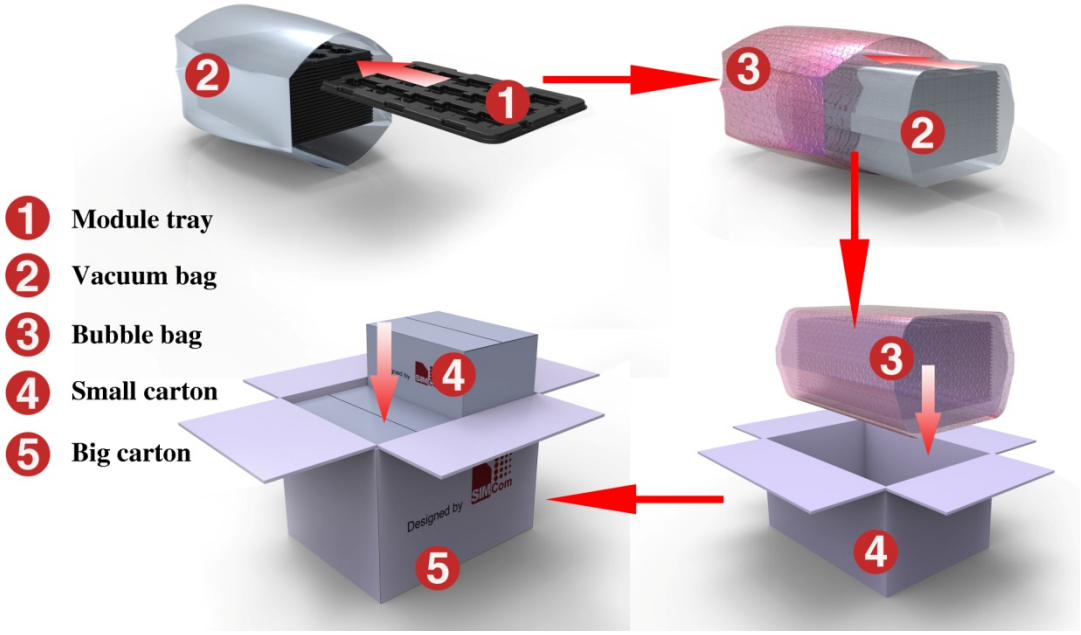

Figure 37: packaging diagram

Module tray drawing:

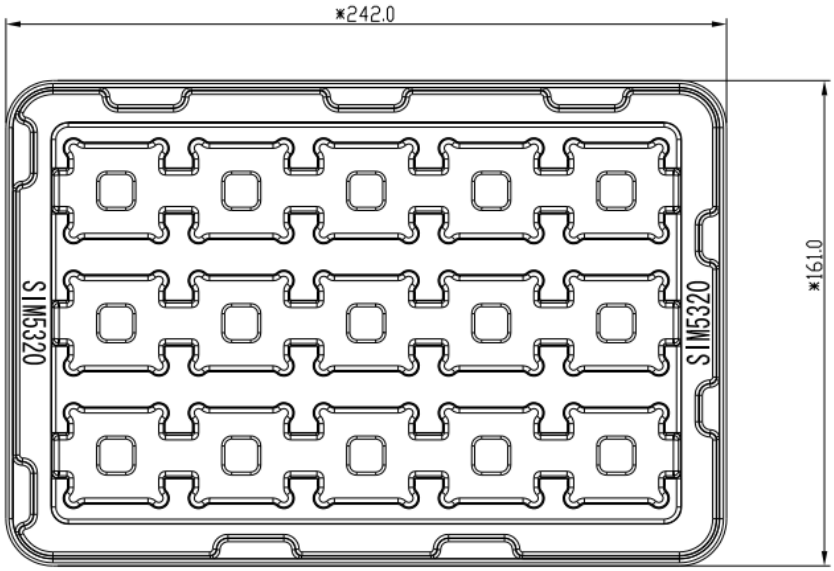

Figure 38: Tray drawing

Table 37: Tray size

Length（±3mm）	Width（±3mm）	Number
242.0	161.0	15

Small carton drawing：

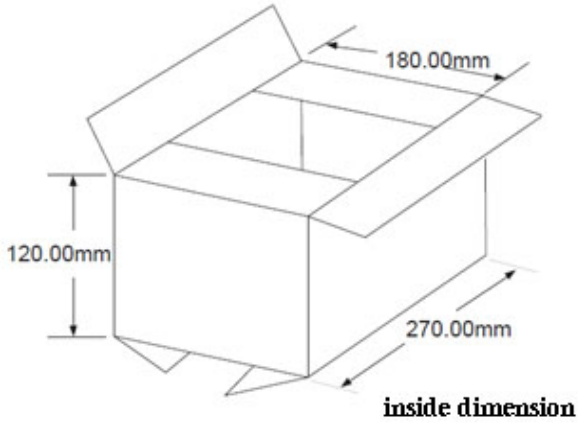

Figure 39: Small carton drawing

Table 38: Small Carton size

Length（±10mm）	Width（±10mm）	Height（±10mm）	Number
270	180	120	15*20=300

Big carton drawing：

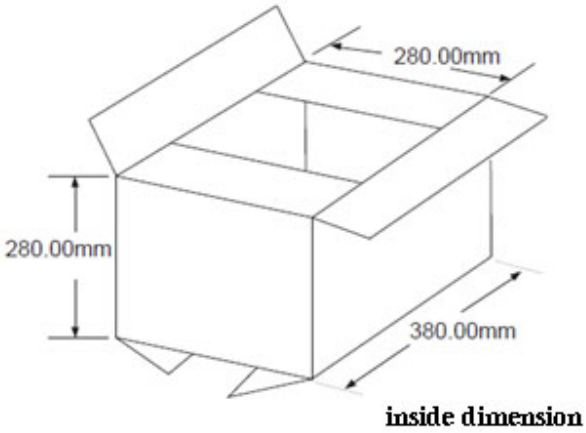

Figure 40: Big carton drawing

Table 39: Big Carton size

Length（±10mm）	Width（±10mm）	Height（±10mm）	Number
380	280	280	300*4=1200

Appendix

A. Coding Schemes and Maximum Net Data Rates over Air Interface

Table 40: Coding Schemes and Maximum Net Data Rates over Air Interface

LTE-FDD device category (Downlink)	Max data rate（peak）	Modulation type
Category 1	10Mbps	QPSK/16QAM/64QAM
Category 2	50Mbps	QPSK/16QAM/64QAM
Category 3	100Mbps	QPSK/16QAM/64QAM
Category 4	150Mbps	QPSK/16QAM/64QAM
LTE-FDD device category (Uplink)	**Max data rate（peak）**	**Modulation type**
Category 1	5Mbps	QPSK/16QAM
Category 2	25Mbps	QPSK/16QAM
Category 3	50Mbps	QPSK/16QAM
Category 4	50Mbps	QPSK/16QAM

B. Related Documents

Table 41: Related

Documents NO.	Title	Description
[1]	SIM7500_SIM7600 Series_AT Command Manual_V1.xx	AT Command Manual
[2]	ITU-T Draft new recommendationV.25ter	Serial asynchronous automatic dialing and control
[3]	GSM 07.07	Digital cellular telecommunications (Phase 2+); AT command set for GSM Mobile Equipment (ME)
[4]	GSM 07.10	Support GSM 07.10 multiplexing protocol
[5]	GSM 07.05	Digital cellular telecommunications (Phase 2+); Use of Data Terminal Equipment – Data Circuit terminating Equipment (DTE – DCE) interface for Short Message Service (SMS) and Cell Broadcast Service (CBS)
[6]	GSM 11.14	Digital cellular telecommunications system (Phase 2+); Specification of the SIM Application Toolkit for the Subscriber Identity Module – Mobile Equipment (SIM – ME) interface
[7]	GSM 11.11	Digital cellular telecommunications system (Phase 2+); Specification of the Subscriber Identity Module – Mobile Equipment (SIM – ME) interface
[8]	GSM 03.38	Digital cellular telecommunications system (Phase 2+); Alphabets and language-specific information
[9]	GSM 11.10	Digital cellular telecommunications system (Phase 2)；Mobile Station (MS) conformance specification； Part 1: Conformance specification
[10]	EN 301 908-02 V2.2.1	(ERM); Base Stations (BS) and User Equipment (UE) for IMT-2000. Third Generation cellular networks; Part 2: Harmonized EN for IMT-2000, CDMA Direct Spread (UTRA FDD) (UE) covering essential requirements of article
[11]	EN 301 489-24 V1.2.1	Electromagnetic compatibility and Radio Spectrum Matters (ERM); Electromagnetic Compatibility (EMC) standard for radio equipment and services; Part 24: Specific conditions for IMT-2000 CDMA Direct Spread (UTRA) for Mobile and portable (UE) radio and ancillary equipment

[12]	IEC/EN60950-1(2001)	Safety of information technology equipment (2000)
[13]	GCF-CC V3.23.1	Global Certification Forum - Certification Criteria
[14]	2002/95/EC	Directive of the European Parliament and of the Council of 27 January 2003 on the restriction of the use of certain hazardous substances in electrical and electronic equipment (RoHS)
[15]	Module secondary-SMT-UGD-V1.xx	
[16]	SIM7X00 Series_UART_Application Note_V1.xx	This document describes how to use UART interface of SIMCom modules.
[17]	SIM7100_SIM7500_SIM7600 AUDIO_Application Note_V1.xx	USB AUDIO Application Note
[18]	Antenna design guidelines for diversity receiver system	Antenna design guidelines for diversity receiver system
[19]	SIM7100_SIM7500_SIM7600 _Sleep Mode_Application Note_V1.xx	

C. Terms and Abbreviations

Table 42: Terms and Abbreviations

Abbreviation	Description
ADC	Analog-to-Digital Converter
ARP	Antenna Reference Point
BER	Bit Error Rate
BTS	Base Transceiver Station
CS	Coding Scheme
CSD	Circuit Switched Data
CTS	Clear to Send
DAC	Digital-to-Analog Converter
DRX	Discontinuous Reception
DSP	Digital Signal Processor
DTE	Data Terminal Equipment (typically computer, terminal, printer)
DTR	Data Terminal Ready
DTX	Discontinuous Transmission
EFR	Enhanced Full Rate
EGSM	Enhanced GSM
EMC	Electromagnetic Compatibility
ESD	Electrostatic Discharge
ETS	European Telecommunication Standard
EVDO	Evolution Data Only
FCC	Federal Communications Commission (U.S.)
FD	SIM fix dialing phonebook
FDMA	Frequency Division Multiple Access
FR	Full Rate
GMSK	Gaussian Minimum Shift Keying
GNSS	Global Navigation Satellite System
GPS	Global Positioning System
GSM	Global Standard for Mobile Communications
HR	Half Rate
HSPA	High Speed Packet Access
I2C	Inter-Integrated Circuit
IMEI	International Mobile Equipment Identity
LTE	Long Term Evolution
MO	Mobile Originated
MS	Mobile Station (GSM engine), also referred to as TE
MT	Mobile Terminated
NMEA	National Marine Electronics Association
PAP	Password Authentication Protocol
PBCCH	Packet Switched Broadcast Control Channel
PCB	Printed Circuit Board
PCS	Personal Communication System, also referred to as GSM 1900

RF	Radio Frequency
RMS	Root Mean Square (value)
RTC	Real Time Clock
SIM	Subscriber Identification Module
SMS	Short Message Service
SPI	serial peripheral interface
SMPS	Switched-mode power supply
TDMA	Time Division Multiple Access
TE	Terminal Equipment, also referred to as DTE
TX	Transmit Direction
UART	Universal Asynchronous Receiver & Transmitter
VSWR	Voltage Standing Wave Ratio
SM	SIM phonebook
NC	Not connect
HSDPA	High Speed Downlink Packet Access
HSUPA	High Speed Uplink Packet Access
ZIF	Zero intermediate frequency
WCDMA	Wideband Code Division Multiple Access
VCTCXO	Voltage control temperature-compensated crystal oscillator
USIM	Universal subscriber identity module
UMTS	Universal mobile telecommunications system
UART	Universal asynchronous receiver transmitter

D. Safety Caution

Table 43: Safety Caution

Marks	Requirements
	When in a hospital or other health care facility, observe the restrictions about the use of mobiles. Switch the cellular terminal or mobile off, medical equipment may be sensitive and not operate normally due to RF energy interference.
	Switch off the cellular terminal or mobile before boarding an aircraft. Make sure it is switched off. The operation of wireless appliances in an aircraft is forbidden to prevent interference with communication systems. Forgetting to think much of these instructions may impact the flight safety, or offend local legal action, or both.
	Do not operate the cellular terminal or mobile in the presence of flammable gases or fumes. Switch off the cellular terminal when you are near petrol stations, fuel depots, chemical plants or where blasting operations are in progress. Operation of any electrical equipment in potentially explosive atmospheres can constitute a safety hazard.
	Your cellular terminal or mobile receives and transmits radio frequency energy while switched on. RF interference can occur if it is used close to TV sets, radios, computers or other electric equipment.
	Road safety comes first! Do not use a hand-held cellular terminal or mobile when driving a vehicle, unless it is securely mounted in a holder for hands free operation. Before making a call with a hand-held terminal or mobile, park the vehicle.
	GSM cellular terminals or mobiles operate over radio frequency signals and cellular networks and cannot be guaranteed to connect in all conditions, especially with a mobile fee or an invalid SIM card. While you are in this condition and need emergent help, please remember to use emergency calls. In order to make or receive calls, the cellular terminal or mobile must be switched on and in a service area with adequate cellular signal strength. Some networks do not allow for emergency call if certain network services or phone features are in use (e.g. lock functions, fixed dialing etc.). You may have to deactivate those features before you can make an emergency call. Also, some networks require that a valid SIM card be properly inserted in the cellular terminal or mobile.

Contact us:

Shanghai SIMCom Wireless Solutions Ltd.

Add: SIM Technology Building, No.633, Jinzhong Road, Changning District, Shanghai P.R. China 200335

Tel：+86 21 3235 3300

Fax：+86 21 3235 3020

URL：www.simcomm2m.com

OEM Guidance

1. Applicable FCC rules

   This module is granted by Single Modular Approval. It complies to the requirements of FCC part 27.

2. The specific operational use conditions

   The input voltage to the module is nominally 3.4-4.2V DC. The operational ambient temperature of the module is
   –40 °C ~ 85 °C. Only the embedded Omni Antenna is allowed. Any other external antenna is prohibited.

3. Limited module procedures

   N/A

4. Trace antenna design

   N/A

5. RF exposure considerations

   The equipment complies with FCC radiation exposure limits set forth for an uncontrolled environment. This equipment should be installed and operated with minimum distance 20cm between the radiator and your body. If the equipment built into a host as a portable usage, the additional RF exposure evaluation may be required as specified by 2.1093.

6. Antenna

Antenna type: External fixed omni antenna	2500-2570 MHz(TX) 2620-2690 MHz(RX) Peak Gain 11.50dBi

7. Label and compliance information

An exterior label on OEM's end product can use wording such as the following:
"Contains Transmitter Module FCC ID: 2AJYU-8PYA009 " or "
Contains FCC ID: 2AJYU-8PYA009 "

8. Information on test modes and additional testing requirements

a)The modular transmitter has been fully tested by the module grantee on the required number of channels,modulation types, and modes, it should not be necessary for the host installer to re-test all the available transmitter modes or settings. It is recommended that the host product manufacturer, installing the modular transmitter,perform some investigative measurements to confirm that the resulting composite system does not exceed the spurious emissions limits or band edge limits (e.g., where a different antenna may be causing additional emissions).

b)The testing should check for emissions that may occur due to the intermixing of emissions with the other transmitters, digital circuitry, or due to physical properties of the host product (enclosure). This investigation is especially important when integrating multiple modular transmitters where the certification is based on testing each of them in a stand-alone configuration. It is important to note that host product manufacturers should not assume that because the modular transmitter is certified that they do not have any responsibility for final product compliance.

c)If the investigation indicates a compliance concern the host product manufacturer is obligated to mitigate the issue. Host products using a modular transmitter are subject to all the applicable individual technical rules as well as to the general conditions of operation in Sections 15.5, 15.15, and 15.29 to not cause interference. The operator of the host product will be obligated to stop operating the device until the interference have been corrected .

9. Additional testing, Part 15 Sub part B disclaimer The final host / module combination need to be evaluated against the FCC Part 15B criteria for unintentional radiators in order to be properly authorized for operation as a Part 15 digital device.

The host integrator installing this module into their product must ensure that the final composite product complies with the FCC requirements by a technical assessment or evaluation to the FCC rules, including the transmitter operation and should refer to guidance in KDB 996369. For host products with certified modular transmitter, the frequency range of investigation of the composite system is specified by rule in Sections 15.33(a)(1) through
(a)(3), or the range applicable to the digital device, as shown in Section 15.33(b)(1), whichever is the higher frequency range of investigation When testing the host product, all the transmitters must be operating.The transmitters can be enabled by using publicly-available drivers and turned on, so the transmitters are active. In certain conditions it might be appropriate to use a technology-specific call box (test set) where accessory 50 devices or drivers are not available. When testing for emissions from the unintentional radiator, the transmitter shall be placed in the receive mode or idle mode, if possible. If receive mode only is not possible then, the radio shall be passive (preferred) and/or active scanning. In these cases, this would need to enable activity on the communication BUS (i.e., PCIe, SDIO, USB) to ensure the unintentional radiator circuitry is enabled. Testing laboratories may need to add attenuation or filters depending on the signal strength of any active beacons (if applicable) from the enabled radio(s). See ANSI C63.4, ANSI C63.10 and ANSI C63.26 for further general testing details.
The product under test is set into a link/association with a partnering device, as per the normal intended use of the product. To ease testing, the product under test is set to transmit at a high duty cycle, such as by sending a file or streaming some media content.

FCC Statement:
Any Changes or modifications not expressly approved by the party responsible for compliance could void the user's authority to operate the equipment.
This device complies with part 15 of the FCC Rules. Operation is subject to the following two conditions: (1) This device may not cause harmful interference, and
(2) This device must accept any interference received, including interference that may cause undesired operation