SIM7080G _Hardware Design_V1.03

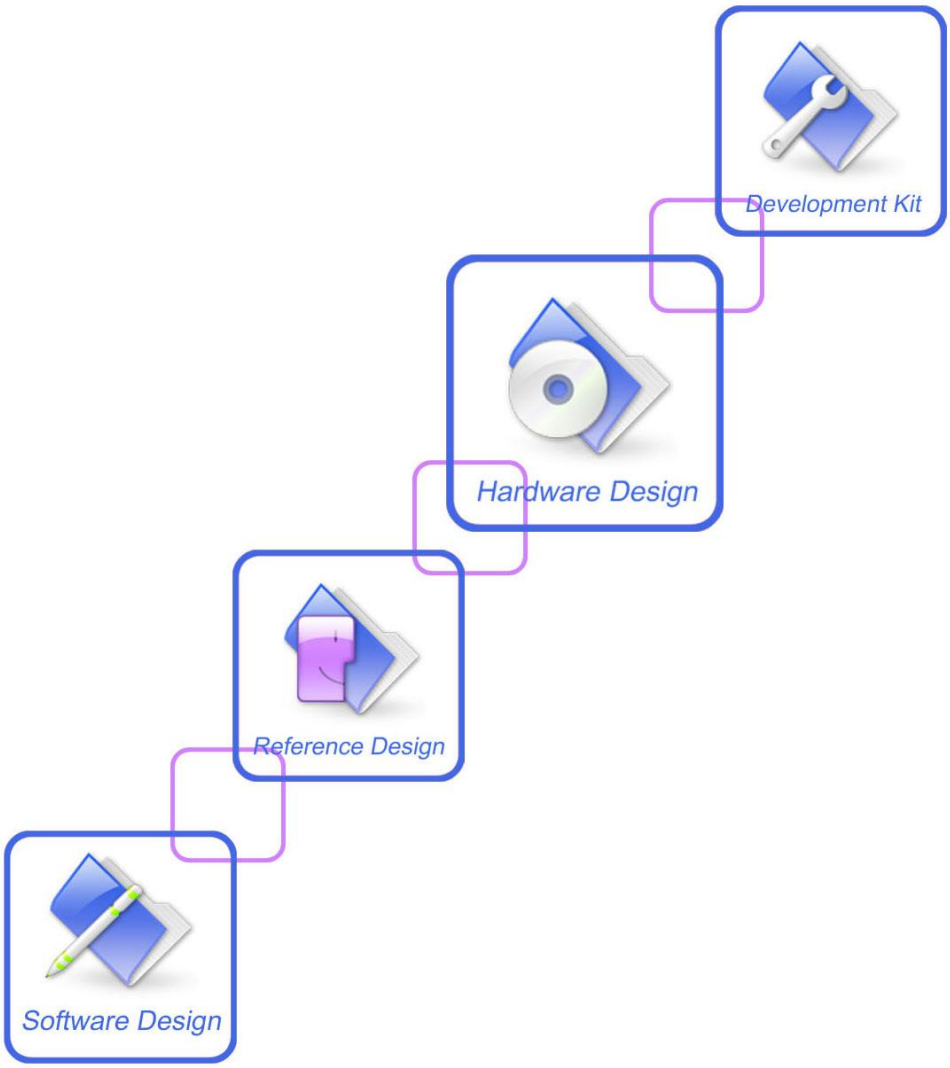

Document Title	SIM7080G_Hardware Design
Version	1.03
Date	2019-12-13
Status	Released
Document Control ID	SIM7080G_Hardware Design_V1.03

General Notes

SIMCom offers this information as a service to its customers to support the application and engineering efforts that use the products designed by SIMCom. The information provided is based on the requirements specifically from the customers. SIMCom has not undertaken any independent search for additional relevant information, including any information that may be in the customer's possession. Furthermore, the system validation of the product designed by SIMCom within a larger electronic system remains the responsibility of the customer or the customer's system integrator. All specifications supplied herein are subject to change without notice.

Copyright

This document contains the proprietary technical information which is the property of SIMCom Limited, copying of this document, giving it to others, the using or communication of the contents thereof are forbidden without the official authority by SIMCom. Offenders are liable to the payment of the damages. All rights are reserved in the event of grant of a patent or the registration of a utility model or design. All specifications supplied herein are subject to change without notice

Copyright © SIMCom Wireless Solutions Co., Ltd. 2019

Contents

Contents **2**

Table Index **4**

Figure Index **6**

Revision History **7**

1 Introduction **8**
1.1 Product Outline 9
1.2 Hardware Interface Overview 10
1.3 Hardware Block Diagram 11
1.4 Functional Overview 12

2 Package Information **13**
2.1 Pin Assignment Overview 13
2.2 Pin Description 15
2.3 Mechanical Information 19
2.4 Footprint Recommendation 20

3 Interface Application **21**
3.1 Power Supply 21
3.1.1 Power Supply Design Guide 21
3.1.2 Recommended Power Supply Circuit 22
3.1.3 Voltage Monitor 22
3.2 Power on/Power off Function 24
3.2.1 Power on 24
3.2.2 Power off 25
3.3 UART Interface 27
3.3.1 UART Design Guide 27
3.3.2 RI and DTR Behavior 29
3.4 USB Interface 30
3.5 SIM Interface 31
3.5.1 SIM Application Guide 31
3.6 PCM Interface 32
3.6.1 PCM timing 32
3.6.2 PCM Application Guide 34
3.7 I2C Interface 34
3.8 SPI Interface 35
3.9 Network status 35
3.10 ADC interface 37
3.11 LDO output 37
3.12 RFGRFC Interface 38

4 RF Specifications **39**
4.1 LTE RF Specifications 39
Table 17: Conducted transmission power 39

4.2 LTE Antenna Design Guide 44
4.3 GNSS 45
4.3.1 GNSS Technical specification 45
4.3.2 GNSS Application Guide 45
4.4 RF traces note 47
4.4.1 RF traces layout 47
4.4.2 LTE ANT and other system ANT decoupling 48

5 Electrical Specifications 49
5.1 Absolute maximum ratings 49
5.2 Operating conditions 50
5.3 Operating Mode 51
5.3.1 Operating Mode Definition 51
5.3.2 Sleep mode 52
5.3.3 Minimum functionality mode and Flight mode 52
5.3.4 Power Saving Mode (PSM) 53
5.3.5 Extended Mode DRX (e-DRX) 53
5.4 Current Consumption 54
5.5 ESD Notes 57

6 SMT Production Guide 58
6.1 Top and Bottom View of SIM7080G 58
6.2 Label Information 59
6.3 Typical SMT Reflow Profile 60
6.4 Moisture Sensitivity Level (MSL) 61
6.5 Baking 62
6.6 Stencil Foil Design Recommendation 63

7 Packaging 64
7.1 Tray packaging 64

Appendix 67
A. Reference Design 67
B. Design check list 68
C. Coding Schemes and Maximum Net Data Rates over Air Interface 70
D. Related Documents 71
E. Terms and Abbreviations 72
F. Safety Caution 74

Table Index

Table 1: SIM7080G frequency bands and air interface 9
Table 2: General features 12
Table 3: Pin definition 14
Table 4: IO parameters definition 15
Table 5: Pin description 15
Table 6: VBAT pins electronic characteristic 21
Table 7: Recommended TVS diode list 22
Table 8: Power on timing and electronic characteristic 25
Table 9: Power off timing and electronic characteristic 26
Table 10: UART electronic characteristic 28
Table 11: SIM electronic characteristic in 1.8V mode (SIM_VDD=1.8V) 31
Table 12: PCM format 32
Table 13: PCM timing parameters 33
Table 14: NETLIGHT pin status 36
Table 15: ADC electronic characteristics 37
Table 16: Electronic characteristic 37
Table 17: Conducted transmission power 39
Table 18: Maximum Power Reduction (MPR) for UE category NB2&M1 Power Class 5 40
Table 19: Operating frequencies 40
Table 20: E-UTRA operating bands 40
Table 21: Conducted receive sensitivity 41
Table 22: CAT-M1 Reference sensitivity (QPSK) 42
Table 23: CAT-NB2 Reference sensitivity (QPSK) 43
Table 24: Trace loss 44
Table 25: Recommended TVS 44
Table 26: Absolute maximum ratings 49
Table 27: Recommended operating ratings 50
Table 28: 1.8V Digital I/O characteristics* 50
Table 29: Operating temperature 50
Table 30: Operating mode Definition 51
Table 31: Current consumption on VBAT Pins (VBAT=3.8V) 54
Table 32: The ESD performance measurement table (Temperature: 25℃, Humidity: 45%.) 57
Table 33: The description of label information 59
Table 34: Moisture Sensitivity Level and Floor Life 61
Table 35: Baking conditions 62
Table 36: Tray size 65
Table 37: Small Carton size 65
Table 38: Big Carton size 66
Table 39: Schematic Check List 68
Table 40: PCB Layout Check List 68
Table 41: Coding Schemes and Maximum Net Data Rates over Air Interface 70
Table 42: Related Documents 71
Table 43: Terms and Abbreviations 72

Table 44: Safety Caution.....74

Figure Index

Figure 1: SIM7080G block diagram 11
Figure 2: Pin assignment overview 13
Figure 3: Dimensions (Unit: mm) 19
Figure 4: Footprint recommendation (Unit: mm) 20
Figure 5: Power supply application circuit 21
Figure 6: power supply reference circuit 22
Figure 7: Reference power on/off circuit 24
Figure 8: Power on timing sequence 24
Figure 9: Power off timing sequence 26
Figure 10: UART full modem 27
Figure 11: UART null modem 28
Figure 12: Reference circuit of level shift 28
Figure 13: RI behaviour（SMS and URC report） 29
Figure 14: USB reference circuit 30
Figure 15: SIM interface reference circuit 31
Figure 16: PCM_SYNC timing 32
Figure 17: External codec to module timing 32
Figure 18: Module to external codec timing 33
Figure 19: Audio codec reference circuit 34
Figure 20: I2C reference circuit 34
Figure 21: SPI master mode circuit 35
Figure 22: SPI slave mode circuit 35
Figure 23: NETLIGHT reference circuit 36
Figure 24：Power on sequence of the VDD_EXT 37
Figure 25：RFGRFC interface reference circuit 38
Figure 26: Antenna matching circuit (MAIN_ANT) 44
Figure 27: Active antenna circuit 45
Figure 28: Passive antenna circuit (Default) 46
Figure 29: RF trace should be far away from other high speed signal lines 47
Figure 30: The distance between GND to the inner conductor of SMA 48
Figure 31: e-DRX diagrammatic sketch 53
Figure 32: Top and bottom view of SIM7080G 58
Figure 33: Label information 59
Figure 34: The ramp-soak-spike reflow profile of SIM7080G 60
Figure 35: stencilrecommendation (Unit: mm) 63
Figure 36: packaging diagram 64
Figure 37: Tray drawing 64
Figure 38: Small carton drawing 65
Figure 39: Big carton drawing 65
Figure 40: Reference design 67

Revision History

Data	Version	Description of change	Author
2019-05-31	1.00	Original	Hongjun Tu Lijuan Yin
2019-08-28	1.01	1. Update GNSS Passive antenna circuit and Galileo Frequency. 2. Update GRFC dedicated signals lines to control the antenna tuner.	Hongjun Tu Xianjing Zhao
2019-10-11	1.02	1. Update Figure 1. 2. Update power consumption data.	Hongjun Tu Xianjing Zhao
2019-12-25	1.03	1. Update power consumption data. 2. Update GNSS test data and CAT-M B66&85's sensitivity	Hongjun Tu Xianjing Zhao

1 Introduction

This document describes the electronic specifications, RF specifications, interfaces, mechanical characteristics and testing results of the SIMCom SIM7080Gmodule. With the help of this document and other SIM7080G software application notes/user guides, users can understand and use SIM7080Gmodule to design and develop applications quickly.

1.1 Product Outline

The SIM7080G modules support LTE CAT-M1,LTE CAT-NB1/NB2.
The physical dimension of SIM7080G is17.6mm×15.7mm×2.4 mm. And the physical dimension is compatible with the packaging of SIM868 and SIM7020G.

Table 1: SIM7080G frequency bands and air interface

Network Type	Band	SIM7080G	
	Category	M1	NB1/NB2
LTE-FDD* HD-FDD	LTE-FDD B1	✓	✓
	LTE-FDD B2	✓	✓
	LTE-FDD B3	✓	✓
	LTE-FDD B4	✓	✓
	LTE-FDD B5	✓	✓
	LTE-FDD B8	✓	✓
	LTE-FDD B12	✓	✓
	LTE-FDD B13	✓	✓
	LTE-FDD B14	✓	
	LTE-FDD B18	✓	✓
	LTE-FDD B19	✓	✓
	LTE-FDD B20	✓	✓
	LTE-FDD B25	✓	✓
	LTE-FDD B26	✓	✓
	LTE-FDD B27	✓	
	LTE-FDD B28	✓	✓
	LTE-FDD B66	✓	✓
	LTE-FDD B71		✓
GNSS	GPS	✓	
	GLONASS	✓	
	BeiDou	✓	
	Galileo	✓	

Note:Galileo is default closed in software. But users can open it via AT command "AT+CGNSMOD". For more information about these AT commands, please refer to Document [1]

1.2 Hardware Interface Overview

The interfaces are described in detail in the next chapters include:

- Power Supply
- USBInterface
- UART Interface
- SIM Interface
- ADC
- LDO Power Output
- PCM Interface
- I2C Interface
- SPI Interface
- RFGRFC Interface
- GPIOs
- AntennaInterface

1.3 Hardware Block Diagram

The block diagram of the SIM7080G module is shown in the figure below.

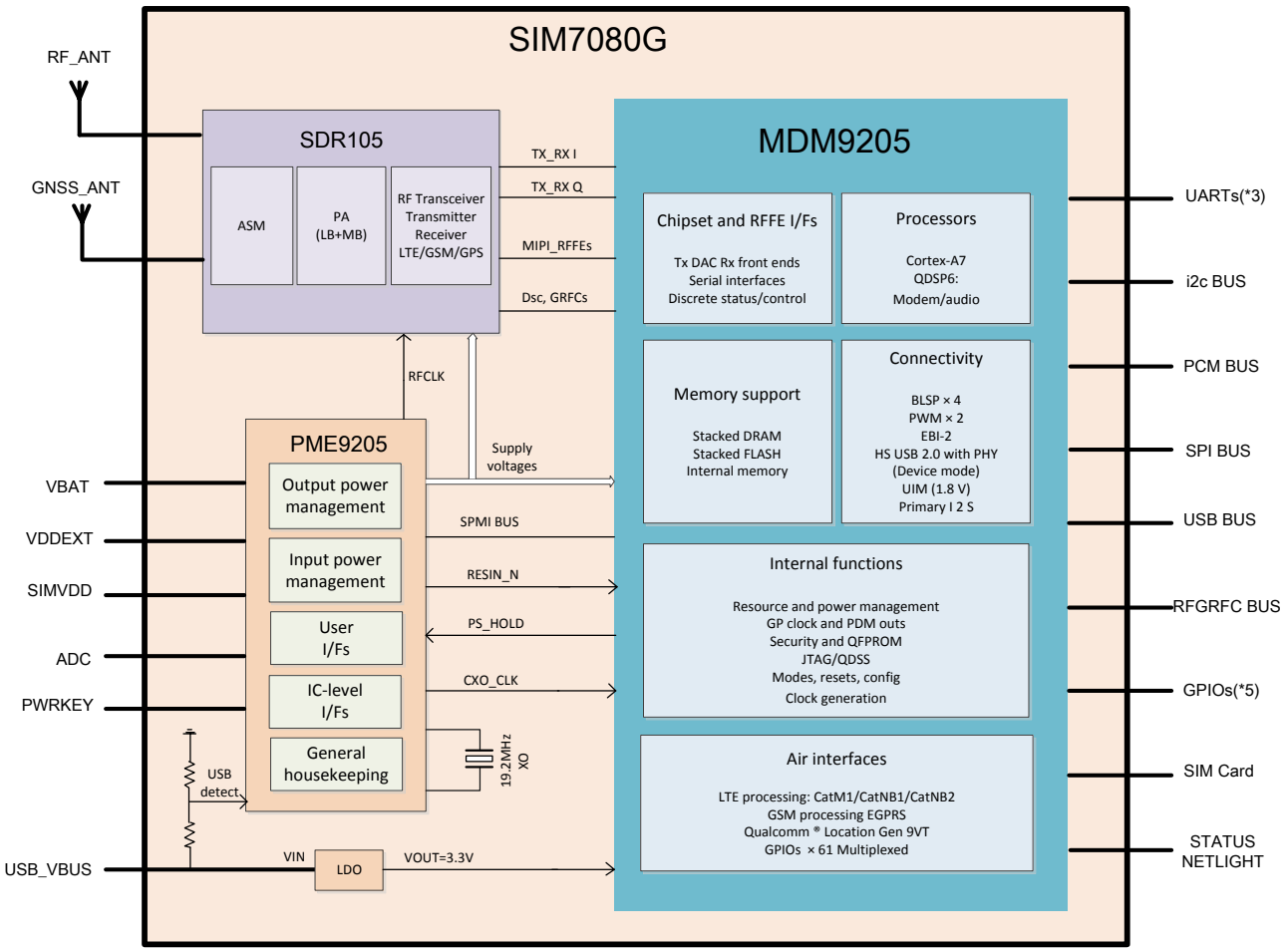

Figure 2: SIM7080G block diagram

1.4 Functional Overview

Table 2: General features

Feature	Implementation
Power supply	Power supply voltage 2.7V～4.8V. Default :3.8V
Power saving	Current in sleep mode: 1.2mA Current in PSM mode: 3uA
Radio frequency bands	Please refer to the table 1
Transmitting power	LTE power class: 5 (0.125W).
Data Transmission Throughput	LTE CAT M1:TBD Kbps (DL), TBD Kbps (UL) LTE CAT NB2: TBD Kbps (DL) ,TBD Kbps (UL)
Antenna	LTE main antenna. GNSS antenna.
GNSS	GNSS engine (GPS,GLONASS, BD and Galileo). Protocol: NMEA.
SIM interface	Support identity card: 1.8V only.
Digital audio feature	Support PCM interface. Only support PCM master mode and short frame sync
SPI interface	Support for serial data bus SPI, only used during DAM application secondary development.
UART interface	Onechannel full-function UART1 by defaultcan be used for AT communication. Baud rate: 300bps to 3686400bps. Default rate is 0bps (auto baud rate). Support auto baud rate, but only limited to 9600, 19200, 38400, 57600 and 115200 bps. Support RTS/CTS hardware handshake. Two channel 2-wire UART2 and UART3 only used as UART in DAM application when secondary development.
USB	USB 2.0 high speed interface.
Firmware upgrade	Firmware upgrade over USB interface
Physical characteristics	Size: 17.6×15.7×2.4mm Weight:1.4g±0.2g
Temperature range	operation temperature: -40℃~ +85℃ Storage temperature -45 ℃ to +90 ℃

2 Package Information

2.1 Pin Assignment Overview

The module has 77 pins and provides all the hardware interfaces of the module.

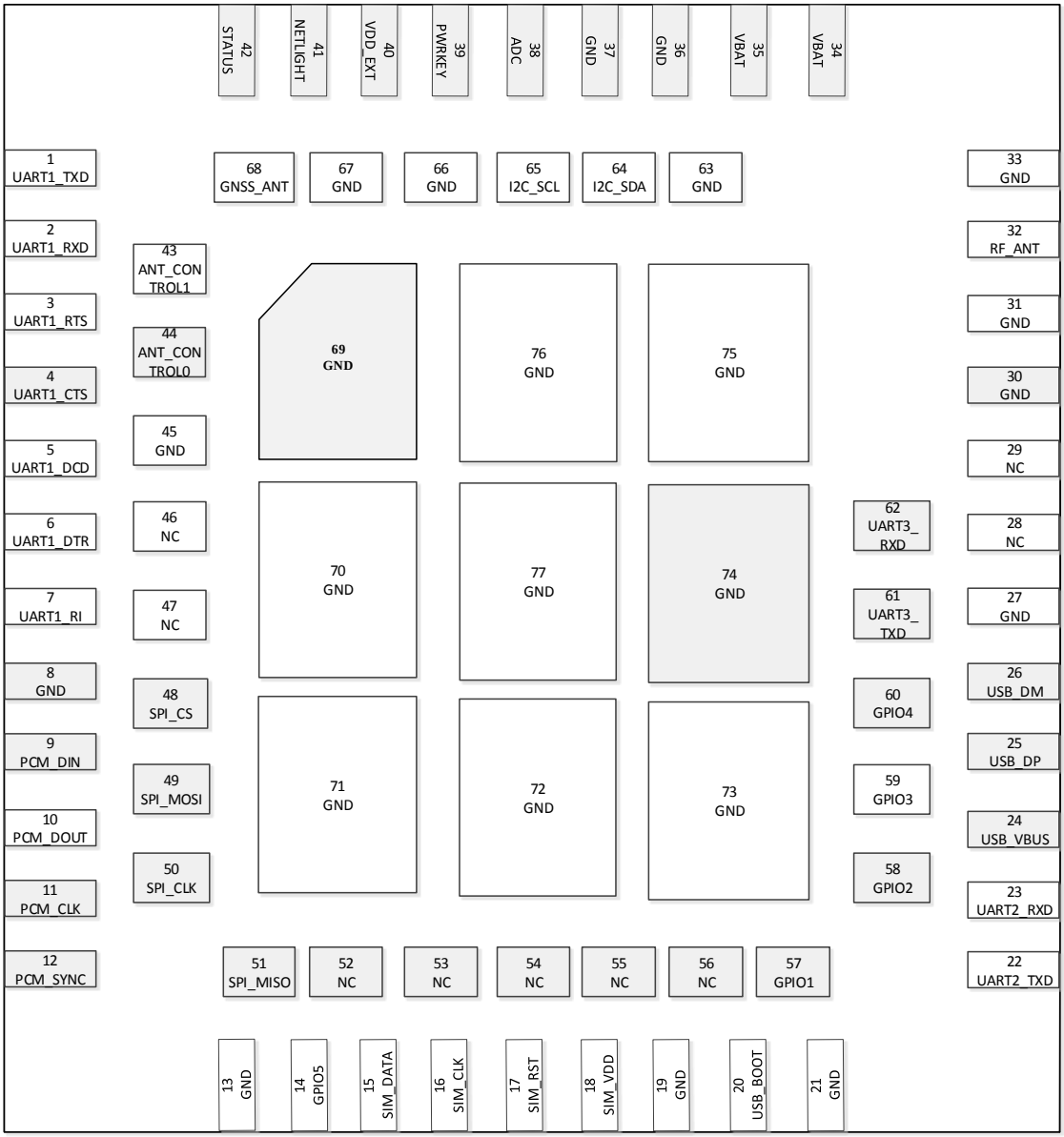

Figure 3: Pin assignment overview

Table 3: Pin definition

Pin No.	Pin Name	Pin No.	Pin Name	Pin No.	Pin Name
1	UART1_TXD	2	UART1_RXD	3	UART1_RTS
4	UART1_CTS	5	UART1_DCD	6	UART1_DTR
7	UART1_RI	8	GND	9	PCM_DIN
10	PCM_DOUT	11	PCM_CLK	12	PCM_SYNC
13	GND	14	GPIO5	15	SIM_DATA
16	SIM_CLK	17	SIM_RST	18	SIM_VDD
19	GND	20	*USB_BOOT	21	GND
22	UART2_TXD	23	UART2_RXD	24	USB_VBUS
25	USB_DP	26	USB_DM	27	GND
28	NC	29	NC	30	GND
31	GND	32	RF_ANT	33	GND
34	VBAT	35	VBAT	36	GND
37	GND	38	ADC	39	PWRKEY
40	VDD_EXT	41	NETLIGHT	42	STATUS
43	ANT_CONTROL1	44	ANT_CONTROL0	45	GND
46	NC	47	NC	48	SPI_CS
49	*SPI_MOSI	50	SPI_CLK	51	SPI_MISO
52	NC	53	NC	54	NC
55	NC	56	NC	57	GPIO1
58	GPIO2	59	GPIO3	60	GPIO4
61	UART3_TXD	62	UART3_RXD	63	GND
64	I2C_SDA	65	I2C_SCL	66	GND
67	GND	68	GNSS_ANT	69	GND
70	GND	71	GND	72	GND
73	GND	74	GND	75	GND
76	GND	77	GND		

NOTE: Before the normal power up, BOOT_CFG and SPI_MOSI cannot be pulled up.

2.2 Pin Description

Table 4: IO parameters definition

Pintype	Description
PI	Power input
PO	Power output
AI	Analog input
AIO	Analog input/output
I/O	Bidirectional input /output
DI	Digital input
DO	Digital output
DOH	Digital output with high level
DOL	Digital output with low level
PU	Pull up
PD	Pull down

Table 5: Pin description

Pin name	Pin No.	Default status	Description	Comment
Power supply				
VBAT	34,35	PI	Power supply, voltage range:2.7V～4.8V.	
VDD_EXT	40	PO	LDO power output 1.8V for other external circuits with Max 50mA current output.	This power supple only use for external GPIO pulling up or level shift circuit. If unused, keep it open.
GND	8, 13, 19, 21, 27, 30, 31, 33, 36, 37, 45, 63, 66, 67, 69, 70, 71, 72, 73,		Ground	

	74, 75, 76, 77			
System Control				
PWRKEY	39	DI,PU	System power on/off control input, active low. The efficient input low level must be below 0.4V. The efficient input high level must be higher than 1.0V. After the PWRKEY continues to pull down more than 12S, the system will automatically reset.Therefore, long-term grounding is not recommended	The level is 1.5V when this PIN is floating;
SIM interface				
SIM_DATA	15	I/O,PU	SIM Card data I/O, which has been pulled up via a 20KR resistor to SIM_VDD internally. Do not pull it up or down externally.	All lines of SIM interface should be protected against ESD.
SIM_RST	17	DO	SIM Reset	
SIM_CLK	16	DO	SIM clock	
SIM_VDD	18	PO	Power output for SIM card, its output Voltage depends on SIM card type automatically. Its output current is up to 50mA.	
USB*				
USB_VBUS	24	DI,PD	Valid USB detection input with 3.5~5.25V detection voltage	Software download interface.It is recommended to reserve interfaces or test points.
USB_DP	25	I/O	Positive line of the differential, bi-directional USB signal.	
USB_DM	26	I/O	Negative line of the differential, bi-directional USB signal.	
UART interface				
UART1_TXD	1	DOH	Transmit Data	If unused, keep them open.
UART1_RXD	2	DI,PU	Receive Data	
UART1_RTS	3	DI,PU	Request to send	
UART1_CTS	4	DOH	Clear to Send	
UART1_DCD	5	DOH	Carrier detects	
UART1_DTR	6	DI,PU	DTE get ready	
UART1_RI	7	DOH	Ring Indicator	
UART2_TXD	22	DOH	The default function is GPIO, and UART is only used for	Debug UART, the boot log will be output during bootup.If

UART2_RXD	23	DI,PU	softwaresecondary development. Cannot be used as AT	unused, keep them open.
UART3_TXD	61	DOH	The default function is GPIO.It cannot be used as AT communication port. Butitcan be used for softwaresecondary development. It can also be configured as NMEA data output for GNSS.	If unused, keep them open.
UART3_RXD	62	DI,PU		
I2C interface				
I2C_SDA	64	I/O	I2C clock output	If unused, keep open, or else pull them up via1KΩ resistors to the VDD_EXT.
I2C_SCL	65	DO	I2C data input/output	
PCM interface				
PCM_DIN	9	DI	PCM data input.	If unused, please keep them open.
PCM_DOUT	10	DO	PCM data output.	
PCM_CLK	11	DO	PCM data bit clock.	
PCM_SYNC	12	DO	PCM data frame sync signal.	
SPI interface				
SPI_CS	48	DO	Chip Select	If unused, please keep them open. ***SPI_MOSI DO NOT PULL UP DURING NORMAL POWER UP!***
SPI_MOSI	49	DO	Main Controller DATA output. Note: This chip pin has fast boot function. It cannot be pulled up before booting. Otherwise it will affect the normal boot.	
SPI_CLK	50	DO	Bus clock output	
SPI_MISO	51	DI	Main Controller DATA input	
GPIO				
NETLIGHT	41	DO	LED control output as network status indication.	If unused, keep them open.
STATUS	42	DO	Operating status output. High level: Power on and firmware ready Low level: Power off	
GPIO1	57	IO	GPIO	
GPIO2	58	IO	GPIO	
GPIO3	59	IO	GPIO	
GPIO4	60	IO	GPIO	
GPIO5	14	IO	GPIO	
RF interface				
GNSS_ANT	68	AI	GNSS antenna soldering pad	
RF_ANT	32	AIO	MAIN antenna soldering pad	

RFGRFC interface				
ANT_CONTROL1	43	IO	GRFC dedicated signals lines VC2	It can be connected to external antenna tuner to enhance antenna performance. If not used, it can be suspended.
ANT_CONTROL0	44	DO	GRFC dedicated signals lines VC1	
Other interface				
BOOT_CFG	20	DI,PD	If it needs to enterintoforcedUSB download mode, it must be pulling up this pin to VDD_EXT before press the PWRKEY. If it needs to boot up normally, please keep this pin open.	Reserve a test points for it. Keep it open. ***DO NOT PULL UP DURING NORMAL POWER UP!***
ADC	38	AI	Analog-digital converter input. voltage range:0V～1.875V.	If unused, keep them open.
NC	28, 29, 46, 47, 52, 53, 54, 55, 56		No connection.	Keep it open

Note: Please reserve a test point for BOOT_CFG and VDD_EXT. If there is no USB connector, please also reserve a test point for USB_VBUS, USB_DP, and USB_DM for Firmware upgrade.

2.3 Mechanical Information

The following figureshowsthe package outline drawing ofSIM7080G.

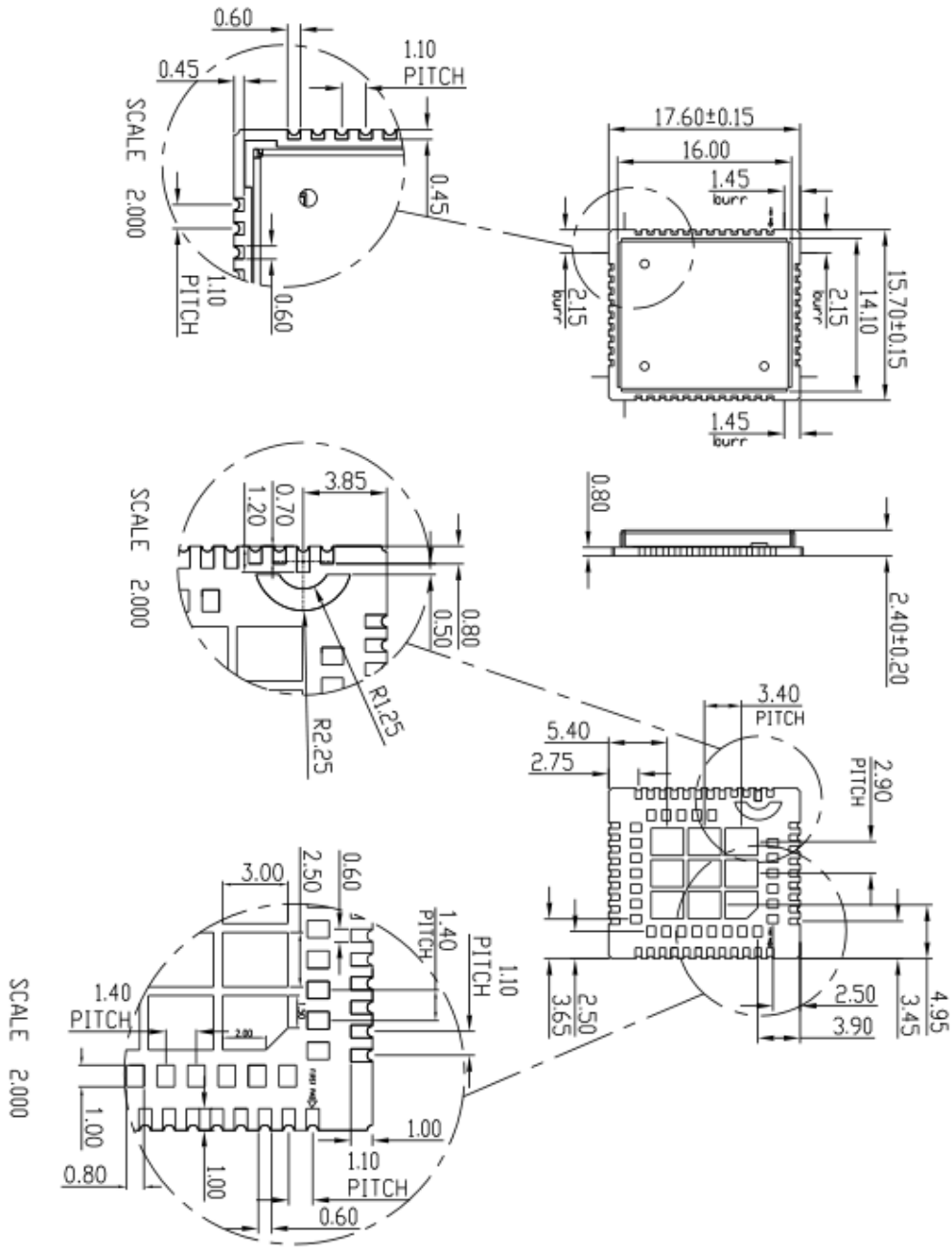

Figure 4: Dimensions (Unit: mm)

2.4 Footprint Recommendation

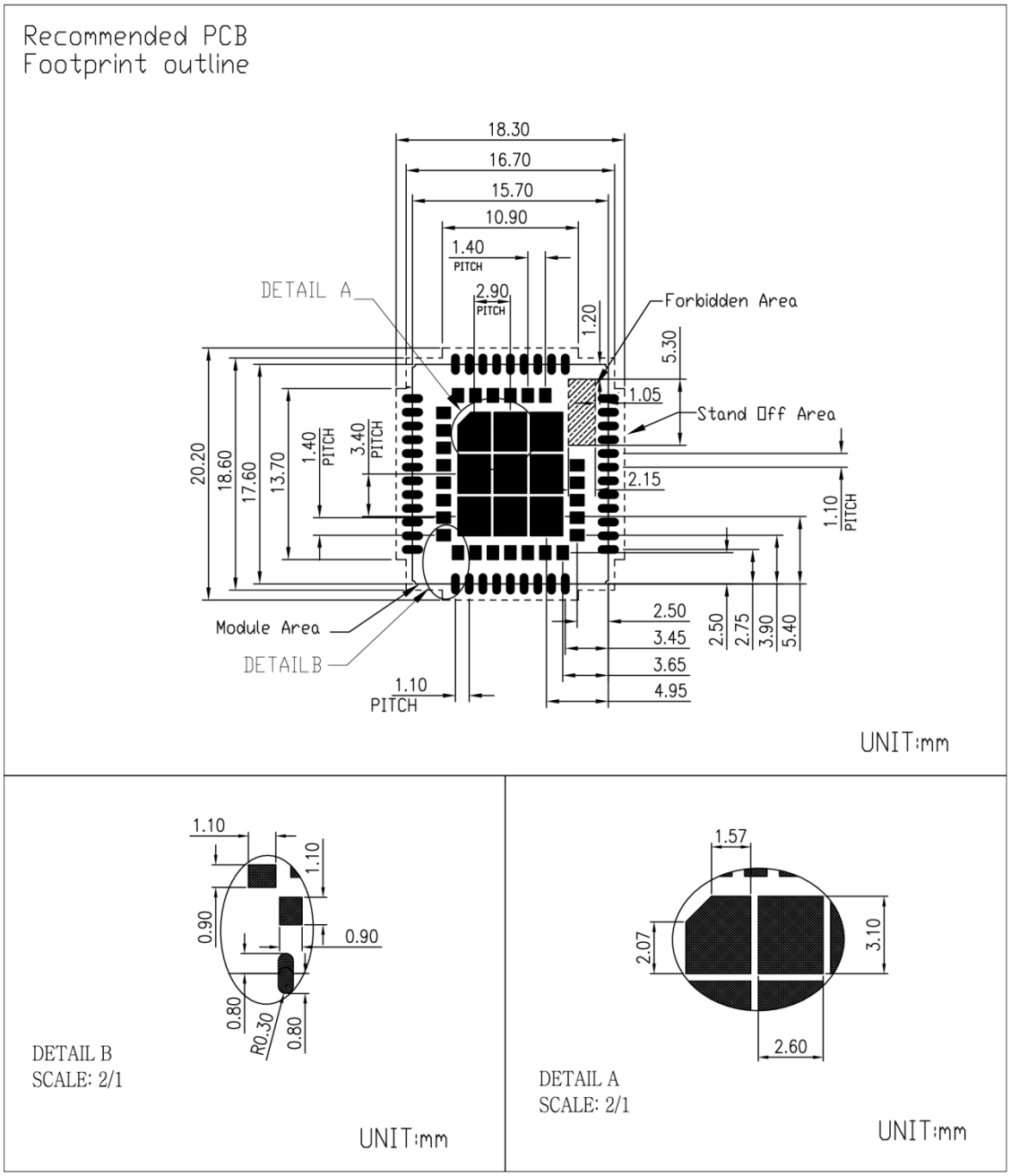

Figure 5: Footprint recommendation (Unit: mm)

3 Interface Application

3.1 Power Supply

Pin 34 and pin 35 are VBAT powerinput.

On VBAT pads, when module works on CAT-M1 or NB-IoT mode, the ripple current is up to 0.5A typically. For steadyvoltage, the power supplycapabilitymust be up to 0.5A.

Table 6: VBAT pins electronic characteristic

Symbol	Description	Min.	Typ.	Max.	Unit
VBAT	Module power voltage	2.7	3.8	4.8	V
$I_{VBAT(peak)}$	Module power peak current in CAT-M1 and NB-IoT emission mode.	-	0.5	-	A
$I_{VBAT(average)}$	Module power average current in normal mode	Please refer to the chapter 5.4			
$I_{VBAT(sleep)}$	Power supply current in sleep mode				
$I_{VBAT(power-off)}$	Module power current in power off mode.	-	-	15	uA
$I_{VBAT(PSM)}$	Module power current in PSM mode.	-	3	-	uA

3.1.1 Power Supply Design Guide

In the user's design, special attention must be paid to the design of the power supply to ensure that the drop of VBAT is not less than 2.5V even when the module's current consumption reaches the instantaneous maximum. If the voltage drop is less than 2.5V, the module may shut down due to the low voltage.

The following figure shows the recommended circuit.

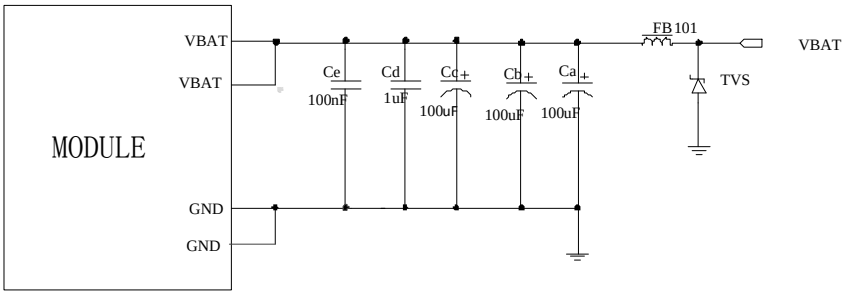

Figure 6: Power supply application circuit

In addition, for ESD protection, it is suggested to add a TVS diode near the VBAT PINs. These capacitors should be put as close as possible to VBAT pads. Also,users should keep VBAT trace on circuit board wider than 1 mm to minimize PCB trace impedance.

Table 7: Recommended TVS diode list

No.	Manufacturer	Part Number	Package
1	Prisemi	PESDHC2FD4V5B	DFN1006
2	Prisemi	PESDHC3D3V3U	SOD323
3	WILLsemi	ESD5651N-2/TR	DFN1006

3.1.2 Recommended Power Supply Circuit

If the supply voltage exceeds the supply range of VBAT, the buck circuit should be used to meet the demand of power supply. When choosing buck chip, besides considering the maximum current output capability of IC to meet the demand of SIM7080G, it is also necessary to consider the low static power consumption of IC in PSM mode.

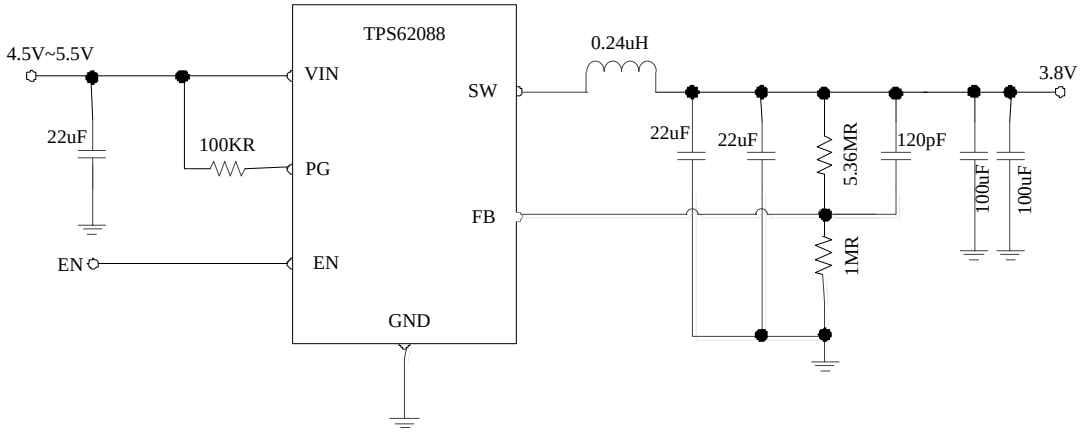

Figure 7: power supply reference circuit

3.1.3 Voltage Monitor

To monitor the VBAT voltage, the AT command “AT+CBC” can be used.

AT command “AT+CBATCHK=1” can be used to enable the overvoltage warning function and the under-voltage warning function.The default value of the overvoltagewarning function in the software is 4.85V, and the default value of the under-voltagewarning function is 2.8V. If the power supply for VBAT pins is up 4.85V or under 2.8V, module will be warning.

The AT command "AT+CBATCHK=1" also can be used to enable the overvoltage power-off function and the under-voltage power-off function. The default value of the overvoltage power-off function is 4.9V, and the default value of the under-voltage power-off function is 2.5V. If the VBAT voltage is up 4.9V or under 2.5V, module will be power off.

Note: Under-voltage warning function and under-voltage power-off function are disabled by default. For more information about these AT commands, please refer to Document [1].

3.2 Power on/Power off Function

3.2.1 Power on

SIM7080G can be powered on bybriefly pulling the PWRKEY pin to ground.
The PWRKEY pin has been pulled up with a diode to 1.8V internally, so it does not need to be pulled up externally. It is strongly recommended to putan ESD protection diode close to the PWRKEY pin, as it would strongly enhance the ESD performance of PWRKEY pin.

The PWRKEY pin has its own reset function. The reset time is determined by the internal timer (default is 15 seconds). After the PWRKEY is pulled low, the module will be reset after 15 seconds. Therefore, it is not recommended to connect PWRKEY to GND all the time in external circuit design.
Please refer to the following figure for the recommended reference circuit.

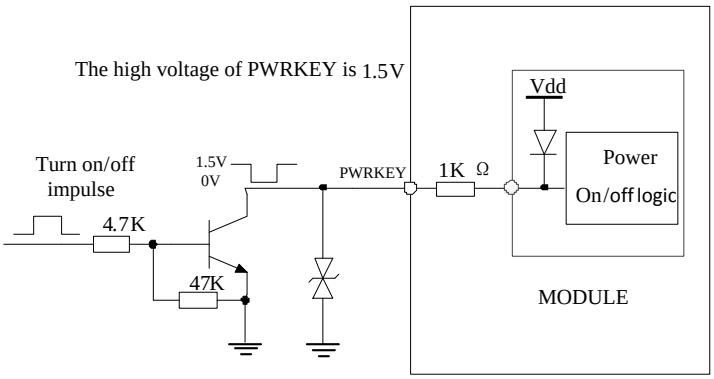

Figure 8: Reference power on/off circuit

The power-on scenarios are illustrated in the following figure.

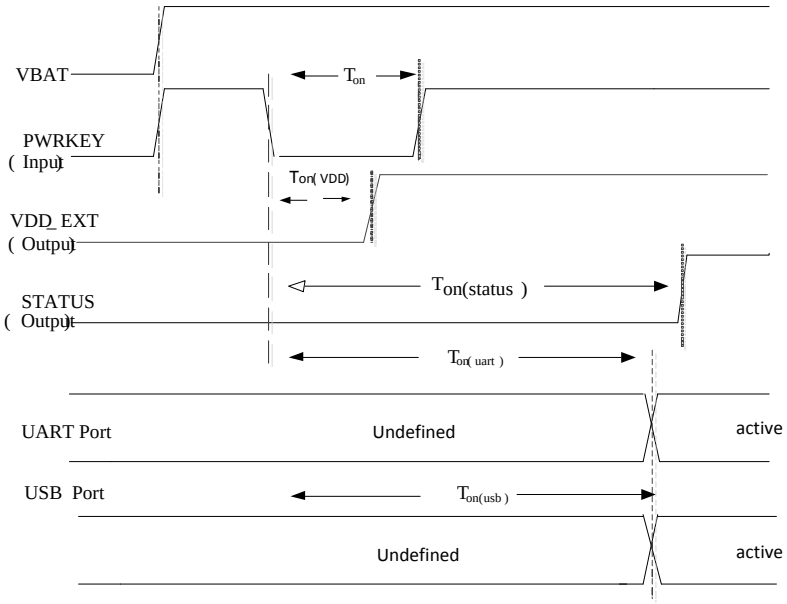

Figure 9: Power on timing sequence

Table 8: Power on timing and electronic characteristic

Symbol	Parameter	Min.	Typ.	Max.	Unit
T_{on}	The time of active low level impulse of PWRKEY pin to power on module	1	-	-	s
$T_{on(Vdd)}$	The time from power-on issue to VDD_EXT pin output high level.		64		ms
$T_{on(status)}$	The time from power-on issue to STATUS pin output high level(indicating power up ready)	2.5	-	-	s
$T_{on(uart)}$	The time from power-on issue to UART port ready	2.5	-	-	s
$T_{on(usb)}$	The time from power-on issue to USB port ready	2.5	-	-	s
V_{IH}	Input high level voltage on PWRKEY pin	1.0	1.5	1.8	V
V_{IL}	Input low level voltage on PWRKEY pin	-0.3	0	0.4	V

3.2.2 Power off

The following methods can be used to power off SIM7080G.

- Method 1: Power off SIM7080G by pulling the PWRKEY pin to ground.
- Method 2: Power off SIM7080G by AT command “AT+CPOWD=1”.
- Method 3: over-voltage or under-voltage automatic power off. The function can be enabled by AT command “AT+CBATCHK=1”. Default is disabled.

Note: For details about “AT+CPOWD” and “AT+CBATCHK”, please refer to Document [1].

These procedures will make modules disconnect from the network and allow the software to enter a safe state, and save data before module be powered off completely.

The power off scenario by pulling down the PWRKEY pin is illustrated in the following figure.

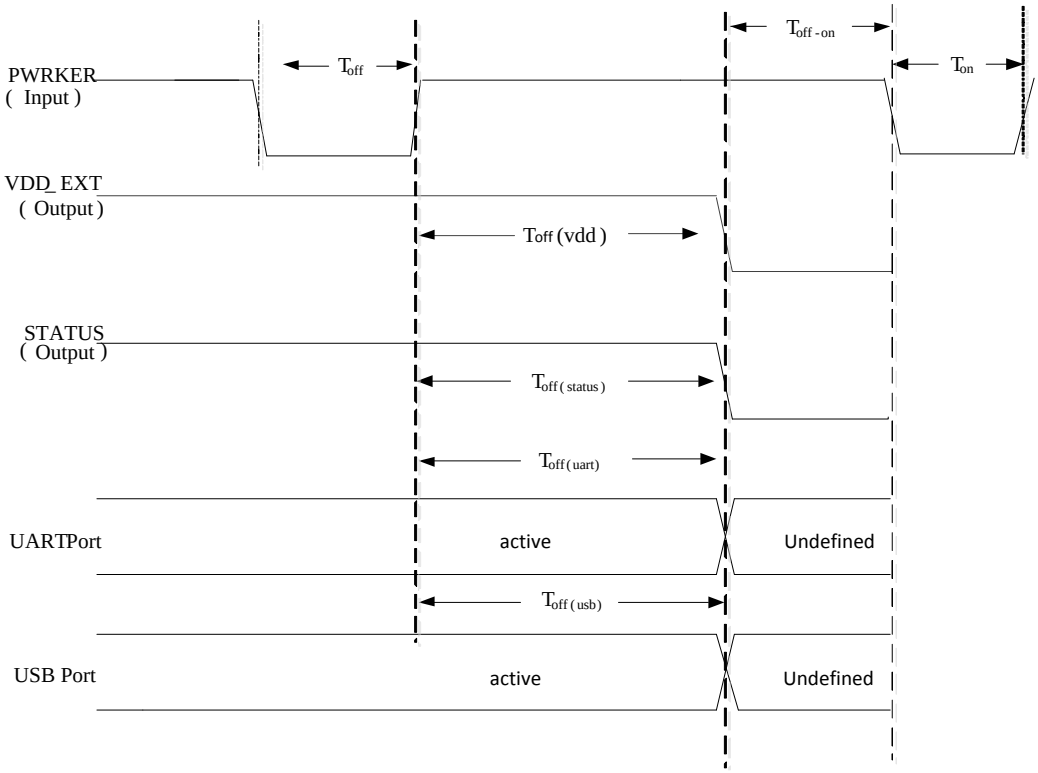

Figure 10: Power off timing sequence

Table 9: Power off timing and electronic characteristic

Symbol	Parameter	Time value			Unit
		Min.	Typ.	Max.	
T_{off}	The active low level time pulse on PWRKEY pin to power off module	1.2	-	-	s
$T_{off(vdd)}$	The time from power-off issue to VDD_EXT pin output low level	1.8	-	-	s
$T_{off(status)}$	The time from power-off issue to STATUS pin output low level(indicating power off)*	1.8	-	-	s
$T_{off(uart)}$	The time from power-off issue to UART port off	1.8	-	-	s
$T_{off(usb)}$	The time from power-off issue to USB port off	1.8	-	-	s
T_{off-on}	The buffer time from power-off issue to power-on issue	2	-	-	s

Note: The STATUS pin can be used to detect whether module is powered on or not. When module has been powered on and firmware goes ready, STATUS will be high level, or else STATUS will still low level.

3.3 UART Interface

SIM7080G can provide 3channels serial ports:

Onechannel full-function serial port UART1, it can be used for AT command communication between the module and the peripheral MCU.

One channel DEBUG serial port UART2, the boot log will be output from hear during the systemboot-up.The default function after booting is GPIO. It can be configured as a UART function,but it cannot be used for AT command communication. It is only used as UART in DAM (Downloadable Application Module) application when secondary development.

One channel 2-wire serial port UART3, the default function after booting is GPIO. It can be configured as a UART function,but it cannot be used for AT command communication. It is only used as UART in DAM (Downloadable Application Module) application when secondary development.It can also be configured as a GNSS NMEA data output port.

When the UART port is used as the AT communication port, it supports high speed mode, the baud rate is up to 4Mbps. The communication baud rates include: 0,300,600,1200,2400,4800,9600,19200,38400,57600,115200,230400,921600,2000000,3000000,3200000 and 3686400 bps. The rate 0bps marks auto baud rate.And it supports auto baud rate, but the rate only supported on 9600, 19200, 38400, 57600, 115200. If users need to change to other baud rate, it needs to switch via manual operation.

3.3.1 UART Design Guide

The following figures show the reference design.

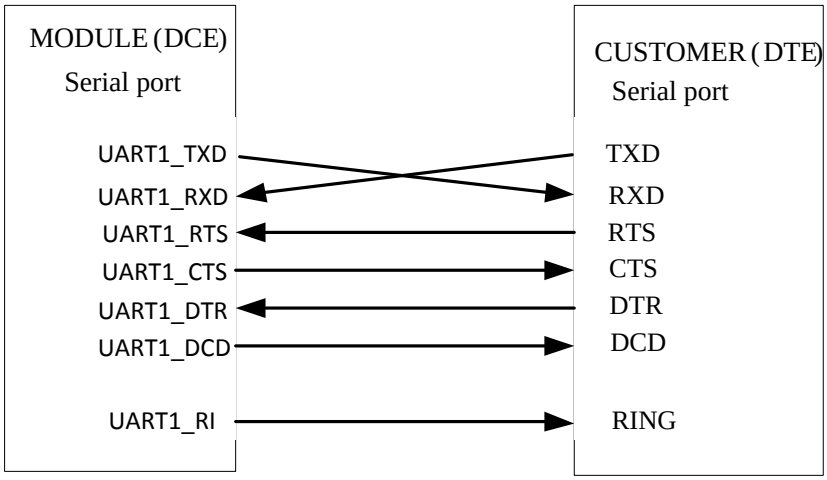

Figure 11: UART full modem

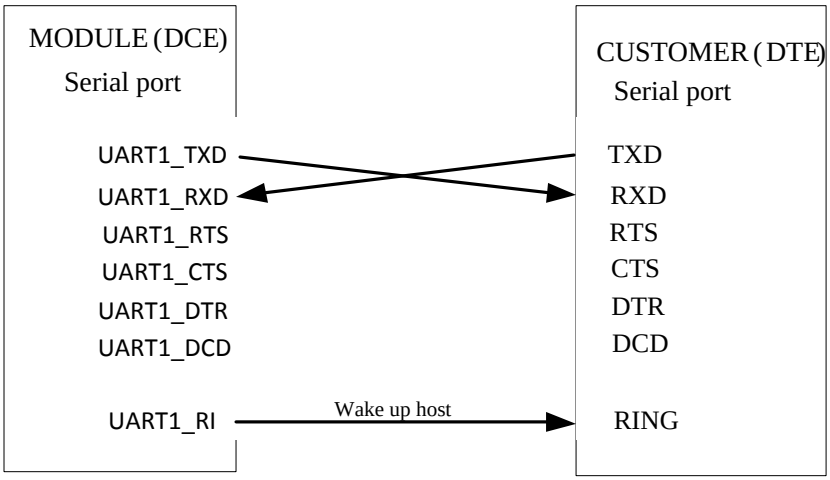

Figure 12: UART null modem

Table 10: UART electronic characteristic

Symbol	Description	Min.	Typ.	Max.	Unit
V_{IH}	UART input high level voltage	1.17	1.8	2.1	V
V_{IL}	UART input low level voltage	-0.3	0	0.63	V
V_{OH}	UART output high level voltage	1.35	1.8	1.8	V
V_{OL}	UART output low level voltage	0	0	0.45	V

The SIM7080G UART is 1.8V voltage interface. If user's UART application circuit is 3.3V voltage interface, the level shifter circuits should be used for voltage matching.The following figure showsthe voltage matching reference design.

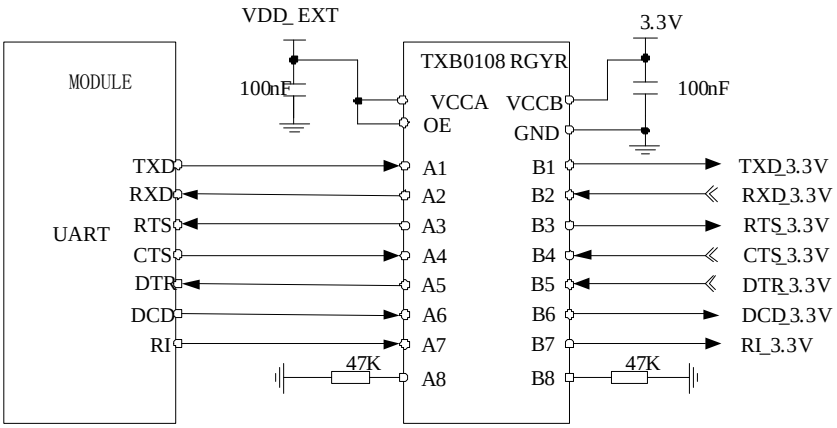

Figure 13: Reference circuit of level shift

Note: When it uses the level shifter IC, the pullupresistance on TXD_3.3V, RTS_3.3V, DCD_3.3V and RI_3.3V should not be less than 47KΩ.

3.3.2 RI and DTR Behavior

The RI pin description:

The RI pin can be used to interrupt output signal to inform the host controller such as application CPU.Before that, users must use AT command “AT+CFGRI=1” to enable this function.

Normally RI will keep high level until certain conditions such as receiving SMS, or a URC report coming, then it will output a low level pulse 120ms, in the end, it will become high level.

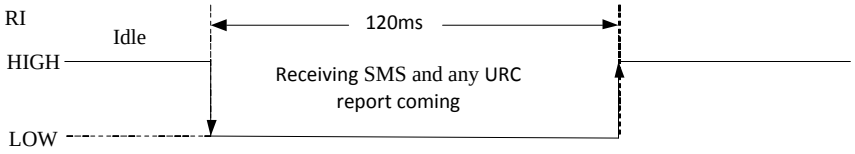

Figure 14: RI behaviour（SMS and URC report）

The DTR pin description:

After setting the AT command “AT+CSCLK=1”, and then pulling up the DTR pin, SIM7080G will enter sleep mode when module is in idle mode. In sleep mode, the UART is unavailable. When SIM7080G enters sleep mode, pulling down DTR can wake upmodule.

After setting the AT command “AT+CSCLK=0”, SIM7080G will do nothing when the DTR pin is pulling up.

Note: For more details of AT commands about UART, please refer to document [1] and [20].

3.4 USB Interface

SIM7080G has a USB2.0 interface, it can be used for software upgrade and software debugging.

USB_VBUS is the detecting signal for USB inserting. The input voltage range on the USB_VBUS pin is from 3.5V to 5.25V. If there is out of this range, it may be due to USB function unidentifiable, even damaging the module.

The reference circuit refers to the following figure.

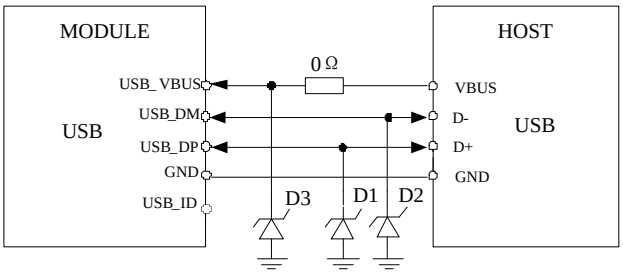

Figure 15: USB reference circuit

Because of the high speed on USB bus, more attention should be paid to the influence of the junction capacitance of the ESD component on USB data lines. Typically, the capacitance of the D1 and D2 should be less than 3pF.

D3 is suggested to select the diode with anti-ESD and voltage surge function, or customer could add a ZENER diode for surge clamping.

Note：The USB_DM and USB_DP nets must be traced by 90Ohm+/-10% differential impedance.

3.5 SIM Interface

SIM7080G only supports 1.8V SIM Cards.

Table 11: SIM electronic characteristic in 1.8V mode (SIM_VDD=1.8V)

Symbol	Parameter	Min.	Typ.	Max.	Unit
SIM_VDD	LDO power output voltage	1.75	1.8	1.95	V
V_{IH}	High-level input voltage	0.65*SIM_VDD	-	SIM_VDD +0.3	V
V_{IL}	Low-level input voltage	-0.3	0	0.35*SIM_VDD	V
V_{OH}	High-level output voltage	SIM_VDD -0.45	-	SIM_VDD	V
V_{OL}	Low-level output voltage	0	0	0.45	V

3.5.1 SIM Application Guide

It is recommended to use an ESD protection component such as ESDA6V1W5 produced by ST (www.st.com) or SMF15C produced by ON SEMI (www.onsemi.com). Note that the SIM peripheral circuit should be close to the SIM card socket.The following figure shows the 6-pin SIM card holder reference circuit.

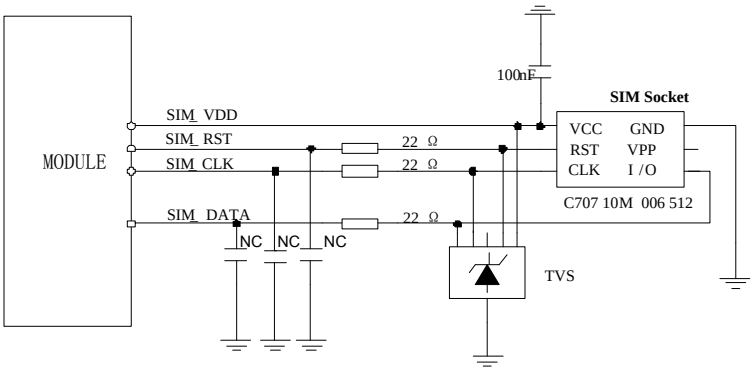

Figure 16: SIM interface reference circuit

SIM_DATA has been pulled up with a 20KΩ resistor to SIM_VDD in module, so it no need pulled up resistor anymore.

SIM_VDD needs a 100nF capacitor close to SIM socket.

SIM_CLK is very important signal, the rise time and fall time of SIM_CLK should be less than 40ns. So the junction capacity of the TVS need to less 50pF.

3.6 PCM Interface

SIM7080G provides a PCM interface for external codec, which can be used inmaster mode with short syncand 16 bits linear format.

Table 12: PCMformat

Characteristics	Specification
LineInterfaceFormat	Linear(Fixed)
Datalength	16bits(Fixed)
PCMClock/SyncSource	MasterMode(Fixed)
PCMClockRate	2048 KHz (Fixed)
PCMSyncFormat	Shortsync(Fixed)
DataOrdering	MSB

Note: For more details about PCM AT commands, please refer to document [1].

3.6.1 PCM timing

SIM7080G supports 2.048 MHz PCM data and sync timing for 16 bits linear format codec.

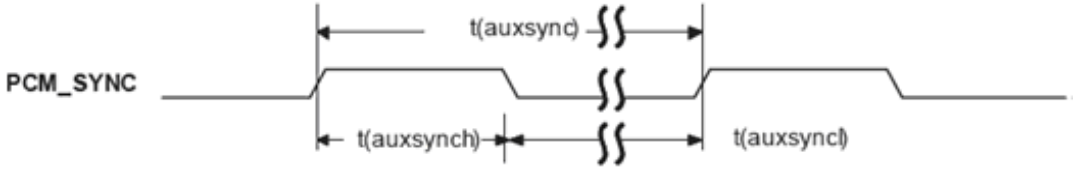

Figure 17: PCM_SYNC timing

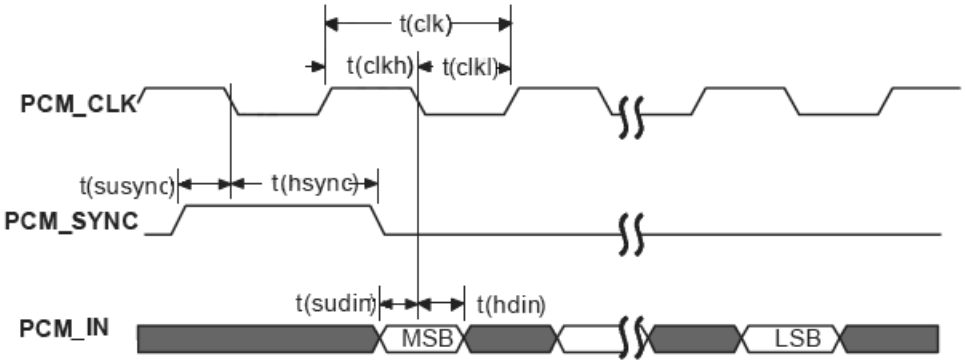

Figure 18: External codec to module timing

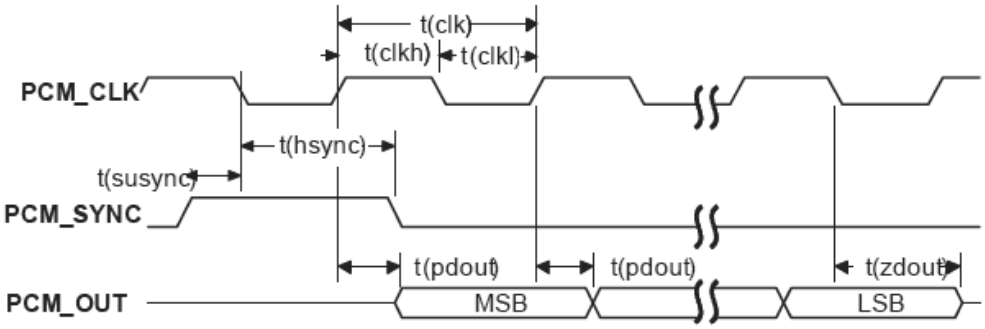

Figure 19: Module to external codec timing

Table 13: PCM timing parameters

Parameter	Description	Min.	Typ.	Max.	Unit
T(sync)	PCM_SYNC cycle time	–	125	–	µs
T(synch)	PCM_SYNC high level time	–	488	–	ns
T(syncl)	PCM_SYNC low level time	–	124.5	–	µs
T(clk)	PCM_CLK cycle time	–	488	–	ns
T(clkh)	PCM_CLK high level time	–	244	–	ns
T(clkl)	PCM_CLK low level time	–	244	–	ns
T(susync)	PCM_SYNC setup time high before falling edge of PCM_CLK	–	122	–	ns
T(hsync)	PCM_SYNC hold time after falling edge of PCM_CLK	–	366	–	ns
T(sudin)	PCM_IN setup time before falling edge of PCM_CLK	60	–	–	ns
T(hdin)	PCM_IN hold time after falling edge of PCM_CLK	60	–	–	ns
T(pdout)	Delay from PCM_CLK rising to PCM_OUT valid	–	–	60	ns
T(zdout)	Delay from PCM_CLK falling to PCM_OUT HIGH-Z	–	–	60	ns

3.6.2 PCM Application Guide

The following figure showsthe external codec reference design.

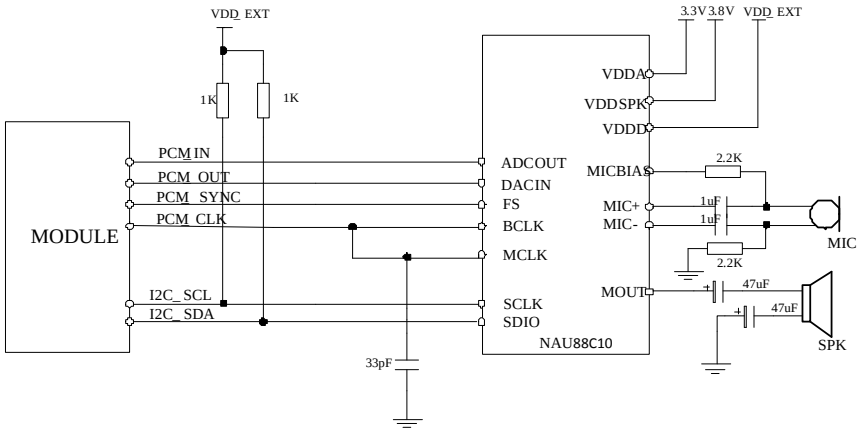

Figure 20: Audio codec reference circuit

3.7 I2C Interface

SIM7080G provides anI2C interfacewith clock rate up to 400 kbps. Its operation voltage is 1.8V.

The following figure showsthe I2C bus reference design.

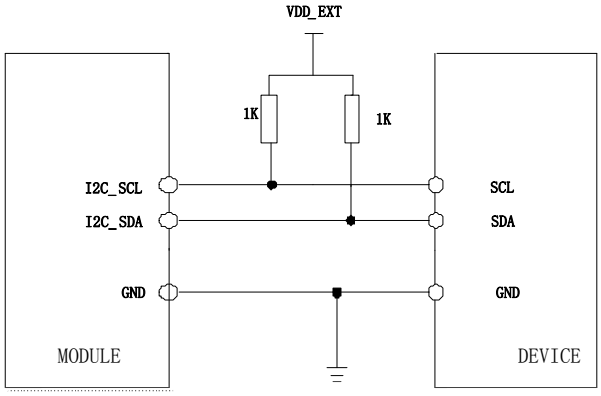

Figure 21: I2C reference circuit

The I2C signal has no pull-up resistors in module. So the pulling up resistors 1KΩ to VDD_EXTis necessary in application circuit.

3.8 SPI Interface

SIM7080G supports a set of 4-wire (MISO, MOSI, CS and CLK) SPI interfaces and supports both SPI master mode and SPI slave mode. The maximum clock frequency is up to 50MHz when operating in SPI master mode and up to 25MHz when operating in SPI Slave mode.This feature is only used in DAM (Downloadable Application Module) application when secondary development.

The following figure showsthe SPI bus reference design.

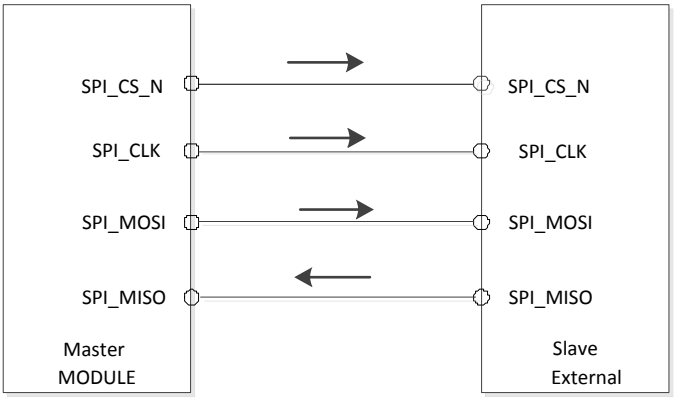

Figure 22: SPImaster mode circuit

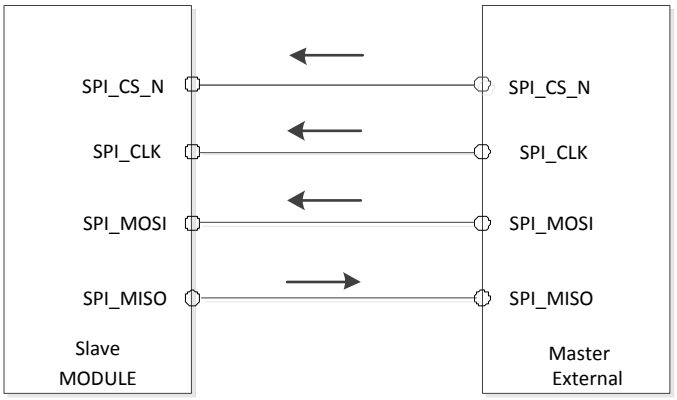

Figure 23:SPI slave mode circuit

Note: The SPI_MOSI (49 pin) function is FAST BOOT function before system boot-up, so the level on this pin cannot be high before the system boot-up, otherwise the module will not start normally.

3.9 Network status

The NETLIGHT pin is used to control Network Status LED, its reference circuit is shown in the following figure.

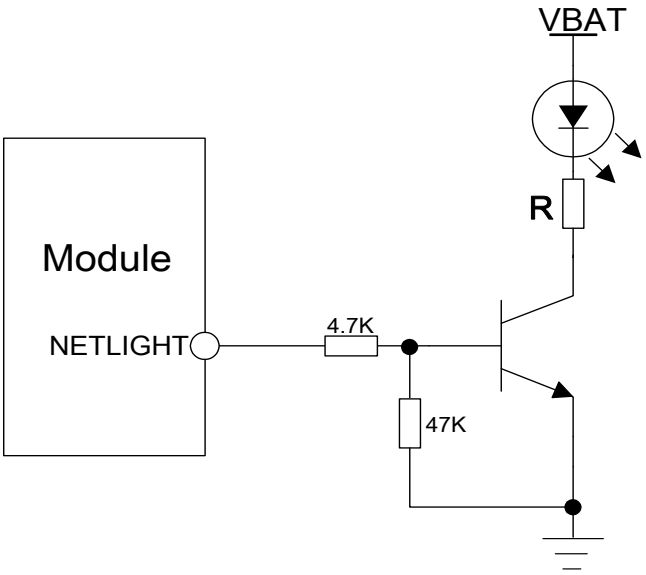

Figure 24: NETLIGHT reference circuit

Note: The value of the resistor named "R" depends on the LED characteristic.

Table 14: NETLIGHT pin status

NETLIGHT pin status	Module status
64ms ON, 800ms OFF	No registered network
64ms ON, 3000ms OFF	Registered network (PS domain registration success)
64ms ON, 300ms OFF	Data transmit (PPP dial-up state and use of data services such as internal TCP/FTP/HTTP)
OFF	Power off or PSM mode

Note: NETLIGHT output low level as "OFF"and high level as "ON".

3.10 ADC interface

SIM7080G has a dedicated ADC pin. It is available fordigitizing analog signals such as battery voltage and so on. Its input voltage range is from 0V to 1.8v. That is the maximum measurement range of ADC cannot exceed 1.8V. If the input voltage of ADC PIN exceeds its range, it is necessary to implement the resistance partial pressure on the hardware

The electronic specifications are shown in the following table.

Table 15: ADC electronic characteristics

Characteristics	Min.	Typ.	Max.	Unit
Input Range	0		1.875	V
Internal pull-up resistor		400		KΩ
Input serial resistance	1	–	–	MΩ

Note: "AT+CADC" can be used to read the voltage of the ADC pin, for more details, please refer to document [1].

3.11 LDOoutput

SIM7080G has a LDO power output namedVDD_EXT. The output voltage is 1.8V. This voltage can only be pulled up for the external GPIO or power supply for the level conversion circuit.

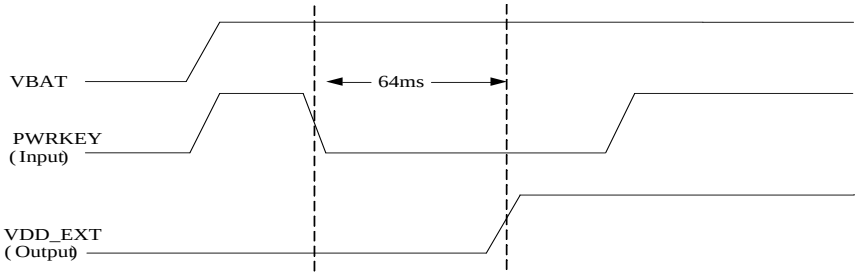

Figure 25: Power on sequence of the VDD_EXT

Table 16: Electronic characteristic

Symbol	Description	Min.	Typ.	Max.	Unit
V_{VDD_EXT}	Output voltage	1.75	1.8	1.85	V
I_O	Output current	-	-	50	mA

Note: The VDD_EXT is used to the IO power in the module. The Output voltage is not supported to adjust.

3.12 RFGRFC Interface

SIM7080G provides a set of antenna GRFCdedicated signals lines. It can be used to control the antenna tuner to improve antenna performance.

Thereference circuit is shown in the following figure:

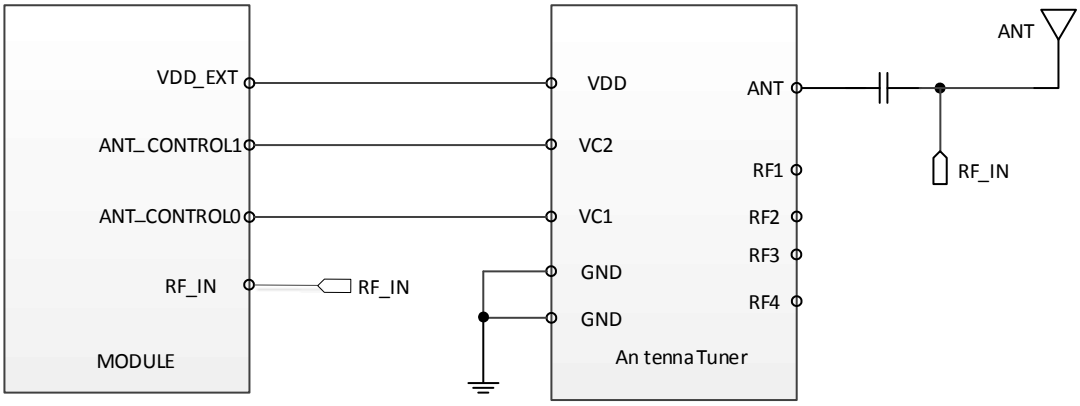

Figure 26：RFGRFC interface reference circuit

4 RF Specifications

4.1 LTE RF Specifications

Table 17: Conducted transmission power

CAT-NB2

Frequency	Power	Min.
LTE-FDD B1	20dBm +/-2.7dB	<-40dBm
LTE-FDD B2	20dBm +/-2.7dB	<-40dBm
LTE-FDD B3	20dBm +/-2.7dB	<-40dBm
LTE-FDD B4	20dBm +/-2.7dB	<-40dBm
LTE-FDD B5	20dBm +/-2.7dB	<-40dBm
LTE-FDD B8	20dBm +/-2.7dB	<-40dBm
LTE-FDD B12	20dBm +/-2.7dB	<-40dBm
LTE-FDD B13	20dBm +/-2.7dB	<-40dBm
LTE-FDD B18	20dBm +/-2.7dB	<-40dBm
LTE-FDD B19	20dBm +/-2.7dB	<-40dBm
LTE-FDD B20	20dBm +/-2.7dB	<-40dBm
LTE-FDD B25	20dBm +/-2.7dB	<-40dBm
LTE-FDD B26	20dBm +/-2.7dB	<-40dBm
LTE-FDD B28	20dBm +/-2.7dB	<-40dBm
LTE-FDD B66	20dBm +/-2.7dB	<-40dBm
LTE-FDD B71	20dBm +/-2.7dB	<-40dBm

CAT-M1

Frequency	Power	Min.
LTE-FDD B1	20dBm +/-2.7dB	<-40dBm
LTE-FDD B2	20dBm +/-2.7dB	<-40dBm
LTE-FDD B3	20dBm +/-2.7dB	<-40dBm
LTE-FDD B4	20dBm +/-2.7dB	<-40dBm
LTE-FDD B5	20dBm +/-2.7dB	<-40dBm
LTE-FDD B8	20dBm +/-2.7dB	<-40dBm
LTE-FDD B12	20dBm +/-2.7dB	<-40dBm
LTE-FDD B13	20dBm +/-2.7dB	<-40dBm
LTE-FDD B14	20dBm +/-2.7dB	<-40dBm
LTE-FDD B18	20dBm +/-2.7dB	<-40dBm
LTE-FDD B19	20dBm +/-2.7dB	<-40dBm
LTE-FDD B20	20dBm +/-2.7dB	<-40dBm
LTE-FDD B25	20dBm +/-2.7dB	<-40dBm
LTE-FDD B26	20dBm +/-2.7dB	<-40dBm
LTE-FDD B27	20dBm +2.7/-3.2dB	<-40dBm
LTE-FDD B28	20dBm +/-2.7dB	<-40dBm
LTE-FDD B66	20dBm +/-2.7dB	<-40dBm

**** Note：The max power is tested result for 1RB in CAT-M1 and single-tone in CAT-NB2. MPR for CAT-M1 please refer to 6.2.3EA.5 part for 3GPP. Multi-tone test results please refer to part 6.2.3F.3 for CAT-NB2.***

Table 18:Maximum Power Reduction (MPR) for UE category NB2&M1 Power Class 5

CAT-NB2

Modulation	QPSK		
Tone positions for 3 Tones allocation	0-2	3-5 and 6-8	9-11
MPR	≤ 0.5 dB	0 dB	≤ 0.5 dB
Tone positions for 3 Tones allocation	0-5 and 6-11		
MPR	≤ 1 dB	≤ 1 dB	
Tone positions for 3 Tones allocation	0-11		
MPR	≤ 2 dB		

CAT-M1

Modulation	Channel bandwidth / Transmission bandwidth (N_{RB})						MPR (dB)
	1.4 MHz	3.0 MHz	5 MHz	10 MHz	15 MHz	20 MHz	
QPSK	>2	>2	>3	>5	-	-	≤ 1
QPSK	>5	>5	-	-	-	-	≤ 2
16 QAM	≤ 2	≤ 2	>3	>5	-	-	≤ 1
16QAM	>2	>2	>5	-	-	-	≤ 2

Table 19: Operating frequencies

Frequency	Receiving	Transmission
BAND Information	Refers to Table 1	
GPS L1 BAND	1574.4 ～1576.44 MHz	-
GLONASS	1598 ～1606 MHz	-
BD	1559 ～1563 MHz	-
Galileo	1575.42±1.023MHz	-

Table 20: E-UTRA operating bands

E-UTRA	UL Freq.	DL Freq.	Duplex Mode
1	1920 ~1980 MHz	2110 ~2170 MHz	HD-FDD
2	1850~1910MHz	1930~1990MHz	HD-FDD
3	1710 ~1785 MHz	1805 ~1880 MHz	HD-FDD
4	1710~1755MHz	2110~2155MHz	HD-FDD
5	824 ~849 MHz	869 ~894 MHz	HD-FDD
8	880 ~915 MHz	925 ~960 MHz	HD-FDD
12	699~716MHz	729~746MHz	HD-FDD
13	777~787MHz	746~756MHz	HD-FDD
14	788~798MHz	758~768MHz	HD-FDD
18	815 ~830 MHz	860 ~875 MHz	HD-FDD
19	830 ~845 MHz	875 ~890 MHz	HD-FDD
20	832~862MHz	791~821MHz	HD-FDD
25	1850~1915MHz	1930~1995MHz	HD-FDD
26	814 ~849 MHz	859 ~894 MHz	HD-FDD
27	807~824MHz	852~869MHz	HD-FDD
28	703~748MHz	758~803MHz	HD-FDD
66	1710~1780MHz	2110~2180MHz	HD-FDD
71	663~698MHz	617~652MHz	HD-FDD
85	698~716MHzHz	728~746MHz	HD-FDD

Table 21: Conducted receive sensitivity

Frequency	Receive sensitivity(Typical)	Receive sensitivity(MAX)
LTE HD-FDD	Reference【Table 22】【Table 23】	3GPP

Table 22: CAT-M1 Reference sensitivity (QPSK)

E-UTRA Band	REFSENS MAX(dBm) 3GPP Request	REFSENS Typical(dBm)	Duplex Mode
1	-103	-109	HD-FDD
2	-101	-107	HD-FDD
3	-100	-107	HD-FDD
4	-103	-107	HD-FDD
5	-101.5	-107	HD-FDD
8	-100.5	-107	HD-FDD
12	-100	-106	HD-FDD
13	-100	-106	HD-FDD
14	-100	-103	HD-FDD
18	-103	-107	HD-FDD
19	-103	-107	HD-FDD
20	-100.5	-107	HD-FDD
25	-99.5	-103	HD-FDD
26	-101	-108	HD-FDD
27	-101.5	-108	HD-FDD
28	-101.5	-107	HD-FDD
66	NA	-107	HD-FDD
85	-100	-107	HD-FDD

Table 23: CAT-NB2Reference sensitivity (QPSK)

Operating band	REFSENS MAX(dBm) 3GPP Request	REFSENS Typical(dBm)	REFSENSTypical Repetition 12/7/1/128 [EPRE dbm/15KHz]①
1	-108.2	-116	-131
2	-108.2	-115	-130
3	-108.2	-116	-131
4	-108.2	-116	-130
5	-108.2	-115	-129
8	-108.2	-115	-130
12	-108.2	-115	-130
13	-108.2	-115	-130
18	-108.2	-115	-129
19	-108.2	-114	-128
20	-108.2	-114	-128
25	-108.2	-115	-130
26	-108.2	-115	-129
28	-108.2	-116	-130
66	-108.2	-115	-129
71	-108.2	-113	-129
85	-108.2	-115	-130

Note:①.The 12/7/1/128 of the REFSENSTypicalRepeated 12/7/1/128 [EPRE dbm/15KHz means Subcarriers=12, MCS.TBS=7, #SF/#RU=1, #Repetition=128.

4.2 LTE Antenna Design Guide

Users should connect antennas to SIM7080G's antenna pads through micro-strip line or other types of RF trace and the trace impedance must be controlled in 50Ω. SIMCom recommends that the total insertion loss between the antenna pads and antennas should meet the following requirements:

Table 24: Traceloss

Frequency	Loss
700MHz-960MHz	<0.5dB
1710MHz-2170MHz	<0.9dB
2300MHz-2650MHz	<1.2dB

To facilitate the antenna tuning and certification test, a RF connector and an antenna matching circuit should be added. The following figure is the recommended circuit.

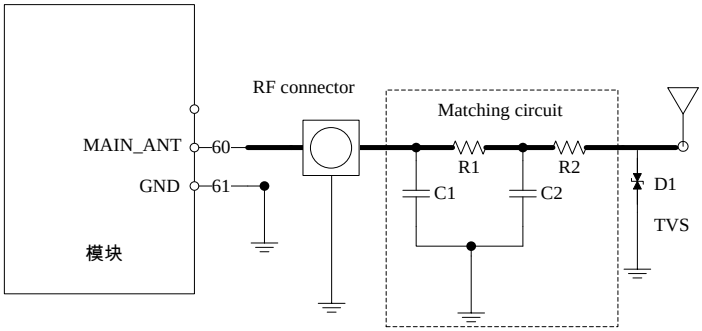

Figure 27: Antenna matching circuit (MAIN_ANT)

In above figure, the components R1,C1,C2 and R2 are used for antenna matching, the values of components can only be achieved after the antenna tuning and usuallyprovided by antenna vendor. By default, the R1, R2 are 0Ω resistors, and the C1, C2 are reserved for tuning. The component D1 is a TVS for ESD protection, and it is optional for users according to application environment.
The RF test connector is used for the conducted RF performance test, and should be placed as close as to the module's MAIN_ANT pin. The traces impedance between SIM7080G and antenna must be controlled in 50Ω .
Two TVS are recommended in the table below.

Table 25: Recommended TVS

Package	Part Number	Vender
0201	LXES03AAA1-154	Murata
0402	LXES15AAA1-153	Murata

4.3 GNSS

SIM7080G merges GNSS(GPS/GLONASS/BD) satellite and network information to provide a high-availability solution that offers industry-leading accuracy and performance. This solution performs well, even in very challenging environmental conditions where conventional GNSS receivers fail, and provides a platform to enable wireless operators to address both location-based services and emergency mandates.

4.3.1 GNSS Technical specification

- Tracking sensitivity: -159 dBm（GPS）/ TBD dBm（GLONASS）/TBD (BD)
- Cold-start sensitivity: -148.5 dBm
- Accuracy (Open Sky): 0.74m (CEP50)
- TTFF (Open Sky) : Hot start <1s, Cold start<30s
- Receiver Type: 16-channel, C/A Code
- GNSS L1 Frequency: 1575.42±1.023MHz
- GLONASS: 1597.5~1605.8 MHz
- BD: 1559.05~1563.14 MHz
- Galileo L1:1575.42±1.023MHz
- Update rate: Default 1 Hz
- GNSS data format: NMEA-0183
- GNSS Current consumption :16mA (GSM/LTE Sleep, in total on VBAT pins)
- GNSS antenna: Passive/Active antenna

Note: If the antenna is active type, the power should be given by main board because there is no power supply on the GNSS antenna pad. If the antenna is passive,it is suggested that the external LNA should be used.

4.3.2 GNSS Application Guide

Users can adopt an active antenna or a passive antenna to SIM7080G. If using a passive antenna, an external LNA is a must to get better performance. The following figures are the reference circuits.

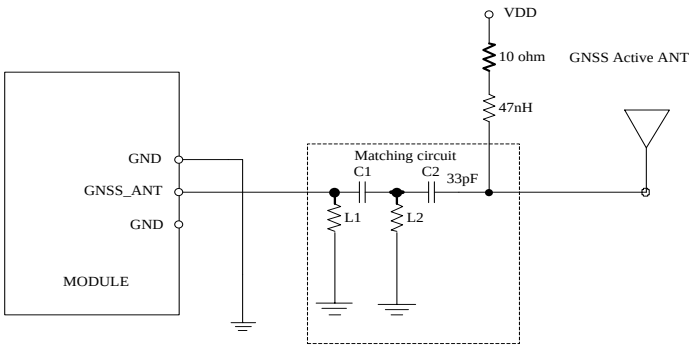

Figure 28: Active antenna circuit

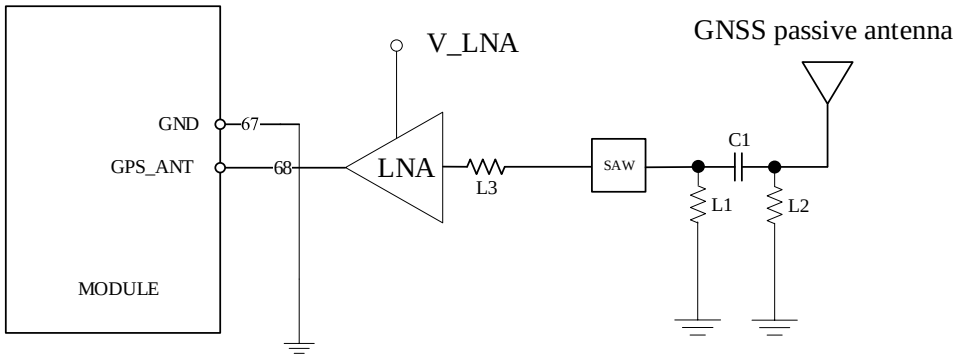

Figure 29: Passive antenna circuit (Default)

In above figures, the components C1, L1 and L2 are used for antenna matching.Usually, the values of the components can only be achieved after antenna tuning and usually provided by antenna vendor.C2 is used for DC blocking. L3 is the matching component of the external LNA, and the value of L3 is determined by the LNA characteristic and PCB layout.Both VDD of active antenna and V_LNA need external power supplies which should be considered according to active antenna and LNA characteristic. LDO/DCDC is recommended to get lower current consuming by shutting down active antennas and LNA when GNSS is not working.

GNSS can be tested by NMEA port. NMEAsentences can be obtained through UART or USBautomatically. NMEA sentences include GSV, GGA, RMC, GSA, and VTG. Before using GNSS, user should configure SIM7080G in proper operating mode by AT command. Please refer to related documents for details. SIM7080G can also get position location information through AT directly.

Note:

1. ***GNSS is closed by default and can be started by "AT+CGNSPWR=1". The AT command has two parameters, the first is on/off, and the second is GNSS mode. Default mode is standalone mode.***

AGPS mode needs more support from the mobile telecommunication network. Please refer to document [21] for more details.

2. If the passive antenna is used, put the LNA close to the antenna.

3. ***Make sure there are no noise signals around GNSS antenna.***

4.4 RF traces note

4.4.1 RF traces layout

- Keep the RF trace from module ant pin to antenna as short as possible
- RF trace should be 50 Ω either on the top layer or in the inner layer
- RF trace should be avoided right angle and sharp angle.
- Put enough GND vias around RF traces.
- RF trace should be far away from other high speed signal lines.

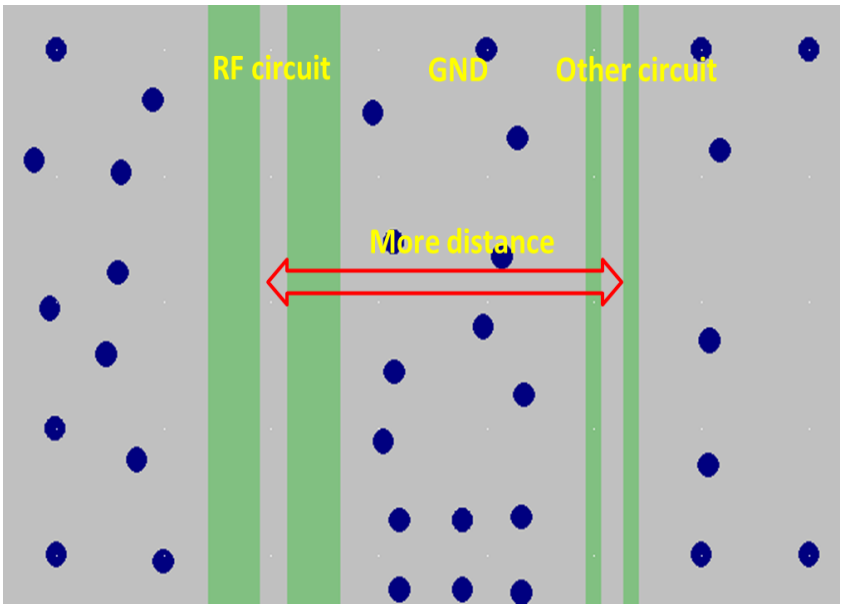

Figure 30: RF trace should be far away from other high speed signal lines

- Avoiding the paroling rout of other system antennas nearly.
- There should be some distance from The GND to the inner conductor of the SMA connector. It is better to keep out all the layers from inner to the outer conductor.

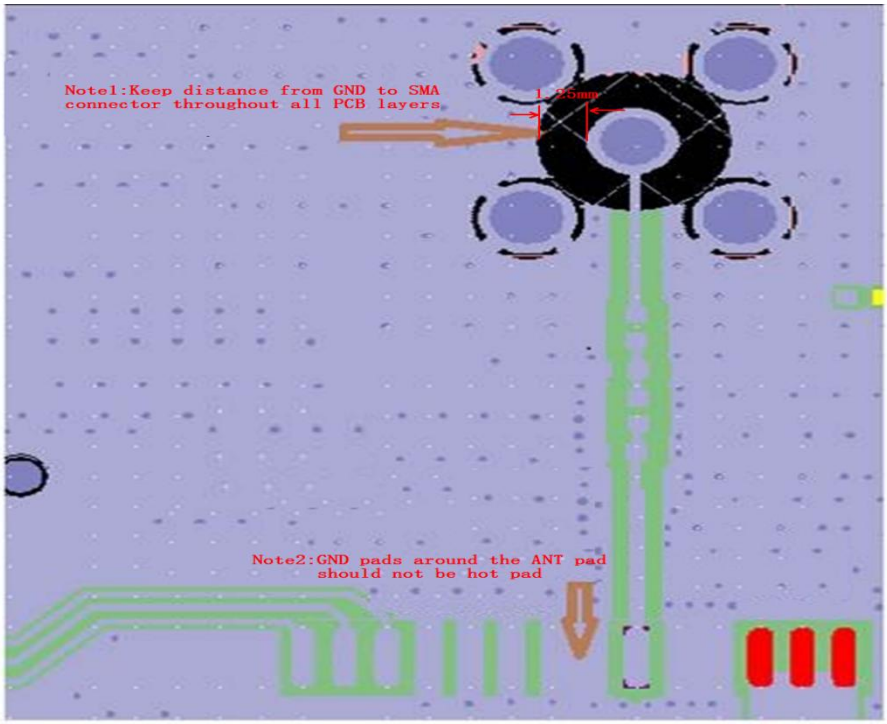

Figure 31: The distance between GND to the inner conductor of SMA

- GND pads around the ANT pad should not be hot pad to keep the GND complete.

4.4.2 LTE ANT and other system ANT decoupling

- Make sure the efficiency of LTE main ANT more than 40%
- Keep the decoupling of LTE main ANT to WLAN ANT more than 15dB
- Keep the decoupling of LTE main ANT to GNSS ANT more than 30dB

Note:The decoupling value can be provided by ANT adventure. More details can refer to thedocument [22].

5 Electrical Specifications

5.1 Absolute maximum ratings

Absolute maximum rating for digital and analog pins of SIM7080G are listed in the following table:

Table 26: Absolute maximum ratings

Parameter	Min.	Typ.	Max.	Unit
Voltage on VBAT	-0.3	-	6.0	V
Voltage on USB_VBUS	-0.3	-	6.0	V
Voltage at digital pins (RESET,GPIO,I2C,UART,PCM)	-0.3	-	2.1	V
Voltage at PWRKEY	-0.3	-	2.1	V
ADC	-0.3	-	1.875	V

The absolute parameter is tested when VBAT has the power but the PWRKEY has no pulled down. If it is over the range, the module will be damage. If the power supply on VBAT pin had been shut down, and the other pin should not have the voltage. Otherwise, it may lead to abnormally boot up or damage the module.

5.2 Operating conditions

Table 27: Recommended operating ratings

Parameter	Min.	Typ.	Max.	Unit
Voltage at VBAT	2.7	3.8	4.8	V
Voltage at USB_VBUS	3.5	5.0	5.25	V

Make sure that the voltage on the VBAT pins will never drop below 2.7V, even during a transmit burst. Otherwise, module will be power down.

Table 28: 1.8V Digital I/O characteristics*

Parameter	Description	Min.	Typ.	Max.	Unit
V_{IH}	High-level input voltage	1.17	1.8	2.1	V
V_{IL}	Low-level input voltage	-0.3	0	0.63	V
V_{OH}	High-level output voltage	1.35	-	1.8	V
V_{OL}	Low-level output voltage	0	-	0.45	V
I_{OH}	High-level output current(no pull down resistor)	-	2	-	mA
I_{OL}	Low-level output current(no pull up resistor)	-	-2	-	mA
I_{IH}	Input high leakage current (no pull down resistor)	-	-	1	uA
I_{IL}	Input low leakage current(no pull up resistor)	-1	-	-	uA

Note: These parameters are for digital interface pins, such asGPIOs (including NETLIGHT and STATUS), I2C, UART, PCM, SPI and BOOT_CFG.

The operating temperature of SIM7080G is listed in the following table.

Table 29: Operating temperature

Parameter	Min.	Typ.	Max.	Unit
operation temperature	-40	25	85	℃
Storage temperature	-45	25	+90	℃

Note: Module is able to make and receive voice calls, data calls, SMS and make GPRS/LTE traffic in -40℃ ~ +85℃. The performance will be reduced slightly from the 3GPP specifications if the temperature is outside the normal operating temperature range and still within the extreme operating temperature range.

5.3 Operating Mode

5.3.1 Operating Mode Definition

The table belowsummarizes the various operating modes of SIM7080G product.

Table 30: Operating mode Definition

Mode		Function
Normal operation	Sleep	In this case, the current consumption of module will be reduced to the minimal level and the module can still receive paging message and SMS.
	Idle	Software is active. Module is registered to the network, and the module is ready to communicate.
	Cat-M1 Voice Call	Connection between two subscribers is in progress. In this case, the power consumption depends on network settings.
	Standby	Module is ready for data transmission, but no data is currently sent or received. In this case, power consumption depends on network settings.
	Data transmission	There is data transmission in progress. In this case, power consumption is related to network settings (e.g. power control level); uplink/downlink data rates, etc.
Minimum functionality mode		AT command “AT+CFUN=0” and “AT+CSCLK=1”can be used to set the module to a minimum functionality mode without removing the power supply. In this mode, the RF part of the module will not work and the SIM card will not be accessible, but the serial port and USB portare still accessible. The power consumption in this mode is lower than normal mode.
Flight mode		AT command “AT+CFUN=4”can be used to set the module to flight mode without removing the power supply. In this mode, the RF part of the module will not work,but the serial port and USB portare still accessible. The power consumption in this mode is lower than normal mode.
Power Saving Mode (PSM)		Setting AT command” AT+CPSMS=1” can be enable the PSM mode. In this mode, The mode is similar to power-off. But the module remains registered on the network and there is no need to re-attach or re-establish the network connections. And all of the functions will be unavailableexcept the RTC function. PWRKEY and timer expires can wake up the module.
Extended Mode DRX (e-DRX)		In idle or sleep mode, module and the network may negotiate over non-access stratum signaling the use of extended mode DRX for

	reducing power consumption.

5.3.2 Sleep mode

Module can enter into sleep mode for reducing its power consumption in idle module. In sleep mode, the current consumption of module will be reduced to very small level, and module can still receive paging message and SMS.

Several hardware and software conditions must be satisfied together in order to let SIM7080G enter sleep mode:

- USB condition: Connected USB can't enter into sleep mode. So if module wants to enter into sleep mode, it must disconnect the power supply for USB_VBUS first.
- Software condition: If module wants to enter into sleep mode, AT comment "AT+CSCLK=1" must be set to close some clock in the module. If the value "AT+CSCLK" is "0", module will never enter into sleep mode.
- UART condition: If module wants to enter into sleep mode, AT comment "AT+CSCLK=1" must be set to close some clock in the module. If the value "AT+CSCLK" is "0", module will never enter into sleep mode.

If it meets all the conditions at the same time, module will enter into sleep mode. In sleep mode, the UART is unavailable. If the host need to communicate with module, it need to pull down DTR can wake upmodule.

5.3.3 Minimum functionality mode and Flight mode

Minimum functionality mode ceasesa majority functionof the module, thus minimizing the power consumption. This mode is set by the AT command which provides a choice of the functionality levels.

- AT+CFUN=0: Minimum functionality
- AT+CFUN=1: Full functionality (Default)
- AT+CFUN=4: Flight mode

If SIM7080G has been set to minimum functionality mode, the RF function and SIM card function will be closed. In this case, the serial port and USB are still accessible, but RF function andSIM card will be unavailable.

If SIM7080G has been set to flight mode, the RF function will be closed. In this case, the serial port and USB are still accessible, but RF function will be unavailable.

When SIM7080G is in minimum functionality or flight mode, it can return to full functionality by the AT command "AT+CFUN=1".

5.3.4 Power Saving Mode (PSM)

SIM7080G module can enter into PSM for reducing its power consumption. The mode is similar to power-off, but the module remains registered on the network and there is no need to re-attach or re-establish the network connections. So in PSM all the functions will be unavailableexcept the RTC function, module cannot immediately respond users' requests.

When the module wants to use the PSM,it can be enabled via "AT+CPSMS=1" command. The command takes effect after module reboot. If the network supports PSM and accepts that the module uses PSM, the networkconfirms usage of PSM by allocating an Active Time value to the module. Module will be into PSM according to the command from network.

Either of the following methods will wake up the module from PSM:

- Pulling PWRKEY pin to low level will wake up the module.
- When the timer expires, the module will be automatically woken up.

5.3.5 Extended Mode DRX (e-DRX)

In idle or sleep mode, module and the network may negotiate over non-access stratum signaling the use of extended mode DRX for reducing power consumption.

E-DRX diagrammatic sketch refer to the following figure.

Figure 32: e-DRX diagrammatic sketch

When module and the networknegotiatestratum signaling in idle mode or sleep mode, extended mode DRX can decrease the times of paging time window (PTW) and increase the cycle length. For this reason it had reduced the times of DRX, and had reduced the frequency of DRX between module and the network. So that can reduce power consumption for module.

If e-DRX is supported by the network, then it can be enabled by "AT+CEDRXS" command.

Note: For details about "AT+CEDRXS", please refer to Document [1].

5.4 Current Consumption

The current consumption is listed in the table below.

Table 31: Current consumption on VBAT Pins (VBAT=3.8V)

GNSS	
GNSS supply current (AT+CFUN=0,without USB connection)	Tracking, typical: 52mA
Sleep/idle mode	
LTE supply current (GNSS off，without USB connection)	Sleep modeTypical: 1.2mA Idle mode Typical: 14mA
Power SavingMode	
PSM supply current	PSM mode Typical: 3uA
e-DRX	
e-DRXmode supply current （Tested in sleep mode）	@PTW=40.96s；eDRX=81.92s；DRX=2.56s, Typical：1.4mA
	@PTW=25.6s；eDRX=163.84s；DRX=2.56s, Typical：0.59mA
LTE Cat-M1 Voice Call	
TBD	TBD
TBD	TBD

LTE Cat-M1 Data Transmission (10MHz)	LTE-FDD B1	@21dbm Typical: 116mA @11dbm Typical: 103mA @0dbm Typical: 91mA
	LTE-FDD B2	@21dbmTypical: 114mA @10dbm Typical: 103mA @0dbm Typical: 91mA
	LTE-FDD B3	@21dbmTypical: 113mA @10dbm Typical: 103mA @0dbm Typical: 91mA
	LTE-FDD B4	@21dbmTypical: 113mA @10dbm Typical: 103mA @0dbm Typical: 91mA
	LTE-FDD B5	@21dbmTypical: 121mA @10dbm Typical: 101mA @0dbm Typical: 91mA
	LTE-FDD B8	@21dbmTypical: 120mA @10dbm Typical: 103mA @0dbm Typical: 92mA
	LTE-FDD B12	@21dbmTypical: 115mA @10dbm Typical: 101mA @0dbm Typical: 91mA
	LTE-FDD B13	@21dbmTypical: 120mA @10dbm Typical: 103mA @0dbm Typical: 94mA
	LTE-FDD B14	@20dbmTypical: 121mA @10dbm Typical: 103mA @0dbm Typical: 91mA
	LTE-FDD B18	@21dbmTypical: 121mA @10dbm Typical: 101mA @0dbm Typical: 91mA
	LTE-FDD B19	@21dbmTypical: 121mA @10dbm Typical: 102mA @0dbm Typical: 91mA
	LTE-FDD B20	@21dbmTypical: 121mA @10dbm Typical: 103mA @0dbm Typical: 92mA
	LTE-FDD B25	@21dbmTypical: 114mA @10dbm Typical: 103mA @0dbm Typical: 91mA
	LTE-FDD B26	@21dbmTypical: 120mA @10dbm Typical: 103mA @0dbm Typical: 91mA
	LTE-FDD B27	@21dbmTypical: 119mA @10dbm Typical: 102mA @0dbm Typical: 91mA
	LTE-FDD B28	@21dbmTypical: 117mA @10dbm Typical: 102mA @0dbm Typical: 92mA
	LTE-FDD B66	@20dbmTypical: 162mA @10dbm Typical: 130mA @0dbm Typical: 100mA

LTE Cat-NB1/NB2 Data Transmission (15KHz single tone)	LTE-FDD B1	@21dbm Typical: 129mA @10dbm Typical: 87mA @0dbm Typical: 55mA
	LTE-FDD B2	@21dbmTypical: 123mA @10dbm Typical: 86mA @0dbm Typical: 54mA
	LTE-FDD B3	@21dbmTypical: 121mA @10dbm Typical: 85mA @0dbm Typical: 54mA
	LTE-FDD B4	@21dbmTypical: 121mA @10dbm Typical: 85mA @0dbm Typical: 53mA
	LTE-FDD B5	@21dbmTypical: 147mA @10dbm Typical: 83mA @0dbm Typical: 54mA
	LTE-FDD B8	@21dbmTypical: 147mA @10dbm Typical: 84mA @0dbm Typical: 54mA
	LTE-FDD B12	@21dbmTypical: 127mA @10dbm Typical: 78mA @0dbm Typical: 53mA
	LTE-FDD B13	@21dbmTypical: 142mA @10dbm Typical: 82mA @0dbm Typical: 54mA
	LTE-FDD B18	@21dbmTypical: 144mA @10dbm Typical: 83mA @0dbm Typical: 54mA
	LTE-FDD B19	@21dbmTypical: 145mA @10dbm Typical: 83mA @0dbm Typical: 54mA
	LTE-FDD B20	@21dbmTypical: 146mA @10dbm Typical: 83mA @0dbm Typical: 54mA
	LTE-FDD B25	@21dbmTypical: 125mA @10dbm Typical: 85mA @0dbm Typical: 54mA
	LTE-FDD B26	@21dbmTypical: 142mA @10dbm Typical: 80mA @0dbm Typical: 54mA
	LTE-FDD B28	@21dbmTypical: 132mA @10dbm Typical: 83mA @0dbm Typical: 54mA
	LTE-FDD B66	@21dbmTypical: 122mA @10dbm Typical: 85mA @0dbm Typical: 54mA
	LTE-FDD B71	@21dbmTypical: 123 mA @10dbm Typical: 74 mA @0dbm Typical: 52 mA

5.5 ESD Notes

SIM7080G is sensitive to ESD in the process of storage, transporting, and assembling. When SIM7080G is mounted on the users' mother board, the ESD components should be placed beside the connectors which human body may touch, such as SIM card holder, audio jacks, switches, keys, etc. The following table shows SIM7080G ESD measurement performance without any external ESD component.

Table 32: The ESD performance measurement table (Temperature: 25℃, Humidity: 45%.)

Part	Contact discharge	Air discharge
VBAT,GND	+/-6K	+/-12K
Antenna port	+/-5K	+/-10K
Other PADs	+/-1K	+/-3K

6 SMT Production Guide

6.1 Top and Bottom View of SIM7080G

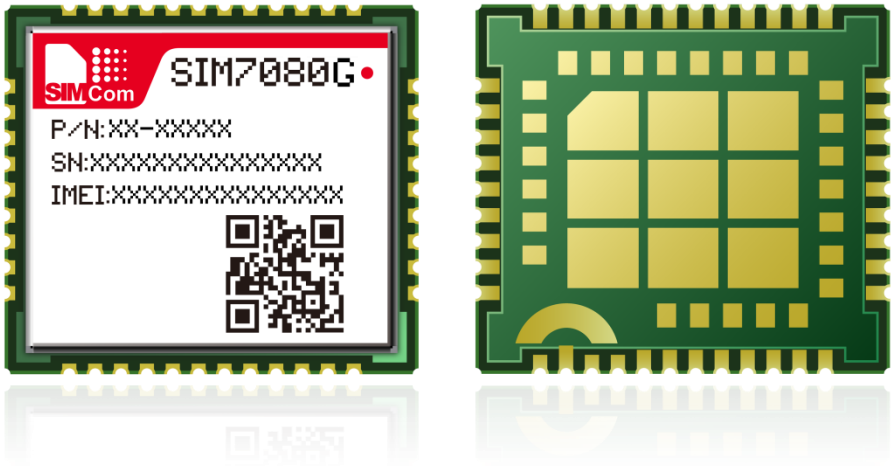

Figure 33: Top and bottom view of SIM7080G

6.2 Label Information

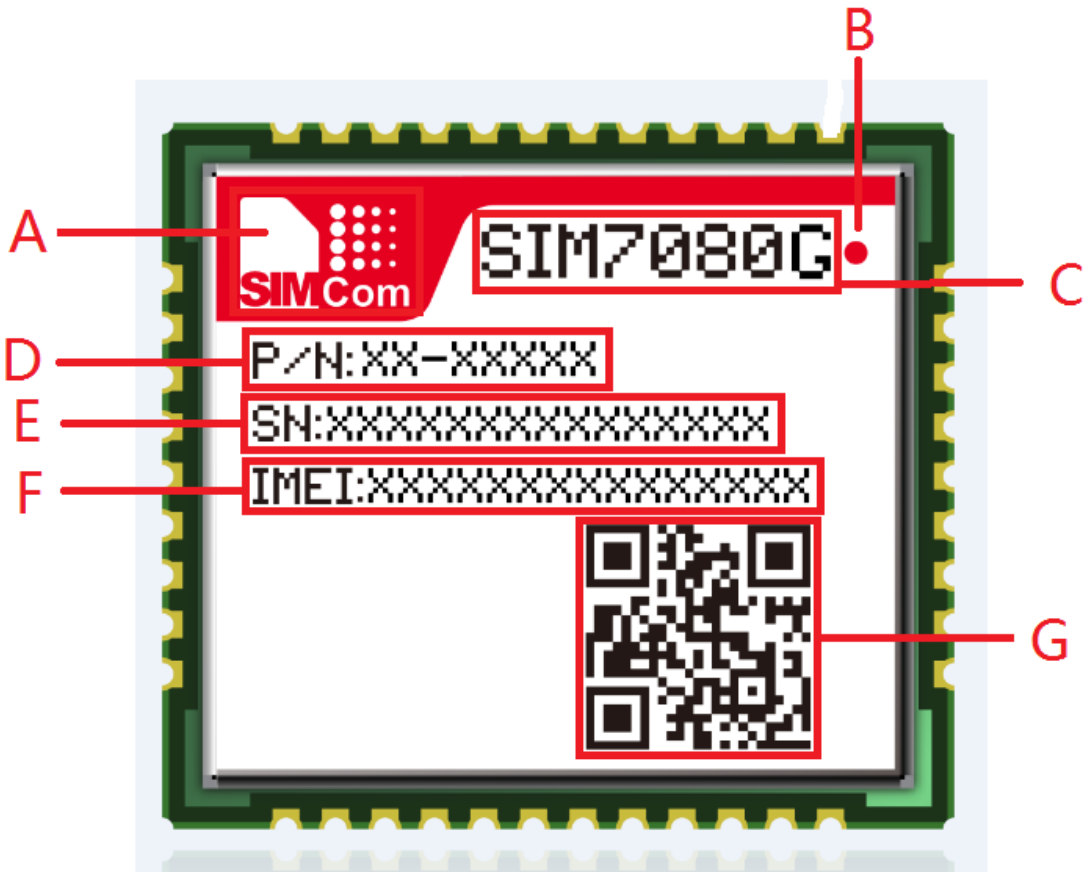

Figure 34: Label information

Table 33: The description of label information

No.	Description
A	LOGO
B	No.1 Pin
C	Project name
D	Product code
E	Serial number
F	International mobile equipment identity
G	QR code

6.3 Typical SMT Reflow Profile

SIMCom provides a typical soldering profile. Therefore the soldering profile shown below is only a generic recommendation and should be adjusted to the specific application and manufacturing constraints.

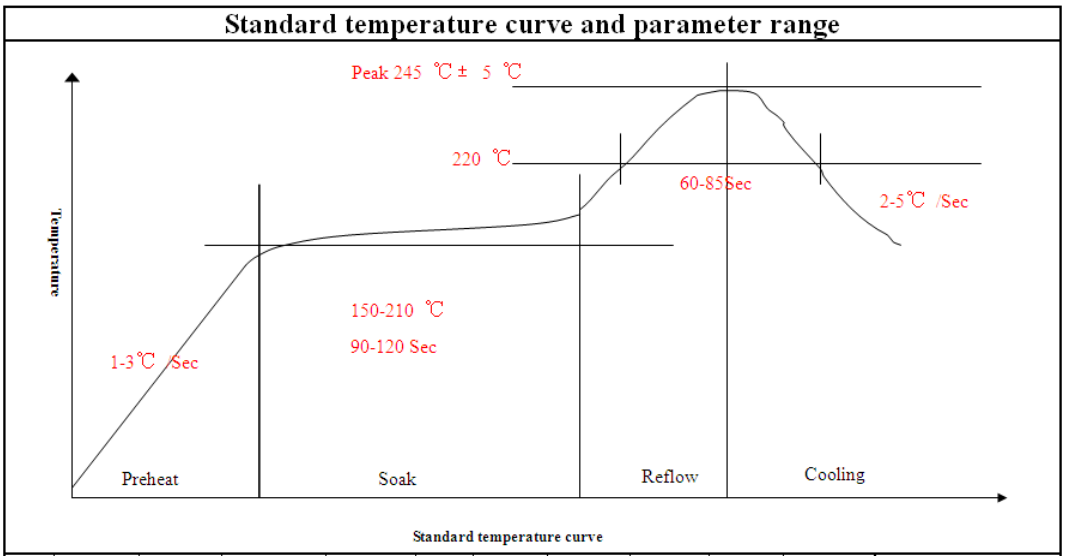

Figure 35: The ramp-soak-spike reflow profile of SIM7080G

Note: For more details about secondary SMT, please refer to the document [19].

6.4 Moisture Sensitivity Level (MSL)

SIM7080G is qualified to Moisture Sensitivity Level (MSL) 3 in accordance with JEDEC J-STD-033.

The following table shows thefeatures of Moisture Sensitivity Level (MSL). After seal off, storage conditions must meet the following table. If the storage time was expired, module must be baking before SMT.

Table 34: Moisture Sensitivity Level and Floor Life

Moisture Sensitivity Level (MSL)	Floor Life (out of bag) at factory ambient≤30°C/60% RH or as stated
1	Unlimited at ≦30℃/85% RH
2	1 yearat ≦30℃/60% RH
2a	4 weeks at ≦30℃/60% RH
3	168 hours at ≦30℃/60% RH
4	72 hours at ≦30℃/60% RH
5	48 hours at ≦30℃/60% RH
5a	24 hours at ≦30℃/60% RH
6	Mandatory bake before use. After bake, it must be reflowed within the time limit specified on the label.

6.5 Baking

In order to get better yield, the module need to bake before SMT.

- If the packaging is in perfect condition, the module which dateofproduction is within six months has no use for baking. If the dateofproduction is more thansix months, the module must be baking.
- If the packaging had been opened or damaged, the module must be baking.

Table 35: Baking conditions

conditions	parameters
Baking temperature	120℃
Baking time	8 hours

NOTE: IPC / JEDEC J-STD-033standard must be followed for production and storage.

6.6 Stencil Foil Design Recommendation

The recommended thickness of stencil foil is 0.15mm.

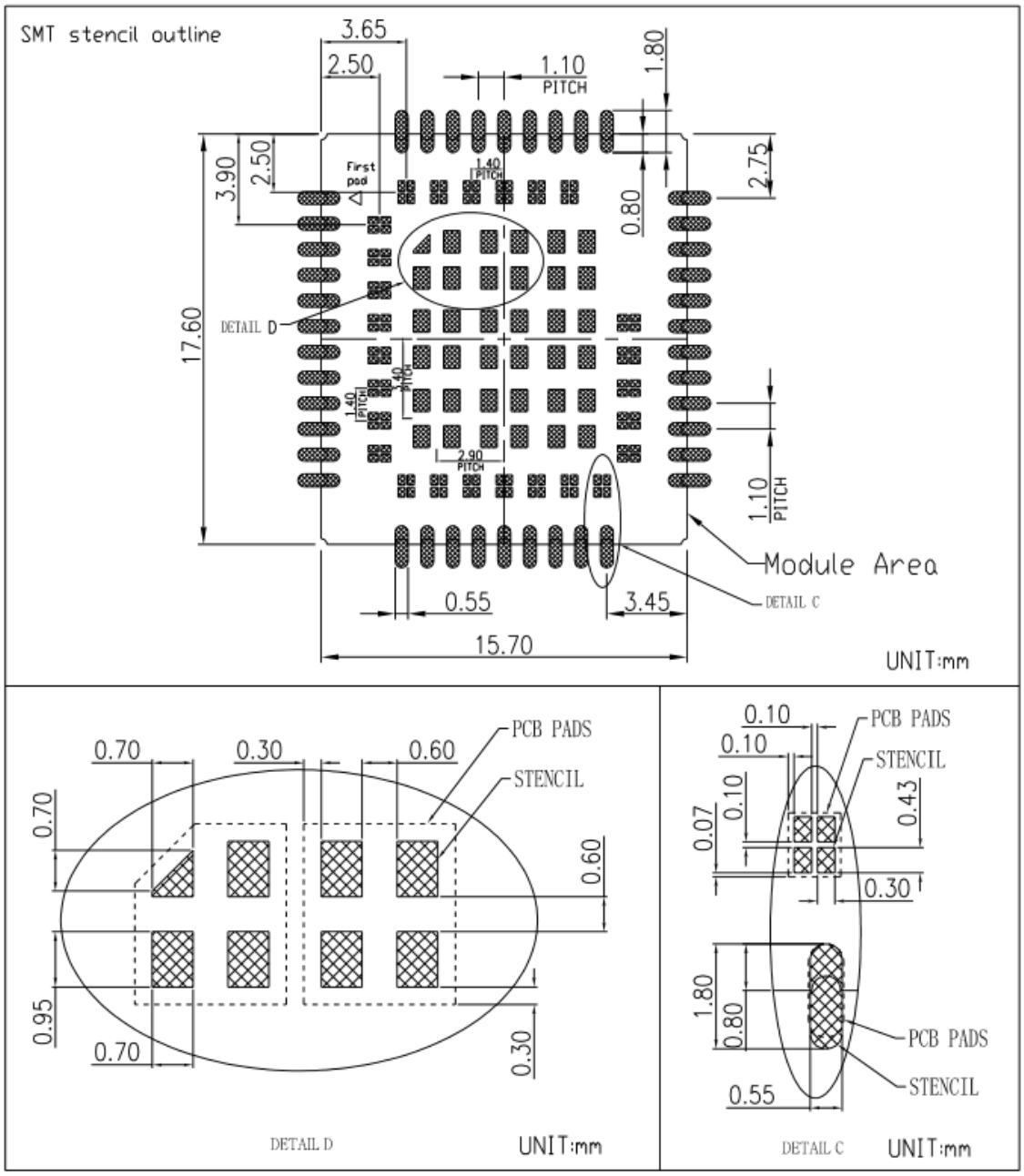

Figure 36: stencilrecommendation (Unit: mm)

7 Packaging

7.1 Tray packaging

SIM7080G module support tray packaging.

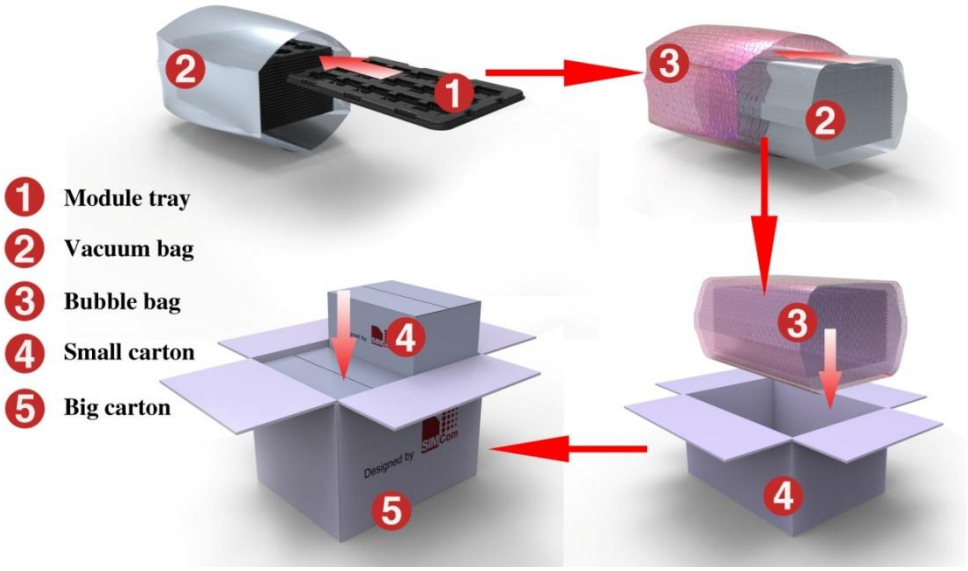

Figure 37: packaging diagram

Module tray drawing：

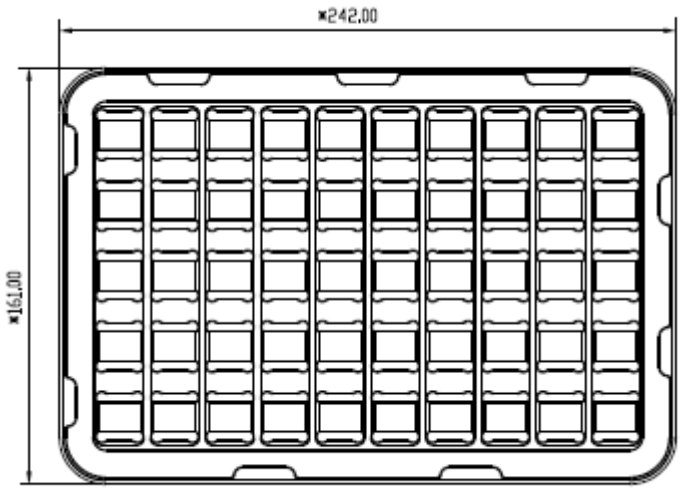

Figure 38: Tray drawing

Table 36: Tray size

Length（±3mm）	Width（±3mm）	Module number
242.0	161.0	50

Small carton drawing：

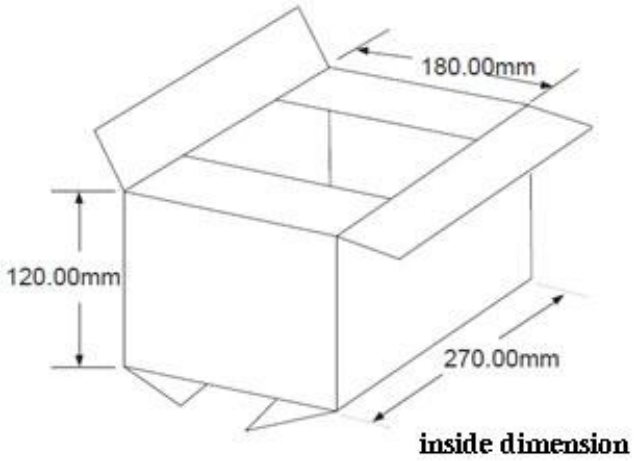

Figure 39: Small carton drawing

Table 37: Small Carton size

Length（±10mm）	Width（±10mm）	Height（±10mm）	Module number
270	180	120	50*20=1000

Big carton drawing：

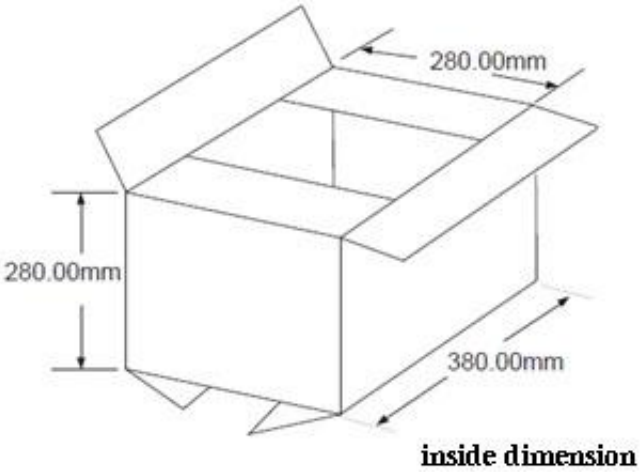

Figure 40: Big carton drawing

Table 38: Big Carton size

Length（±10mm）	Width（±10mm）	Height（±10mm）	Module number
380	280	280	1000*4=4000

Appendix

A. Reference Design

Refer to <SIM7080G Reference Design V1.01> for the details.

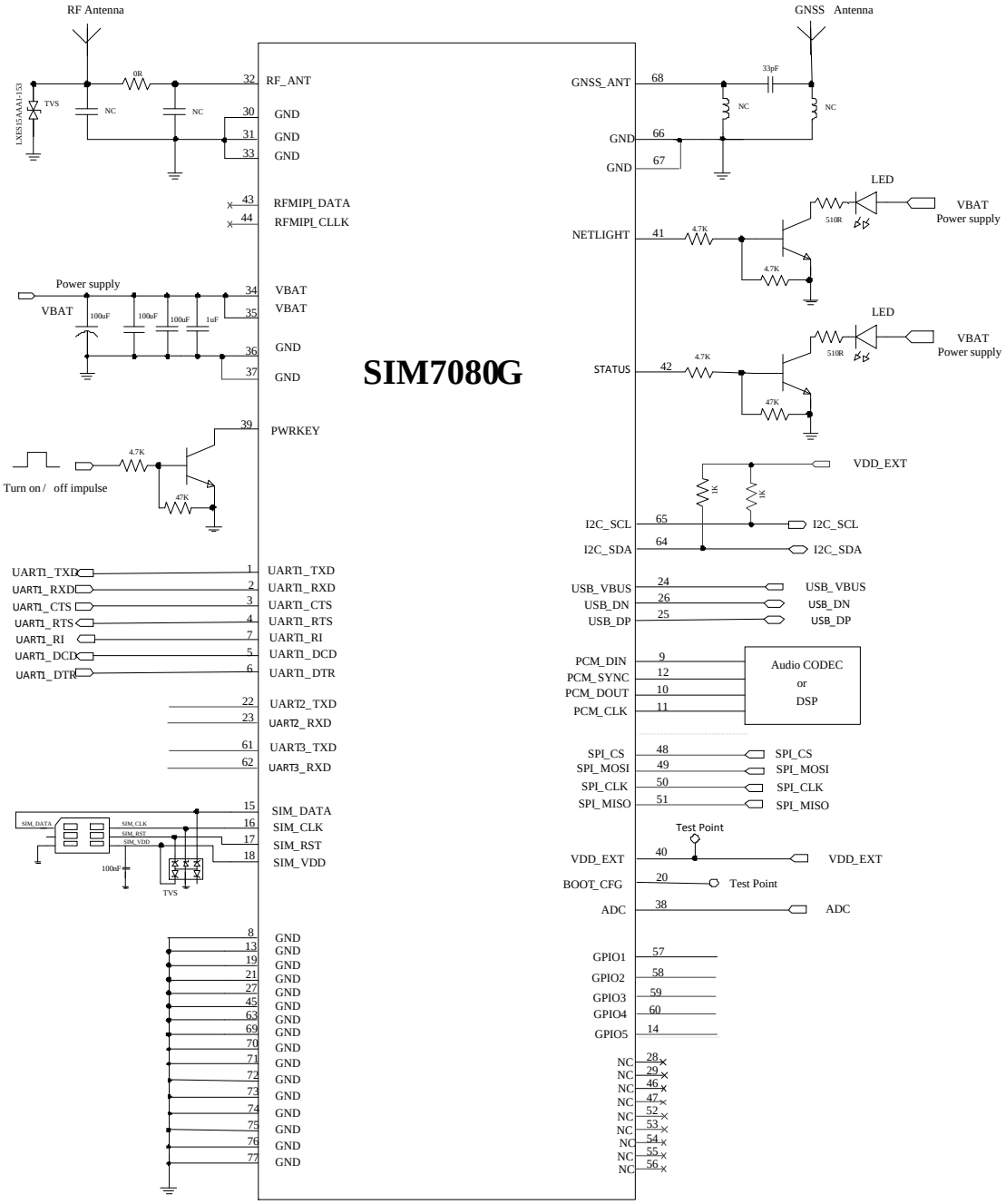

Figure 41: Reference design

B. Design check list

Table 39: Schematic Check List

NO.	Items
1	Insure the supply voltage for VBAT is withintherangeof 2.7V~4.8V.
2	Insure the maximum supply current for VBAT is above its consumption when it is maximum power emission.
3	Insure the capacitor for VBAT is meet its request, in order to avoid the voltage drop exceed 200mV. And the voltage never dropped below 2.7V.
4	Insure the input signal for PWRKEY pin meet its electrical level match. It recommended use BJT to shift its level.
5	Insure the netconnections of UART be correctnessaccording tosignal direction. Insure the signal for UART pins meet its electrical level match. It recommended use BJT or level shift IC to shift its level.
6	Insure USB port had used TVS to protect signal. And the junction capacity of TVS for DP/DM must be less than 3pf.
7	Insure SIM card signal had used TVS to protect. And the junction capacity of TVS must be less than 50pf.
8	The power supply of the active antenna should be controlled and closed.
9	Insure I2C signal had used resistors 1Kohm pull up to VDD_EXT if used.
10	The electrical level of all GPIOs is 1.8V. Insure the signal for GPIO pins meet its electrical level match.
11	The input range of ADC is 0V~1.875V. Insure the input signal never exceed its range.
12	User must pull up DTR when module enters into sleep mode. Insure DTR can be controlled by host.
13	Suggesting to reserve test ports for VDD_EXT and BOOT_CFG. BOOT_CFG should keep open before boot up.
14	LTE main ANT should Keep TVS to prevent ESD destroyed. And the TVS should be Low junction capacitance.
15	LTE main ANT should have a PI type matching to debug antenna

Table 40: PCB LayoutCheck List

NO.	Items
1	Insure the capacitor placement for VBAT be near module pin.
2	Insure VBAT trace width be greater than 2mm. If NB only, insure VBAT trace width be greater than 1mm. And the VIA number must be enough for getting through the current.
3	Insure the return path GND of the power supply is good. Insure the connectivity between module GND and mother board GND is good.
4	Insure PCM trance is protected by GND, and keep it far from interference source, such as power supply trace, USB trace, RF trace and so on.
5	Insure USB trance is protected by GND, and keep it far from interference source, such as power supply trace, RF trace and so on. Insure DM/DP trace is differential routing, and differential impedance is 90 ohm.
6	Insure ADC trance is protected by GND.
7	Insure SIM card signal trance is protected by GND. Especially SIM_CLK must be protected alone. And avoid signal trace branched Routing.

8	Insure TVS avoid bypass. The trace must go through TVS pad first, and then arrived module pad.
9	There should be enough ground around the RF line. RF linesRouting prohibit right angles and sharp angles,trying to trace circular or obtuse angle line.
10	The RF line reference GND should be complete. And avoid high speed lines crossing below it.
11	the GND side of the RF output pinshould be non hot welding disk
12	The routing which is RF output PIN to antenna should be isolated from other high-speed lines. And the routingshould be 50Ω impedance control.

C. Coding Schemes and Maximum Net Data Rates over Air Interface

Table 41: Coding Schemes and Maximum Net Data Rates over Air Interface

LTE-FDD device category (Downlink)	Max data rate（peak）	Modulation type
Category M1	TBD Mbps	QPSK/16QAM
Category NB2	TBD kbps	BPSK/QPSK
LTE-FDD device category (Uplink)	**Max data rate（peak）**	**Modulation type**
Category M1	TBD Mbps	QPSK/16QAM
Category NB2	TBD kbps	BPSK/QPSK

D. Related Documents

Table 42: Related Documents

NO.	Title	Description
[1]	SIM7080GAT Command ManualV1.xx	AT Command Manual
[2]	3GPP TS 51.010-1	Digital cellular telecommunications system (Release 5); Mobile Station (MS) conformance specification
[3]	3GPP TS 34.124	Electromagnetic Compatibility (EMC) for mobile terminals and ancillary equipment.
[4]	3GPP TS 34.121	Electromagnetic Compatibility (EMC) for mobile terminals and ancillary equipment.
[5]	3GPP TS 34.123-1	Technical Specification Group Radio Access Network; Terminal conformance specification; Radio transmission and reception (FDD)
[6]	3GPP TS 34.123-3	User Equipment (UE) conformance specification; Part 3: Abstract Test Suites.
[7]	EN 301 908-02 V2.2.1	Electromagnetic compatibility and Radio spectrum Matters (ERM); Base Stations (BS) and User Equipment (UE) for IMT-2000. Third Generation cellular networks; Part 2: Harmonized EN for IMT-2000, CDMA Direct Spread (UTRA FDD) (UE) covering essential requirements of article 3.2 of the R&TTE Directive
[8]	EN 301 489-24 V1.2.1	Electromagnetic compatibility and Radio Spectrum Matters (ERM); Electromagnetic Compatibility (EMC) standard for radio equipment and services; Part 24: Specific conditions for IMT-2000 CDMA Direct Spread (UTRA) for Mobile and portable (UE) radio and ancillary equipment
[9]	IEC/EN60950-1(2001)	Safety of information technology equipment (2000)
[10]	3GPP TS 51.010-1	Digital cellular telecommunications system (Release 5); Mobile Station (MS) conformance specification
[11]	2002/95/EC	Directive of the European Parliament and of the Council of 27 January 2003 on the restriction of the use of certain hazardous substances in electrical and electronic equipment (RoHS)
[12]	Module secondary-SMT-UGDV1.xx	Module secondary SMT Guidelines
[13]	SIM7080G UARTApplication Note_V1.xx	This document describes how to use UART interface of SIMCom modules.
[14]	ETSI EN 301 908-13 (ETSI TS 136521-1 R13.4.0)	IMT cellular networks; Harmonized EN covering the essential requirements of article 3.2 of the R&TTE Directive; Part 13
[15]	ANTENNA DESIGN GUIDELINES FOR MULTI-ANTENNA SYSTEM V1 01	Design notice for multi-antenna.

E. Terms and Abbreviations

Table 43: Terms and Abbreviations

Abbreviation	Description
ADC	Analog-to-Digital Converter
ARP	Antenna Reference Point
BER	Bit Error Rate
BD	BeiDou
BTS	Base Transceiver Station
CS	Coding Scheme
CSD	Circuit Switched Data
CTS	Clear to Send
DAC	Digital-to-Analog Converter
DRX	Discontinuous Reception
DSP	Digital Signal Processor
DTE	Data Terminal Equipment (typically computer, terminal, printer)
DTR	Data Terminal Ready
DTX	Discontinuous Transmission
DAM	Downloadable Application Module
DPO	Dynamic Power Optimization
DRX	Discontinuous Reception
e-DRX	Extended Discontinuous Reception
EFR	Enhanced Full Rate
EGSM	Enhanced GSM
EMC	Electromagnetic Compatibility
ESD	Electrostatic Discharge
ETS	European Telecommunication Standard
EVDO	Evolution Data Only
FCC	Federal Communications Commission (U.S.)
FD	SIM fix dialing phonebook
FDMA	Frequency Division Multiple Access
FR	Full Rate
GMSK	Gaussian Minimum Shift Keying
GNSS	Global Navigation Satellite System
GPRS	General Packet Radio Service
GPS	Global Positioning System
GSM	Global Standard for Mobile Communications
HR	Half Rate
HSPA	High Speed Packet Access
I2C	Inter-Integrated Circuit
IMEI	International Mobile Equipment Identity
LTE	Long Term Evolution
MO	Mobile Originated
MS	Mobile Station (GSM engine), also referred to as TE
MT	Mobile Terminated
NMEA	National Marine Electronics Association
PAP	Password Authentication Protocol
PBCCH	Packet Switched Broadcast Control Channel

PCB	Printed Circuit Board
PCS	Personal Communication System, also referred to as GSM 1900
RF	Radio Frequency
RMS	Root Mean Square (value)
RTC	Real Time Clock
SIM	Subscriber Identification Module
SMS	Short Message Service
SMPS	Switched-mode power supply
TDMA	Time Division Multiple Access
TE	Terminal Equipment, also referred to as DTE
TX	Transmit Direction
UART	Universal Asynchronous Receiver & Transmitter
VSWR	Voltage Standing Wave Ratio
SM	SIM phonebook
NC	Not connect
EDGE	Enhanced data rates for GSM evolution
HSDPA	High Speed Downlink Packet Access
HSUPA	High Speed Uplink Packet Access
ZIF	Zero intermediate frequency
WCDMA	Wideband Code Division Multiple Access
VCTCXO	Voltage control temperature-compensated crystal oscillator
SIM	Universal subscriber identity module
UMTS	Universal mobile telecommunications system
UART	Universal asynchronous receiver transmitter
PSM	Power saving mode
LD	SIM last dialing phonebook (list of numbers most recently dialed)
MC	Mobile Equipment list of unanswered MT calls (missed calls)
ON	SIM (or ME) own numbers (MSISDNs) list
RC	Mobile Equipment list of received calls
SM	SIM phonebook
NC	Not connect

F. Safety Caution

Table 44: Safety Caution

Marks	Requirements
	When in a hospital or other health care facility, observe the restrictions about the use of mobiles. Switch the cellular terminal or mobile off, medical equipment may be sensitive and not operate normally due to RF energy interference.
	Switch off the cellular terminal or mobile before boarding an aircraft. Make sure it is switched off. The operation of wireless appliances in an aircraft is forbidden to prevent interference with communication systems. Forgetting to think much of these instructions may impact the flight safety, or offend local legal action, or both.
	Do not operate the cellular terminal or mobile in the presence of flammable gases or fumes. Switch off the cellular terminal when you are near petrol stations, fuel depots, chemical plants or where blasting operations are in progress. Operation of any electrical equipment in potentially explosive atmospheres can constitute a safety hazard.
	Your cellular terminal or mobile receives and transmits radio frequency energy while switched on. RF interference can occur if it is used close to TV sets, radios, computers or other electric equipment.
	Road safety comes first! Do not use a hand-held cellular terminal or mobile when driving a vehicle, unless it is securely mounted in a holder for hands free operation. Before making a call with a hand-held terminal or mobile, park the vehicle.
	GSM cellular terminals or mobiles operate over radio frequency signals and cellular networks and cannot be guaranteed to connect in all conditions, especially with a mobile fee or an invalid SIM card. While you are in this condition and need emergent help, please remember to use emergency calls. In order to make or receive calls, the cellular terminal or mobile must be switched on and in a service area with adequate cellular signal strength. Some networks do not allow for emergency call if certain network services or phone features are in use (e.g. lock functions, fixed dialing etc.). You may have to deactivate those features before you can make an emergency call. Also, some networks require that a valid SIM card be properly inserted in the cellular terminal or mobile.

Contact us:

Shanghai SIMCom Wireless Solutions Ltd.

Add: SIM Technology Building, No.633, Jinzhong Road, Changning District, Shanghai P.R. China 200335

Tel：+86 21 3157 5100 / +86 21 3157 5200

URL：www.simcom.com

Antenna requirements

1. Antenna List:

Type: vehicle antenna with standard SMA connector(50ohm);
Model: MF25D
Antenna Gain:

NB-IOT B2: 10.85dBi,
NB-IOT B4: 11.31dBi,
NB-IOT B5: 8.28dBi,
NB-IOT B12: 7.57dBi,
NB-IOT B13: 8.46dBi,
NB-IOT B71: 7.77dBi

CAT-M B2/B25: 9.85dBi,
CAT-M B4: 10.85dBi,
CAT-M B12: 6.61dBi,
CAT-M B13: 8.02dBi,
CAT-M B26: 6.29dBi

2. The user must match the MF25D antenna with the non-standard SMA connector and cannot change the antenna.

This device is intended only for OEM integrators under the following conditions: (For module device use)

1) The antenna must be installed such that 20 cm is maintained between the antenna and users, and
2) The transmitter module may not be co-located with any other transmitter or antenna.

As long as 2 conditions above are met, further transmitter test will not be required. However, the OEM integrator is still responsible for testing their end-product for any additional compliance requirements required with this module installed.

Radiation Exposure Statement

This equipment complies with IC radiation exposure limits set forth for an uncontrolled environment. This equipment should be installed and operated with minimum distance 20 cm between the radiator & your body.

Cet appareil est conçu uniquement pour les intégrateurs OEM dans les conditions suivantes: (Pour utilisation de dispositif module)

1) L'antenne doit être installée de telle sorte qu'une distance de 20 cm est respectée entre l'antenne et les utilisateurs, et
2) Le module émetteur peut ne pas être co-implanté avec un autre émetteur ou antenne.

Tant que les 2 conditions ci-dessus sont remplies, des essais supplémentaires sur l'émetteur ne seront pas nécessaires. Toutefois, l'intégrateur OEM est toujours responsable des essais sur son produit final pour toutes exigences de conformité supplémentaires requis pour ce module installé.

Déclaration d'exposition aux radiations:

Cet équipement est conforme aux limites d'exposition aux rayonnements ISED établies pour un environnement non contrôlé. Cet équipement doit être installé et utilisé avec un minimum de 20 cm de distance entre la source de rayonnement et votre corps.

FCC Statement

This device complies with part 15 of the FCC Rules. Operation is subject to the following two conditions:
(1) This device may not cause harmful interference, and
(2) this device must accept any interference received, including interference that may cause undesired operation.

Any Changes or modifications not expressly approved by the party responsible for compliance could void the user's authority to operate the equipment.

The modular can be installed or integrated in mobile or fix devices only. This modular cannot be installed in any portable device.

FCC Radiation Exposure Statement
This modular complies with FCC RF radiation exposure limits set forth for an uncontrolled environment. This transmitter must not be co-located or operating in conjunction with any other antenna or transmitter. This modular must be installed and operated with a minimum distance of 20 cm between the radiator and user body.

If the FCC identification number is not visible when the module is installed inside another device, then the outside of the device into which the module is installed must also display a label referring to the enclosed module. This exterior label can use wording such as the following: “Contains Transmitter Module FCC ID: 2AJYU-8VC0002 Or ContainsFCC ID: 2AJYU-8VC0002”

When the module is installed inside another device, the user manual of the host must contain below warning statements;
1. This device complies with Part 15 of the FCC Rules. Operation is subject to the following two conditions:
(1) This device may not cause harmful interference.
(2) This device must accept any interference received, including interference that may cause undesired operation.
2. Changes or modifications not expressly approved by the party responsible for compliance could void the user's authority to operate the equipment.
The devices must be installed and used in strict accordance with the manufacturer's instructions as described in the user documentation that comes with the product.
Any company of the host device which install this modular with limit modular approval should perform the test of radiated emissionand spurious emission according to FCC Part 22H and 24E, 47 CFR Part 2, 22H, 24(E), 27 and 47 CFR Part 2, 22H, 24(E), 27, 90 requirement,Only if the test result comply with FCC Part 22H and 24E, 47 CFR Part 2, 22H, 24(E), 27 and 47 CFR Part 2, 22H, 24(E), 27, 90 requirement, then the host can be sold legally.

IC Warning

This device complies with Industry Canada licence-exempt RSS standard(s). Operation is subject to the following two conditions:
(1) This device may not cause interference, and
(2) This device must accept any interference, including interference that may cause undesired operation of the device.

The modular can be installed or integrated in mobile or fix devices only. This modular cannot be installed in any portable device.

IC Radiation Exposure Statement
This modular complies with IC RF radiation exposure limits set forth for an uncontrolled environment. This transmitter must not be co-located or operating in conjunction with any other antenna or transmitter. This modular must be installed and operated with a minimum distance of 20 cm between the radiator and user body.

For a host manufacture's using a certified modular, if (1) the module's IC number is not visible when installed in the host, or (2) if the host is marketed so that end users do not have straightforward commonly used methods for access to remove the module so that the IC number of the module is visible; then an additional permanent label referring to the enclosed module: "Contains Transmitter Module IC: " 23761-8VC0002 " or "Contains IC: 23761-8VC0002" must be used.

Le présent appareil est conforme aux CNR d'Industrie Canada applicables aux appareils radio exempts de licence. L'exploitation est autorisée aux deux conditions suivantes:
(1) l'appareil ne doit pas produire de brouillage, et
(2) l'utilisateur de l'appareil doit accepter tout brouillage radioélectrique subi, même si le brouillage est susceptible d'en compromettre le fonctionnement

Le modular peut être installé ou intégré dans un mobile ou réparer une seule chose
Installation dans n'importe quel appareil portable.

Déclaration de rayonnement IC
Ce modular complies avec des radiations émettrices de rayonnement Environnement. Ceci ne doit pas être co-localisé ou opérer avec des autres Ce modular doit être installé et obtenu avec une distance minimale de 20 cm entre les radiateurs et le corps de l'utilisateur.

Pour un hôte, on utilise un modular, si (1) le numéro de module est non visible
Quand on est installé dans le serveur, or (2) si le propriétaire est commercialisé Straightforward commonly used for the access to remove travail so that the number IC en vue Le module est visible;Ensuite, le label permanent a été attribué au module: "Contient le Module IC:" 23761-8VC0002" ou "contenu IC: 23761-8VC0002" doit" be used.