SIM8260G-M2 Series Hardware Design

5G Module

SIMCom Wireless Solutions Limited.
SIMCom Headquarters Building, Building 3, No. 289 Linhong
Changning District, Shanghai P.R.China
Tel: 86-21-31575100
support@SIMcom.com
www.SIMcom.com

Document title:	SIM8260G-M2 Series Hardware Design
Version:	V1.07
Date:	2023-05-31
Status:	Release

GENERAL NOTES

SIMCOM OFFERS THIS INFORMATION AS A SERVICE TO ITS CUSTOMERS TO SUPPORT THE APPLICATION AND ENGINEERING EFFORTS THAT USE THE PRODUCTS DESIGNED BY SIMCOM. THE INFORMATION PROVIDED IS BASED ON THE REQUIREMENTS SPECIFICALLY FROM THE CUSTOMERS. SIMCOM HAS NOT UNDERTAKEN ANY INDEPENDENT SEARCH FOR ADDITIONAL RELEVANT INFORMATION, INCLUDING ANY INFORMATION THAT MAY BE IN THE CUSTOMER'S POSSESSION. FURTHERMORE, THE SYSTEM VALIDATION OF THE PRODUCT DESIGNED BY SIMCOM WITHIN A LARGER ELECTRONIC SYSTEM REMAINS THE RESPONSIBILITY OF THE CUSTOMER OR THE CUSTOMER'S SYSTEM INTEGRATOR. ALL SPECIFICATIONS SUPPLIED HEREIN ARE SUBJECT TO CHANGE WITHOUT NOTICE.

COPYRIGHT

THIS DOCUMENT CONTAINS THE PROPRIETARY TECHNICAL INFORMATION WHICH IS THE PROPERTY OF SIMCOM LIMITED, COPYING OF THIS DOCUMENT, GIVING IT TO OTHERS, THE USING OR COMMUNICATION OF THE CONTENTS THEREOF ARE FORBIDDEN WITHOUT THE OFFICIAL AUTHORITY BY SIMCOM. OFFENDERS ARE LIABLE TO THE PAYMENT OF THE DAMAGES. ALL RIGHTS ARE RESERVED IN THE EVENT OF GRANT OF A PATENT OR THE REGISTRATION OF A UTILITY MODEL OR DESIGN. ALL SPECIFICATIONS SUPPLIED HEREIN ARE SUBJECT TO CHANGE WITHOUT NOTICE.

SIMCom Wireless Solutions Limited
SIMCom Headquarters Building, Building 3, No. 289 Linhong Road, Changning District, Shanghai P.R. China
Tel: +86 21 31575100
Email: SIMcom@SIMcom.com

For more information, please visit:
https://www.SIMcom.com/download/list-863-en.html

For technical support, or to report documentation errors, please visit:
https://www.SIMcom.com/ask/ or email to: support@SIMcom.com

Copyright © 2022 SIMCom Wireless Solutions Limited All Rights Reserved.

Contents

Contents.....3
Table Index.....5
Figure Index.....7
1. Introduction.....8
1.1 Product Outline.....9
1.3 Feature Overview.....11
2.1.2 WLAN ZIF Connector.....14
2.1.3 Test Point of Module.....15
2.2 Pin Description.....17
3. Interface Application.....25
3.1 Power Supply.....25
3.1.1 Power Supply Design Guide.....25
3.1.2 Recommended Power Supply Circuit.....28
3.1.3 Voltage Monitor.....31
3.2 Power On and Off Module.....32
3.2.1 Power On.....32
3.2.2 Power Off.....33
3.3 Reset Function.....35
3.4 I2C Interface.....37
3.5 WoWWAN#*.....38
3.6 USB Interface.....38
3.7 PCIe Interface.....42
3.7.1 PCIe timing.....44
3.7.2 USB and PCIe Modes*.....44
3.7.3 PCIe for W82.....46
3.7.4 PCIe for RTL8125B-TE.....48
3.7.5 PCIe for Qualcomm IPQxxxx*.....49
3.8 (U)SIM Interface.....50
3.8.1 Always Close (U)SIM Card Design.....52
3.8.2 Always Open (U)SIM Card Design.....52
3.8.3 Without CD PIN (U)SIM Card Design.....53
3.9 I2S Interface.....54
3.9.1 I2S Timing.....54
3.9.2 I2S Reference Circuit.....55
3.10 DPR*.....56
3.11 CONFIG Pins.....58
3.12 LED1#.....59
3.13 W_DISABLE1#.....60
3.14 TDD_SYNC_PPS*.....62
3.14.1 W_DISABLE2#*.....63
3.15 Antenna Control Interface*.....65
3.16 UART Interface.....67
3.17 GPIOs Interface.....68
3.18 mmW Interface.....69
4. Antenna Interfaces.....71
4.1.1 3G/4G/5G/mmW Operating Frequency.....73
4.1.2 GNSS Frequency.....76
4.2 Antenna Installation.....77
4.2.1 Antenna Requirements.....77
4.2.2 RF Plug Recommendation.....78
4.2.3 RF Cable Assembly Operation.....80
5. Electrical Specifications.....82

SIMCom Confidential

5.1 Absolute Maximum Ratings..... 82
5.2 Operating Conditions..... 83
5.3 Operating Mode..... 84
5.3.1 Operating Mode Definition..... 84
5.3.2 Sleep Mode..... 84
5.3.3 Minimum Functionality Mode and Flight Mode..... 85
5.4 Current Consumption..... 86
5.5 RF Output Power..... 90
5.6 Conducted Receive Sensitivity..... 91
5.7 Thermal Design..... 93
5.8 ESD..... 95

8. Appendix..... 98
8.1 Coding Schemes and Maximum Net Data Rates over Air Interface..... 98
8.2 Related Documents..... 100
8.3 Terms and Abbreviations..... 100
8.4 Safety Caution..... 103

SIMCom Confidential

Table Index

Table 1 : Module frequency bands....9
Table 2 : Data transmission throughput....10
Table 3 : Key features....11
Table 4 : Pin differences of SIM826XX-M2 and SIM8X80-M2....13
Table 5 : Recommended WLAN ZIF connector list....15
Table 6 : Test point of module description....16
Table 7 : IO parameters definition....17
Table 8 : DC parameters definition....17
Table 9 : Pin description....17
Table 10 : VBAT pins electrical characteristics....25
Table 11 : Definition of VBAT and GND pins....26
Table 12 : Recommended D1 list....27
Table 13 : PIN65 of the module recommend TVS list....28
Table 14 : Recommended FB1 and L1 list....29
Table 15 : Definition of FULL_CARD_POWER_OFF# pin....32
Table 16 : Power on timing and electrical characteristics....32
Table 17 : Power off timing and electrical characteristics....34
Table 18 : Recommended Q1 list....35
Table 19 : Definition of RESET# pin....35
Table 20 : RESET# pin electrical characteristics....36
Table 21 : Definition of I2C interface....37
Table 22 : Definition of WoWWAN# pin....38
Table 23 : Definition of USB interface....40
Table 24 : USB interface recommended CC detector, USB3.1 type-C switch and TVS diode list....41
Table 25 : Definition of PCIe interface....42
Table 26 : PCIe interface recommended TVS diode list....43
Table 27 : Recommended shift level list....46
Table 28 : Recommended RTL8125B IC list....48
Table 29 : (U)SIM electrical characteristics in 1.8V mode ((U)SIM_PWR=1.8V)....50
Table 30 : (U)SIM electrical characteristics in 3.0V mode ((U)SIM_PWR=3.0V)....50
Table 31 : Definition of (U)SIM interface....50
Table 32 : Recommended TVS and always close (U)SIM socket list....51
Table 33 : I2S format....54
Table 34 : I2S timing parameters....54
Table 35 : Definition of I2S interface....55
Table 36 : The PCM interface is multiplexing with I2S interface....56
Table 37 : Definition of DPR# pin....56
Table 38 : CONFIG pins state of the module....58
Table 39 : CONFIG interface definition....58
Table 40 : Definition of LED1# pin....59
Table 41 : LED1# pin status....60
Table 42 : Definition of W_DISABLE1# pin....60
Table 43 : W_DISABLE1# pin status....61
Table 44 : Definition of TDD_SYNC_PPS pin....62
Table 45 : Definition of W_DISABLE2# pin....63
Table 46 : Recommended D1 list....63
Table 47 : W_DISABLE2#* pin status....64
Table 48 : Definition of antenna control interface through GPIOs....65
Table 49 : Definition of UART interface....67
Table 50 : GPIO list....68
Table 51 : mmW Interface....69
Table 52 : Recommended mmW module connector list....70
Table 53 : Antenna port definitions....71
Table 54 : Frequency band and antenna ports mapping....72
Table 55 : Module operating frequency....73
Table 56 : GNSS frequency....76
Table 57 : 3G/4G/5G/GNSS antennas....77
Table 58 : GNSS antenna (for dedicated GNSS antenna only) *....77
Table 59 : Electrical Specifications of 20449-001E-03....78
Table 60 : Absolute maximum ratings....82
Table 61 : VBAT recommended operating ratings....83

SIMCom Confidential

Table 62 : 1.8V Digital I/O characteristics....83
Table 63 : Operating temperature....83
Table 64 : Operating mode definition....84
Table 65 : Module Current consumption on VBAT pins (VBAT=3.8V)....86
Table 66 : Conducted output power....90
Table 67 : Conducted RF receiving sensitivity....91
Table 68 : Chip junction temperature table....94
Table 69 : The ESD performance measurement table (Temperature: 25℃, Humidity: 45%)....95
Table 70 : Label description of the module information....97
Table 74 : Coding schemes and maximum net data rates over air interface....98
Table 75 : Related documents....100
Table 76 : Terms and abbreviations....101
Table 77 : Safety caution....103

SIMCom Confidential

Figure Index

Figure 1 : SIMCom 5G module model illustrate....8
Figure 4 : Pin map of WLAN ZIF connector interface 14
Figure 5 : Test point of SIM826XX/SIM8X80-M2 series module....15
Figure 7 : Maximum current consumption of the module....25
Figure 8 : Power supply reference circuit....26
Figure 9 : Power supply reference circuit....27
Figure 10 : Linear regulator reference circuit....28
Figure 11 : Switching mode power supply reference circuit....29
Figure 12 : Switching mode power supply reference circuit for mmW module (SIM8380G-M2) 29
Figure 13 : Reference power on/off circuit....32
Figure 14 : Power on sequence....32
Figure 15 : Power off sequence....34
Figure 16 : Reference reset circuit....35
Figure 17 : The reset timing sequence of the module....36
Figure 18 : I2C reference circuit....37
Figure 19 : WoWWAN# signal level at SMS and URC report....38
Figure 20 : WoWWAN# reference circuit....38
Figure 21 : USB reference circuit....39
Figure 22 : Type-C USB reference circuit with CC detector....40
Figure 23 : PCIe interface reference circuit (EP Mode)....42
Figure 24 : PCIe power-on sequence requirements of M.2 specification....44
Figure 25 : PCIe power-on sequence requirements of module....44
Figure 26 : The module connect W82 reference circuit (PCIe assistant signal is 3.3V version)....46
Figure 27 : The module connect RTL8125B-TE reference circuit (3.3V PCIe assistant signal version)....48
Figure 28 : The module connect IPQxxxx reference circuit (1.8V PCIe assistant signal version)....49
Figure29 : Always close (U)SIM card reference circuit....52
Figure30 : Always open (U)SIM card reference circuit....52
Figure31 : Without CD pin (U)SIM card reference circuit....53
Figure 32 : I2S timing....54
Figure 33 : Audio codec diagram circuit 55
Figure 34 : LED1# reference circuit....59
Figure 35 : W_DISABLE1# pin reference circuit....60
Figure 36 : TDD_SYNC_PPS pin reference circuit....62
Figure 37 : W_DISABLE2# pin reference circuit....63
Figure 38 : UART level conversion circuit 67
Figure 39 : The connection diagram of module and mmW module....69
Figure 41 : 3D view of 20449-001E-03....78
Figure 42 : 3D view of MXHJD3HJ1000....79
Figure 43 : RF cable correct pull and push operation....80
Figure 44 : RF cable error pull and push operation....80
Figure 45 : Use RF cable tool correct pull and push operation....81
Figure 46 : Use RF cable tool error pull and push operation....81
Figure 47 : Thermal design diagram....93

SIMCom Confidential

1. Introduction

This document describes the electronic specifications, RF specifications, interfaces, mechanical characteristics and test results of the SIM826XX/SIM8X80-M2 module. With the help of this document，customers can quickly understand SIM826XX/SIM8X80-M2 Series module.

Associated with other software application notes and user guides, customers can use SIM826XX/SIM8X80-M2 Series to design and develop mobile and laptop applications easily.

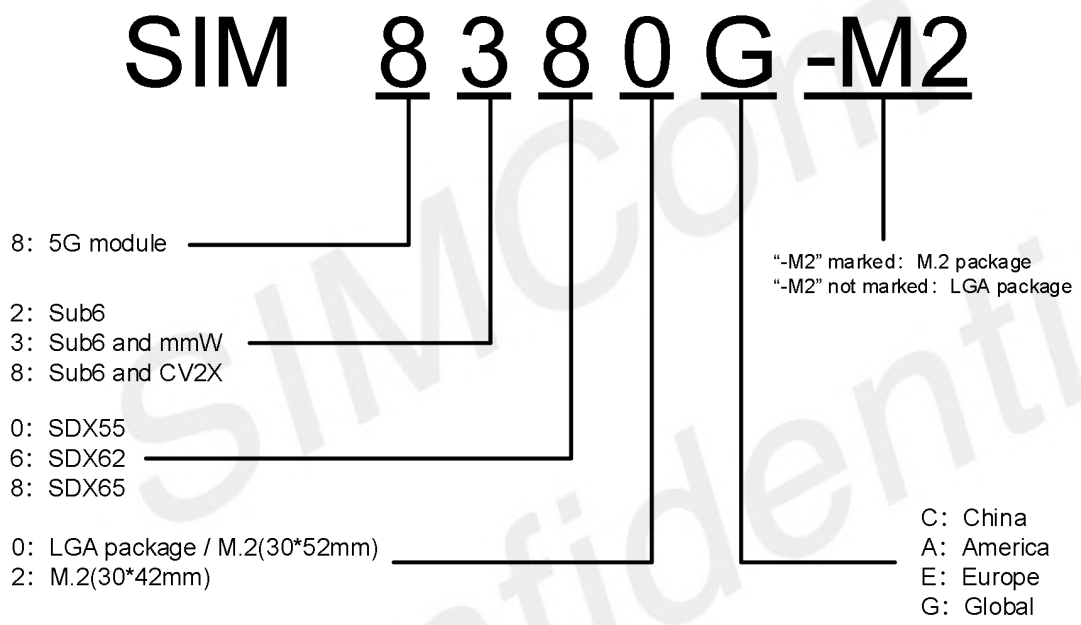

Figure 1: SIMCom 5G module model illustrate

SIMCom Confidential

1.1 Product Outline

SIM826XX/SIM8X80-M2 Series is a wireless communication module focusing on 5G market, it supports multi-air access technology including 5G NR (NSA/SA), LTE-FDD, LTE-TDD, and WCDMA, can meet the 3GPP R16 NR specification, and data rate which up to 4Gps (DL). GNSS system is optional, and it includes dual bands GLONASS/Bei Dou/Galileo/QZSS. Only SIM8380G-M2 support mmW.

The module's supported radio frequency bands are shown in the following table.

Table 1: Module frequency bands

Standard	Frequency bands
SIM8260G-M2	
5G NR	n1/n2/n3/n5/n7/n8/n12/n13/n14/n18/n20/n25/n26/n28/n29/n30/n38/n40/n41/n48/n66/n71/n75/n76/n77/n78/n79
LTE-FDD	B1/B2/B3/B4/B5/B7/B8/B12/B13/B14/B17/B18/B19/B20/B25/B26/B28/B29/B30/B32/B66/B71
LTE-TDD	B34/B38/B39/B40/B41/B42/B43/B46/B48
WCDMA	B1/B2/B4/B5/B8/B19
GNSS1	L1
SIM8380G-M2	
5G NR	n1/n2/n3/n5/n7/n8/n12/n13/n14/n18/n20/n25/n26/n28/n29/n38/n40/n41/n48/n66/n71/n75/n76/n77/n78/n79
5G mm Wave	N257/n258/n260/n261
LTE-FDD	B1/B2/B4/B5/B7/B8/B12/B13/B14/B17/B18/B19/B20/B25/B26/B28/B29/B30/B32/B66/B71
LTE-TDD	B34/B38/B39/B40/B41/B42/B43/B46/B48
WCDMA	B1/B2/B4/B5/B8/B19
GNSS[1]	L1

The physical dimension of SIM8260G/SIM8380G-M2 is 30.0mm*52.0mm*2.3mm , which all can meet PCI Express M.2 specifications, and can meet almost all space requirements in customer's applications.

The module owns rich interfaces, includes USB3.1, PCIe3.0, (U)SIM card, digital audio [3](I2S or PCM), I2C, GPIOs, four antennas for 3G/4G/5G and GNSS. SIM8380-M2 has 4 dedicated antennas for mmW.

With all the interfaces, module can also be utilized in the handheld terminal, machine-to-machine laptop application and especially the notebook.

NOTE

1. GNSS system is optional.
2. L5 is not support by default, if customers need to support L5, hardware needs to be customized, for more detail, please contact SIMCom support teams.

Table 2: Data transmission throughput

Module	Data transmission throughput
SIM8260G-M2	NSA: 3.25Gbps(DL)/460Mbps(UL) SA: 2.5Gbps(DL)/900Mbps(UL) LTE: 1.6Gbps (DL)/200Mbps (UL) HSPA+:42Mbps (DL)/5.76Mbps (UL)
SIM8380G-M2	mmW: 8.76Gbps(DL)/2.69Gbps(UL) NSA : 4.92Gbps(DL)/660Mbps(UL) SA : 6.2Gbps (DL)/900Mbps(UL) LTE: 2Gbps (DL)/200Mbps (UL) HSPA+ : 42Mbps (DL)/5.76Mbps (UL)

SIMCom Confidential

NOTE

1.SIM8262E-M2 has two hardware versions，the one support digital audio interface, and the another one not support digital audio interface，for more details, please contact the SIMCom support team.
2."*"means the DPR2 function can use module support interrupt GPIO configuration.

1.3 Feature Overview

Table 3: Key features

Feature	Implementation
Application processor	Arm Cortex-A7 up to 1.8 GHz
Memory RAM	4Gb 16-bit LPDDR4X at 2.13 GHz
Memory ROM	4Gb 8-bit NAND
Power supply1	VBAT: 3.135～4.4V Typical: 3.8V
Minimum power consumption mode	Typical: 5.3mA (VBAT=3.8V, AT+CFUN=0 & AT+CSCLK=1 & USB no connect)
Transmit power	Power Class 3 for WCDMA/LTE/5G NR Power Class 2 for n41/n77/n78/n79
Modulation system	NR: DL 256QAM, UL 256QAM LTE: DL 256QAM, UL 256QAM WCDMA: 16QAM 64QAM QPSK mmW: 64QAM DL / UL
MIMO	DL 4*4MIMO (LB only support 2*2) UL 2*2MIMO (only support n41) : SIM8262E/A-M2 UL 2*2MIMO (only support n38/n41/n48/n77/n78/n79) : SIM8260G/SIM8380G-M2
Antenna	Four antennas for 3G/4G/5G and GNSS
GNSS (optional)	GNSS engine: GPS /GLONASS/Bei Dou/Galileo/QZSS Protocol: NMEA
SMS	MT, MO, CB, Text and PDU mode SMS storage: (U)SIM card or ME (default) Transmission of SMS alternatively over CS or PS
(U)SIM interface	Support (U)SIM card:1.8V/3.0V Include (U)SIM1 and (U)SIM2 interfaces Support dual (U)SIM single standby[3]
(U)SIM application toolkit	Support SAT class 3 Support USAT
Phonebook management	Support phonebook types: DC, MC, RC, SM, ME, FD, ON, LD, EN

SIMCom Confidential

Digital audio interface	One I2S interface with dedicated main-clock for primary digital audio, the I2S also can be configured as PCM[4] ● MCLK frequency: 12.288MHz (default) ● WCDMA AMR-NB ● VoLTE AMR-WB ● Echo Cancellation ● Noise Suppression
PCIe interface	● One lane PCIe interface, support Gen 3.0 (Gen 1/2 compatible) ● High communication data rate which up to 16Gbps
I2C interface	● Meet I2C specification, version 3.0 ● Data rate up to 400Kbps
USB	Support USB 3.1 Gen2 or USB 2.0 USB3.1: super speed, with data rate which up to 10Gbps USB2.0: high speed interface, support USB operations at low-speed and full-speed, which refer to USB1.0 and USB1.1
UART interface	Module hardware configures as normal communication UART (AT command) by default
Firmware upgrade	Firmware upgrade over USB interface
Physical characteristics	SIM8260C-M2, SIM8380G-M2, SIM8380G-M2 Size:30mm*52mm*2.3mm SIM8262E/A-M2 Size: 30mm*42mm*2.3mm SIM8260C-M2 Weight: 9.34g (typical) SIM8262E-M2 Weight: 7.00g (typical) SIM8262A-M2 Weight: 6.85g (typical) SIM8380G-M2 Weight: 8.37g (typical) SIM8380G-M2 Weight: 8.60g (typical)
Temperature range	Normal operation temperature: -30°C to +70°C (3GPP compliant) Extended operation temperature: -40°C to +85°C[2] Storage temperature: -40°C to +90°C

NOTE

1. The recommended operating voltage of the module is 3.8V. If the voltage is lower than 3.135V, the RF performance will not meet the 3GPP specifications.
2. When Module is within the extended operation temperature range, Module is able to establish and maintain voice, data transmission, SMS and emergency call, etc. The performance may deviate slightly from the 3GPP specifications and will meet 3GPP specifications again when the temperature returns to normal operating temperature levels. It is strongly recommended that customers take heat dissipation measures to ensure that the normal operating temperature of the module can't be exceeded, refer to thermal design section for details.
3. SIM8260G and SIM8380G-M2 module reserve eSIM inside, M2 interface without (U)SIM2 interface.
4. SIM8262E-M2 has two hardware versions，the one support digital audio interface, and the another one not support digital audio interface，for more details, please contact the SIMCom support team.

The pin differences of SIM826XX-M2 and SIM8X80-M2 module below.

Table 4: Pin differences of SIM826XX-M2 and SIM8X80-M2

module name / M.2 pin number	SIM8260G-M2	SIM8380-M2
48	VDD_1V9	VDD_1V9
46	NC	QTM2_PON
44	NC	QTM3_PON
42	NC	QTM1_PON
40	NC	QTM0_PON
28	I2S_WA	I2S_WA
24	I2S_TX	I2S_TX
22	I2S_RX	I2S_RX
59	LAA/N79_TX_EN	LAA/N79_TX_EN
60	I2S_MCLK (LAA_TX_EN[5])	I2S_MCLK
61	ANTCTL1	QTM_THERM_DET
63	ANTCTL0	ANTCTL0
67	RESET#	RESET#
68	I2C_SDA	I2C_SDA
38	I2C_SCL	I2C_SCL

NOTE

1. SIM8262E-M2 has two hardware versions, the one support digital audio interface, and the another one not support digital audio interface, for more details, please contact the SIMCom support team.
2. About mmW function, SIM8380G-M2 only supports two group of QTMs signal; use QTM0_PON and QTM3_PON by default.
3. When the module work N79 or LAA band, PIN63 of SIM8262E-M2, SIM8260C-M2 and PIN59 of SIM8380G-M2, SIM8380G-M2 is output signal, from 5G modules output to WIFI module, the goal is turning off WIFI module RF reception to protect WIFI module.
4. When the WIFI module is working, PIN63 of the SIM8262A-M2 is input signal, from WIFI module output to 5G modules, the goal is turning off 5G module RF LAA LNA to protect 5G module.
5. PIN60 of SIM8380G-M2 (IPQxxxx version) as to module LAA band DL receive protects control.

SIMCom Confidential

2.1.2 WLAN ZIF Connector

SIM826XX/SIM8X80-M2 Series provide a WLAN ZIF connector for WIFI function, the connector is located bottom side of the module and it no assembly on the module by default. About this connector and WIFI function more details, please contact SIMCom support teams, the following figure is pin map of the WLAN ZIF connector.

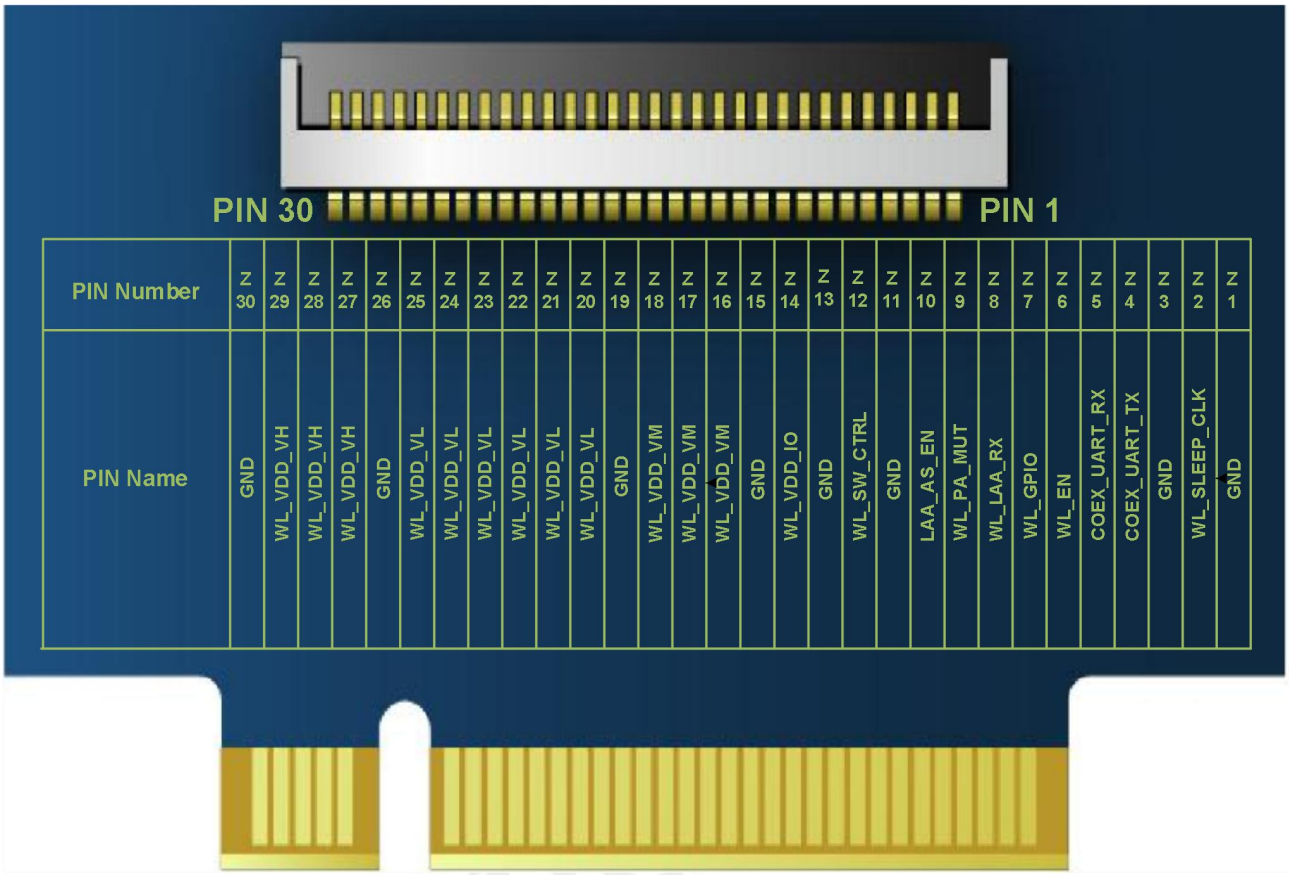

Figure 4: Pin map of WLAN ZIF connector interface

NOTE

1. Connector is no assembly on the module by default.
2. The module not supports the function of WIFI by default.
3. The WALN ZIF connector of SIM826XX_SIM8X80 M2 series module default WIFI module model is W82, other WIFI module models is not supported. If customers need other modules support, please contact the SIMCom support team.

Table 5: Recommended WLAN ZIF connector list

Name	Manufacturer	Part number	Position number
Connector	ACES ELECTONICS	51614-03001-002	/

2.1.3 Test Point of Module

The following figure shows test point of SIM826XX/SIM8X80-M2 series module.

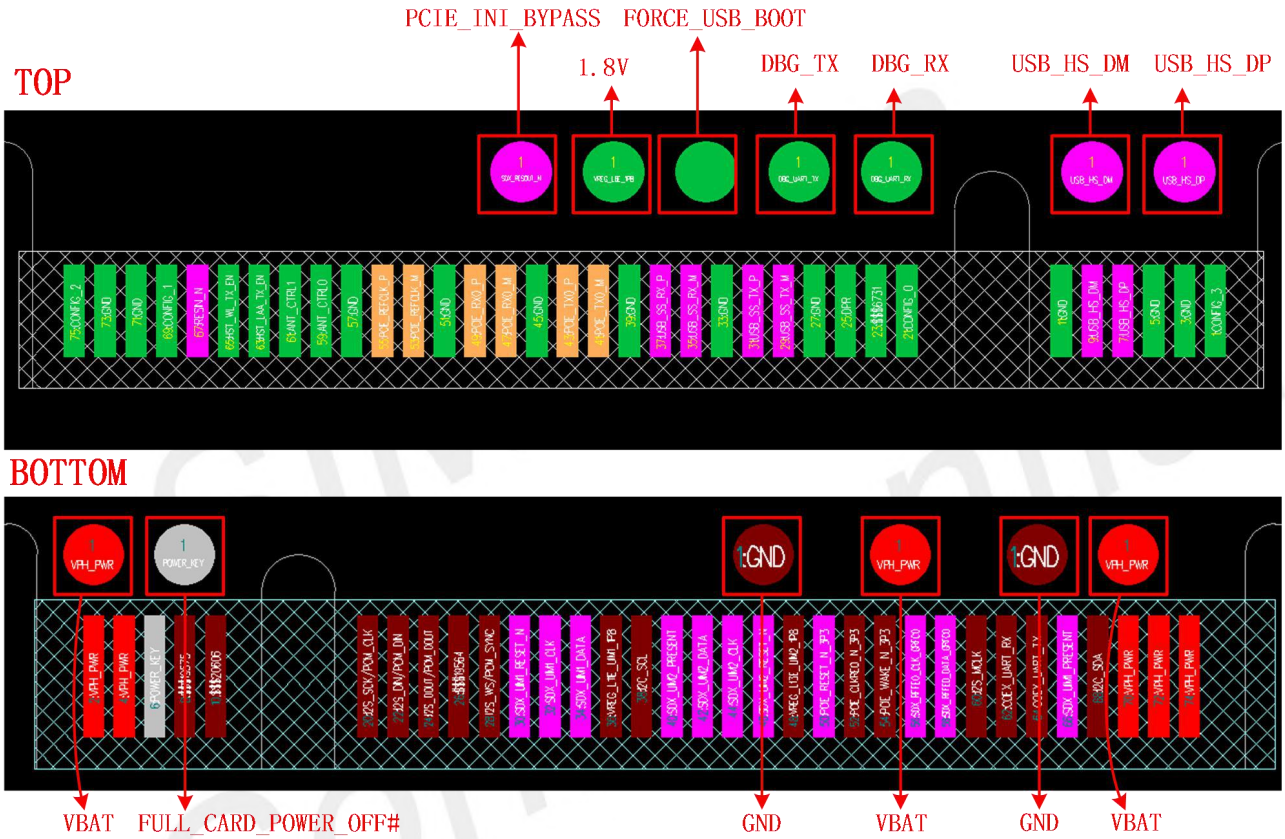

Figure 5: Test point of SIM826XX/SIM8X80-M2 series module

Table 6: Test point of module description

Test Point	Description
PICE_INI_BYPASS	For the windows version module, before powering on module short PCIE_INI_BYPASS and 1.8V, and then power on module, used to bypass PCIe initial in BIOS stage.
1.8V	Module internal power VDD_EXT output.
FORCE_USB_BOOT	Short FORCE_USB_BOOT and 1.8V before powering on module, and then power on module, used to enter to force download mode. If the windows version modules need to enter force download mode, need to short PCIE_INI_BYPASS, FORCE_USB_BOOT and 1.8V at the same time, and then power on module, used to enter to force download mode.
DBUG_TX	Debug UART TX
DBUG_RX	Debug UART RX
USB_HS_DM	USB2.0 DM
USB_HS_DP	USB2.0 DP
FULL_CARD_POWER_OFF#	Power on signal of module
VBAT	Power supply of module
GND	GND

SIMCom Confidential

2.2 Pin Description

Table 7: IO parameters definition

Pin type	Description
PI	Power Input
PO	Power Output
AI	Analog Input
AIO	Analog Input/Output
DIO	Digital Input /Output
DI	Digital Input
DO	Digital Output
DOH	Digital Output with High level
DOL	Digital Output with Low level
PU	Pull Up
PD	Pull Down
OD	Open Drain
OC	Open Collector

Table 8: DC parameters definition

Voltage domain	Parameter		Min	Type	Max
P3	VDD_P3=1.8V				
	V_{OH}	High level output	1.35V	-	1.8V
	V_{OL}	Low level output	0V	-	0.45V
	V_{IH}	High level input	1.26V	1.8V	2.1V
	V_{IL}	Low level input	0V	-	0.54V
	Rp	Pull up/down resistor	20K ohm	-	60K ohm
P4/P5	VDD_P4/P5=1.8V				
	V_{OH}	High level output	1.44V	-	1.8V
	V_{OL}	Low level output	0V	-	0.4V
	V_{IH}	High level input	1.26V	-	1.95V
	V_{IL}	Low level input	0V	-	0.36V
	Rp	Pull up/down resistor	10K ohm	-	100K ohm
	VDD_P4/P5=3.0V				
	V_{OH}	High level output	2.4V	-	3.0V
	V_{OL}	Low level output	0V	-	0.4V
	V_{IH}	High level input	2.1V	-	3.05V
	V_{IL}	Low level input	0V	-	0.6V
	Rp	Pull up/down	10K ohm		100K ohm

Table 9: Pin description

Pin name	Pin	Electrical	Description	Comment

SIMCom Confidential

	no.	description			
Power supply					
VBAT	2,4,70, 72,74		PI	Power supply Range：3.135～4.4V Typical：3.8V	These pins should be connected together to withstand sufficent current
VIO_1V8	65		PO	1.8V output voltage	If need to use VIO_1V8, need to string 2.2R resister outside the module , and at the same time add TVS protect diode
GND	3,5,11,27, 33,39,45,51,5 7,71,73			Ground	
System control					
FULL_CARD_POW ER_OFF#	6		DI, PD	High level: the module power on Low level: the module power off	It's 3.3V tolerant but can be driven by either 1.8V or 3.3V GPIO
RESET#	67	P3	DI	System reset control input Active low	SIM8260C--M2 RESET# pin needs to be pulled up to 1.8V by adding 100KR externally
W_DISABLE1#	8		DI	Flight mode Active low	3.3V tolerant but can be driven by either 1.8V or 3.3V GPIO
TDD_SYNC_PPS	26	P3	DO	Pulse output indication NSA and SA sub6 for the beginning frame flag of DL-UL	The hardware of module support TDD_SYNC_PPS function by default
W_DISABLE2#[1]			DI	GNSS disable control Active low	
WoWWAN#	23		OD	Wake on the host interrupt output signal Active low	Need pulled up to 1.8V by adding 100KR externally
Configuration pins					
CONFIG_0	21		GND	Connected to ground internally	The module is configured as the WWAN USB3.1 interface type
CONFIG_1	69		GND	Connected to ground internally	
CONFIG_2	75		GND	Connected to ground internally	
CONFIG_3	1		NC	Not connected	
USB2.0/USB3.1					
USB_HS_DP	7		AIO	Differential USB bi-directional data positive	Main communication interface USB3.1 data rate up to 10Gbps USB2.0 data rate up to 480Mbps
USB_HS_DM	9		AIO	Differential USB bi-directional data negative	
USB_SS_TX_M	29		AO	USB3.1 transmit data negative	
USB_SS_TX_P	31		AO	USB3.1 transmit data positive	
USB_SS_RX_M	35		AI	USB3.1 receive data	

SIMCom Confidential

				negative	
USB_SS_RX_P	37		AI	USB3.1 receive data positive	
PCIe interface					
PETn0	41		AO	PCIe transmit data negative	Support PCIe Gen 3.0, data rate up to 8Gbps one lane. If unused, please keep open
PETp0	43		AO	PCIe transmit data positive	
PERn0	47		AI	PCIe receive data negative	
PERp0	49		AI	PCIe receive data positive	
REFCLKN	53		AIO	PCIe reference clock negative	
REFCLKP	55		AIO	PCIe reference clock positive	
PCIe assistant interface[7]					
PERST#	50		DIO	PCIe reset signal Active low	3.3V voltage domain, CLKREQ# and PEWAKE# required pull up external, If unused, please keep open
CLKREQ#	52		DIO	PCIe reference clock request signal Active low	
PEWAKE#	54		DIO	PCIe wake up control Active low	
(U)SIM interface[2]					
(U)SIM1_PWR	36	P4	PO	Power supply for (U)SIM1 card	1.8/3.0V voltage domain, (U)SIM interfaces should be protected against ESD, If unused, please keep open
(U)SIM1_DATA	34	P4	DIO	(U)SIM1 card data, which has been pulled up to SIM1_PWR via a 20KR resistor internally	
(U)SIM1_CLK	32	P4	DO	(U)SIM1 clock signal	
(U)SIM1_RESET	30	P4	DO	(U)SIM1 reset control	
(U)SIM1_DET	66	P3	DI	(U)SIM1 card detect, which has been pulled up to VDD_P3 via a 100KR resistor internally	
(U)SIM2_PWR	48	P5	PO	Power supply for (U)SIM2 card	SIM8260C/SIM8262E/SIM8262A-M2 support (U)SIM2 SIM8380G-M2 and SIM8380G -M2 not support (U)SIM2 interface, but the reserved eSIM card is connected to (U)SIM2 inside of the module Only SIM8380G-M2 support mmW
VDD_1V9				Power supply for mmW QTM VDD	
(U)SIM2_CLK	44	P5	DO	(U)SIM2 clock signal	
QTM3_PON		P3	DO	Power on/reset 3 for mmW QTM module	
(U)SIM2_RESET	46	P5	DO	(U)SIM2 reset control	
QTM2_PON		P3	DO	Power on/reset 2 for mmW QTM module	
(U)SIM2_DATA	42	P5	DIO	(U)SIM2 card data, which has been pulled up to (U)SIM2_PWR via a 20KR resistor internally	
QTM1_PON		P3	DO	Power on/reset 1 for mmW QTM module	
(U)SIM2_DET	40	P3	DI	(U)SIM2 card detect, which has been pulled up to VDD_P3 via a 100KR	

SIMCom Confidential

				resistor internally	
QTM0_PON			DO	Power on/reset 0 for mmW QTM module	
Antenna control interface[3]					
ANTCTL0	59	P3	DO	Antenna tuner control0	1.8V voltage domain. If unused, please keep open SIM8260C-M2, SIM8262E-M2 and SIM8262A-M2 are be defined as ANTCTL0
	63				1.8V voltage domain. If unused, please keep open SIM8380G-M2 and SIM8380G-M2 are be defined as ANTCTL0
LAA/N79_TX_EN*	59	P3	DO	Active high Coexistence signals of n79 and WIFI signal. When the output power of N79 is too high, output high level to WIFI module to turn off the WIFI 5G LNA.	SIM8380G-M2 and SIM8380G-M2 are defined as output signal and use for protect WIFI module.
	63		DO	Active high Coexistence signals of n79 and WIFI signal. When the output power of N79 is too high, output high level to WIFI module to turn off the WIFI 5G LNA.	SIM8260C-M2，SIM8262E-M2 are defined as output signal and use for protect WIFI module.
			DI	Active high Coexistence signals of LAA and WIFI signal. When WIFI 5G is output power too high, output high level to 5G module to turn off 5G module's LAA LNA.	SIM8262A-M2 are be defined as input signal and use for protect 5G module.
ANTCTL1	61	P3	DO	Antenna tuner control1	1.8V voltage domain. If unused, please keep open
QTM_THERM_DET			AI	mmW QTM module thermal detect	Only SIM8380G-M2 is defined as QTM_THERM_DET
ANTCTL2 (RFFE_SDATA)[3]	58	P3	DO (DIO)	Antenna tuner control2 (Antenna tuner MIPI DATA)[3]	1.8V voltage domain. If unused, please keep open
ANTCTL 3 (RFFE_SCLK)[3]	56	P3	DO	Antenna tuner control3 (Antenna tuner MIPI CLK)[3]	1.8V voltage domain. If unused, please keep open
I2S interface[4]					
I2S_CLK	20	P3	DO	I2S clock output	1.8V voltage domain, also can be used as PCM interface. If unused, please keep open

SIMCom Confidential

I2S_RX	22	P3	DI	I2S data input	1.8V voltage domain, also can be used as PCM interface. If unused, please keep open
ANTCTL4			DO	Antenna tuner control4	Only SIM8262E-M2 is defined as ANTCTL4, not support interrupt
I2S_TX	24	P3	DO	I2S data output	1.8V voltage domain, also can be used as PCM interface. If unused, please keep open
VIO_1V8			PO	power for tuner	Only SIM8262E-M2 is defined as VIO_1V8
I2S_WA	28	P3	DO	I2S word alignment select (L/R)	1.8V voltage domain, also can be used as PCM interface. If unused, please keep open
DPR2			DI	DPR (Dynamic Power Reduction) signal is used for SAR (Specific Absorption Rate) sensor interrupt input	Only SIM8262E-M2 is defined as DPR2
I2S_MCLK[6]	60	P3	DO	I2S master clock	1.8V voltage domain, also can be used as PCM interface. If unused, please keep open The function of I2S_MCLK is default
WL_TX_EN[6]			DI	Coexist WIFI to control LAA/N79	1.8V voltage domain, If unused, please keep open SIM8380G-M2 hardware support I2S_MCLK by default The function of I2S_MCLK and WL_TX_EN are not support at the same time Only SIM8380G-M2 support hardware configure WL_TX_EN function
I2C interface[5]					
I2C_SDA	68	P3	DIO	I2C data signal	1.8V voltage domain, If unused, please keep open
I2C_SCL	38	P3	DO	I2C clock signal	
COEX interface					
UART_TX COEX_TX*	64	P3	DO	Module hardware configures as normal communication UART (AT command) by default	If need coexistence signal function, please contact SIMCom support teams
UART_RX COEX_RX*	62	P3	DI		
Other pins					

SIMCom Confidential

LED1#	10		OD	The module status indicator via LED devices Active low	
DPR*	25	P3	DI	DPR (Dynamic Power Reduction) signal is used for SAR (Specific Absorption Rate) sensor interrupt input	
Notch					
Notch	12, 13, 14, 15, 16, 17, 18, 19			Notch	
WLAN ZIF connector interface*					
WL_SLEEP_CLK	Z2	P3	DO	WLAN Sleep clock 32.768K output	
COEX_UART_TX	Z4	P3	DO	LTE&WLAN coexistence data transmit	
COEX_UART_RX	Z5	P3	DI	LTE&WLAN coexistence data receive	
WL_EN_GPIO	Z6	P3	DO	Enable the WLAN Active high	
WL_GPIO	Z7	P3	DI(O)	Reserved GPIO for WLAN	
WL_LAA_RX	Z8	P3	DO	WLAN XFEM control for LAA receiver	
WL_PA_MUT	Z9	P3	DO	Module high band LTE and WLAN 2.4g PA control signal, pull up to turn off 2.4g chain 1 PA	
LAA_AS_EN	Z10	P3	DO	Allow LAA to control WLAN FEM during WLAN in sleep mode	
WL_SW_CTRL	Z12	P3	DI	WLAN module in active and sleep mode, external power switch control	
WL_VDD_IO	Z14		PO	Supply 1.8V to WLAN module	
WL_VDD_VM	Z16, Z17, Z18		PO	Supply 1.35V to WLAN module	These three voltages are typical values, and the voltage varies slightly with the working status of wifi
WL_VDD_VL	Z20, Z21, Z22, Z23, Z24, Z25		PO	Supply 0.95V to WLAN module	
WL_VDD_VH	Z27, Z28, Z29		PO	Power supply 1.95V to WLAN module	
GND	Z1, Z3, Z11, Z13, Z15, Z19, Z26, Z30				

NOTE

"*" means under development.
1. W_DISABLE2# can be set through the AT command by software, hardware function not support by default, if customer need to hardware support, hardware need to be customized.
2. SIM8380G-M2 and SIM8380G-M2 module reserve eSIM inside, without (U)SIM2 interface.
3. The RFFE signals are multiplexed with ANTCTL2 and ANTCTL3.

SIMCom Confidential

4. SIM8262E-M2 has two hardware versions, the one support digital audio interface, and the another one not support digital audio interface, for more details, please contact the SIMCom support team.
5. Only SIM8260C-M2 module I2C need pulled-up to 1.8V by 2.2KR resistor externally, other modules I2C internal be pulled-up to 1.8V by 2.2K resistor already.
6. About pin60 of the module, only SIM8380G-M2 support hardware configure WL_TX_EN function, by default, SIM8380G-M2 hardware support I2S_MCLK function, if need to WL_TX_EN function, SIM8380G-M2 need to special custom version, and only supporting 4 lines I2S interface (no I2S_MCLK signal), and if need to use I2S digital audio interface, the codec can only use ALC5616.
7. SIM8262E-M2/SIM8262A-M2/SIM8380G-M2* module PCIe assistant signal has 1.8V and 3.3V two versions, for more details, please contact the SIMCom support team.
8. For more details, please contact the SIMCom support team.

SIMCom Confidential

NOTE

1. Make sure that the module can reach maximum work performance under extended temperature or extreme conditions for a long time, thermal dissipation design is very important. On customer main PCB, the size of exposed copper thermal dissipation area and exposed copper thermal dissipation area of module should be consistent.

SIMCom Confidential

3. Interface Application

3.1 Power Supply

The recommended power supply of module is 3.8V and the voltage ranges from 3.135 V to 4.4V. Please make sure that the input voltage will never drop below 3.135V, otherwise the module will be powered off automatically. The module has 5 power pins and 11 ground pins. To ensure the module works properly, all pins should be connected.

Table 10: VBAT pins electrical characteristics

Symbol	Description	Min.	Typ.	Max.	Unit
VBAT	Module power supply voltage	3.135	3.8	4.4	V
I_{peak_sub6}	Peak current	-	-	1.8	A
$I_{peak_sub6+mmW}$	Peak current	-	-	3	A
I_{min}	Current in minimum power consumption mode (VBAT=3.8V, AT+CFUN=0 & AT+CSCLK=1 & USB no connect)	-	5.3	-	mA
$I_{leakage}$	Current in power off mode	-	128	150	uA

3.1.1 Power Supply Design Guide

For SIM826XX-M2 and SIM8380G-M2, when using 3.8V power supply, the max peak current can reach to 1.8A under the maximum transmit power of the module. Ensure that the VBAT voltage drop to minimum voltage is no less than 3.135V when the module at maximum power radio transmission, and considering the voltage drop and conversion efficiency, it is strongly recommended that the DC-DC or LDO output capacity should not be less than 3A.

For SIM8380G-M2, when using 3.8V power supply, ensure that the VBAT voltage drop to minimum voltage is no less than 3.135V when the module at maximum power radio transmission, and considering the voltage drop and conversion efficiency, it is strongly recommended that the DC-DC output capacity should not be less than 16A.

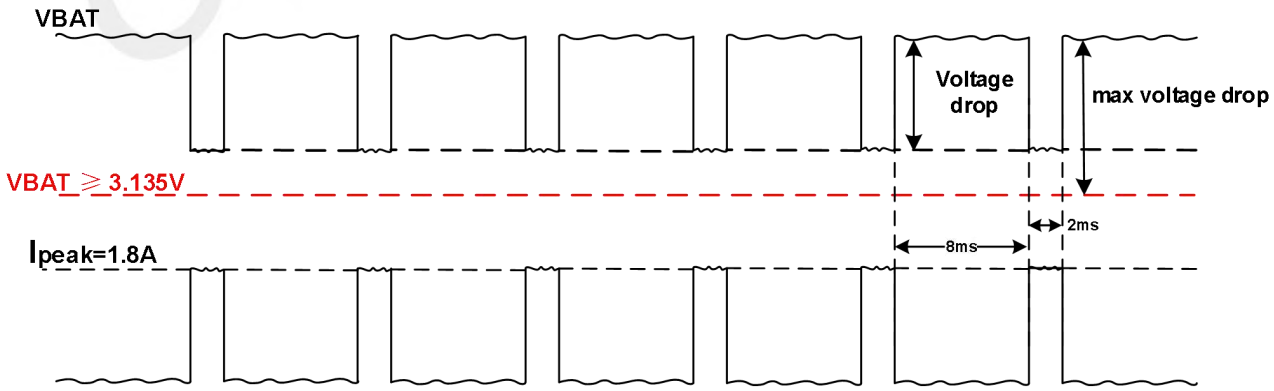

Figure 7: Maximum current consumption of the module

NOTE

1. The total capacitors of VBAT net are not less than 420uF.
2. When the voltage drop on VBAT reaches its maximum value, please ensure VABT voltage drop to minimum voltage is not less than 3.135V.
3. Only SIM8380G-M2 support mmW.

To decrease the voltage dropping, be closely to VBAT pin add compensation capacitors capacity value no less than 420uF. The following figure shows the reference circuit of power supply for the VBAT.

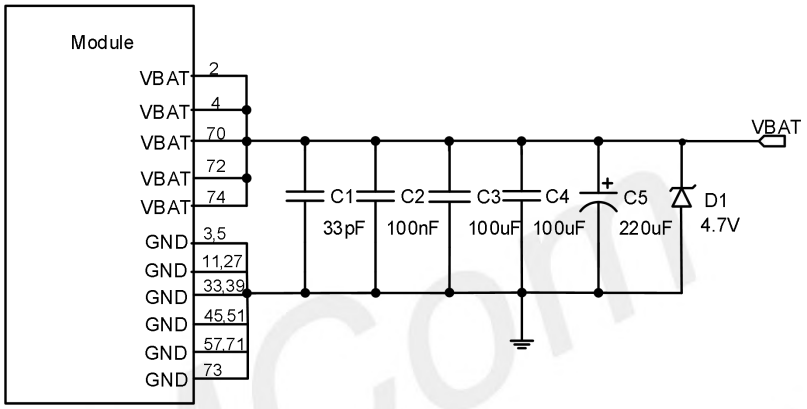

Figure 8: Power supply reference circuit

In this reference circuit, some multi-layer ceramic chip (MLCC) capacitors (0.1/1uF) with low ESR in high frequency band can be used for EMI suppression.
These capacitors should be put as close as possible to VBAT pins. Also, users should keep VBAT trace on circuit board wider than 3.0mm to reduce the PCB trace impedance.

Table 11: Definition of VBAT and GND pins

Pin name	Pin no.	Electrical description	description	Comment
VABT	2,4,70,72, 74	PI	Power supply Range: 3.135～4.4V Typical: 3.8V	These pins should be connected together to withstand sufficent current
VIO_1V8	65	PO	1.8V output voltage	
GND	3,5,11,27, 33,39,45,51 ,57,71,73		Ground	

NOTE

1. C5 is 220 μF tantalum capacitor, ESR=0.7Ω.
2. C1 and C2 are multi-layer ceramic chip (MLCC) capacitors from 33pF to 1uF with low ESR in high frequency band, which can Improves EMC performance.
3. D1 is used for ESD protection.

Table 12: Recommended D1 list

No.	Manufacturer	Part number	VRWM	Package	Ref. Designator
1	WILL	ESD56201D04	4.85V	DFN1610-2L	D1
2	CYGWAYON	WS4.5DPV	4.7V	DFN1610-2L	

Power supply layout guidelines:

- Both VBAT and return trace should be as short and wide as possible to minimize the voltage drop.
- The width of VBAT trace cannot be less than 3.0mm.
- These capacitors should be placed as closely as possible with VBAT pins.
- The VBAT trace should pass through TVS diode and capacitors, and then VBAT pins. The capacitor of the small value should be placed close to VBAT pins.
- The PCB design must have a solid ground plane as the primary reference plane for most signals.

The following figure is reference circuit of the module's PIN65.

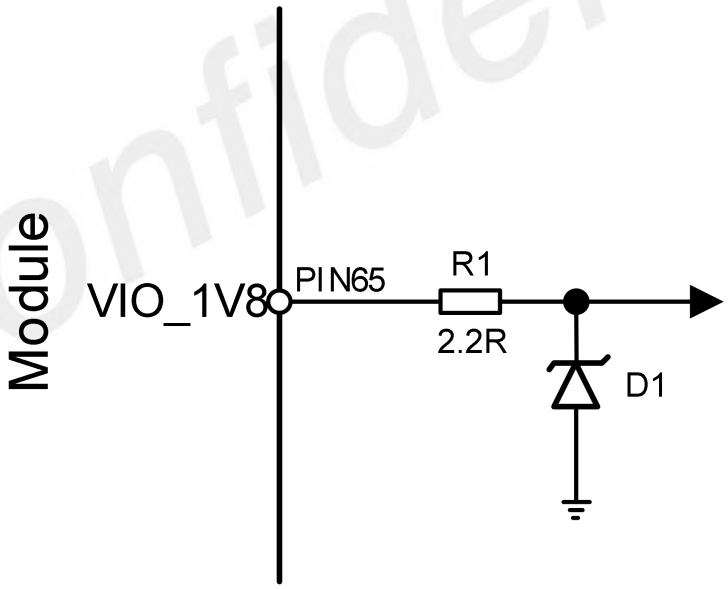

Figure 9: Power supply reference circuit

NOTE

1. Recommend placing a TVS at the PIN65 pin of the module for ESD protection, recommend TVS diode as show in follows table.

SIMCom Confidential

2. Recommend strings a 2.2R resister at the PIN65 pin of the module for ESD protection.
3. The signal of PIN65 VIO_1V8 add the filter capacitor total capacity value can't more than 1uF.

Table 13: PIN65 of the module recommend TVS list

No.	Manufacturer	Part number	VRWM	Package	Ref. Designator
1	WAYON	WE2.5DF-B	2.5V	DFN1006-2L	D1
2	YAGEO	RC0402JR072R2L	-	0402	R1

3.1.2 Recommended Power Supply Circuit

For SIM826XX-M2 and SIM8380G-M2, it is recommended to use a switching mode power supply or a linear regulator power supply. Make sure it can provide the current up to 3A at least.
Figure10 shows the linear regulator reference circuit with 5V input and 3.8V output.
Figure11 shows the switching mode power supply reference circuit with 5~12V input and 3.8V output.
For SIM8380G-M2, it is recommended to use a switching mode power supply, make sure it can provide the current up to 16A at least.
Figure12 shows the switching mode power supply reference circuit with 8.8~16V input and 3.8V output.

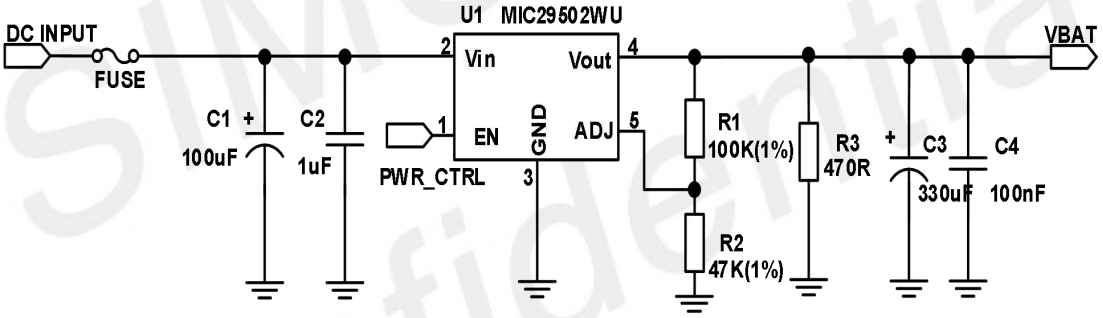

Figure 10: Linear regulator reference circuit

NOTE

1. An extra minimum load of R3 is required, to ensure it work properly under light load in sleep mode and power off mode. For the details about minimum load, please refer to specification of MIC29502WU.

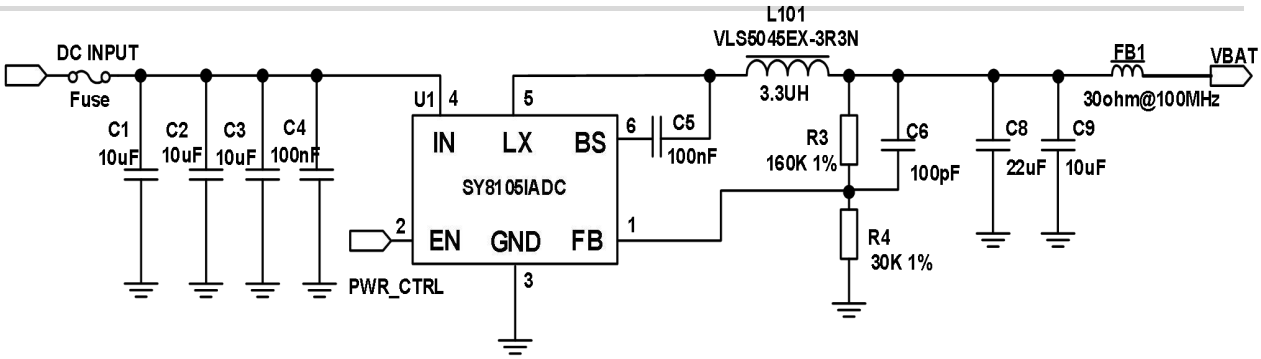

Figure 11: Switching mode power supply reference circuit

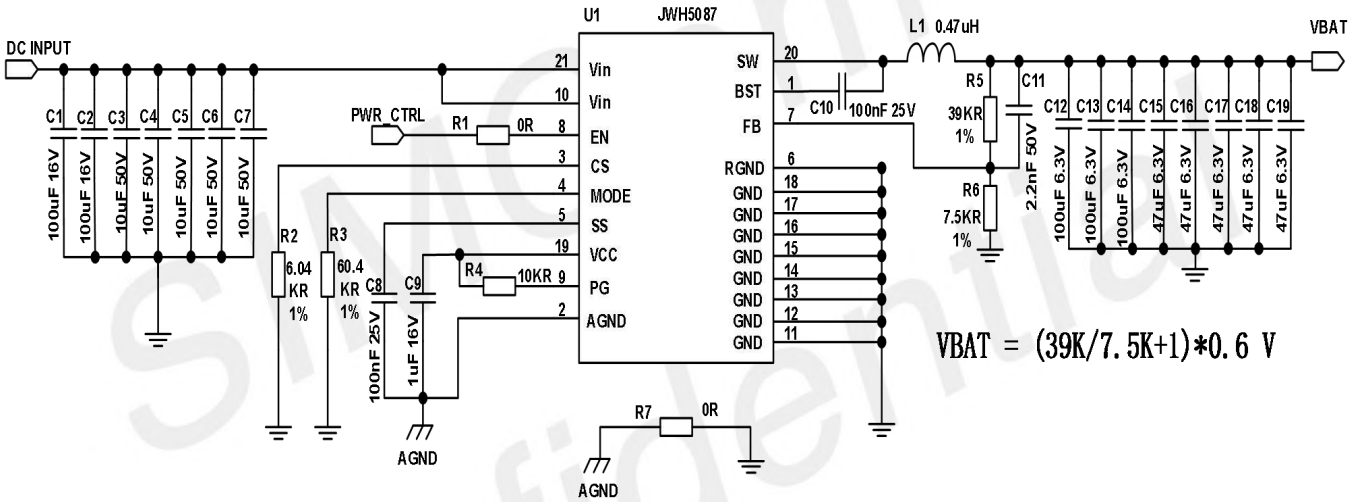

Figure 12: Switching mode power supply reference circuit for mmW module (SIM8380G-M2)

Table 14: Recommended FB1 and L1 list

Name	Manufacturer	Part number	Position number
Ferrite bead	Sunlord	UPZ1608E300-5R0TF	FB1
Power inductor	Coilcraft	XAL1010-451ME	L1

NOTE

1. In order to avoid damaging the module, please do not switch off the power supply when module works normally. Only after the module is shut down by FULL_CARD_POWER_OFF# or AT command, and wait for 12s at least, then the power supply can be cut off.
2. When the module in abnormal state, make sure design should have the ability to switch off the power supply and then switch on the power to restart the module. The PWR_CTRL signal recommend connect to the host and the power of module can be controlled.
3. Only SIM8380G-M2 support mmW.

SIMCom Confidential

3.1.3 Voltage Monitor

To monitor the VBAT voltage, the AT command “AT+CBC” can be used.

NOTE

1. For the details about voltage monitor commands, please refer to SIM826X-M2 Series_AT Command Manual_in the appendix.

SIMCom Confidential

3.2 Power On and Off Module

Driving the FULL_CARD_POWER_OFF# pin to a high level, module will be powered on. It can be driven by either 1.8V or 3.3V GPIO. The following figure shows the power on/off circuit.

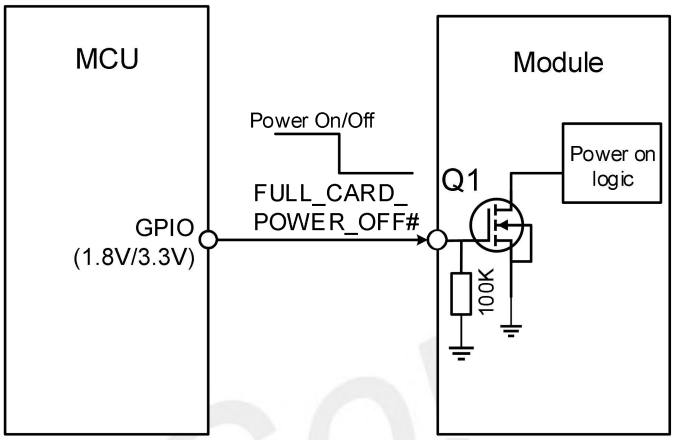

Figure 13: Reference power on/off circuit

Table 15: Definition of FULL_CARD_POWER_OFF# pin

Pin name	Pin no.	Electrical description	description	Comment
FULL_CARD_POWER_OFF#	6	DI, PD	High level: the module powers on Low level: the module powers off	It's 3.3V tolerant but can be driven by either 1.8V or 3.3V GPIO

3.2.1 Power On

The power on sequence is shown in the following figure.

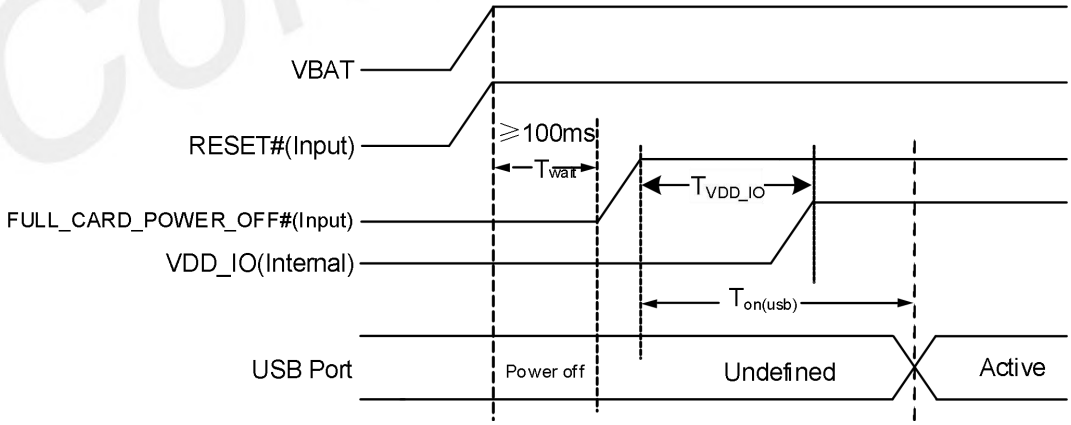

Figure 14: Power on sequence

Table 16: Power on timing and electrical characteristics

Symbol	Parameter	Min.	Typ.	Max.	Unit

T_{wait}	The waiting time from power supply available to power-on action	100	-	-	ms
$T_{on(usb)}$	The time from power-on action to USB port ready	-	13	-	s
T_{VDD_IO}	The time from power-on action to internal VDD_IO normal output	-	11.5	12	ms
V_{IH}	Input high level voltage on FULL_CARD_POWER_OFF# pin	-	1.8	4.5	V
V_{IL}	Input low level voltage on FULL_CARD_POWER_OFF# pin	0	-	0.2	V

NOTE

1. After the module is shut down, please wait at least 12 seconds before turning off the power, and then power on the module.
2. The test of T_{wait} is based on SIMcom development board test.
3. Before power on module, the pin of module cannot have voltage infuse, otherwise lead to module RF boot error.

3.2.2 Power Off

The following methods can be used to power off the module.

- Method 1: Power off the module by holding the FULL_CARD_POWER_OFF# pin to low level.
- Method 2: Power off module by AT command “AT+CPOF”.

NOTE

1. For the details about “AT+CPOF”, please refer to SIM826X-M2 Series_AT Command Manual in the appendix.
2. When the module is powered off by AT command, if the power supply and FULL_CARD_POWER _OFF# are not shut down, the module will automatically power on again.

Above normal power-off action will make the module disconnect from the network, allow the software to enter a safe state, and save key data before the module is powered off completely.

The power off sequence is shown in the following figure.

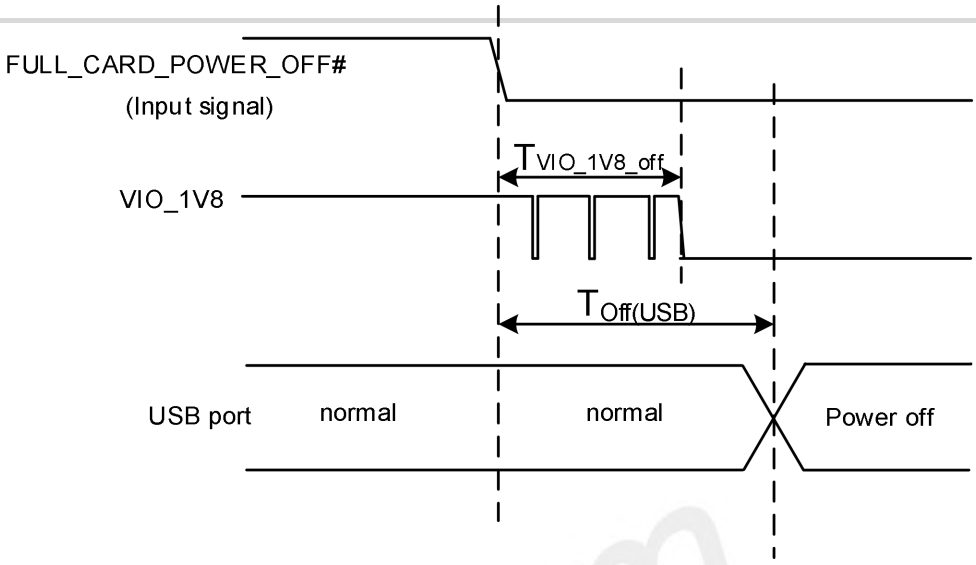

Figure 15: Power off sequence

Table 17: Power off timing and electrical characteristics

Symbol	Parameter	Time value			Unit
		Min.	Typ.	Max.	
$T_{VIO_1V8_off}$	The time from power off action to VIO_1V8 completely power down	-	3	-	s
$T_{Off(USB)}$	The time from power off action to USB port off	-	2	-	s

NOTE

1. After the module is shut down, please wait at least 12 seconds before turning off the power, and then power on the module.
2. The test of $T_{VIO_1V8_off}$ is based on SIMcom development board test.

3.3 Reset Function

Module can be reset by driving the RESET# pin down to a low level.

The RESET# signal has been internally pulled up to 1.8V, so it does not need pull up externally. Please refer to the following figure for the recommended reference circuit.

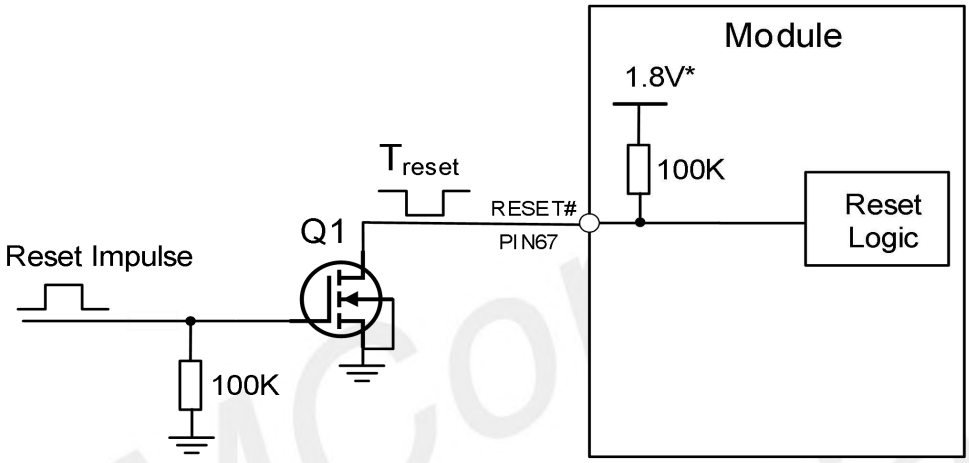

Figure 16: Reference reset circuit

Table 18: Recommended Q1 list

Name	Manufacturer	Part number	Position number
N-Channel MOSFET	WILLSEMI	WNM2046-3/TR	Q1

NOTE

1. "*" means if the RESET# pin want to be used, the RESET# pin of SIM8260C-M2 need be pulled up to 1.8V by 100KR resister externally.

Table 19: Definition of RESET# pin

Pin name	Pin no.	Electrical description	description	Comment

RESET#	67	DI	System reset control input Active low	SIM8260C-M2 RESET# pin needs to be pulled up to 1.8V by adding 100KR externally

The reset timing sequence of the module is shown in the following figure.

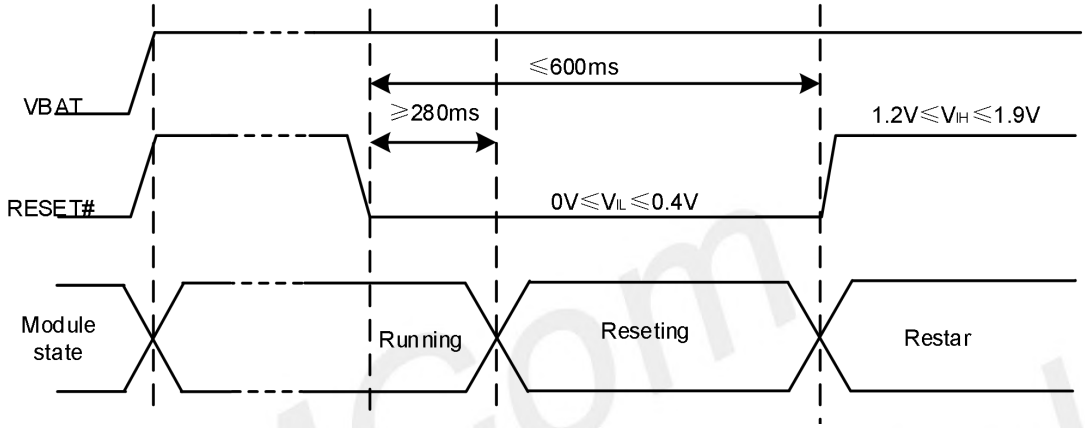

Figure 17: The reset timing sequence of the module

Table 20: RESET# pin electrical characteristics

Symbol	Description	Min.	Typ.	Max.	Unit
T_{reset}	Low level hold time on RESET# pin	280	-	600	ms
V_{IH}	Input high level voltage	1.2	-	1.9	V
V_{IL}	Input low level voltage	0	-	0.4	V

NOTE

1. Please ensure that there is no capacitance on RESET# pin.

SIMCom Confidential

3.4 I2C Interface

Module supports an I2C interface meet I2C specification version 3.0, with data rate up to 400kbps.

The following figure shows the I2C interface reference circuit.

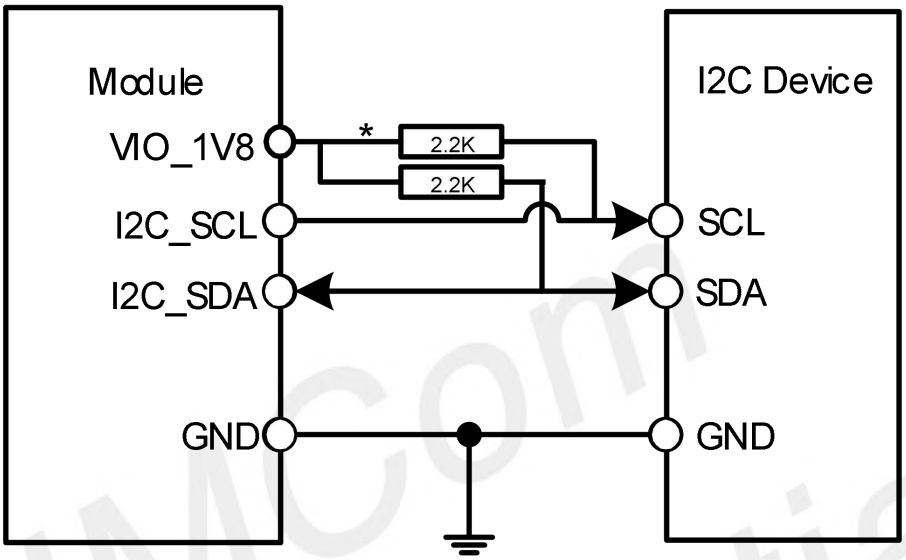

Figure 18: I2C reference circuit

Table 21: Definition of I2C interface

Pin name	Pin no.	Electrical description	Description	Comment
I2C_SDA	68	DIO	I2C data signal	
I2C_SCL	38	DO	I2C clock signal	

NOTE

1.“*” means only SIM8260C-M2’s I2C need pull up to 1.8V by 2.2KR resistor externally.

SIMCom Confidential

3.5 WoWWAN#*

The WoWWAN# pin is a system wake-on signal which can be used as an interrupt signal for the host. Normally it keeps high level. And it will change to low level when certain conditions occur, such as receiving SMS, voice call (CSD, video) or URC reporting, the low-level pulse time is 1 second.

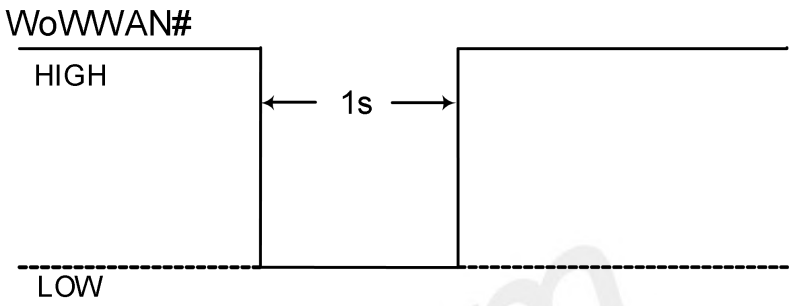

Figure 19: WoWWAN# signal level at SMS and URC report

WoWWAN# recommended reference circuit is shown in the following figure.

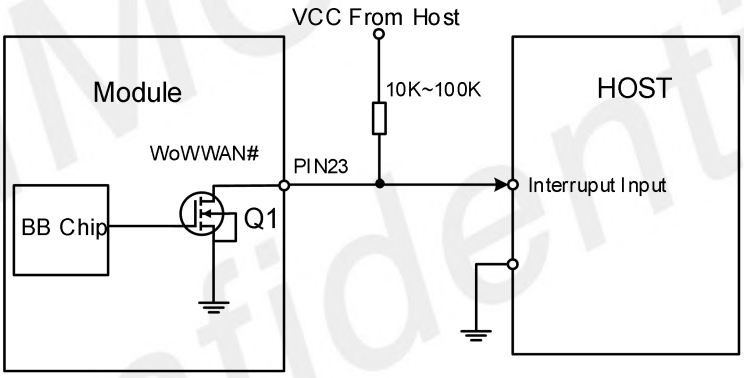

Figure 20: WoWWAN# reference circuit

Table 22: Definition of WoWWAN# pin

Pin name	Pin no.	Electrical description	Description	Comment
WoWWAN#	23	OD	Wake on the host Active low	

NOTE

1.“*” means under development, for more details, please contact the SIMCom support team.

3.6 USB Interface

Module supports one USB interface which complies with the USB3.1 and 2.0 specifications.

Customers can choose USB3.1 or USB2.0 for their needs. USB 3.1 data rate up to 10Gbps.

The USB interface is used for AT command communication, data transmission, GNSS NMEA output, firmware upgrade and software debugging.

The module supports USB suspend and resume mechanism which can save power consumption. If there is no data transmission on the USB bus, the module will enter suspend mode automatically.

The following figure is the USB reference circuit.

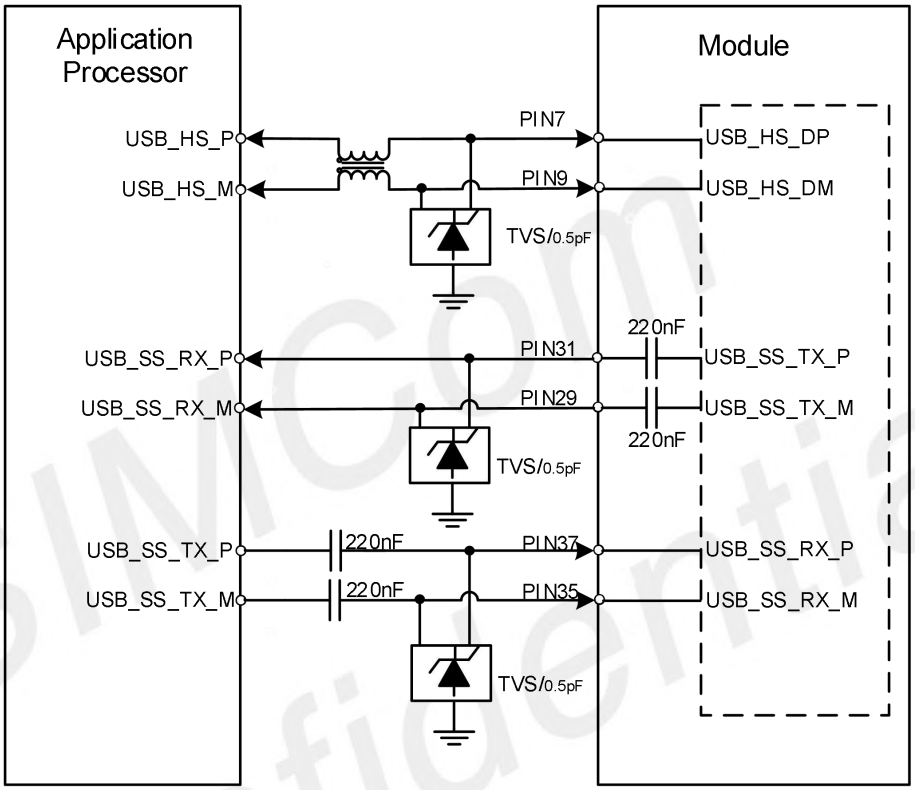

Figure 21: USB reference circuit

The following figure is the type-C USB reference circuit with CC detector.

SIMCom Confidential

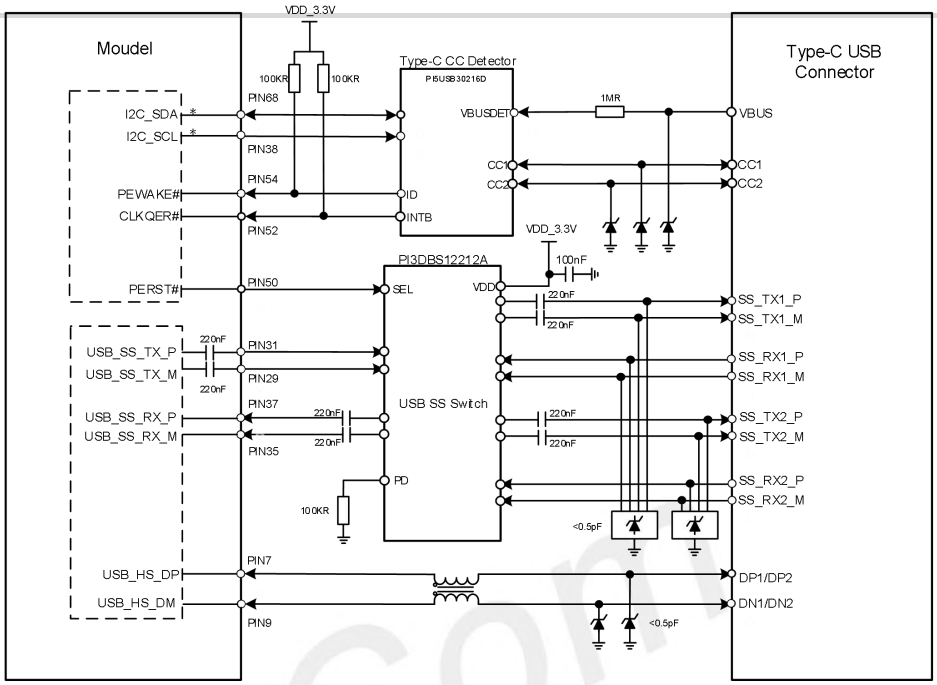

Figure 22: Type-C USB reference circuit with CC detector

NOTE

1.If use PCIe interface already, PEWAKE#, CLKREQ#, PERST# signal of the module cannot use for GPIO control, but can use other unused GPIO ports configuration.
2. Only SIM8260C-M2's I2C need pull up to 1.8V by 2.2KR resistor externally.
.

Table 23: Definition of USB interface

Pin name	Pin no.	Electrical description	Description	Comment
USB_HS_DP	7	AIO	Differential USB bi-directional data positive	USB3.1 data rate up to 10Gbps USB2.0 data rate up to 480Mbps
USB_HS_DM	9	AIO	Differential USB bi-directional data negative	
USB_SS_TX_M	29	AO	USB3.1 transmit data negative	
USB_SS_TX_P	31	AO	USB3.1 transmit data positive	
USB_SS_RX_M	35	AI	USB3.1 receive data negative	
USB_SS_RX_P	37	AI	USB3.1 receive data positive	
PEWAKE#*	54	DI	For CC detector function	Need external pull up to 3.3V by 100KR resistor
CLKREQ#*	52	DI	For indicating change in I2C registers interrupt signal.	
PERST#*	50	DO	USB3.1 type-C switch control signal	

NOTE

1.“*” means PEWAKE#, CLKREQ#, PERST# be used for PCIe control signal by default， if need configure type-c USB interface, and unused PCIe interface of module, recommend these three signal used for GPIO function.

Table 24: USB interface recommended CC detector, USB3.1 type-C switch and TVS diode list

No.	Manufacturer	Part number	Package
1	WILL	ESD5302N-3/TR	DFN1006-3L
2	PERICOM	PI5USB30216D	QFN12
3	PERICOM	PI3DBS12212A	QFN3X3

USB HS DP/DM layout guidelines:

- Require differential trace impedance is 90±10% Ω.
- The intra-lane length mismatch of the differential signal lanes is less than 1mm.
- Gap from other signals keeps 3xline width.
- External components should be placed near the USB connector.
- Trace routes away from other sensitive signals (RF, audio, and XO).
- The TVS diode should be placed close to the USB pins of M.2 connector.
- Maximum PCB trace length cannot exceed 100mm outside of module, the shorter the better.

USB SS TX/RX layout guidelines:

- Require differential trace impedance is 85±10% Ω.
- The intra-lane length mismatch of the differential signal lanes is less than 500um.
- Gap from other signals keeps 4xline width.
- Gap between Rx-to-Tx keeps 4xline width.
- External components should be placed near the USB connector.
- Trace routes away from other sensitive signals (RF, especially 2.4 GHz).
- The TVS diode should be placed close to the USB pins of M.2 connector.
- Route differential pairs in the inner layers with a solid GND reference to have good impedance control and to minimize discontinuities.
- Keep isolation between the Tx pair, Rx pair, and DP/DM to avoid crosstalk.
- If core vias are used, use no more than two core vias per signal line to limit stubs.

SIMCom Confidential

3.7 PCIe Interface

Module supports PCIe Gen3 one lane interfaces, which data rate up to 8Gbps, and can be used as EP or RC mode. CLKREQ# and PEWAKE# needs pull up to 3.3V by 10K resesitor in customer's design.
The following figure is the PCIe reference circuit.

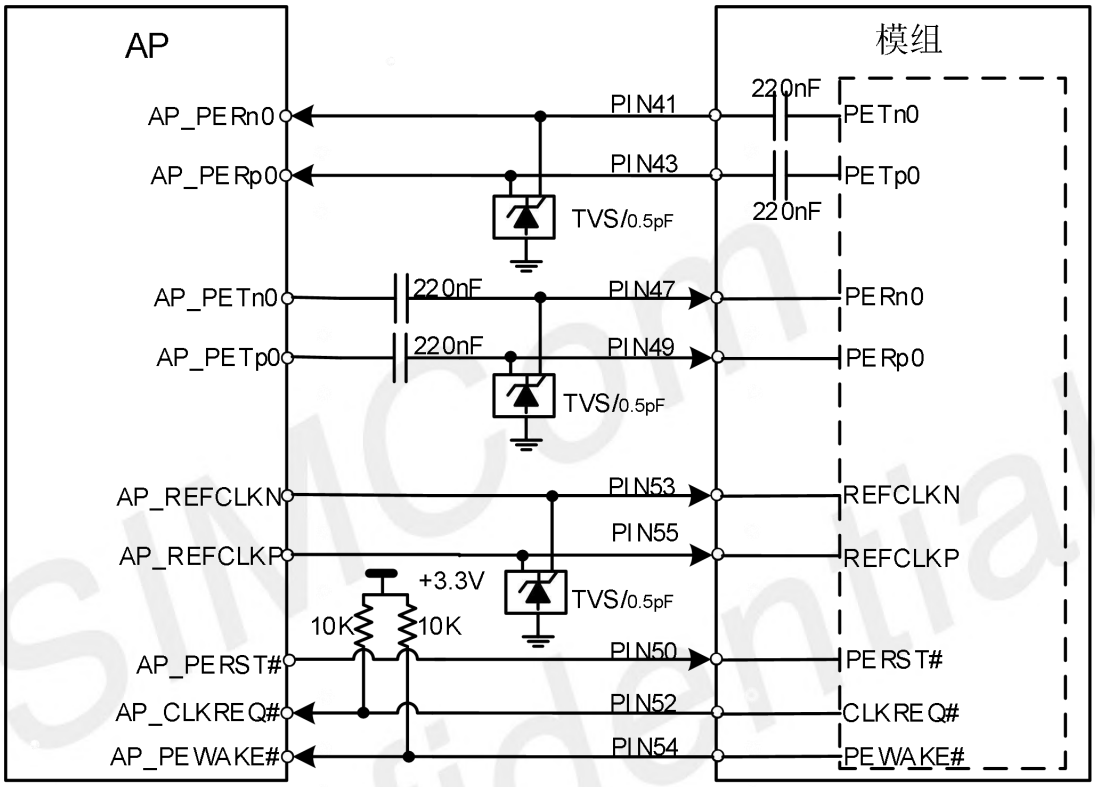

Figure 23: PCIe interface reference circuit (EP Mode)

NOTE

1. "*" means under development.
2. The AC capacitors of AP_PETn0 and AP_PETp0 should be closed to AP.
3. SIM8262E-M2/SIM8262A-M2/SIM8380G-M2* module PCIe assistant signal has 1.8V and 3.3V two versions, for more details, please contact the SIMCom support team.
4. If the module uses PCIe interface and USB interface in EP mode at the same time, the module low power mode current than only use PICe interface in EP mode higher.
5. If match with QPS615, please refer *SIM8380G-M2 & QPS615 & W82 & RTL8211F & QEP8121 & RTL8221B Connect Pin Mapping(xxxxxx)* document.

Table 25: Definition of PCIe interface

Pin name	Pin no.	Electrical description	Functional description	Comment
PETn0	41	AO	PCIe transmit data negative	
PETp0	43	AO	PCIe transmit data positive	
PERn0	47	AI	PCIe receive data negative	
PERp0	49	AI	PCIe receive data positive	
REFCLKN	53	AIO	PCIe reference clock negative	
REFCLKP	55	AIO	PCIe reference clock positive	
PERST#	50	DI	PERST# is a functional reset to the Add-In module active low	3.3V voltage domain, CLKREQ# and PEWAKE# required pull up external, Default as EP mode. If unused, please keep open
CLKREQ#	52	DIO	PCIe reference clock request signal active low	
PEWAKE#	54	DIO	PCIe wake up signal active low	

Table 26: PCIe interface recommended TVS diode list

No.	Manufacturer	Part number	Package
1	WILL	ESD5302N-3/TR	DFN1006-3L

SIMCom Confidential

3.7.1 PCIe timing

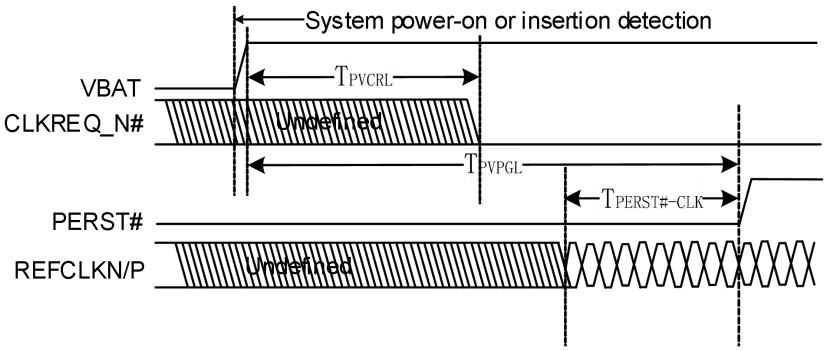

Symbol	Parameter	Min	Max	Units
T_{PVCRL}	Power Valid to CLKREQ# Output active		100	uS
T_{PVPGL}	Power Valid to PERST# Input inactive	1		mS
$T_{PERST\#-CLK}$	REFCLK stable before PERST# inactive	100		uS

Figure 24: PCIe power-on sequence requirements of M.2 specification

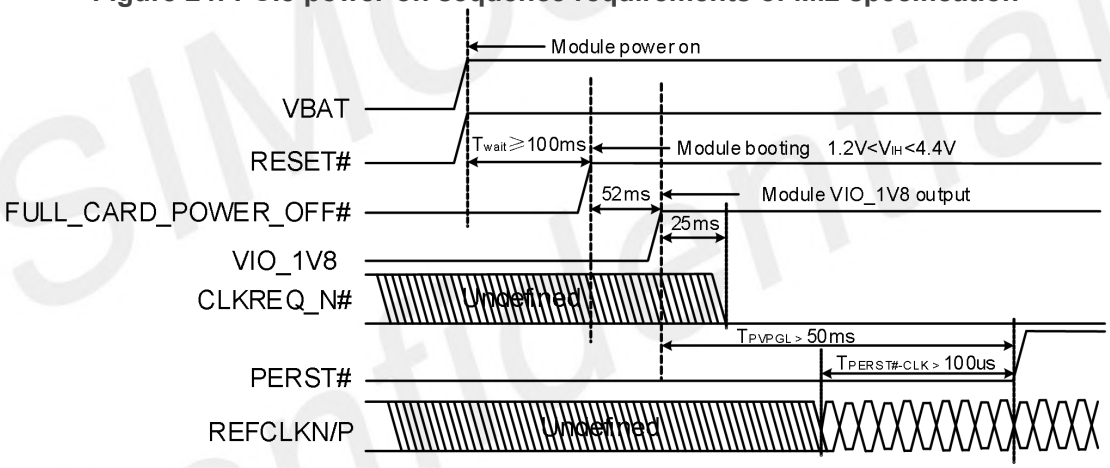

Figure 25: PCIe power-on sequence requirements of module

PCIe interface layout guidelines:

- Require differential trace impedance is 85±10% Ω.
- The intra-lane length mismatch of the differential signal lanes is less than 500um.
- Gap from other signals keeps 4xline width.
- Gap between Rx-to-Tx keeps 4xline width.
- Should be routed away from sensitive signals.
- The TVS diode should be placed close to the PCIe pins of M.2 connector.
- All other sensitive/high-speed signals and circuits must be protected from PCIe corruption.
- PCIe signals must be protected from noisy signals (clocks, SMPS).
- Each trace needs to be adjacent to a ground plane.
- Maximum PCB trace length cannot exceed 150mm outside of module, the shorter trace the better.

3.7.2 USB and PCIe Modes*

Module supports communication both USB and PCIe interfaces, the followings describe USB mode, USB-AT-based PCIe mode, eFuse-based PCIe mode.

USB mode

- Supports USB3.1 (backward compatible USB2.0) interface feature
- Supports MBIM/QMI/AT
- Communication can be switched to PCIe mode by AT command

USB interface is default communication interface between SIM826XX/SIM8X80-M2 module and a host. If need to use PCIe interface for the communication between a host, an AT command under USB mode can be used. For more details about the AT command, please refer to SIM826X-M2 Series_AT Command Manual.

It is suggested that USB 2.0 interface be reserved for firmware upgrade.

USB-AT-based PCIe mode

- Supports MBIM/QMI/AT
- Communication can be switched back to USB mode by AT command

When SIM826XX/SIM8X80-M2 module works at the USB-AT-based (switched from USB mode by AT command) PCIe mode, it supports MBIM/QMI/AT, and can be switched back to USB mode by AT command. But the firmware upgrade via PCIe interface is supported, so USB 2.0 interface must be reserved for the firmware upgrade.

eFuse-based PCIe mode*

- Supports MBIM/QMI/AT
- Supports Non-X86 systems and X86(Windows and Linux) system (supports BIOS PCIe early initial)

SIM826XX/SIM8X80-M2 can also be reprogrammed to PCIe mode based on eFuse. If the communication is switched to PCIe mode by burnt eFuse, the communication cannot be switched back to USB mode.

If the host does not support firmware upgrade through PCIe, then SIM826XX/SIM8X80-M2 USB2.0 interface (Pin 7 and Pin 9 of SIM826XX/SIM8X80-M2 M2 interface) and two test points (VIO_1V8 and FORCE_USB_BOOT) must be used for the firmware upgrade. For more details, please contact SIMCom support teams.

NOTE

1. “*” means under development, for more detail, please contact SIMCom support teams.
2. FORCE_USB_BOOT for system firmware upgrade.

SIMCom Confidential

3.7.3 PCIe for W82

PCIe can connect to W82 as WLAN data interface, WLAN ZIF connector for W82 power supply and assistance control, the module as RC and W82 as EP.

CLKREQ#, PEWAKE# and PERST# signals need to connect 3.3V to 1.8V shift level between the module and W82, the following figure is the PCIe reference circuit, the details design please refer to the reference circuit document.

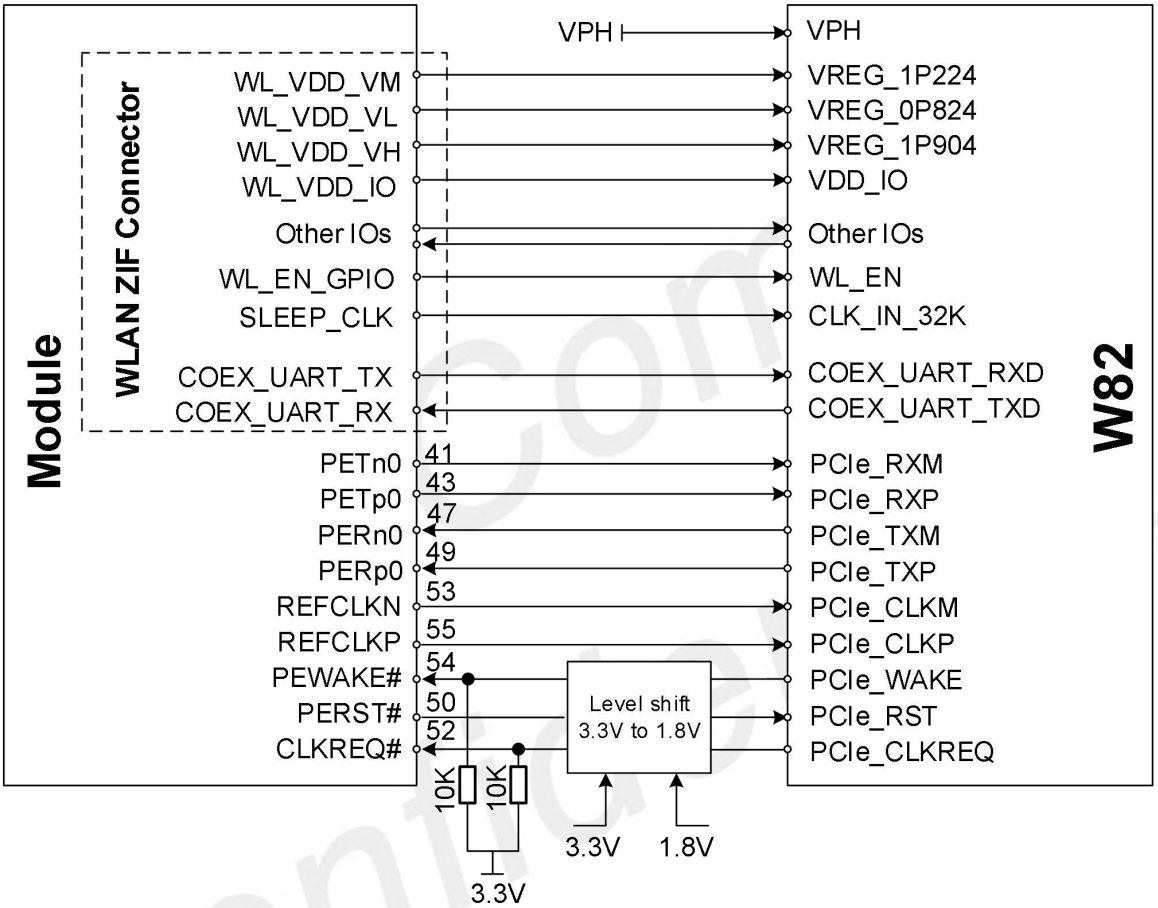

Figure 26: The module connect W82 reference circuit (PCIe assistant signal is 3.3V version)

Table 27: Recommended shift level list

No.	Manufacturer	Part number	Package
1	TI	TXS0104EYZT	GXU/ZXU(BGA)

NOTE

1. SIM8262E-M2 and SIM8262A-M2 has 1.8V and 3.3V PCIe assistant signal hardware versions, for

3.3V PCIe assistant hardware version, on the module side, the PEWAKE# and CLKREQ# signals need to be pulled up to 3.3V by 10K resister, for 1.8V PCIe assistant hardware version, on the module side, the PEWAKE# and CLKREQ# signals need to be pulled up to 1.8V by 10K resister.
2. In W82 module, the PEWAKE# and CLKREQ# signals internal pull up to 1.8V already, if module is 3.3V PCIe assistant control signal version, between module and W82 need add 3.3V to 1.8V level shifter.
3. About WLAN ZIF connector pin description of the module, please refers to chapter2.1.2.
4. SIM8262E-M2/SIM8262A-M2/SIM8380G-M2* has 1.8V and 3.3V PCIe assistant signal hardware versions, Please pay attention to whether the levels match when use PCIe interface.

SIMCom Confidential

3.7.4 PCIe for RTL8125B-TE

PCIe can connect to RTL8125B-TE as Ethernet data interface, the module as RC and RTL8125B-TE as EP.

CLKREQ# and PEWAKE# needs pull up to 3.3V by 10K resistor in customers' design, the details design please refers to the reference circuit document.

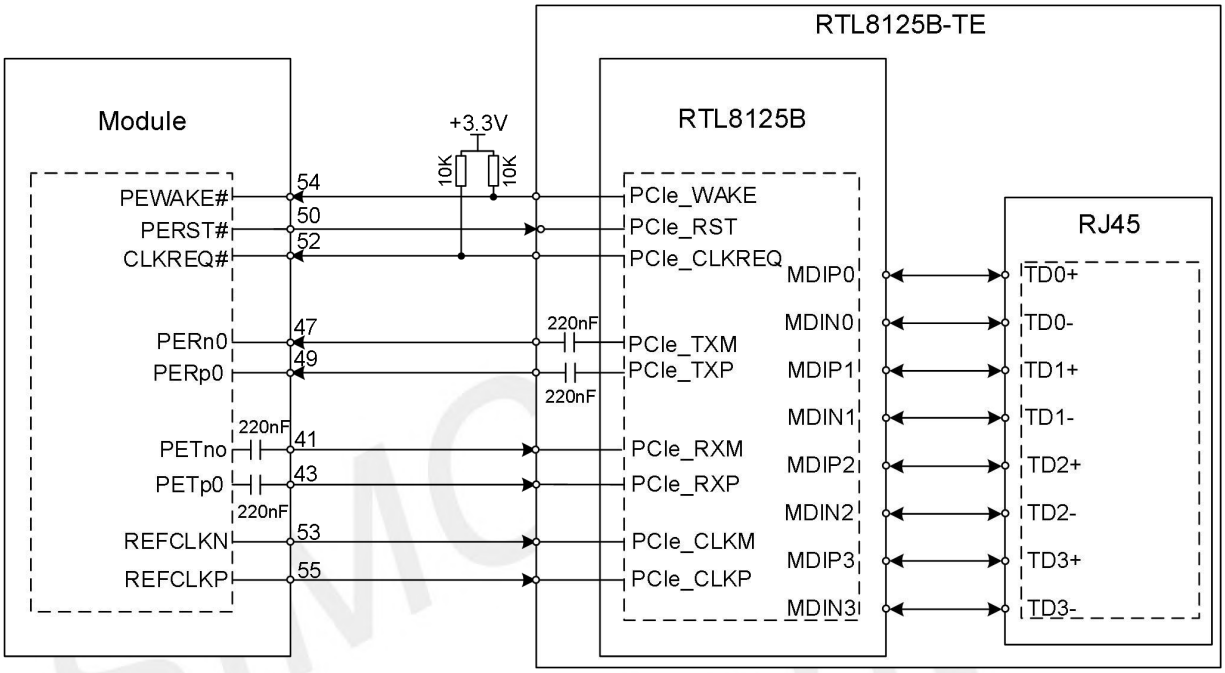

Figure 27: The module connect RTL8125B-TE reference circuit (3.3V PCIe assistant signal version)

Table 28: Recommended RTL8125B IC list

No.	Manufacturer	Part number	Package
1	REALTEK	RTL8125B-CG	6mm*6mm*1mm

NOTE

1. The AC capacitors of PCIe_TXM and PCIe_TXP should be placed near the RTL8125B.
2. RTL8125B's PCIe_WAKE, PCIe_RST, PCIe and CLKREQ signal voltage domain is 3.3V， if module is 1.8V PCIe assistant control signal version, between module and RTL8125B need add 1.8V to 3.3V level shifter, on level shifter 1.8V side, PCIe_WAKE、PCIe_RST、PCIe_CLKREQ need to pull up to 1.8V, on level shifter 3.3V side, PCIe_WAKE、PCIe_RST、PCIe_CLKREQ need to pull up to 3.3V.
3. SIM8262E-M2 and SIM8262A-M2 has 1.8V and 3.3V PCIe assistant signal hardware versions, Please pay attention to whether the levels match when use PCIe interface.
4. For more details, please contact SIMCom support teams.

3.7.5 PCIe for Qualcomm IPQxxxx*

PCIe can connect to qualcomm IPQxxxx as CPE application, the module as EP and qualcomm IPQxxxx as RC.

Due to IPQxxxx's PCIe_WAKE, PCIe_RST and PCIe_CLKREQ signal voltage domain is 1.8V, So, CLKREQ# and PEWAKE# needs pull up to 1.8V by 10K resistor in customers' design, the following figure is the module connect to IPQxxxx connection diagram.

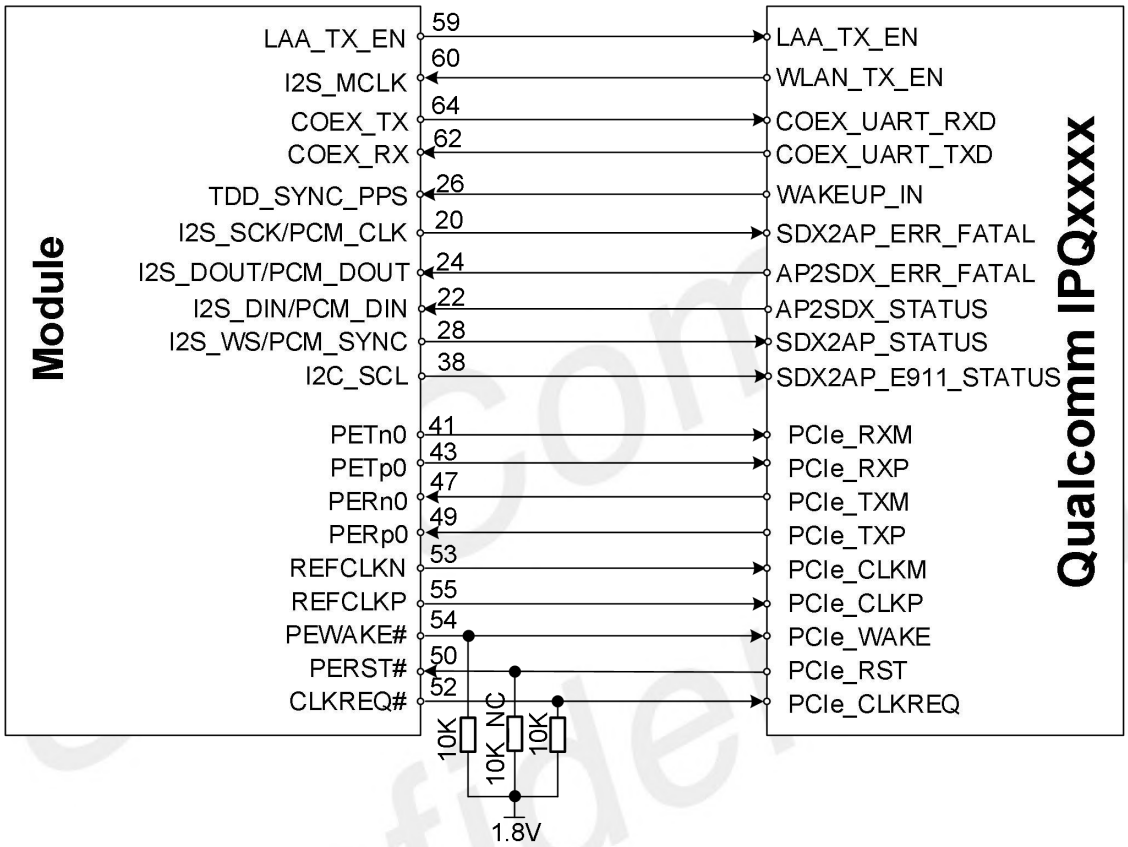

Figure 28: The module connect IPQxxxx reference circuit (1.8V PCIe assistant signal version)

NOTE

1. Qualcomm IPQxxxx's PCIe_WAKE, PCIe_RST and PCIe_CLKREQ signal voltage domain is 1.8V, if module is 3.3V PCIe assistant control signal version, between module and IPQxxxx need add 3.3V to 1.8V level shifter, on level shifter 1.8V side, PCIe_WAKE、PCIe_RST、PCIe_CLKREQ need to pull up to 1.8V, on level shifter 3.3V side, PCIe_WAKE、PCIe_RST、PCIe_CLKREQ need to pull up to 3.3V.
2. SIM8262E-M2 and SIM8262A-M2 has 1.8V and 3.3V PCIe assistant signal hardware versions, Please pay attention to whether the levels match when use PCIe interface.
3. "*" means the module's hardware and software not support this function by default, if need module coordinate IPQxxxx use, please contact SIMCom support teams.

3.8 (U)SIM Interface

Module supports two (U)SIM cards but single standby. Both (U)SIM1 and (U)SIM2 are dual-voltage 1.8V or 3.0V.

Table 29: (U)SIM electrical characteristics in 1.8V mode ((U)SIM_PWR=1.8V)

Symbol	Parameter	Min.	Typ.	Max.	Unit
(U)SIM_PWR	Power supply for (U)SIM card	1.65	1.8	1.95	V
V_{IH}	High-level input voltage	1.26	-	1.95	V
V_{IL}	Low-level input voltage	0	-	0.36	V
V_{OH}	High-level output voltage	1.44	-	1.8	V
V_{OL}	Low-level output voltage	0	-	0.4	V

Table 30: (U)SIM electrical characteristics in 3.0V mode ((U)SIM_PWR=3.0V)

Symbol	Parameter	Min.	Typ.	Max.	Unit
(U)SIM_PWR	Power supply for (U)SIM card	2.7	3.0	3.05	V
V_{IH}	High-level input voltage	2.1	-	3.05	V
V_{IL}	Low-level input voltage	0	0	0.6	V
V_{OH}	High-level output voltage	2.4	-	3.0	V
V_{OL}	Low-level output voltage	0	0	0.4	V

Table 31: Definition of (U)SIM interface

Pin name	Pin no.	Electrical description		Description	Comment
(U)SIM1_PWR	36	P4	PO	Power supply for (U)SIM1 card	1.8/3.0V voltage domain, (U)SIM interfaces should be protected against ESD, If unused, please keep open
(U)SIM1_DATA	34	P4	DIO	(U)SIM1 card data, which has been pulled up to SIM1_PWR via a 20KR resistor internally	
(U)SIM1_CLK	32	P4	DO	(U)SIM1 clock signal	
(U)SIM1_RESET	30	P4	DO	(U)SIM1 reset control	
(U)SIM1_DET	66	P3	DI	(U)SIM1 card detect, which has been pulled up to VDD_P3 via a 100KR resistor internally	
(U)SIM2_PWR	48	P5	PO	Power supply for (U)SIM2 card	SIM8260C/SIM8262E/SIM8262A-M2 support (U)SIM2
(U)SIM2_CLK	44	P5	DO	(U)SIM2 clock signal	
(U)SIM2_RESET	46	P5	DO	(U)SIM2 reset control	
(U)SIM2_DATA	42	P5	DIO	(U)SIM2 card data, which has been pulled up to SIM2_PWR via a 20KR resistor internally	SIM8380G-M2 and SIM8380G-M2 not support (U)SIM2 interface, but the reserved eSIM card is connected to (U)SIM2 inside of the module
(U)SIM2_DET	40	P3	DI	(U)SIM2 card detect, which has been pulled up to P3 via a 100KR resistor internally	

SIMCom Confidential

The following table shows recommended TVS of ESD protect and (U)SIM socket.

Table 32: Recommended TVS and always close (U)SIM socket list

Name	Manufacturer	Part number
TVS	ST	ESDA6V1-5W6
(U)SIM socket	MOLEX	5039600696

If the (U)SIM card hot-swap function is not used, customers can keep the (U)SIM_DET pin open.

The (U)SIM card layout guidelines:

- Make sure that the (U)SIM card holder should be far away from the antenna while in PCB layout.
- (U)SIM traces should keep away from RF lines, VBAT and high-speed signal lines.
- The traces should be as short as possible.
- Keep (U)SIM holder's GND connect to main ground directly.
- Shielding the (U)SIM card signal by ground.
- Recommended to place a 33pF～1uF capacitor on (U)SIM_PWR line and keep close to the holder.
- The rise/fall time of (U)SIM_CLK should not be more than 40ns.
- The (U)SIM_CLK trace needs to be adjacent to a ground plane three-dimensional.
- The parasitic capacitance of TVS should not exceed 30pF and the TVS should be placed close to the (U)SIM socket.

NOTE

1. SIM8380G-M2 and SIM8380G-M2 module integrates eSIM inside, without (U)SIM2 interface.

SIMCom Confidential

3.8.1 Always Close (U)SIM Card Design

Always close (U)SIM card reference circuit as shown in the following figure.

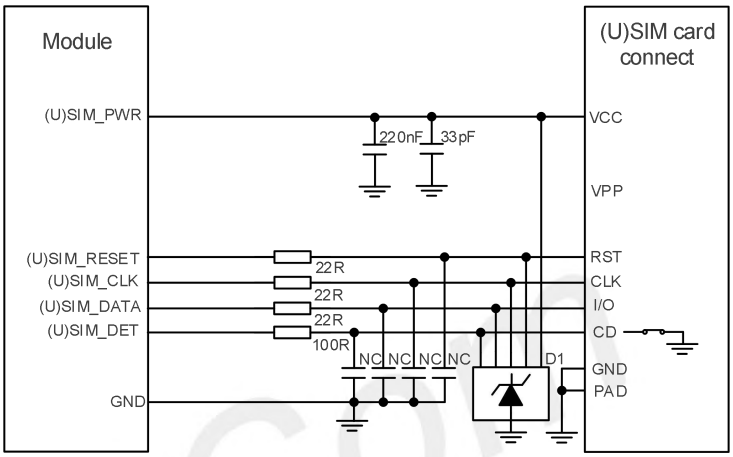

Figure29: Always close (U)SIM card reference circuit

- When no (U)SIM card insert，CD pin connect with GND，(U)SIM_DET is low level;
- When (U)SIM card insert，CD pin disconnect with GND，(U)SIM_DET is high level.

3.8.2 Always Open (U)SIM Card Design

Always open (U)SIM card reference circuit as shown in the following figure.

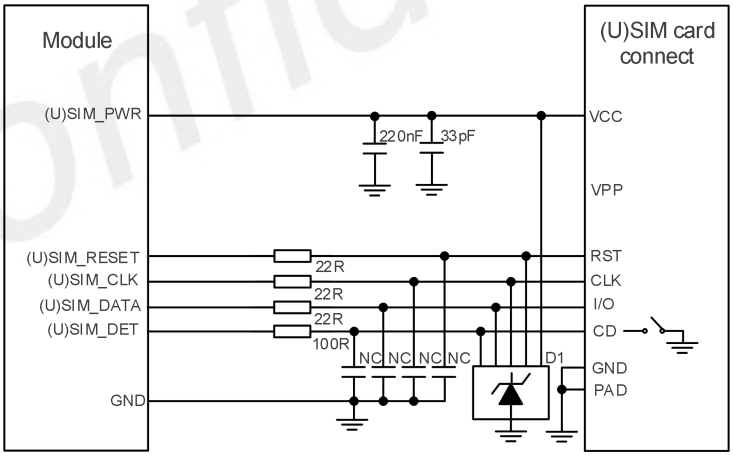

Figure30: Always open (U)SIM card reference circuit

- When no (U)SIM card insert，CD pin disconnect with GND，(U)SIM_DET is high level;
- When (U)SIM card insert，CD pin dconnect with GND，(U)SIM_DET is low level.

NOTE

1. The module's (U)SIM1_DET and (U)SIM2_DET pins have been internally pulled up VDD_P3 already

by 100KR resister.

3.8.3 Without CD PIN (U)SIM Card Design

If needn't (U)SIM hot swap function, please keep (U)SIM_DET pin disconnect, without CD pin (U)SIM card reference circuit as shown in the following figure.

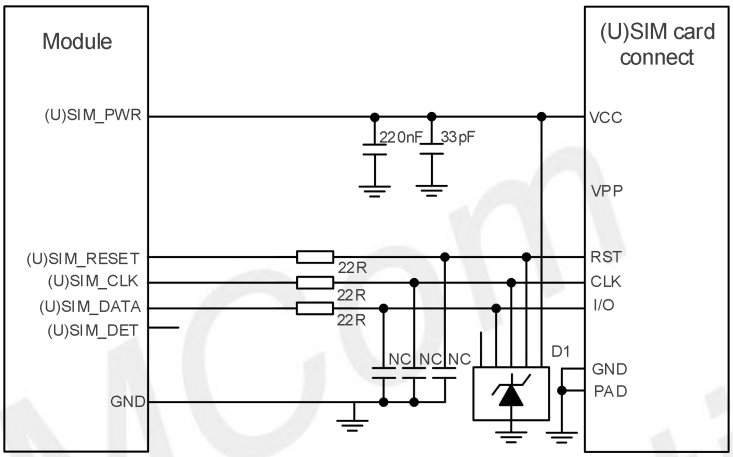

Figure31: Without CD pin (U)SIM card reference circuit

SIMCom Confidential

3.9 I2S Interface

Module supports one I2S interface for external codec, which follows the requirements in the Phillips I2S bus specification.

Table 33: I2S format

Characteristics	Specification
Line interface format	Linear (Fixed)
Data length	16bits (Fixed)
I2S clock/sync source	Master mode (Fixed)
I2S clock frequency	1.536MHz (Default)
I2S MCLK frequency	12.288MHz (Default)
Data ordering	MSB

NOTE

1. For the details about I2S AT commands, please refer to SIM826X-M2 Series_AT Command Manual in the appendix.

3.9.1 I2S Timing

The module supports I2S sampling rate of 48 KHz and 32-bit coding signal (16-bit length), the timing sequence is shown in the following figure.

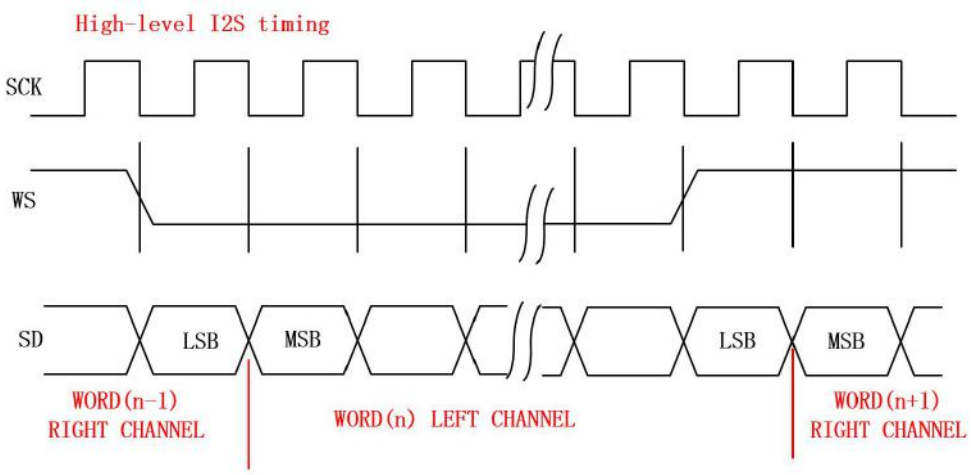

Figure 32: I2S timing

Table 34: I2S timing parameters

Signal	Parameter	Description	Min.	Typ.	Max.	Unit
I2S_MCLK	Frequency	Working Frequency	–	12.288	12.288	MHz
	T	Clock period	81.380	81.380	–	ns
	t(HC)	Clock high	0.45T	–	0.55T	ns

	t(LC)	Clock low	0.45T	–	0.55T	ns
I2S_CLK	Frequency	Working Frequency	–	1.536	–	MHz
	T	Clock period	–	651	–	ns
	t(HC)	Clock high	0.45T	–	0.55T	ns
	t(LC)	Clock low	0.45T	–	0.55T	ns
I2S_WA	Frequency	Working Frequency	–	48	–	KHz
	t(sr)	DIN/DOUT and WA input setup time	16.276	–	–	ns
	t(hr)	DIN/DOUT and WA input hold time	0	–	–	ns
	t(dtr)	DIN/DOUT and WA output delay	–	–	65.10	ns
	t(htr)	DIN/DOUT and WA output hold time	0	–	–	ns

3.9.2 I2S Reference Circuit

The following figure is the external codec reference design circuit.

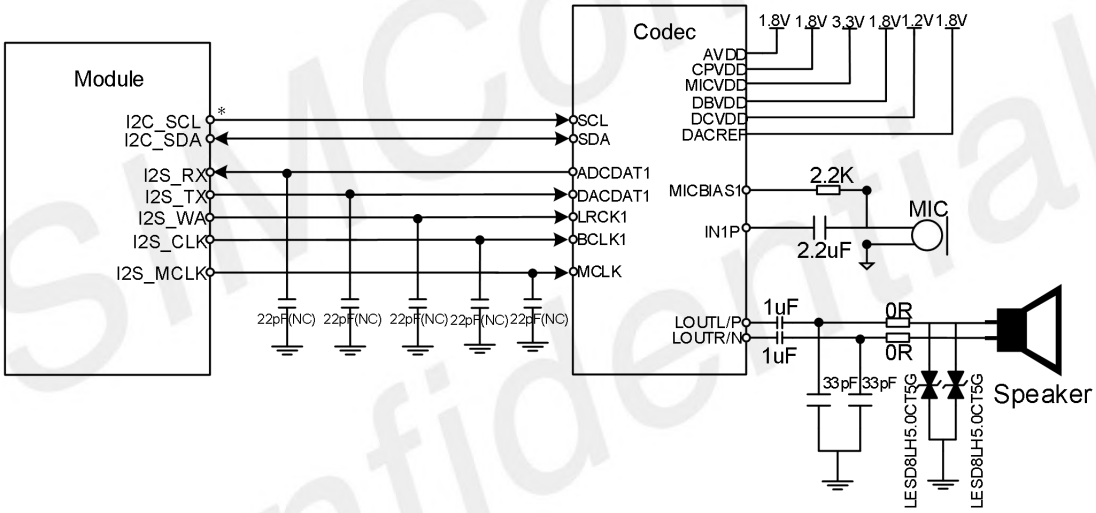

Figure 33: Audio codec diagram circuit

Table 35: Definition of I2S interface

Pin name	Pin no.	Electrical description	Description	Comment
I2S_CLK	20	DO	I2S clock output	1.8V voltage domain, also can be used as PCM interface, if unused, please keep open
I2S_RX	22	DI	I2S data input	
I2S_TX	24	DO	I2S data output	
I2S_WA	28	DO	I2S word alignment select (L/R)	
I2S_MCLK	60	DO	I2S master clock	

NOTE

1. If use ALC5616 audio codec, the software can configuration ALC5616 internal registers, and can configuration 4 lines I2S (no I2S_MCLK signal) interface or 5 lines I2S (embrace I2S_MCLK signal) interface.
2. If use NAU8810 audio codec, the software only configure 5 lines I2S (embrace I2S_MCLK signal) interface.

The PCM interface is multiplexing with I2S interface. The default audio interface of the module is I2S.

Table 36: The PCM interface is multiplexing with I2S interface

Pin name	PCM interface
I2S_RX	PCM_DIN
I2S_TX	PCM_OUT
I2S_WA	PCM_SYNC
I2S_CLK	PCM_CLK
I2S_MCLK	-

Audio layout guidelines:
Analog input
- 0.2mm trace widths; 0.2mm spacing between other signals trace.
- Pseudo differential route for MIC.
- Isolate from noise sources, such as antenna, RF signals, SMPS, clocks, and other high-speed signals.

Analog output
- Isolate from noise sources such as antenna, RF signals, SMPS, clocks, and other high-speed signals.
- Speaker output signal – route as differential pair with 0.5mm trace widths.

Audio power and GND
- Recommend add magnetic bead on AVDD net reserved for debug.
- VDD cannot directly use VBAT as the power supply.
- AGND need add GND via to the main GND plane directly.

NOTE

1. Only SIM8260C-M2 need to add a 2.2KR resistor to 1.8V externally, other modules I2C have 2.2K pull-up inside.

3.10 DPR*

DPR (Dynamic Power Reduction) signal is used for SAR (Specific Absorption Rate) requirements. The RF output power would reduce if this signal is triggered by sensor under some certain conditions, such as SAR sensor triggered, defined by customers.

User can activate this function with AT command.

Table 37: Definition of DPR# pin

Pin no.	Pin name	Pin status	Function
25	DPR	Low	Max transmitting power will be reduced by set through AT command
		High	Max transmitting power will not be reduced (default)
		Floating	Max transmitting power will not be reduced

NOTE

1. “*” means under development, for details please contact SIMCom support teams.

SIMCom Confidential

3.11 CONFIG Pins

These signals are provided to indicate its specific configuration that is WWAN-USB3.1 of SIM826XX/SIM8X80-M2.

Table 38: CONFIG pins state of the module

Pin no.	Pin name	Description
21	CONFIG_0	Connected to ground internally
69	CONFIG_1	Connected to ground internally
75	CONFIG_2	Connected to ground internally
1	CONFIG_3	Not connected

In the M.2 specifications, the CONFIG pins are defined as below.

Table 39: CONFIG interface definition

CONFIG_0 (Pin 21)	CONFIG _1 (Pin 69)	CONFIG _2 (Pin 75)	CONFIG _3 (Pin 1)	Module type and main host interface[1]	Comments
GND	GND	GND	NC	WWAN – USB 3.1	Vender defined

NOTE

1. The USB3.1 and PCIe interface can be supported at the same time of SIM826XX_SIM8X80 M2 series module.

SIMCom Confidential

3.12 LED1#

LED1# is open drain output and is used to allow module to provide network status via LED which will be provided by the host.

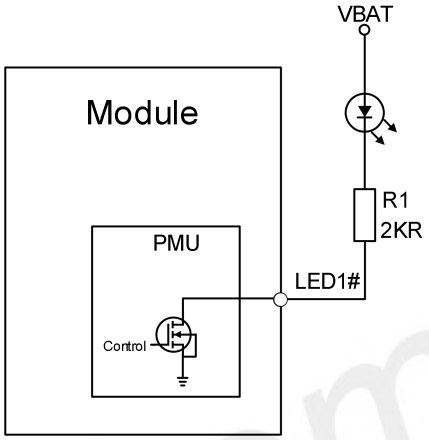

Figure 34: LED1# reference circuit

Table 40: Definition of LED1# pin

Pin name	Pin no.	Electrical description	Description	Comments
LED1#	10	OD	The module status indicator via LED devices Active low	

NOTE

1. The value of the resistor R1 depends on the LED characteristics. The recommend value of R1 is 2KR.

The timing parameters are shown in the following table.

Table 41: LED1# pin status

LED1# pin status	Module status
Always On	Searching network; call connection (including 5G, VOLTE)
100ms ON, 100ms OFF	5G Data transmits; 5G registered network
200ms ON, 200ms OFF	3G/4G Data transmits; 4G registered network
800ms ON, 800ms OFF	3G registered network
OFF	Power off: Sleep mode

3.13 W_DISABLE1#

The W_DISABLE1# pin controls module to enter the flight mode. When the W_DISABLE1# signal is pulled to low level, RF function would be disabled. Otherwise, the RF function would be active.

Recommended reference circuit is shown in the following figure.

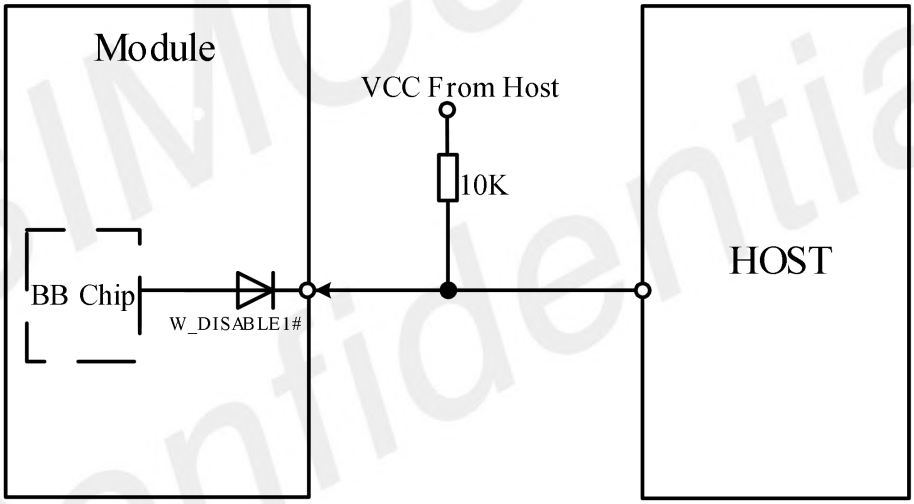

Figure 35: W_DISABLE1# pin reference circuit

Table 42: Definition of W_DISABLE1# pin

Pin name	Pin no.	Electrical description	Description	Comments
W_DISABLE1#	8	DI	Flight mode	3.3V tolerant but can be driven by either 1.8V or 3.3V GPIO

NOTE

1. The W_DISABLE1# signal is pulled up to 1.8V by software configure in the module.

SIMCom Confidential

Table 43: W_DISABLE1# pin status

W_DISABLE1# pin status	Module operation
Input low level	Flight mode: RF is disabled (SIM card function turn on)
Input high level	AT+CFUN=4: Flight mode(SIM card function turn on) AT+CFUN=1: RF is enabled (default) AT+CFUN=0: Minimum power mode(SIM card function turn off)

SIMCom Confidential

3.14 TDD_SYNC_PPS*

In SIM826XX/SIM8X80-M2 design, TDD_SYNC_PPS and W_DISABLE2# function coexists in PIN26 of module. Hardware support TDD_SYNC_PPS function by default.

When PIN26 configure as TDD_SYNC_PPS function, it can generate pulse use for indication NSA and SA sub6 the beginning frame flag of DL-UL, the pin level is 1.8V.

Recommended reference circuit is shown in the following figure.

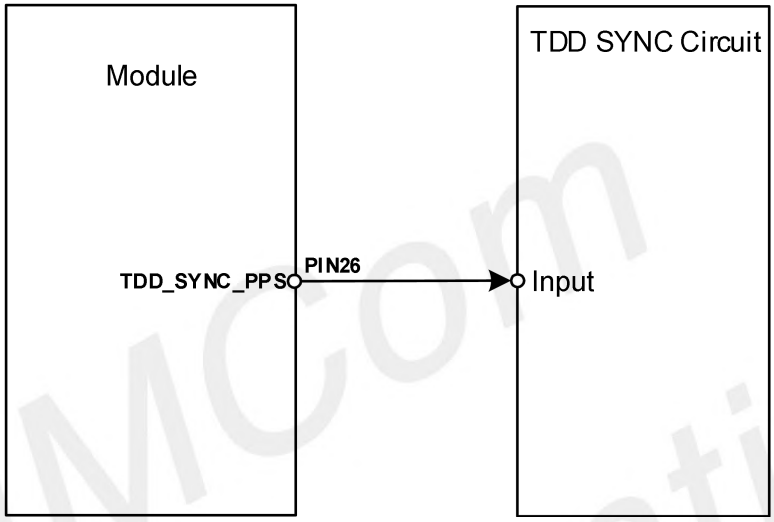

Figure 36: TDD_SYNC_PPS pin reference circuit

Table 44: Definition of TDD_SYNC_PPS pin

Pin name	Pin no.	Electrical description	Description	Comments
TDD_SYNC_PPS	26	DO	It can generate pulse use for indication NSA and SA sub6 TDD the beginning frame flag of DL-UL	1.8V voltage domain

NOTE

1. "*" means under development.
2. The TDD_SYNC_PPS pin also can be configured GPS_1PPS signal output by software, the TDD_SYNC_PPS and GPS_1PPS function can't be used at the same time.
3. About TDD_SYNC_PPS and GPS_1PPS function more detail, please contact SIMCom support teams.

The following is TDD_SYNC_PPS signal design guidelines：

- This signal trace should be treated as a data transmission line, required impedance is 50 Ω.
- This signal trace should as short as possible and cannot exceed 40mm out of the module.
- This signal trace should far away from RF, power and high-speed signals.

SIMCom Confidential

- This signal trace should be protected completely by GND.
- The rising slew rate is no poor than 3ns, falling slew rate is no poor than 5ns, even with default lowest drive strength (2mA) being selected.

3.14.1 W_DISABLE2#*

The W_DISABLE2# pin controls module to disable the GNSS function. When the W_DISABLE2# signal is pulled to low level, the GNSS function would be disabled. Recommended reference circuit is shown in the following figure.

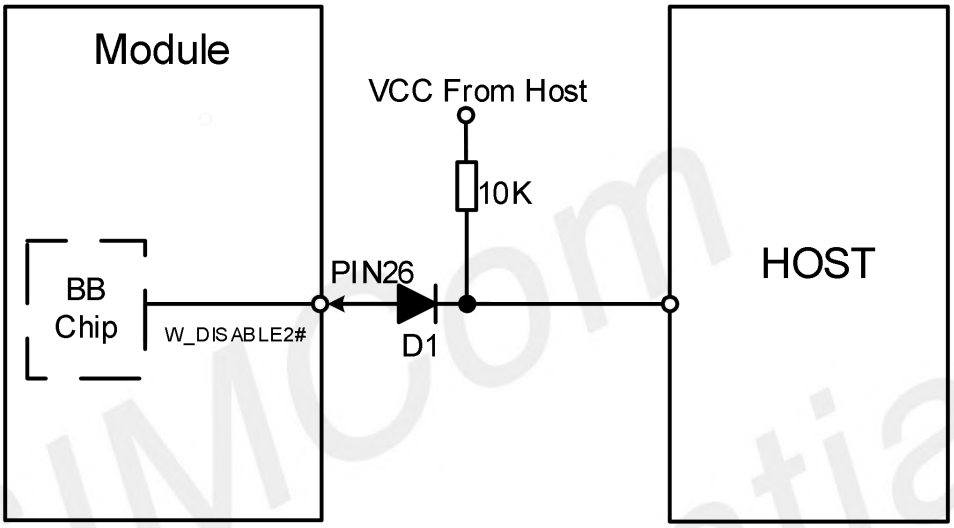

Figure 37: W_DISABLE2# pin reference circuit

Table 45: Definition of W_DISABLE2# pin

Pin name	Pin no.	Electrical description	Description	Comments
W_DISABLE2#	26	DI	GNSS disable Active low	can be driven by either 1.8V or 3.3V GPIO

NOTE

1. The W_DISABLE2# signal is pulled up to 1.8V by software configure in the module.
2. If HOST side control GPIO is 1.8V voltage domain, not need to add D1, If HOST side control GPIO is 3.3V voltage domain, must need to add D1.

Table 46: Recommended D1 list

No.	Manufacturer	Part number	Forward current	Package	Ref. Designator
1	LRC	LDSR01S30ST5G	2A	DFN0603	D1
2	WILL	WSB5557Z	2A	DFN0603	

SIMCom Confidential

Table 47: W_DISABLE2#* pin status

W_DISABLE2# pin status	Module operation
Input Low Level	GNSS function is disabled
Input High Level	AT+CGPS=0: GNSS function is disabled AT+CGPS=1: GNSS function is enabled(default)

NOTE

1. "*" means under development, for details please contact SIMCom support teams.
2. The W_DISABLE2# function can be set by software AT command, if need this function, please contact SIMCom support team.

SIMCom Confidential

3.15 Antenna Control Interface*

ANTCTL[0:4] and RFFE signals are used for tunable antenna control and should be routed to an appropriate antenna control circuitry.

The following table is the definitions for antenna control interfaces

Table 48: Definition of antenna control interface through GPIOs

Pin name	Pin no.	Electrical description	Description	Comments
ANTCTL0	59	DO	Antenna tuner control0	1.8V voltage domain. If unused, please keep open SIM8260C-M2, SIM8262E-M2 and SIM8262A-M2 are be defined as ANTCTL0
	63			SIM8380G-M2 and SIM8380G-M2 are be defined as ANTCTL0
LAA/N79_TX_EN*	59	DO	Active high Coexistence signals of n79 and WIFI signal. When the output power of N79 is too high, output high level to WIFI module to turn off the WIFI 5G LNA.	SIM8380G-M2 and SIM8380G-M2 are defined as output signal and use for protect WIFI module.
	63	DO	Active high Coexistence signals of n79 and WIFI signal. When the output power of N79 is too high, output high level to WIFI module to turn off the WIFI 5G LNA.	SIM8260C-M2，SIM8262E-M2 are defined as output signal and use for protect WIFI module.
		DI	Active high Coexistence signals of LAA and WIFI signal. When WIFI 5G is output power too high, output high level to 5G module to turn off 5G module's LAA LNA.	SIM8262A-M2 are be defined as input signal and use for protect 5G module.
ANTCTL1	61	DO	Antenna tuner control1	1.8V voltage domain. If unused, please keep open
ANTCTL2 (RFFE_SDATA)	58	DO (DIO)	Antenna tuner control2 (Antenna tuner MIPI DATA)	1.8V voltage domain. If unused, please keep open
ANTCTL3 (RFFE_SCLK)	56	DO	Antenna tuner control3 (Antenna tuner MIPI CLK)	1.8V voltage domain. If unused, please keep open
ANTCTL4	22	DO	Antenna tuner control4	1.8V voltage domain. If unused, please keep open

SIMCom Confidential

				Only SIM8262E-M2 is defined as ant tunner control4， not support interrupt

NOTE

1. “*” means under development, for details please contact SIMCom support teams.
2. The RFFE signals are multiplexed with ANTCTL2 and ANTCTL3.

SIMCom Confidential

3.16 UART Interface

Module hardware configure as normal communication UART (AT command) by default. If need coexistence signal function, please contact SIMCom support teams.

Table 49: Definition of UART interface

Pin name	Pin no.	Electrical description	Description	Comments
UART_TX COEX1*	64	DO	Module hardware configures as normal communication UART (AT command) by default	If need coexistence signal function, please contact SIMCom support teams
UART_RX COEX2*	62	DI		

The UART level of module is 1.8V, if need communication with 3.3V serial port level， it recommends to use level shift IC. The following figure shows the reference design circuit of level shift.

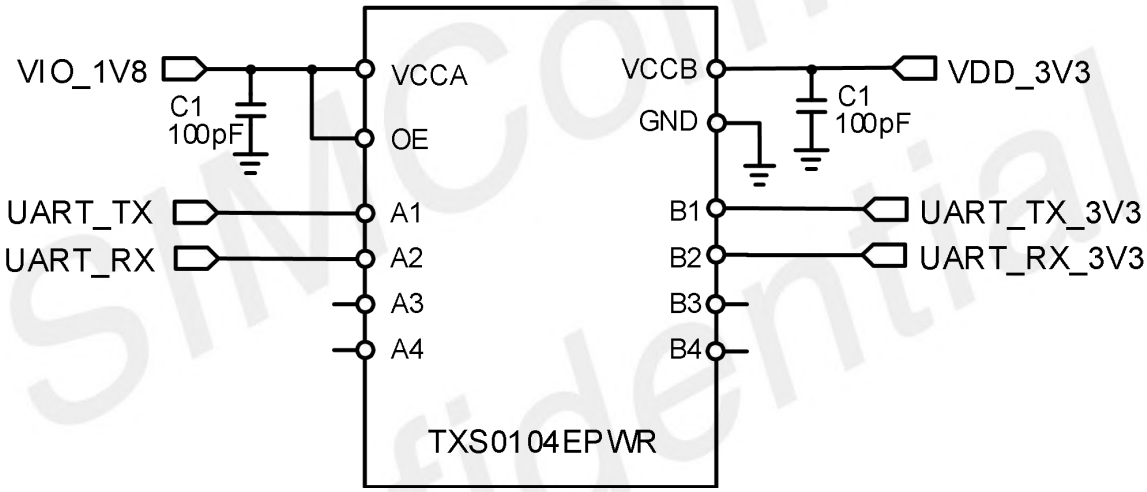

Figure 38: UART level conversion circuit

NOTE

1. If need coexistence signal function, please contact SIMCom support teams.

SIMCom Confidential

3.17 GPIOs Interface

There pins can be configured as GPIO function of module in following table, and it configuration by software configure according to the customer's requirements.

Table 50: GPIO list

Module	Pin no.	Interrupt function	Pull (default options)
UART_TX	64	Y	B-PD: nppukp
UART_RX	62	Y	B-PD: nppukp
I2S_WA[1]	28	Y	B-PD: nppukp
I2S_RX	22	Y	B-PD: nppukp
I2S_TX	24	Y	B-PD: nppukp
I2S_CLK	20	Y	B-PD: nppukp
DPR	25	Y	B-PD: nppukp
I2C_SDA	68	Y	B-PD: nppukp
I2C_SCL	38	Y	B-PD: nppukp
TDD_SYNC_PPS*	26	Y	B-PD: nppukp
I2S_MCLK	60	N	B-PD: nppukp

NOTE

"*" means under development, about TDD_SYNC_PPS function more detail, please contact SIMCom support teams.
1. SIM8262E-M2 has two hardware versions, the one support digital audio interface, and the another one not support digital audio interface, in not support digital audio version, definition of PIN28 & PIN24 & PIN22 as follows:
PIN28 define as DPR2.
PIN24 define as VIO_1P8.
PIN22 define as ANTCTL4, not support interrupt.

3.18 mmW Interface

Only SIM8380G-M2 supports mmW, and its PIN definition is designed on the following pins of the M2 interface.

Table 51: mmW Interface

Pin name	Pin no.	Electrical description	Description
QTM_THERM_DET	61	AI	mmW QTM module thermal detect
VDD_1V9	48	PO	Power supply for mmW QTM VDD
QTM3_PON	44	DO	Power on/reset 3 for mmW QTM module
QTM2_PON	46	DO	Power on/reset 2 for mmW QTM module
QTM1_PON	42	DO	Power on/reset 1 for mmW QTM module
QTM0_PON	40	DO	Power on/reset 0 for mmW QTM module

SIM8380G-M2 support mmW modules are QTM545 and QTM547.
Recommended reference circuit is shown in the following figure.

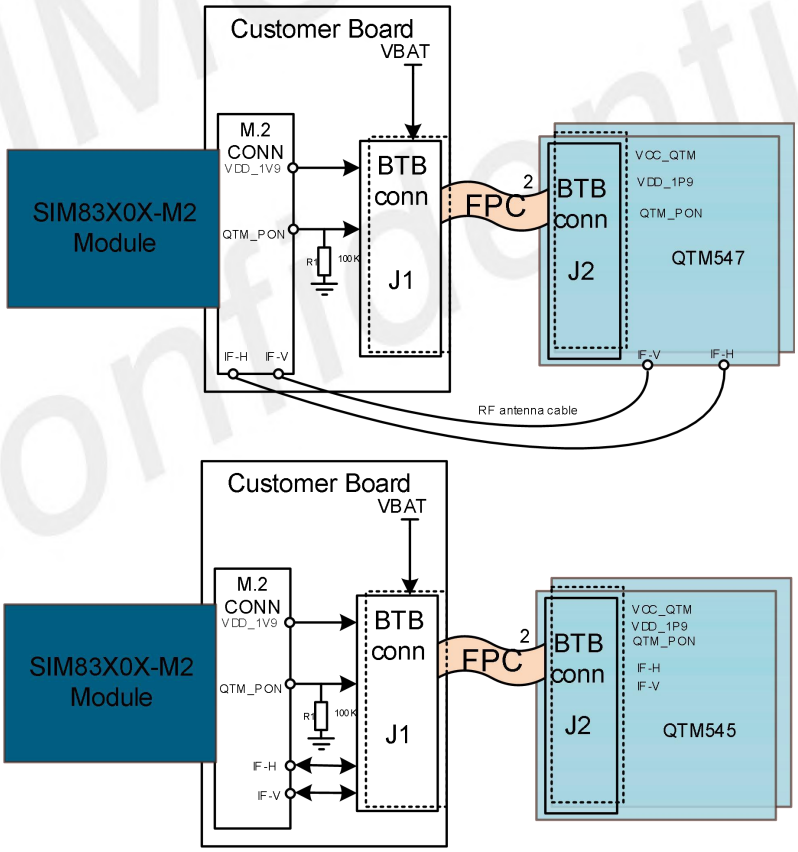

Figure 39: The connection diagram of module and mmW module

NOTE

1. The PIN61 of SIM8380G-M2 define for QTM_THERM_DET.
2. Only QTM547 support QTM_THERM_DET.

3. QTM545 embrace IF intermediate frequency signal, FPC material requirement is high, for more details, please refer SIM83X0 Series_mmWave_QTM545_QTM547_Antenna_Module_Application_Notes_V1.xx document.

Table 52: Recommended mmW module connector list

Name	Manufacturer	Part number	Position number
Connector	Panasonic	AXG3B0612DJ1	Connector on customer PCB board
Connector	Panasonic	AXG4B0612DJ1	Connector on QTM545 module
Connector	IPEX	20981-001E-02	IF ANT RF Connector on PCB board
Connector	IPEX	20980-001R-13	IF ANT RF connectors on the coaxial cable

QTM design guidelines:

Logic design

- A 100PF capacitor needs to be added to the VDD_1P9 power supply of each QTM545 module
- A 22PF and 4.7UF capacitor needs to be added to the VDD_1P9 power supply of each QTM547 module
- 100PF capacitor needs to be added to the VCC_QTM power supply of each QTM545 module
- 100PF and 10UF capacitor needs to be added to the VCC_QTM power supply of each QTM5457module
- If the QTM_PON signal is not used, add a 100 resistor to GND Isolate from noise sources, such as antenna, RF signals, SMPS, clocks, and other high speeding signals.

IF cable isolation recommendation to avoid LTE de-sense in co-existence mode.

- 0.5 GHz – 1.7 GHz: 70 dB
- 1.7 GHz – 3.0 GHz: 60 dB
- 3.0 GHz – 6.0 GHz: 65 dB
- 6.0 GHz – 10 GHz: 65 dB
- 10.0 GHz – 15 GHz: 55 dB

Layout design

- VCC_QTM Maximum allowed DC resistance <=90 (mΩ)
- VDD_1P9 Maximum allowed DC resistance <=150 (mΩ)

SIMCom Confidential

4. Antenna Interfaces

SIM8380G-M2 provide four antenna interfaces, and all of them should be 50Ω impedance controlled for RF signal.

SIM8380G-M2 has four antenna interfaces and four dedicated antennas for mmW.

Table 53: Antenna port definitions

ANT item	ANT function	Frequency range	Functional description
SIM8260G-M2			
ANT0	3G/4G/5G LB/MHB TRX 4G UHB DL-MIMO2 5G n41/n77/n78/n79 UL/DL-MIMO2	617MHz~960MHz 1427MHz~2690MHz 3300MHz~5925Mhz	3G/4G/5G signal transmit and receive
ANT1	3G/4G/5G MHB DL-MIMO1 4G UHB DL-MIMO1 5G n77/n78/n79 DL-MIMO1 5G n41 DIV	1427MHz~2690MHz 3300MHz~5000Mhz	3G/4G/5G signal receive
ANT2	3G/4G/5G MHB DL-MIMO2 4G UHB TRX 5G n41/n77/n78/n79 TRX	1427MHz~2690MHz 3300MHz~5000Mhz	3G/4G/5G signal transmit and receive
ANT3	3G/4G/5G MHB DIV 4G UHB DIV 5G n77/n78/n79 DIV 5G n41 DLMIMO1 GNSS L1	617MHz~960MHz 1427MHz~2690MHz 3300MHz~5925Mhz	3G/4G/5G/GNSS signal receive
SIM8380G-M2			
ANT0	3G/4G/5G LB/MHB TRX 4G UHB DL-MIMO2 5G n41/n77/n78/n79 UL/DL-MIMO2	617MHz~960MHz 1427MHz~2690MHz 3300MHz~5925Mhz	3G/4G/5G signal transmit and receive
ANT1	3G/4G/5G MHB DL-MIMO1 4G UHB DL-MIMO1 5G n77/n78/n79 DL-MIMO1 5G n41 DIV	1427MHz~2690MHz 3300MHz~5000Mhz	3G/4G/5G signal receive
ANT2	3G/4G/5G MHB DL-MIMO2 4G UHB TRX 5G n41/n77/n78/n79 TRX	1427MHz~2690MHz 3300MHz~5000Mhz	3G/4G/5G signal transmit and receive
ANT3	3G/4G/5G MHB DIV 4G UHB DIV 5G n77/n78/n79 DIV 5G n41 DLMIMO1 GNSS L1	617MHz~960MHz 1427MHz~2690MHz 3300MHz~5925Mhz	3G/4G/5G/GNSS signal receive
mmW-V2	IF signal input and output vertical polarization		Cooperate with QTM3_PON to connect a QTM545 antenna module
mmW-H1	IF signal input and output horizontal polarization		

mmW-V4	IF signal input and output vertical polarization		Cooperate with QTM0_PON to connect a QTM545 antenna module
mmW-H3	IF signal input and output horizontal polarization		

NOTE

1.About mmW, the function of QTM547 is being developed, for more detail, please contact SIMCom

Table 54: Frequency band and antenna ports mapping

BANDS FUNCTIONS		ANTENNAS	ANT0	ANT1	ANT2	ANT3	GNSS[3]
SIM8260G-M2							
3G/4G/5G 4G 5G	LB/MHB UHB n41/n77/n78/n79	TRX DL-MIMO2 UL/DL-MIMO2	✓				
3G/4G/5G 4G 5G 5G	MHB UHB n77/n78/n79 n41	DL-MIMO1 DL-MIMO1 DL-MIMO1 DIV		✓			
3G/4G/5G 4G 5G	MHB UHB n41/n77/n78/n79	DL-MIMO2 TRX TRX			✓		
3G/4G/5G 4G 5G 5G GNSS[1]	LB/MHB UHB n77/n78/n79 n41 L1	DIV DIV DIV DL-MIMO1				✓	
SIM8380G-M2							
3G/4G/5G 4G 5G	LB/MHB UHB n41/n77/n78/n79	TRX DL-MIMO2 UL/DL-MIMO2	✓				
3G/4G/5G 4G 5G 5G	MHB UHB n77/n78/n79 n41	DL-MIMO1 DL-MIMO1 DL-MIMO1 DIV		✓			
3G/4G/5G 4G 5G	MHB UHB n41/n77/n78/n79	DL-MIMO2 TRX TRX			✓		
3G/4G/5G 4G 5G 5G GNSS[1]	LB/MHB UHB n77/n78/n79 n41 L1	DIV DIV DIV DL-MIMO1				✓	

NOTE

1. GNSS system is optional.
2. L5 is not support by default, if customer needs to support L5, hardware needs to be customized. For more detail, please contact SIMCom support teams.
3. Only SIM8260C-M2 GNSS support separate antenna, please contact the SIMCom support team for more details.
4. "*" means SIM8380G-M2 and SIM8380G-M2 are under development, only SIM8380G-M2 support mmW. For more detail, please contact SIMCom support teams.
5. DIV means diversity reception, DL_MIMO1 means PRX_MIMO, DL_MIMO2 means DRX_MIMO.

4.1.1 3G/4G/5G/mmW Operating Frequency

Table 55: Module operating frequency

Frequency bands	Uplink (UL)	Downlink (DL)	Duplex Mode
WCDMA B1	1920 ~1980MHz	2110 ~2170MHz	FDD
WCDMA B2	1850 ~1910MHz	1930 ~1990MHz	FDD
WCDMA B4	1710~1755 MHz	2110~2155MHz	FDD
WCDMA B5	824～849MHz	869～894MHz	FDD
WCDMA B8	880 ~915MHz	925 ~960MHz	FDD
WCDMA B19	832 ~842MHz	877 ~887MHz	FDD
LTE B1	1920 ~1980MHz	2110 ~2170MHz	FDD
LTE B2	1850 ~1910MHz	1930 ~1990MHz	FDD
LTE B3	1710 ~1785 MHz	1805 ~1880MHz	FDD
LTE B4	1710~1755 MHz	2110~2155MHz	FDD
LTE B5	824～849 MHz	869～894MHz	FDD
LTE B7	2500~2570MHz	2620~2690MHz	FDD
LTE B8	880 ~915MHz	925 ~960MHz	FDD
LTE B12	698 ~716MHz	728 ~746MHz	FDD
LTE B13	777 ~787MHz	746 ~756MHz	FDD
LTE B14	788 ~798MHz	758 ~768MHz	FDD
LTE B17	704 ~716MHz	734 ~746MHz	FDD
LTE B18	815 ~830MHz	860 ~875MHz	FDD
LTE B19	830 ~845MHz	875 ~890MHz	FDD
LTE B20	832~862MHz	791~ 821MHz	FDD
LTE B25	1850~1915MHz	1930~1995MHz	FDD

LTE B26	814 ~849MHz	859 ~894MHz	FDD
LTE B28	703~748MHz	758~803MHz	FDD
LTE B29	\	717~728MHz	FDD
LTE B30	2305~2315MHz	2350~2360MHz	FDD
LTE B32	\	1452~1496MHz	TDD
LTE B34	2010~2025MHz	2010~2025MHz	TDD
LTE B38	2570 ~2620MHz	2570 ~2620MHz	TDD
LTE B39	1880~1920MHz	1880~1920MHz	TDD
LTE B40	2300 ~2400MHz	2300 ~2400MHz	TDD
LTE B41	2496 ~2690MHz	2496 ~2690MHz	TDD
LTE B42	3400 ~3600MHz	3400 ~3600MHz	TDD
LTE B43	3600 ~3800MHz	3600 ~3800MHz	TDD
LTE B46	\	5150~5925MHz	TDD
LTE B48	3550~3700MHz	3550~3700MHz	TDD
LTE B66	1710~1780MHz	2110~2180MHz	FDD
LTE B71	663 ~698MHz	617 ~652MHz	FDD
5G n1	1920 ~1980MHz	2110 ~2170MHz	FDD
5G n2	1850 ~1910MHz	1930 ~1990MHz	FDD
5G n3	1710 ~1785MHz	1805 ~1880MHz	FDD
5G n5	824～849 MHz	869～894MHz	FDD
5G n7	2500~2570MHz	2620~2690MHz	FDD
5G n8	880 ~915MHz	925 ~960MHz	FDD
5G n12	699 ~716MHz	729 ~746MHz	FDD
5G n13	746 ~756MHz	777 ~787MHz	FDD
5G n14	758 ~768MHz	788 ~798MHz	FDD
5G n18	815 ~830MHz	860 ~875MHz	FDD
5G n20	832~862MHz	791~ 821MHz	FDD
5G n25	1850 ~1915MHz	1930 ~1995MHz	FDD
5G n26	814 ~849MHz	859 ~894MHz	FDD
5G n28	703~748MHz	758~803MHz	FDD
5G n30	2305 ~2315 MHz	2350 ~2360 MHz	FDD
5G n38	2570 ~2620MHz	2570 ~2620MHz	TDD
5G n40	2300 ~2400MHz	2300 ~2400MHz	TDD
5G n41	2496~2690MHz	2496~2690MHz	TDD
5G n48	3550 ~3700MHz	3550 ~3700MHz	FDD
5G n66	1710~1780MHz	2110~2180MHz	TDD
5G n71	663 ~698 MHz	617 ~652 MHz	FDD
5G n75	\	1432~1517MHz	FDD
5G n76	\	1427~1432MHz	FDD
5G n77	3300~4200MHz	3300~4200MHz	TDD
5G n78	3300~3800MHz	3300~3800MHz	TDD

SIMCom Confidential

5G n79	4400~5000MHz	4400~5000MHz	TDD
mmW n257	26500~29500MHz	26500~29500MHz	TDD
mmW n258	24250~27500MHz	24250~27500MHz	TDD
mmW n260	39500~43500MHz	39500~43500MHz	TDD
mmW n261	37000~40000MHz	37000~40000MHz	TDD

SIMCom Confidential

4.1.2 GNSS Frequency

The following table shows frequency specifications of GNSS antenna interface.

Table 56: GNSS frequency

Type	Frequency
GPS L1/Galileo/QZSS	1575.42±1.023MHz
GPS L5	1176.45±10.23MHz
GLONASS	1597.5~1605.8MHz
BeiDou/Compass	1561.098±2.046MHz

SIMCom Confidential

4.2 Antenna Installation

4.2.1 Antenna Requirements

The following table shows the requirements on 3G/4G/5G antennas and GNSS antenna.

Table 57: 3G/4G/5G/GNSS antennas

Parameter	Requirement
Operating Frequency	See Table 53, 54 for each antenna
Direction	Omni Directional
Gain	> -3dBi (Avg)
Impedance	50 Ω
Efficiency	> 50 %
Max. Input Power	50W
VSWR	< 2
Isolation	20dB is preferred
Cable Insertion Loss <1GHz	<1dB
Cable Insertion Loss 1GHz~2.2GHz	<1.5dB
Cable Insertion Loss 2.3GHz~2.7GHz	<2dB
Cable Insertion Loss 3.3GHz~6GHz	<2.5dB

Table 58: GNSS antenna (for dedicated GNSS antenna only) *

Parameter	Requirement
Operating Frequency	L1: 1559~1609MHZ L5: 1166~1187MHz
Direction	Hemisphere, face to sky
Antenna Gain	> 2 dB_{ic}
Impedance	50 Ω
Efficiency	> 50 %
Max. Input Power	50W
VSWR	< 2
Polarization	RHCP or Linear
Noise Figure for Active Antenna	< 1.5
Total Gain for Active Antenna	< 17 dB
Cable Insertion Loss	<1.5dB

NOTE

1. "*" means these recommendations are for dedicated GNSS antenna which the application need best of class GNSS tracking performance.

4.2.2 RF Plug Recommendation

SIM826XX/SIM8X80-M2 is mounted with I-PEX's receptacle RF connectors 20449-001E-03, which size is 2.0mm*2.0mm*0.6mm. The connector dimensions are shown as below.

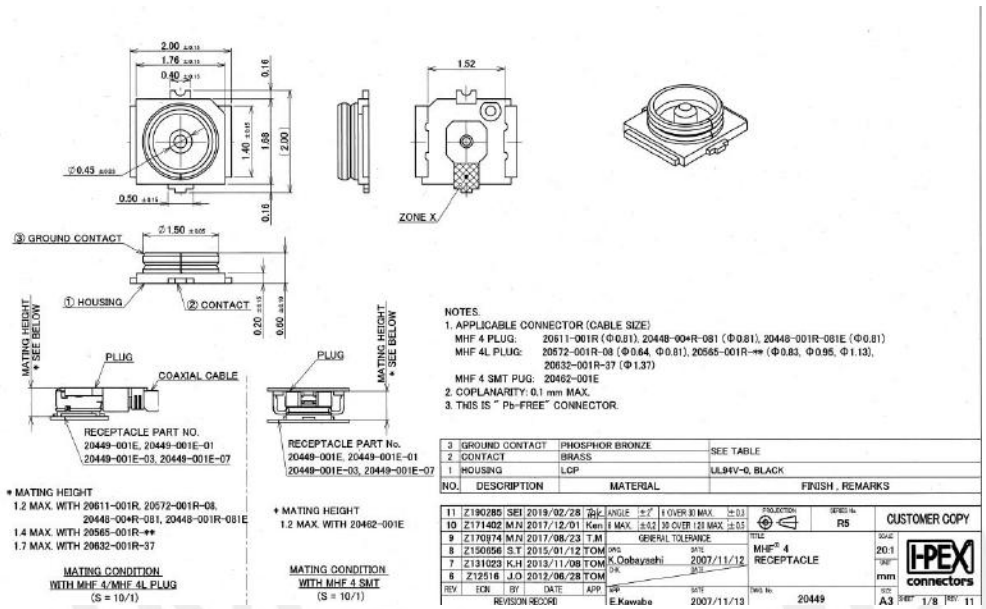

Figure 41: 3D view of 20449-001E-03

The following table shows the RF connector's electrical specifications.

Table 59: Electrical Specifications of 20449-001E-03

Item	Specification
Voltage Rating	60V r.m.s. maximum
Nominal Frequency Range	DC to 6GHz
Nominal Impedance	50Ω
Temperature Rating	-40°C to +90°C
Insulation Resistance	500 MΩ minimum
Withstanding Voltage	No evidence of breakdown
Initial Contact Resistance (Without conductor resistance)	Center contact 20.0mΩmax. Outer contact 20.0mΩmax.
Voltage Standing Wave Ratio (V.S.W.R.)	Meet the requirements of 1.3max. (DC~3GHz) 1.45max.(3GHz~6GHz)

To get best RF performance, the RF plug connector should be designed to match the receptacle 20449-001E-03, and the parts come from I-PEX is the recommended.
The following is the mechanical information of the Murata's RF coaxial cable MXHJD3HJ1000 for reference.
For further technical support, the customer could visit the Murata's website（www.murata.com）or contact the local sales team.

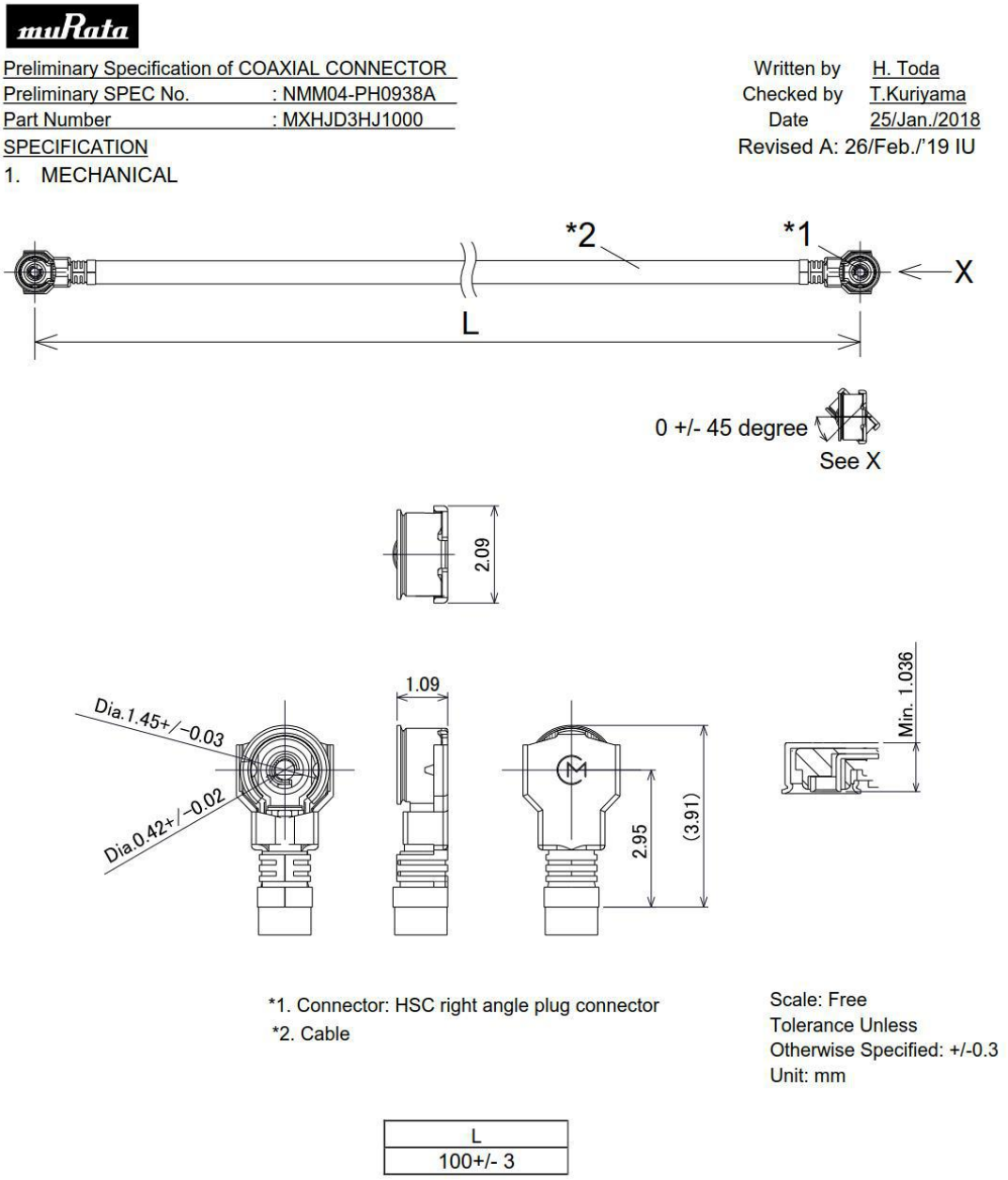

Figure 42: 3D view of MXHJD3HJ1000

4.2.3 RF Cable Assembly Operation

RF cables correct pull and push operation as shown in the following figure.

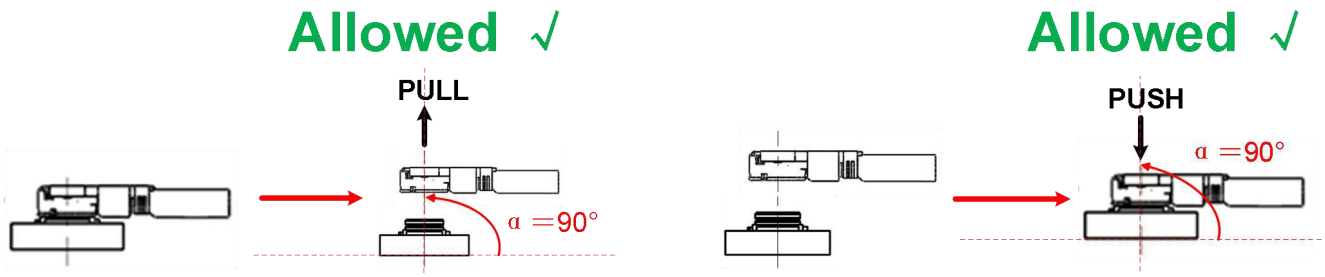

Figure 43: RF cable correct pull and push operation

RF cables error pull and push operation as shown in the following figure.

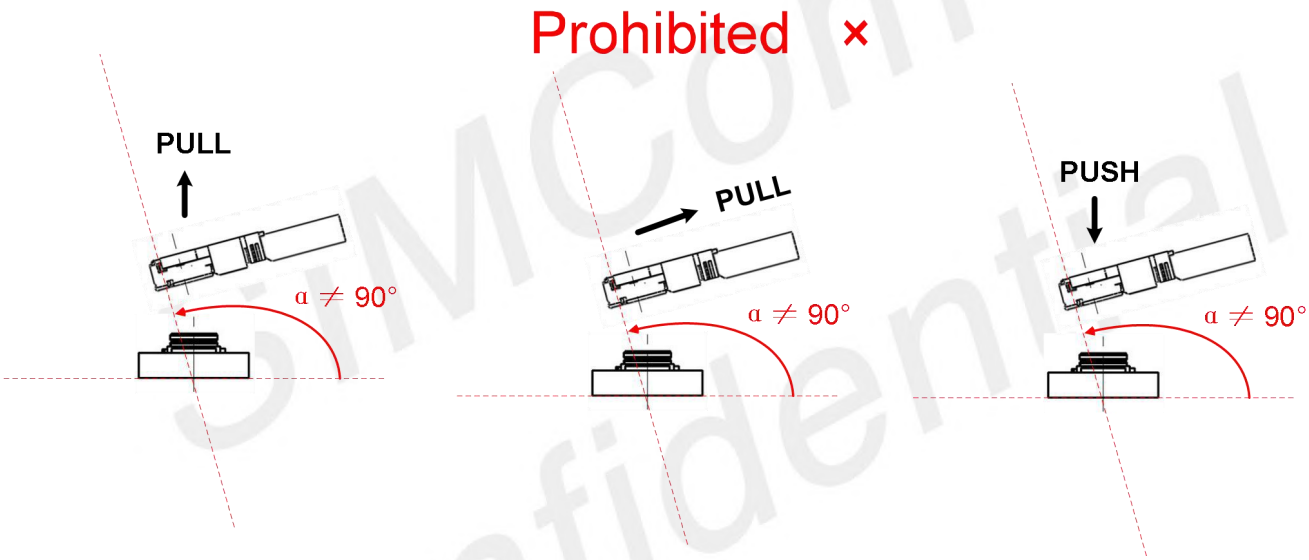

Figure 44: RF cable error pull and push operation

SIMCom Confidential

Use RF cable tool correct pull and push operation as shown in the following figure, for more details, please visit *https://www.i-pex.com*.

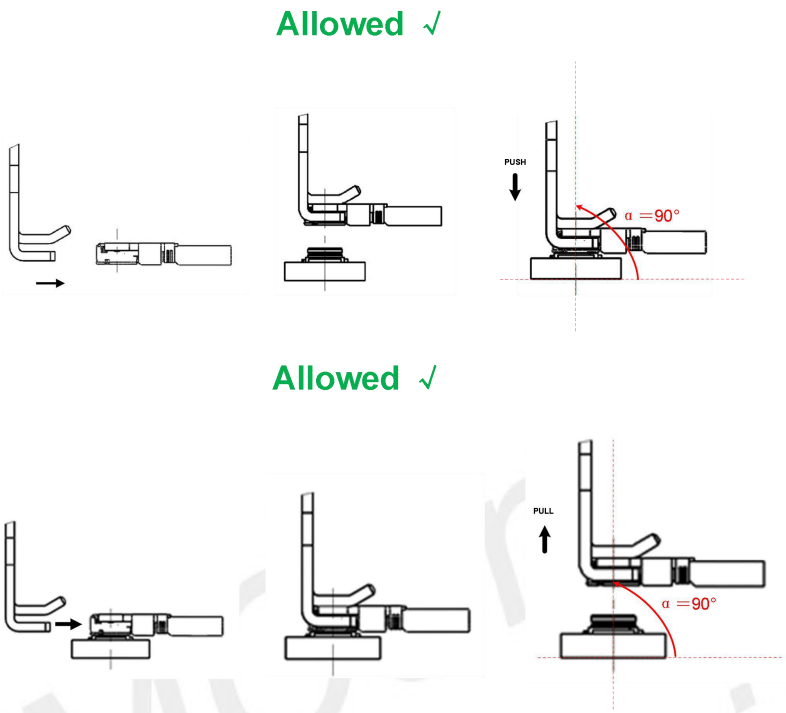

Figure 45: Use RF cable tool correct pull and push operation

Use RF cable tool correct pull and push operation as shown in the following figure, for more details, please visit *https://www.i-pex.com*.

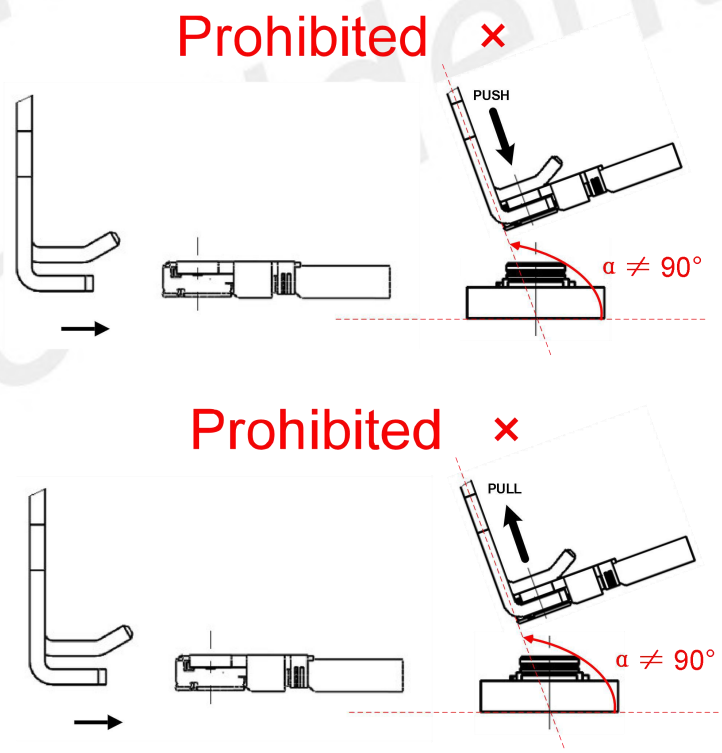

Figure 46: Use RF cable tool error pull and push operation

5. Electrical Specifications

5.1 Absolute Maximum Ratings

Absolute maximum rating for digital and analog pins of module are listed in the following table.

Table 60: Absolute maximum ratings

Parameter	Min.	Typ.	Max.	Unit
Voltage at VBAT pins	-	-	4.8	V
Voltage at digital pins (GPIO, I2C, UART, I2S)	-	-	2.1	V
Voltage at digital pins ((U)SIM)	-	-	3.05	V
Voltage at FULL_CARD_POWER_OFF#	-	-	4.5	V
Voltage at RESET#	-	-	1.9	V

SIMCom Confidential

5.2 Operating Conditions

Table 61: VBAT recommended operating ratings

Parameter	Min.	Typ.	Max.	Unit
Voltage at VBAT	3.135	3.8	4.4	V

Table 62: 1.8V Digital I/O characteristics

Parameter	Description	Min.	Typ.	Max.	Unit
V_{IH}	High-level input voltage	1.17	-	2.1	V
V_{IL}	Low-level input voltage	0	-	0.63	V
V_{OH}	High-level output voltage	1.35	-	1.8	V
V_{OL}	Low-level output voltage	0	-	0.45	V
I_{OZH}	High-level, tri-state leakage current (No pull-down resistor)	-	-	1	uA
I_{OZL}	Low-level, tri-state leakage current (No pull-up resistor)	-1	-	-	uA
I_{IH}	Input high leakage current (No pull-down resistor)	-	-	1	uA
I_{IL}	Input low leakage current (No pull-up resistor)	-1	-	-	uA

Table 63: Operating temperature

Parameter	Min.	Typ.	Max.	Unit
Normal operation temperature (3GPP compliant)	-30	-	70	℃
Extended operation temperature*	-40	-	85	℃
Storage temperature	-40	-	90	℃

NOTE

1.“*”means the module is able to establish and maintain voice, data transmission, SMS and emergency call, etc. The performance may deviate slightly from the 3GPP specifications and will meet 3GPP specifications again when the temperature returns to normal operating temperature levels. If the module works at an environment higher than 70°C, thermal dissipation measure must be taken, and ensure that the temperature of the module CPU is not higher than 100 °C.

SIMCom Confidential

5.3 Operating Mode

5.3.1 Operating Mode Definition

The table below summarizes the various operating modes of SIM826XX/SIM8X80-M2.

Table 64: Operating mode definition

Mode		Function
Normal operation	UMTS/LTE/5G Sleep	AT command “AT+CSCLK=1” can be used to set the module to a sleep mode. In this case, the current consumption of module will be reduced to a very low level and the module can still receive paging message and SMS
	UMTS/LTE/5G Idle	Software is active. Module is registered to the network, and ready to communicate
	UMTS/LTE/5G Talk	Connection between two subscribers is in progress. In this case, the power consumption depends on network settings such as DTX off/on, FR/EFR/HR, hopping sequences, and antennas
	UMTS/LTE/5G Standby	Module is ready for data transmission, but no data is currently sent or received. In this case, power consumption depends on network settings.
	UMTS/LTE/5G Data transmission	There is data transmission in progress. In this case, power consumption is related to network settings (e.g., power control level); uplink/downlink data rates, etc.
Minimum functionality mode		AT command “AT+CFUN=0” can be used to set the module to a minimum functionality mode without removing the power supply. In this mode, the RF part of the module will not work and the (U)SIM card will not be accessible, but USB port are still accessible. The power consumption in this mode is lower than normal mode
Flight mode		AT command “AT+CFUN=4” or pulling down the W_DISABLE1# pin can be used to set the module to flight mode without removing the power supply. In this case, the RF part of the module will not work, but the serial port and USB are still available. The power consumption is lower than normal mode
Minimum power consumption mode		In AT+CFUN=0 condition, send AT+CSCLK=1, the module enter minimum power consumption mode.
Power off		Normally module will go into power off mode by sending the AT command “AT+CPOF” or pull down the FULL_CARD_POWER_OFF# pin. In this mode the power management unit shuts down the power supply, and software is not active. The serial port and USB are not available

5.3.2 Sleep Mode

In sleep mode, the current consumption of the module will be reduced to a very low level.

Several hardware and software conditions must be satisfied in order to let module enter into sleep mode:

1. UART condition

2. USB condition
3. Software condition

NOTE

1. Before designing, pay attention to how to realize sleeping/waking function.

5.3.3 Minimum Functionality Mode and Flight Mode

Minimum functionality mode ceases a majority of functions of the module, in order to minimize the power consumption. This mode is set by the AT command which provides a choice of 3 different functionality levels.

- AT+CFUN=0: Minimum functionality
- AT+CFUN=1: Full functionality (Default)
- AT+CFUN=4: Flight mode

If module has been set to minimum functionality mode, the RF (U)SIM card functions will be closed while USB are still available.
If module has been set to flight mode, the RF function will be closed while the (U)SIM card, the serial port and USB are still available.
When module is in minimum functionality or flight mode, it can return to full functionality by the AT command “AT+CFUN=1”.

SIMCom Confidential

5.4 Current Consumption

The current consumptions are listed in the table below.

Table 65: Module Current consumption on VBAT pins (VBAT=3.8V)

Description	Condition	Typical	Max
Power off mode	Power off	128uA	150 uA
GNSS mode (AT+CSCLK=1 & AT+CFUN=0 & Without USB connection)	AT+CGPS=1(DPO mode)	22 mA	25 mA
Minimum power consumption mode (GNSS off & AT+CSCLK = 1 & Without USB connection)	AT+CFUN=0	3.6mA	5.3 mA
Sleep mode (GNSS off & AT+CSCLK = 1 & Without USB connection)	WCDMA DRX=1.28s	4.7mA	6.5 mA
	WCDMA DRX=2.56s	4.6mA	6 mA
	LTE-FDD DRX=0.32s	7.1mA	12.2 mA
	LTE-FDD DRX=0.64s	5.5mA	8.5 mA
	LTE-FDD DRX=1.28s	4.7mA	6.7 mA
	LTE-FDD DRX=2.56s	4.2mA	6.1 mA
	LTE-TDD DRX=0.32s	7.1mA	12.2 mA
	LTE-TDD DRX=0.64s	5.6mA	8.5 mA
	LTE-TDD DRX=1.28s	4.6mA	6.4 mA
	LTE-TDD DRX=2.56s	4.3mA	6.1 mA
	5G-N78 DRX=0.64s	7mA	13.5 mA
	5G-N78 DRX=1.28s	5.5mA	9 mA
Idle mode (GNSS off & connection USB)	WCDMA	44.62 mA	50 mA
	LTE FDD	45.22 mA	50 mA
	LTE TDD	45.29 mA	50 mA
	5G NR SA	46.07 mA	50 mA
Idle mode (GNSS off & Without connection USB)	WCDMA	5.1mA	28 mA
	LTE FDD	5.7mA	28 mA
	LTE TDD	5.7mA	28 mA
	5G NR SA	8mA	28 mA

SIM8260G /SIM8380G-M2 RF Current consumption

HSDPA data	
WCDMA B1	@Power 23.1dBm Typical: 870mA
WCDMA B2	@Power 23.2dBm Typical: 900mA
WCDMA B4	@Power 23.1dBm Typical: 905mA
WCDMA B5	@Power 24.1dBm Typical: 580mA
WCDMA B8	@Power 24.2dBm Typical: 615mA

WCDMA B19	@Power 24.2dBm Typical: 575mA		
LTE data			
LTE-FDD B1	@5MHz	23.2dBm	Typical : 890mA
	@10MHz	23.1dBm	Typical : 900mA
	@20MHz	22.9dBm	Typical : 1020mA
LTE-FDD B2	@5MHz	23.1dBm	Typical : 930mA
	@10MHz	23.2dBm	Typical : 910mA
	@20MHz	23.1dBm	Typical : 920mA
LTE-FDD B3	@5MHz	23.1dBm	Typical : 930mA
	@10MHz	23.1dBm	Typical : 860mA
	@20MHz	23.1dBm	Typical : 900mA
LTE-FDD B4	@5MHz	23.1dBm	Typical : 930mA
	@10MHz	23.1dBm	Typical : 940mA
	@20MHz	22.9dBm	Typical : 950mA
LTE-FDD B5	@5MHz	22.9dBm	Typical : 540mA
	@10MHz	22.9dBm	Typical : 535mA
LTE-FDD B7	@5MHz	23.2dBm	Typical : 935mA
	@10MHz	23.2dBm	Typical : 880mA
	@20MHz	22.9dBm	Typical : 830mA
LTE-FDD B8	@5MHz	23.0dBm	Typical : 590mA
	@10MHz	23.1dBm	Typical : 550mA
LTE-FDD B12	@5MHz	23.0dBm	Typical : 460mA
	@10MHz	23.2dBm	Typical : 465mA
LTE-FDD B13	@5MHz	23.0dBm	Typical : 450mA
	@10MHz	23.1dBm	Typical : 450mA
LTE-FDD B14	@5MHz	23.1dBm	Typical : 460mA
	@10MHz	23.2dBm	Typical : 455mA
LTE-FDD B17	@5MHz	23.1dBm	Typical : 460mA
	@10MHz	23.2dBm	Typical : 465mA
LTE-FDD B18	@5MHz	22.9dBm	Typical : 510mA
	@10MHz	23.0dBm	Typical : 500mA
LTE-FDD B19	@5MHz	23.2dBm	Typical : 510mA
	@10MHz	23.0dBm	Typical : 505mA
LTE-FDD B20	@5MHz	23.1dBm	Typical : 540mA
	@10MHz	23.1dBm	Typical : 540mA
	@20MHz	22.8dBm	Typical : 525mA
LTE-FDD B25	@5MHz	23.2dBm	Typical : 930mA
	@10MHz	23.3dBm	Typical : 940mA
	@20MHz	23.1dBm	Typical : 915mA
LTE-FDD B26	@5MHz	23.0dBm	Typical : 550mA
	@10MHz	23.1dBm	Typical : 540mA
LTE-FDD B28	@5MHz	23.3dBm	Typical : 540mA
	@10MHz	23.3dBm	Typical : 530mA
	@20MHz	23.0dBm	Typical : 525mA
LTE-FDD B30	@5MHz	23.1dBm	Typical : 750mA
	@10MHz	23.2dBm	Typical : 750mA
LTE-TDD B34	@5MHz	23.0dBm	Typical : 390mA
	@10MHz	23.1dBm	Typical : 390mA
LTE-TDD B38	@5MHz	23.0dBm	Typical : 390mA
	@10MHz	23.0dBm	Typical : 390mA
	@20MHz	22.9dBm	Typical : 390mA
LTE-TDD B39	@5MHz	23.1dBm	Typical : 380mA
	@10MHz	23.2dBm	Typical : 380mA
	@20MHz	23.0dBm	Typical : 385mA
LTE-TDD B40	@5MHz	23.2dBm	Typical : 470mA
	@10MHz	23.2dBm	Typical : 480mA

Confidential

	@20MHz	23.1dBm	Typical : 480mA
LTE-TDD B41	@5MHz	23.2dBm	Typical : 480mA
	@10MHz	23.2dBm	Typical : 480mA
	@20MHz	23.1dBm	Typical : 480mA
LTE-TDD B42	@5MHz	23.2dBm	Typical : 330mA
	@10MHz	23.2dBm	Typical : 325mA
	@20MHz	23.0dBm	Typical : 330mA
LTE-TDD B43	@5MHz	23.6dBm	Typical : 320mA
	@10MHz	23.6dBm	Typical : 320mA
	@20MHz	23.4dBm	Typical : 320mA
LTE-TDD B48	@5MHz	23.4dBm	Typical : 540mA
	@10MHz	23.4dBm	Typical : 550mA
	@20MHz	23.2dBm	Typical : 542mA
LTE-FDD B66	@5MHz	23.1dBm	Typical : 950mA
	@10MHz	23.2dBm	Typical : 970mA
	@20MHz	23.1dBm	Typical : 980mA
LTE-FDD B71	@5MHz	23.0dBm	Typical : 588mA
	@10MHz	23.1dBm	Typical : 565mA
	@20MHz	23.0dBm	Typical : 530mA
5G NR data			
5G n1	@Power	23.4dBm	Typical: 1300mA
5G n2	@Power	22.6dBm	Typical: 1265mA
5G n3	@Power	22.7dBm	Typical: 1262mA
5G n5	@Power	23.2dBm	Typical: 586mA
5G n7	@Power	23.1dBm	Typical: 980mA
5G n8	@Power	23.2dBm	Typical: 625mA
5G n12	@Power	22.7dBm	Typical: 545mA
5G n13	@Power	22.5dBm	Typical: 485mA
5G n14	@Power	23.0dBm	Typical: 470mA
5G n18	@Power	23.0dBm	Typical: 530mA
5G n20	@Power	22.9dBm	Typical: 590mA
5G n25	@Power	23.4dBm	Typical: 1265mA
5G n26	@Power	23.0dBm	Typical: 560mA
5G n28	@Power	22.9dBm	Typical: 630mA
5G n30	@Power	23.6dBm	Typical: 940mA
5G n38	@Power	23.4dBm	Typical: 430mA
5G n40	@Power	23.2dBm	Typical: 455mA
5G n41	@Power	26.7dBm	Typical: 1400mA
5G n48	@Power	23.6dBm	Typical: 630mA
5G n66	@Power	23.2dBm	Typical: 1155mA
5G n71	@Power	23.1dBm	Typical: 570mA
5G n77	@Power	26.1dBm	Typical: 850mA
5G n78	@Power	26.1dBm	Typical: 850mA
5G n79	@Power	25.8dBm	Typical: 850mA
5G n257	@Power	31dBm	Typical: 1248mA
5G n258	@Power	30dBm	Typical: 1164mA

SIMCom Confidential

5G n260	@Power	30dBm	Typical: 1070mA
5G n261	@Power	32dBm	Typical: 1070mA

NOTE

1.Only SIM8380G-M2 support mmW，for more detail, please contact SIMCom support teams.

SIMCom Confidential

5.5 RF Output Power

The RF output power is shown in the following table.

Table 66: Conducted output power

Bands	Max	Min
WCDMA Bands	23dBm + 1/-3dB	< -50dBm
LTE-FDD Bands	23dBm + 2/-2dB	< -40dBm
LTE-TDD Bands	23dBm + 2/-2dB	< -40dBm
5G Sub-6 Bands(PC3)	23dBm + 2/-2dB	< -40dBm
5G Sub-6 Bands (n41 n77 n78 n79PC2)	26dBm + 2/-2dB	< -40dBm
mmW Bands	TBD	TBD

SIMCom Confidential

5.6 Conducted Receive Sensitivity

The conducted RF receiving sensitivity is shown in the following table.

Table 67: Conducted RF receiving sensitivity

SIM8260G-M2 /SIM8380G-M2 receiving sensitivity			
WCDMA B1	-111dbm	-113.5dbm	\
WCDMA B2	-111dbm	-113.5dbm	\
WCDMA B4	-111dbm	-113dbm	\
WCDMA B5	-112dbm	-114.5dbm	\
WCDMA B8	-111dbm	-114.5dbm	\
WCDMA B19	-111dbm	-113.5dbm	
LTE B1(10M)	-98.9dbm	-100.8dbm	-104.8dbm
LTE B2(10M)	-99.3dbm	-101dbm	-105.3dbm
LTE B3(10M)	-98.6dbm	-100dbm	-104.3dbm
LTE B4(10M)	-99.4dbm	-101dbm	-105.1dbm
LTE B5(10M)	-100.2dbm	-102.5dbm	\
LTE B7(10M)	-98.8dbm	-101.5dbm	-104.5dbm
LTE B8(10M)	-99.6dbm	-101.4dbm	\
LTE B12(10M)	-100dbm	-103dbm	\
LTE B13(10M)	-100.4dbm	-103dbm	\
LTE B14(10M)	-100.2dbm	-103dbm	\
LTE B17(10M)	-100dbm	-103dbm	\
LTE B18(10M)	-99.7dbm	-103dbm	\
LTE B19(10M)	-100.1dbm	-103.4dbm	\
LTE B20(10M)	-100.2dbm	-103.6dbm	\
LTE B25(10M)	-99.1dbm	-101dbm	-104.9dbm
LTE B26(10M)	-99.96dbm	-103.3dbm	\
LTE B28(10M)	-99.6dbm	-103.3dbm	\
LTE B30(10M)	-96.4dbm	-100dbm	-104.1dbm
LTE B34(10M)	-99.7dbm	-101.7dbm	\
LTE B38(10M)	-97.9dbm	-101.3dbm	-104.4dbm
LTE B39(10M)	-99.7dbm	-101.2dbm	-105.4dbm
LTE B40(10M)	-99dbm	-101.4dbm	-104.2dbm
LTE B41(10M)	-97.9dbm	-103.6dbm	-104.8dbm
LTE B42(10M)	-99.7dbm	-102.1dbm	-105.3dbm
LTE B43(10M)	-99.7dbm	-102.2dbm	-105.2dbm
LTE B48(10M)	-99.6dbm	-102.4dbm	-105.3dbm

SIMCom Confidential

LTE B66(10M)	-99.3dbm	-101.8dbm	-104.8dbm
LTE B71(10M)	-100.1dbm	-103.5dbm	\
5G n1(10M)	-98.8dbm	-101.6dbm	-104.8dbm
5G n2(10M)	-98.1dbm	-101.7dbm	-105.1dbm
5G n3(10M)	-98.6dbm	-101.1dbm	-104.6dbm
5G n5(10M)	-100.5dbm	-103dbm	\
5G n7(10M)	-98.5dbm	-101.1dbm	-104.5dbm
5G n8(10M)	-99.5dbm	-102.9dbm	\
5G n12(10M)	-100.5dbm	-102.8dbm	\
5G n13(10M)	-99dbm	-102.5dbm	\
5G n14(10M)	-97.8dbm	-102.5dbm	\
5G n18(10M)	-100.2dbm	-103dbm	\
5G n20(10M)	-100dbm	-103.2dbm	\
5G n25(10M)	-98.9dbm	-101.3dbm	-104.9dbm
5G n26(10M)	-99.5dbm	-103.2dbm	\
5G n28(10M)	-99.6dbm	-103.3dbm	\
5G n30(10M)	-95dbm	-99.6dbm	-104.5dbm
5G n38(10M)	-97.6dbm	-101.5dbm	-105.2dbm
5G n40(10M)	-98.1dbm	-101.8dbm	-104.9dbm
5G n48(10M)	-99.6dbm	-101.7dbm	-106.1dbm
5G n66(10M)	-98.3dbm	-101.8dbm	-105.1dbm
5G n71(10M)	-100.5dbm	-103.1dbm	\
5G n41(100M)	-87dbm	-90.8dbm	-92.8dbm
5G n77(100M)	-89.1dbm	-91.5dbm	-93.2dbm
5G n78(100M)	-89.6dbm	-91.6dbm	-93.4dbm
5G n79(100M)	-89.1dbm	-91.4dbm	-93.3dbm
mmW n257	TBD	TBD	TBD
mmW n258	TBD	TBD	TBD
mmW n260	TBD	TBD	TBD
mmW n261	TBD	TBD	TBD

SIMCom Confidential

5.7 Thermal Design

Make sure that the module can reach maximum work performance under extended temperature or extreme conditions for a long time, thermal dissipation design is very important.

Module reserved a ground plane on the bottom side for the heat dissipating, customer could conduct the heat to the large board by the silica gel, for better thermal performance, customer could use a heat sink device to conduct the heat to the air.

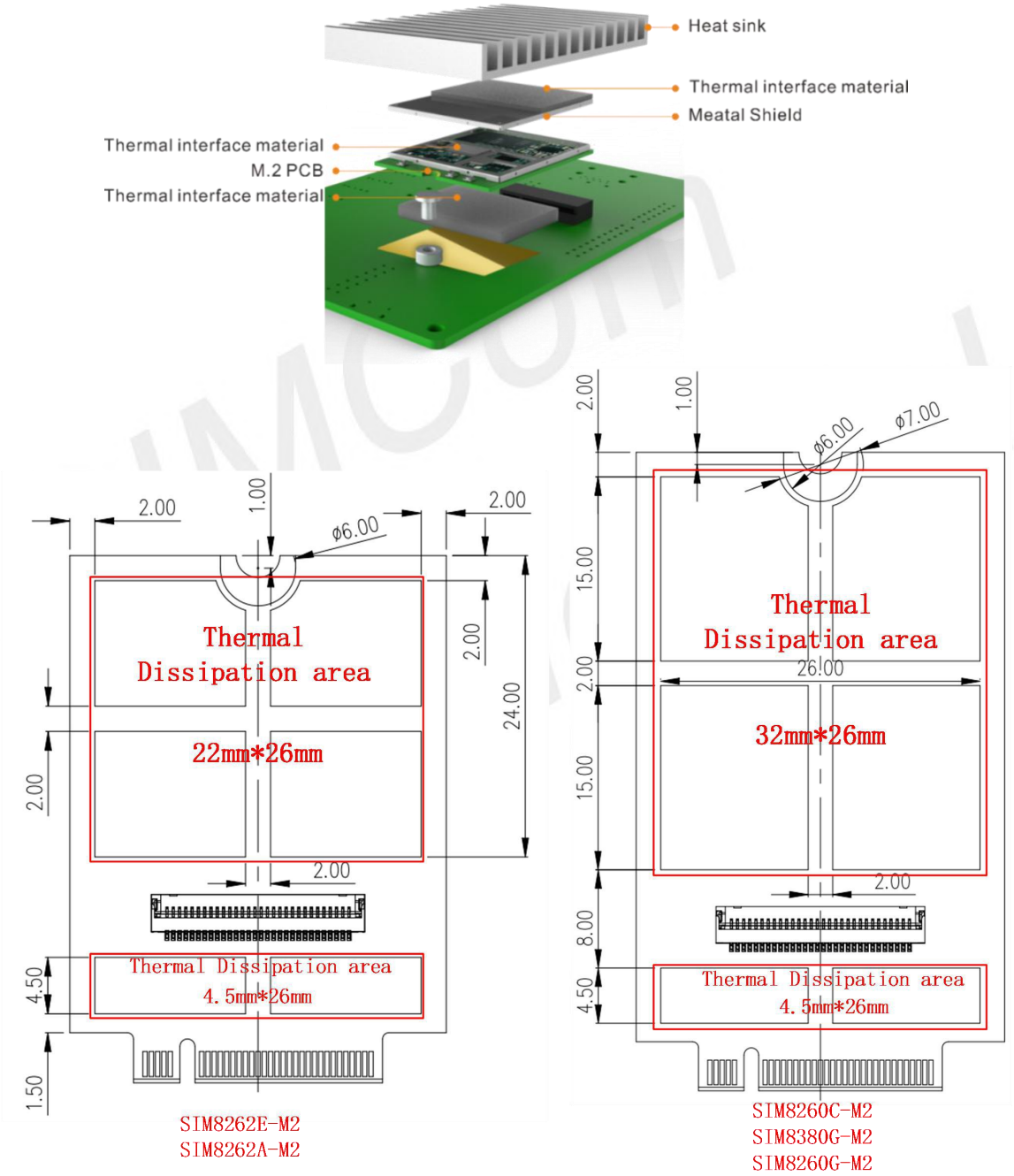

Figure 47: Thermal design diagram

There are some design rules to enhance thermal dissipation performance:

- Keep the module away from other heat sources such as battery, power, AP, etc.
- Make sure that the module mounting holes connect to the main PCB ground fully.
- Add enough through via on the main PCB. Via material is very important solid copper and stacked via is better.

- Make sure maximize airflow around the module.
- Recommend use heat dissipation material connect to the customer's devices on the top side of the module to enhance the heat dissipation. Large thermal dissipation area is better.
- Chose a high effective heat dissipation material is better such as heat pipe, graphite sheets. The recommend thermal conductivity is 8w/m-k.

NOTE

1. On customer main PCB, the size of exposed copper thermal dissipation area and exposed copper thermal dissipation area of module should be consistent, for more details, please refer to chapter2.3.

Table 68: Chip junction temperature table

Chip model	Junction temperature
JSFCCA5QHAFGA-405A	85℃
PMK65	125℃
PMX65	125℃
SDX65/SDX62	105℃
QET7100	115℃
QPM6679	85℃
QPM6375	85℃
QPM6621	85℃
S55643-11	85℃
SDR735	105℃
SMR546	105℃
QTM545	85℃
QTM547	105℃

5.8 ESD

Module is sensitive to ESD in the process of storage, transporting, and assembling. When module is mounted on the customer's main board, the ESD components should be placed closed to the connectors which human body may touch, such as (U)SIM card holder, audio jacks, switches, USB interface, etc. The following table shows the module ESD test performance.

In main PCB board, the post of screws and screws used to fix the M2 module should have good electrical conductivity and facilitate ESD release to better protect the module.

Table 69: The ESD performance measurement table (Temperature: 25℃, Humidity: 45%)

Part	Contact discharge	Air discharge
VBAT, GND	+/- 4KV	+/- 8KV
Antenna	+/- 4KV	+/- 8KV
FULL_CARD_POWER_OFF#	+/- 3KV	+/- 6KV
USB	+/- 3KV	+/- 6KV
RESET#	+/- 2KV	+/- 5KV
(U)SIM	+/- 2KV	+/- 5KV
Other PAD	+/- 2KV	+/- 5KV

NOTE

Test conditions:
1. The external of the module has surge protection diodes and ESD protection diodes.
2. The data in the table above was tested using SIMCom EVB.

SIMCom Confidential

SIMCom Confidential

Table 70: Label description of the module information

No.	Description
A	LOGO
B	Project name
C	Product code
D	QR code
E	Serial number
F	International mobile equipment identity
G	Product deputy code(from left to right): The first: platform information of module The second: RF PA information of module The third: MCP information of module The fourth: MCP storage size of module The fifth: GPSL1,GPSL5,WIFI,B46 function information of module The sixth: windows PCIe, ESIM function information of module Seventh: mmW function information of module The eighth: reserve

NOTE

1. Above label description of the module only for reference. Please refer to the actual product for appearance.

SIMCom Confidential

8. Appendix

8.1 Coding Schemes and Maximum Net Data Rates over Air Interface

Table 74: Coding schemes and maximum net data rates over air interface

HSDPA device category	Max data rate（peak）	Modulation type
Category 1	1.2Mbps	16QAM, QPSK
Category 2	1.2Mbps	16QAM, QPSK
Category 3	1.8Mbps	16QAM, QPSK
Category 4	1.8Mbps	16QAM, QPSK
Category 5	3.6Mbps	16QAM, QPSK
Category 6	3.6Mbps	16QAM, QPSK
Category 7	7.2Mbps	16QAM, QPSK
Category 8	7.2Mbps	16QAM, QPSK
Category 9	10.2Mbps	16QAM, QPSK
Category 10	14.4Mbps	16QAM, QPSK
Category 11	0.9Mbps	QPSK
Category 12	1.8Mbps	QPSK
Category 13	17.6Mbps	64QAM
Category 14	21.1Mbps	64QAM
Category 15	23.4Mbps	16QAM
Category 16	28Mbps	16QAM
Category 17	23.4Mbps	64QAM
Category 18	28Mbps	64QAM
Category 19	35.5Mbps	64QAM
Category 20	42Mbps	64QAM
Category 21	23.4Mbps	16QAM
Category 22	28Mbps	16QAM
Category 23	35.5Mbps	64QAM
Category 24	42.2Mbps	64QAM
HSUPA device category	**Max data rate（peak）**	**Modulation type**
Category 1	0.96Mbps	QPSK
Category 2	1.92Mbps	QPSK
Category 3	1.92Mbps	QPSK
Category 4	3.84Mbps	QPSK
Category 5	3.84Mbps	QPSK

SIMCom Confidential

Category 6	5.76Mbps	QPSK
LTE-FDD device category (Downlink)	**Max data rate（peak）**	**Modulation type**
Category 1	10Mbps	QPSK/16QAM/64QAM
Category 4	150Mbps	QPSK/16QAM/64QAM
Category 6	300Mbps	QPSK/16QAM/64QAM
Category 12	600Mbps	QPSK/16QAM/64QAM/256QAM
Category 16	1000Mbps	QPSK/16QAM/64QAM/256QAM
LTE-FDD device category (Uplink)	**Max data rate（peak）**	**Modulation type**
Category 1	5Mbps	QPSK/16QAM
Category 2	25Mbps	QPSK/16QAM
Category 3	50Mbps	QPSK/16QAM
Category 4	50Mbps	QPSK/16QAM
Category 5	75Mbps	QPSK/16QAM/64QAM
Category 6	50Mbps	QPSK/16QAM
Category 13	150Mbps	QPSK/16QAM/64QAM

SIMCom Confidential

8.2 Related Documents

Table 75: Related documents

No.	Title	Description
[1]	SIM826X-M2 Series_AT Command Manual	AT Command Manual
[2]	3GPP TS 51.010-1	Digital cellular telecommunications system (Release 5); Mobile Station (MS) conformance specification
[3]	3GPP TS 38.401	NG-RAN; Architecture description
[4]	3GPP TS 34.124	Electromagnetic Compatibility (EMC) for mobile terminals and ancillary equipment.
[5]	3GPP TS 34.121	Electromagnetic Compatibility (EMC) for mobile terminals and ancillary equipment.
[6]	3GPP TS 34.123-1	Technical Specification Group Radio Access Network; Terminal conformance specification; Radio transmission and reception (FDD)
[7]	3GPP TS 34.123-3	User Equipment (UE) conformance specification; Part 3: Abstract Test Suites.
[8]	EN 301 908-02 V2.2.1	Electromagnetic compatibility and Radio spectrum Matters (ERM); Base Stations (BS) and User Equipment (UE) for IMT-2000. Third Generation cellular networks; Part 2: Harmonized EN for IMT-2000, CDMA Direct Spread (UTRA FDD) (UE) covering essential requirements of article 3.2 of the R&TTE Directive
[9]	EN 301 489-24 V1.2.1	Electromagnetic compatibility and Radio Spectrum Matters (ERM); Electromagnetic Compatibility (EMC) standard for radio equipment and services; Part 24: Specific conditions for IMT-2000 CDMA Direct Spread (UTRA) for Mobile and portable (UE) radio and ancillary equipment
[10]	IEC/EN60950-1(2001)	Safety of information technology equipment (2000)
[11]	3GPP TS 51.010-1	Digital cellular telecommunications system (Release 5); Mobile Station (MS) conformance specification
[12]	GCF-CC V3.23.1	Global Certification Forum - Certification Criteria
[13]	2002/95/EC	Directive of the European Parliament and of the Council of 27 January 2003 on the restriction of the use of certain hazardous substances in electrical and electronic equipment (RoHS)
[14]	3GPP TS 38.101	NR radio transmission and reception technical specification
[15]	SIM826X_M2_Antenna Port Mapping and Design Guide	Antenna design guidelines
[16]	SIM8380G-M2 & QPS615 & W82 & RTL8211F & QEP8121 & RTL8221B Connect Pin Mapping(xxxxxx)	SIM8380G-M2 & QPS615 & W82 & RTL8211F & QEP8121 & RTL8221B connect pin mapping.

8.3 Terms and Abbreviations

Table 76: Terms and abbreviations

Abbreviation	Description
ADC	Analog-To-Digital Converter
ARP	Antenna Reference Point
BER	Bit Error Rate
BTS	Base Transceiver Station
CS	Coding Scheme
CSD	Circuit Switched Data
CTS	Clear To Send
DAC	Digital-To-Analog Converter
DRX	Discontinuous Reception
DSP	Digital Signal Processor
DTE	Data Terminal Equipment (typically computer, terminal, printer)
DTR	Data Terminal Ready
DTX	Discontinuous Transmission
DPR	Dynamic Power Reduction
DIV	The Diversity Receive signal
EFR	Enhanced Full Rate
EMC	Electromagnetic Compatibility
ESD	Electrostatic Discharge
ETS	European Telecommunication Standard
EVDO	Evolution Data Only
FCC	Federal Communications Commission (U.S.)
FD	(U)SIM fix dialing phonebook
FDD	Frequency Division Dual
FDMA	Frequency Division Multiple Access
FR	Full Rate
GMSK	Gaussian Minimum Shift Keying
GNSS	Global Navigation Satellite System
GPS	Global Positioning System
HR	Half Rate
HSPA	High Speed Packet Access
HSIC	High-Speed Inter-Chip
I2C	Inter-Integrated Circuit
I2S	Inter-IC Sound
IMEI	International Mobile Equipment Identity
LTE	Long Term Evolution
LB	Low Frequency Band
LAA	Limited Access Authorization

SIMCom Confidential

LNA	Low-noise Amplifier
MO	Mobile Originated
MSB	Most Significant Bit
MHB	Middle And High Frequency Band
MT	Mobile Terminated
MIMO	Multiple Input Multiple Output
NMEA	National Marine Electronics Association
PAP	Password Authentication Protocol
PBCCH	Packet Switched Broadcast Control Channel
PCB	Printed Circuit Board
PCIe	Peripheral Component Interface Express
RF	Radio Frequency
RMS	Root Mean Square (value)
RTC	Real Time Clock
SIM	Subscriber Identification Module
SMS	Short Message Service
SPI	Serial Peripheral Interface
SMPS	Switched-Mode Power Supply
TDD	Time Division Dual
TDMA	Time Division Multiple Access
TE	Terminal Equipment (also referred to as DTE)
TX	Transmit Direction
TRX	The Diversity Receive signal
VSWR	Voltage Standing Wave Ratio
SM	(U)SIM Phonebook
SGMII	Serial Gigabit Media Independent Interface
NC	Not connect
HSDPA	High Speed Downlink Packet Access
HSUPA	High Speed Uplink Packet Access
ZIF	Zero Intermediate Frequency
WCDMA	Wideband Code Division Multiple Access
VCTCXO	Voltage Control Temperature-Compensated Crystal Oscillator
(U)SIM	Universal Subscriber Identity Module
UHB	Ultra-High Frequency Band
UMTS	Universal Mobile Telecommunications System
UART	Universal Asynchronous Receiver Transmitter
mmW	millimeter Wave

SIMCom Confidential

8.4 Safety Caution

Table 77: Safety caution

Marks	Requirements
	When in a hospital or other health care facility, observe the restrictions about the use of mobiles. Switch the cellular terminal or mobile off, medical equipment may be sensitive and not operate normally due to RF energy interference.
	Switch off the cellular terminal or mobile before boarding an aircraft. Make sure it is switched off. The operation of wireless appliances in an aircraft is forbidden to prevent interference with communication systems. Forgetting to think much of these instructions may impact the flight safety, or offend local legal action, or both.
	Do not operate the cellular terminal or mobile in the presence of flammable gases or fumes. Switch off the cellular terminal when you are near petrol stations, fuel depots, chemical plants or where blasting operations are in progress. Operation of any electrical equipment in potentially explosive atmospheres can constitute a safety hazard.
	Your cellular terminal or mobile receives and transmits radio frequency energy while switched on. RF interference can occur if it is used close to TV sets, radios, computers or other electric equipment.
	Road safety comes first! Do not use a hand-held cellular terminal or mobile when driving a vehicle, unless it is securely mounted in a holder for hands free operation. Before making a call with a hand-held terminal or mobile, park the vehicle.
	Mobiles operate over radio frequency signals and cellular networks and cannot be guaranteed to connect in all conditions, especially with a mobile fee or an invalid (U)SIM card. While you are in this condition and need emergent help, please remember to use emergency calls. In order to make or receive calls, the cellular terminal or mobile must be switched on and in a service area with adequate cellular signal strength. Some networks do not allow for emergency call if certain network services or phone features are in use (e.g., lock functions, fixed dialing etc.). You may have to deactivate those features before you can make an emergency call. Also, some networks require that a valid (U)SIM card be properly inserted in the cellular terminal or mobile.

Declaration of conformity

Herby, SIMCom Wireless Solutions Limited declares that this MODULE,SIM8380G-M2 is in compliancewith the essential requirements and other relevant provisions of Directive 2014/53/EU.

Use the MODULE in the environment with the temperature between -30℃ and 70℃.

The device complies with RF specifications when the device used at 5mm from your body.

EU Declaration of Conformity (DoC)

Hereby we,

Name of manufacturer: *SIMCom Wireless Solutions Limited*

Address: SIMCom Headquarters Building, Building 3, No.289 Linhong Road, Changning District, Shanghai, China

declare that this DoC is issued under our sole responsibility and that this product:

Product description: SIMCom Module

Type designation(s): SIM8380G-M2, SIM8260G-M2

Trademark: SIMCom

Object of the declaration: [Model: SIM8380G-M2, SIM8260G-M2, The device is SIMCom Module, it supports , GNSS, 3G/4G/5G functions. For more details, pls refer to the user manual.]

is in conformity with the relevant Union harmonization legislation:

Radio Equipment Directive 2014/53/EU:

with reference to the following standards applied:

Safety	IEC 62368-1: 2018 EN IEC 62368-1: 2020+A11: 2020
EMC	ETSI EN 301 489-1 V2.2.3(2019-11) ETSI EN 301 489-19 V2.2.1(2022-08) ETSI EN 301 489-52 V1.2.1 (2021-11) EN IEC 61000-3-2: 2019 EN 61000-3-3: 2013+A1:2019
Radio	ETSI EN 301 908-1 V15.1.1(2021-09); ETSI EN 301 908-2 V13.1.1(2020-06); ETSI EN 301 908-13 V13.2.1(2022-02); Draft ETSI EN 301 908-25 V15.1.1_0.0.9(2021-06); 3GPP TS 38.521-1 V17.4.0(2022-03); 3GPP TS 38.521-3 V17.4.0(2022-03); ETSI EN 303 413 V1.2.1(2021-04);

SIMCom Confidential

Health	EN IEC 62311: 2020

The Notified Body Kiwa B.V., with Notified Body number 0063 performed:

Applicable Modules: B+C

Where applicable:

The issued EU-type examination certificate: XXXXXXXXX Accessories:

Power Supply Unit	N/A
Battery	N/A
USB Cable	N/A
Headset	N/A

Software version: *2212B03V02X62M44A-M2 (Note: Some software updates will be released by the manufacturer to fix somebug or enhance some function after placing on the market. All versions released by the manufacturer have been verified and stillcompliance with the related rules. All RF parameters (e.g.: frequency range, output power) are not accessible to the user, andcan't be changed by the user.)*

Signed for and on behalf of:

Yongsheng Li

May 24, 2023 China — Mr Yongsheng Li Manager

Place and date of issue — Name, Function, signature

EU Declaration of Conformity (DoC)

Hereby, SIMCom Wireless Solutions Limited declares that this device is in compliance with the essential reguirements and other relevantprovisions of Directive 2014/53/EU, 2011/65/EU.

UK Declaration of Conformity (DoC)

Hereby, SIMCom Wireless Solutions Limited declares that this device is in compliance with Radio Equipment Regulations 2017, the RoHS Requlations 2012.

UK DECLARATION OF CONFORMITY (DoC)

Hereby we,

Name of manufacturer:	SIMCom Wireless Solutions Limited.
Address:	SIMCom Headquarters Building, Building 3, No.289 Linhong Road, Changning District, Shanghai,China

declare that this DoC is issued under our sole responsibility and that this product:

Product description:	SIMCom Module
Type designation(s):	SIM8380G-M2, SIM8260G-M2
Trademark:	SIMCom

Object of the declaration: [Model: SIM8380G-M2, SIM8260G-M2, The device is SIMCom Module, it supports , GNSS,3G/4G/5G functions. For more details, pls refer to the user manual.]

SIMCom Confidential

Is in conformity with the Radio Equipment Regulation 2017 with reference to the following Standards applied:

Health and Safety	IEC 62368-1: 2018 EN IEC 62368-1: 2020+A11: 2020 EN IEC 62311: 2020
Electromagnetic compatibility	ETSI EN 301 489-1 V2.2.3(2019-11) ETSI EN 301 489-19 V2.2.1(2022-08) ETSI EN 301 489-52 V1.2.1 (2021-11) EN IEC 61000-3-2: 2019 EN 61000-3-3: 2013+A1:2019
Radio frequency spectrum usage	ETSI EN 301 908-1 V15.1.1(2021-09); ETSI EN 301 908-2 V13.1.1(2020-06); ETSI EN 301 908-13 V13.2.1(2022-02); Draft ETSI EN 301 908-25 V15.1.1_0.0.9(2021-06); 3GPP TS 38.521-1 V17.4.0(2022-03); 3GPP TS 38.521-3 V17.4.0(2022-03); ETSI EN 303 413 V1.2.1(2021-04);

The UK Approved Body Kiwa Ltd., with Approved Body number 0058 performed:
[choose applicable Modules: B+C]

Where applicable:
The issued UK type examination certificate: [XXXXXXXXXX]

Accessories:

Hareware version: V1.03
Software Version: 2212B03V02X62M44A-M2
Signed for and on behalf of:

June 7, 2023 China
Place and date of issue

Mr Yongsheng Li Manager
Name, Function, signature

FCC MODULAR APPROVAL INFORMATION EXAMPLES for Manual

This device complies with Part 15 of the FCC Rules. Operation is subject to the following two conditions:

1 This device may not cause harmful interference.
2 This device must accept any interference received, including interference that may cause undesiredoperation.

CAUTION: Changes or modifications not expressly approved by the party responsible for compliance could void the user's authority to operate the equipment.

NOTE: This equipment has been tested and found to comply with the limits for a Class B digital device, pursuant to Part 15 of the FCC Rules. These limits are designed to provide reasonable protection against harmful interference in a residential installation. This equipment generates uses and can radiate radio frequency energy and, if not installed and used in accordance with the instructions, may cause harmful interference to radio communications. However, there is no guarantee that interference will not occur in a particular installation. If this equipment does cause harmful interference to radio or television reception, which can be determined by turning the equipment off and on, the user is encouraged to try to correct the interference by one or more of the following measures:

SIMCom Confidential

1 Reorient or relocate the receiving antenna.

2 Increase the separation between the equipment and receiver.

3 Connect the equipment into an outlet on a circuit different from that to which the receiver is connected.

4 Consult the dealer or an experienced radio/TV technician for help.

FCC Radiation Exposure Statement:

This equipment complies with FCC radiation exposure limits set forth for an uncontrolled environment. This equipment should be installed and operated with minimum distance 20cm between the radiator & your body.

OEM INTEGRATION INSTRUCTIONS:

This device is intended only for OEM integrators under the following conditions:

The module must be installed in the host equipment such that 20 cm is maintained between the antenna and users, and the transmitter module may not be co-located with any other transmitter or antenna. The module shall be only used with the internal on-board antenna that has been originally tested and certified with this module. External antennas are not supported. As long as these 3 conditions above are met, further transmitter test will not be required.

However, the OEM integrator is still responsible for testing their end-product for any additional compliance requirements required with this module installed (for example, digital device emissions, PC peripheral requirements, etc.). The end-product may need Verification testing, Declaration of Conformity testing, a Permissive Class II Change or new Certification. Please involve a FCC certification specialist in order to determine what will be exactly applicable for the end-product.

Validity of using the module certification:

In the event that these conditions cannot be met (for example certain laptop configurations or co-location with another transmitter), then the FCC authorization for this module in combination with the host equipment is no longer considered valid and the FCC ID of the module cannot be used on the final product. In these circumstances, the OEM integrator will be responsible for re-evaluating the end product(including the transmitter) and obtaining a separate FCC authorization. In such cases, please involve a FCC certification specialist in order to determine if a Permissive Class II Change or new Certification is required.

Upgrade Firmware:

The software provided for firmware upgrade will not be capable to affect any RF parameters as certified forthe FCC for this module, in order to prevent compliance issues.

End product labeling:

This transmitter module is authorized only for use in device where the antenna may be installed such that20 cm may be maintained between the antenna and users. The final end product must be labeled in a visible area with the following: “Contains FCC ID: 2AJYU-8XN0005”.

SIMCom Confidential

Information that must be placed in the end user manual:

The OEM integrator has to be aware not to provide information to the end user regarding how to install or remove this RF module in the user's manual of the end product which integrates this module. The end user manual shall include all required regulatory information/warning as show in this manual.

"CAUTION: Exposure to Radio Frequency Radiation.

Antenna shall be mounted in such a manner to minimize the potential for human contact during normal operation. The antenna should not be contacted during operation to avoid the possibility of exceeding theFCC radio frequency exposure limit.

Requirement per KDB996369 D03

3.14 List of applicable FCC rules

List the FCC rules that are applicable to the modular transmitter. These are the rules that specifically establish the bands of operation, the power, spurious emissions, and operating fundamental frequencies. DO NOT list compliance to unintentional-radiator rules (Part 15 Subpart B) since that is not a condition of amodule grant that is extended to a host manufacturer. See also Section 2.10 below concerning the need tonotify host manufacturers that further testing is required.3

Explanation: This module meets the requirements of FCC part 22, part 24, part 27, part90.

3.15 Summarize the specific operational use conditions

Describe use conditions that are applicable to the modular transmitter, including for example any limits onantennas, etc. For example, if point-to-point antennas are used that require reduction in power or compensation for cable loss, then this information must be in the instructions. If the use condition limitations extend to professional users, then instructions must state that this information also extends to the host manufacturer's instruction manual. In addition, certain information may also be needed, such as peak gain per frequency band and minimum gain, specifically for master devices in 5 GHz DFS bands.

Explanation: The EUT has a Rubber Duck Antenna, and the antenna use a permanently attached antennawhich is not replaceable

SIMCom Confidential

3.16 Limited module procedures

If a modular transmitter is approved as a "limited module," then the module manufacturer is responsible for approving the host environment that the limited module is used with. The manufacturer of a limited module must describe, both in the filing and in the installation instructions, the alternative means that the limited module manufacturer uses to verify that the host meets the necessary requirements to satisfy the module limiting conditions.

A limited module manufacturer has the flexibility to define its alternative method to address the conditions that limit the initial approval, such as: shielding, minimum signaling amplitude, buffered modulation/data inputs, or power supply regulation. The alternative method could include that the limited module manufacturer reviews detailed test data or host designs prior to giving the host manufacturer approval.

This limited module procedure is also applicable for RF exposure evaluation when it is necessary to demonstrate compliance in a specific host. The module manufacturer must state how control of the productinto which the modular transmitter will be installed will be maintained such that full compliance of the product is always ensured. For additional hosts other than the specific host originally granted with a limited module, a Class II permissive change is required on the module grant to register the additional host as a specific host also approved with the module.

Explanation: The module is not a limited module.

3.17 Trace antenna designs

For a modular transmitter with trace antenna designs, see the guidance in Question 11 of KDB Publication 996369 D02 FAQ – Modules for Micro-Strip Antennas and traces. The integration information shall include for the TCB review the integration instructions for the following aspects:

layout of trace design, parts list (BOM), antenna, connectors, and isolation requirements.

1 Information that includes permitted variances (e.g., trace boundary limits, thickness, length, width,shape(s),
dielectric constant, and impedance as applicable for each type of antenna);

2 Each design shall be considered a different type (e.g., antenna length in multiple(s) of frequency,
the wavelength, and antenna shape (traces in phase) can affect antenna gain and must be considered);

3 The parameters shall be provided in a manner permitting host manufacturers to design the printedcircuit (PC) board layout;

4 Appropriate parts by manufacturer and specifications;

5 Test procedures for design verification; and

6 Production test procedures for ensuring compliance.

SIMCom Confidential

The module grantee shall provide a notice that any deviation(s) from the defined parameters of the antenna trace, as described by the instructions, require that the host product manufacturer must notify the module grantee that they wish to change the antenna trace design. In this case, a Class II permissive change application is required to be filed by the grantee, or the host manufacturer can take responsibility through the change in FCC ID (new application) procedure followed by a Class II permissive change application.

Explanation: Yes, The module with trace antenna designs, and This manual has been shown the layout of trace design, antenna, connectors, and isolation requirements.

3.18 RF exposure considerations

It is essential for module grantees to clearly and explicitly state the RF exposure conditions that permit a host product manufacturer to use the module. Two types of instructions are required for RF exposure information: (1) to the host product manufacturer, to define the application conditions (mobile, portable – xx cm from a person's body); and (2) additional text needed for the host product manufacturer to provide to end users in their end-product manuals. If RF exposure statements and use conditions are not provided, then the host product manufacturer is required to take responsibility of the module through a change in FCC ID (new application).

Explanation: This module complies with FCC RF radiation exposure limits set forth for an uncontrolled environment, This equipment should be installed and operated with a minimum distance of 20 centimeters between the radiator and your body." This module is designed to comply with the FCC statement, FCC ID is: 2AJYU-8XN0005.

3.19 Antennas

A list of antennas included in the application for certification must be provided in the instructions. For modular transmitters approved as limited modules, all applicable professional installer instructions must be included as part of the information to the host product manufacturer. The antenna list shall also identify the antenna types (monopole, PIFA, dipole, etc. (note that for example an "omni-directional antenna" is not considered to be a specific "antenna type")).

For situations where the host product manufacturer is responsible for an external connector, for example with an RF pin and antenna trace design, the integration instructions shall inform the installer that unique antenna connector must be used on the Part 15 authorized transmitters used in the host product. The module manufacturers shall provide a list of acceptable unique connectors.

Explanation: The EUT has a Rubber Duck Antenna, and the antenna use a permanently attached antenna which is not replaceable.

3.20 Label and compliance information

Grantees are responsible for the continued compliance of their modules to the FCC rules. This includes

SIMCom Confidential

advising host product manufacturers that they need to provide a physical or e-label stating “Contains FCCID” with their finished product. See Guidelines for Labeling and User Information for RF Devices – KDB Publication 784748.

Explanation: The host system using this module, should have label in a visible area indicated the following texts: “Contains FCC ID: 2AJYU-8XN0005”

3.21 Information on test modes and additional testing requirements5

Additional guidance for testing host products is given in KDB Publication 996369 D04 Module Integration Guide. Test modes should take into consideration different operational conditions for a stand-alone modular transmitter in a host, as well as for multiple simultaneously transmitting modules or other transmitters in a host product.

The grantee should provide information on how to configure test modes for host product evaluation for different operational conditions for a stand-alone modular transmitter in a host, versus with multiple, simultaneously transmitting modules or other transmitters in a host.

Grantees can increase the utility of their modular transmitters by providing special means, modes, or instructions that simulates or characterizes a connection by enabling a transmitter. This can greatly simplify a host manufacturer’s determination that a module as installed in a host complies with FCC requirements.

Explanation: Top band can increase the utility of our modular transmitters by providing instructions that simulates or characterizes a connection by enabling a transmitter.

3.22 Additional testing, Part 15 Subpart B disclaimer

The grantee should include a statement that the modular transmitter is only FCC authorized for the specificrule parts (i.e., FCC transmitter rules) listed on the grant, and that the host product manufacturer is responsible for compliance to any other FCC rules that apply to the host not covered by the modular transmitter grant of certification. If the grantee markets their product as being Part 15 Subpart B compliant (when it also contains unintentional-radiator digital circuity), then the grantee shall provide a notice stating that the final host product still requires Part 15 Subpart B compliance testing with the modular transmitter installed.

Explanation: The module without unintentional-radiator digital circuity, so the module does not require an evaluation by FCC Part 15 Subpart B. The host shoule be evaluated by the FCC Subpart B.

SIMCom Confidential

IC Information

This device complies with Industry Canada license-exempt RSS standard(s). Operation is subject to the following two conditions:

(1) this device may not cause interference, and

(2) this device must accept any interference, including interference that may cause undesired operation of the device.

Cet appareil est conforme avec Industrie Canada exempts de licence standard RSS (s). L'opération est soumise aux deux conditions suivantes:

(1) cet appareil ne peut causer d'interférences, et

(2) cet appareil doit accepter toute interférence, y compris les interférences qui peuvent causer un mauvais fonctionnement de l'appareil.

The end product must be labeled to display the Industry Canada certification number of the module.

Contains transmitter module IC: 23761-8XN0003

Le dispositif d'accueil doivent être étiquetés pour afficher le numéro de certification d'Industrie Canada du module.

Contient module émetteur IC: 23761-8XN0003

Information for OEM Integrator

This device is intended only for OEM integrators under the following conditions:

1) The antenna must be installed such that 20 cm is maintained between the antenna and users, and

2) The transmitter module may not be co-located with any other transmitter or antenna.

End product labelling

The label for end product must include “Contains IC: 23761-8XN0003”.

“CAUTION: Exposure to Radio Frequency Radiation.

This equipment complies with FCC radiation exposure limits set forth for an uncontrolled environment. This equipment should be installed and operated with minimum distance of 20cm between the radiator and your body. This transmitter module is authorized only for use in device where the antenna may be installed such that 20 cm may be maintained between the antenna and users.”

The Host Marketing Name (HMN) must be indicated at any location on the exterior of the host product or product packaging or product literature, which shall be available with the host product or online.

This radio transmitter [IC: 23761-8XN0003] has been approved by Innovation, Science and Economic Development Canada to operate with the antenna types listed below, with the maximum permissible gain indicated. Antenna types not included in this list that have a gain greater than the maximum gain indicated for any type listed are strictly prohibited for use with this device.