A company of SIM Tech

SIM7000A_User Manual_V1.01

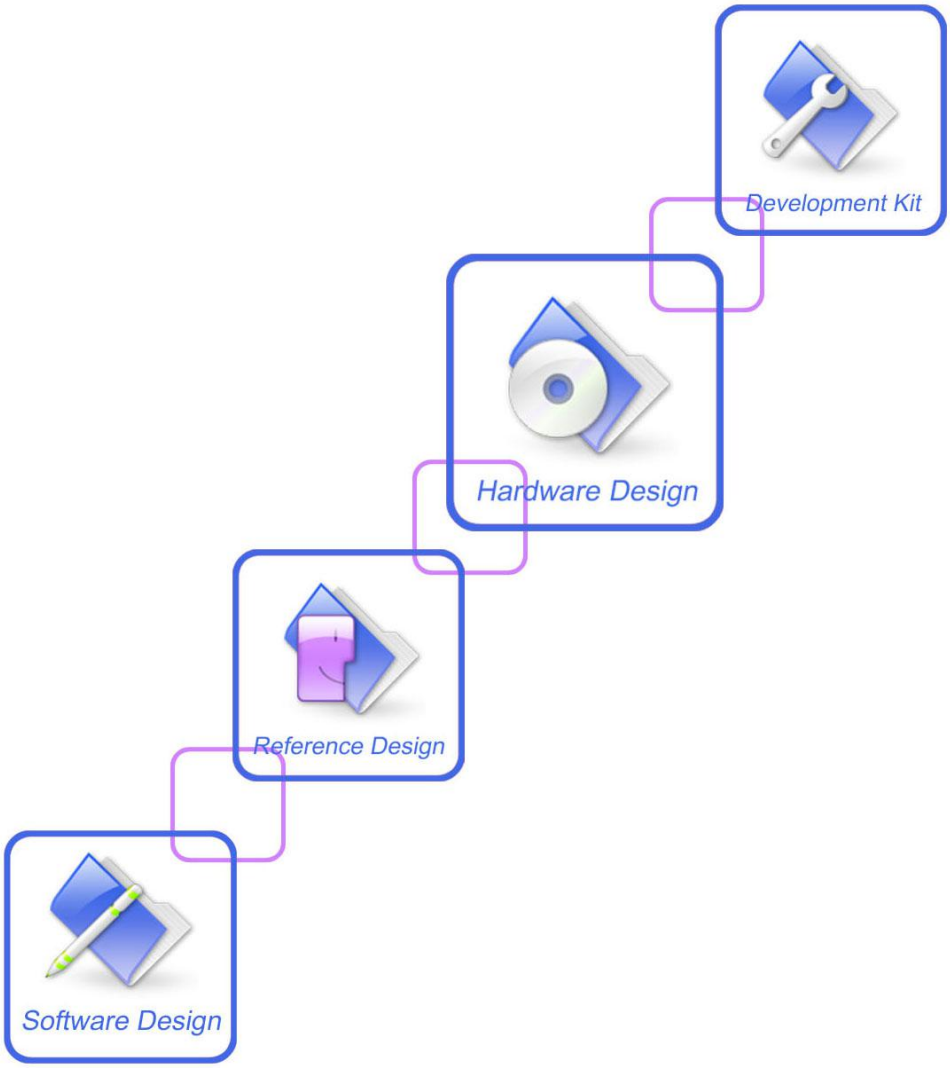

Document Title	SIM7000A_User Manual
Version	1.00
Date	2017-5-23
Status	Released
Document Control ID	SIM7000A_User Manual_V1.01

Compliance Information

FCC Compliance Statement: This device complies the FCC Rules . Operation is subject to the following two conditions: 1. This device may not cause harmful interference, and 2. This device must accept any interference received, including interference that may cause undesired operation. This device must accept any interference received, including interference that may cause undesired operation. Product that is a radio transmitter is labeled with FCC ID.

FCC Caution:

(1)Exposure to Radio Frequency Radiation. This equipment must be installed and operated in accordance with provided instructions and the antenna(s) used for this transmitter must be installed to provide a separation distance of at least 20 cm from all persons and must not be collocated or operating in conjunction with any other antenna or transmitter. End-users and installers must be provided with antenna installation instructions and transmitter operating conditions for satisfying RF exposure compliance.

(2) Any changes or modifications not expressly approved by the grantee of this device could void the user's authority to operate the equipment.

(3) This Transmitter must not be co-located or operating in conjunction with any other antenna or transmitter.

(4) Changes or modifications to this unit not expressly approved by the party responsible for compliance could void the user authority to operate the equipment.

(5) the modules FCC ID is not visible when installed in the host, or

(6) if the host is marketed so that end users do not have straight forward commonly used methods for access to remove the module so that the FCC ID of the module is visible; then an additional permanent label referring to the enclosed module: Contains Transmitter Module FCC ID: 2AJYU-SIM7000A or Contains FCC ID: 2AJYU-SIM7000A must be used.

General Notes

SIMCom offers this information as a service to its customers to support the application and engineering efforts that use the products designed by SIMCom. The information provided is based on the requirements specifically from the customers. SIMCom has not undertaken any independent search for additional relevant information, including any information that may be in the customer's possession. Furthermore, the system validation of the product designed by SIMCom within a larger electronic system remains the responsibility of the customer or the customer's system integrator. All specifications supplied herein are subject to change without notice.

Copyright

This document contains the proprietary technical information which is the property of SIMCom Limited, copying of this document, giving it to others, the using or communication of the contents thereof are forbidden without the official authority by SIMCom. Offenders are liable to the payment of the damages. All rights are reserved in the event of grant of a patent or the registration of a utility model or design. All specifications supplied herein are subject to change without notice

Copyright © SIMCom Wireless Solutions Co., Ltd. 2017

Contents

Contents **4**

Table Index **6**

Figure Index **7**

Revision History **8**

1 Introduction **9**
1.1 Product Outline 9
1.2 Hardware Interface Overview 10
1.3 Hardware Block Diagram 11
1.4 Functional Overview 12

2 Package Information **14**
2.1 Pin Assignment Overview 14
2.2 Pin Description 16
2.3 Mechanical Information 19
2.4 Footprint Recommendation 20

3 Interface Application **21**
3.1 Power Supply 21
3.1.1 Power Supply Design Guide 22
3.1.2 Recommended Power Supply Circuit 22
3.1.3 Voltage Monitor 23
3.2 Power on/Power off/Reset Function 24
3.2.1 Power on 24
3.2.2 Power off 25
3.2.3 Reset Function 26
3.3 UART Interface 27
3.3.1 UART Design Guide 27
3.3.2 RI and DTR Behavior 28
3.4 USB Interface 29
3.5 SIM Interface 30
3.5.1 SIM Application Guide 30
3.5.2 Recommended SIM Card Holder 31
3.6 PCM Interface 32
3.6.1 PCM timing 32
3.6.2 PCM Application Guide 34
3.7 I2C Interface 34
3.8 Network status 34
3.9 Other interface 35
3.9.1 ADC 35
3.9.2 LDO 36

4 RF Specifications **37**
4.1 LTE CAT-M1RF Specifications 37

4.2 LTE CAT-M1Antenna Design Guide....40
4.3 GNSS.... 41
4.3.1 GNSS Technical specification.... 41
4.3.2 GNSS Application Guide....42

5 Electrical Specifications.... 44
5.1 Absolute maximum ratings....44
5.2 Operating conditions....44
5.3 Operating Mode.... 45
5.3.1 Operating Mode Definition....45
5.3.2 Sleep mode....46
5.3.3 Minimum functionality mode and Flight mode....46
5.4 Current Consumption....47
5.5 ESD Notes....48

6 SMT Production Guide.... 49
6.1 Top and Bottom View of SIM7000....49
6.2 Label Information.... 50
6.3 Typical SMT Reflow Profile....51
6.4 Moisture Sensitivity Level (MSL)....51
6.5 Stencil Foil Design Recommendation.... 52

7 Packaging....53
7.1 tray packaging....53

Appendix....56
A. Reference Design.... 56
B. Coding Schemes and Maximum Net Data Rates over Air Interface.....错误！未定义书签。
C. Related Documents....57
D. Terms and Abbreviations.... 59
E. Safety Caution....61

Table Index

Table 1: SIM7000 frequency bands and air interface..... 9
Table 2: General features..... 12
Table 3: Pin definition..... 15
Table 4: IO parameters definition..... 16
Table 5: Pin description..... 16
Table 6: VBAT pins electronic characteristic..... 21
Table 7: Recommended Zener diode list..... 22
Table 8: Power on timing and electronic characteristic..... 25
Table 9: Power off timing and electronic characteristic..... 26
Table 10: RESET pin electronic characteristic..... 27
Table 11: SIM electronic characteristic in 1.8V mode (SIM_VDD=1.8V)..... 30
Table 12: SIM electronic characteristic 3.0V mode (SIM_VDD=2.95V)..... 30
Table 13: Amphenol SIM socket pin description..... 31
Table 14: PCM format..... 32
Table 15: PCM timing parameters..... 33
Table 16: NETLIGHT pin status..... 35
Table 17: ADC electronic characteristics..... 35
Table 18: Electronic characteristic..... 36
Table 19: Conducted transmission power..... 37
Table 20: Operating frequencies..... 37
Table 21: E-UTRA operating bands..... 38
Table 22: Conducted receive sensitivity..... 38
Table 23: CAT-M1 Reference sensitivity (QPSK)..... 39
Table 24: .....错误！未定义书签。
Table 25: Trace loss..... 40
Table 26: Recommended TVS.....错误！未定义书签。
Table 27: Absolute maximum ratings..... 44
Table 28: Recommended operating ratings..... 44
Table 29: 1.8V Digital I/O characteristics*..... 44
Table 30: Operating temperature..... 45
Table 31: Operating mode Definition..... 45
Table 32: Current consumption on VBAT Pins (VBAT=3.8V)..... 47
Table 34: The ESD performance measurement table (Temperature: 25℃, Humidity: 45%)..... 48
Table 35: The description of label information..... 50
Table 36: Moisture Sensitivity Level and Floor Life..... 51
Table 37: Tray size..... 54
Table 38: Small Carton size..... 54
Table 39: Big Carton size..... 55
Table 39: Coding Schemes and Maximum Net Data Rates over Air Interface.....错误！未定义书签。
Table 40: Related Documents..... 57
Table 41: Terms and Abbreviations..... 59
Table 42: Safety Caution..... 61

Figure Index

Figure 1: SIM7000 block diagram..... 11
Figure 2: Pin assignment overview..... 14
Figure 3: Dimensions (Unit: mm)..... 19
Figure 4: Footprint recommendation (Unit: mm)..... 20
Figure 5: VBAT voltage drop during burst emission (GSM/GPRS)..... 21
Figure 6: Power supply application circuit..... 22
Figure 7: Linear regulator reference circuit..... 23
Figure 8: Switching mode power supply reference circuit..... 23
Figure 9: Reference power on/off circuit..... 24
Figure 10: Power on timing sequence..... 24
Figure 11: Power off timing sequence..... 25
Figure 12: Reference reset circuit..... 26
Figure 13: UART full modem..... 27
Figure 14: UART null modem..... 27
Figure 15: Reference circuit of level shift..... 28
Figure 16: RI behaviour（SMS and URC report）..... 28
Figure 17: RI behaviour（voice call）..... 29
Figure 18: USB reference circuit..... 29
Figure 19: SIM interface reference circuit..... 30
Figure 20: Amphenol SIM card socket..... 31
Figure 21: PCM_SYNC timing..... 32
Figure 22: External codec to module timing..... 32
Figure 23: Module to external codec timing..... 33
Figure 24: Audio codec reference circuit..... 34
Figure 25: I2C reference circuit..... 34
Figure 26: NETLIGHT reference circuit..... 35
Figure 27：Power on sequence of the VDD_EXT..... 36
Figure 28: Antenna matching circuit (MAIN_ANT)..... 41
Figure 29: Active antenna circuit..... 42
Figure 30: Passive antenna circuit (Default)..... 42
Figure 31: Top and bottom view of SIM7000..... 49
Figure 32: Label information..... 50
Figure 33: The ramp-soak-spike reflow profile of SIM7000..... 51
Figure 34: packaging diagram..... 53
Figure 35: Tray drawing..... 54
Figure 36: Small carton drawing..... 54
Figure 37: Big carton drawing..... 54
Figure 38: Reference design..... 56

Revision History

Data	Version	Description of change	Author
2017-05-23	1.00	Original	Tu Hongjun Li Ya

1 Introduction

This document describes the electronic specifications, RF specifications, interfaces, mechanical characteristics and testing results of the SIMCom SIM7000A module. With the help of this document and SIM7000A software application notes/user guides, users can understand and use SIM7000A module to design and develop applications quickly.

1.1 Product Outline

The SIM7000 series modules support LTE CAT-M1
The physical dimension of SIM7000A is 24 × 24 × 2.6mm mm. And the physical dimension is compatible with the packaging of SIM900, SIM800 and SIM800F.

Table 1: SIM7000A frequency bands and air interface

Standard	Frequency	SIM7000A
GSM	EGSM900MHz	
	DCS1800MHz	
LTE-FDD* HD-FDD	LTE-FDD B1	
	LTE-FDD B2	✓
	LTE-FDD B3	
	LTE-FDD B4	✓
	LTE-FDD B5	
	LTE-FDD B6	
	LTE-FDD B8	
	LTE-FDD B12	✓
	LTE-FDD B13	✓
	LTE-FDD B18	
	LTE-FDD B19	
	LTE-FDD B20	
	LTE-FDD B26	
LTE-TDD*	LTE CAT-M1TDD B39	
Category	LTE-M1	✓
GNSS		✓

1.2 Hardware Interface Overview

The interfaces are described in detail in the next chapters include:

- **Power Supply**
- **USB Interface**
- **UART Interface**
- **SIM Interface**
- **ADC**
- **LDO Power Output**
- **PCM Interface**
- **I2C Interface**
- **GPIOs**
- **Antenna Interface**

1.3 Hardware Block Diagram

The block diagram of the SIM7000A module is shown in the figure below.

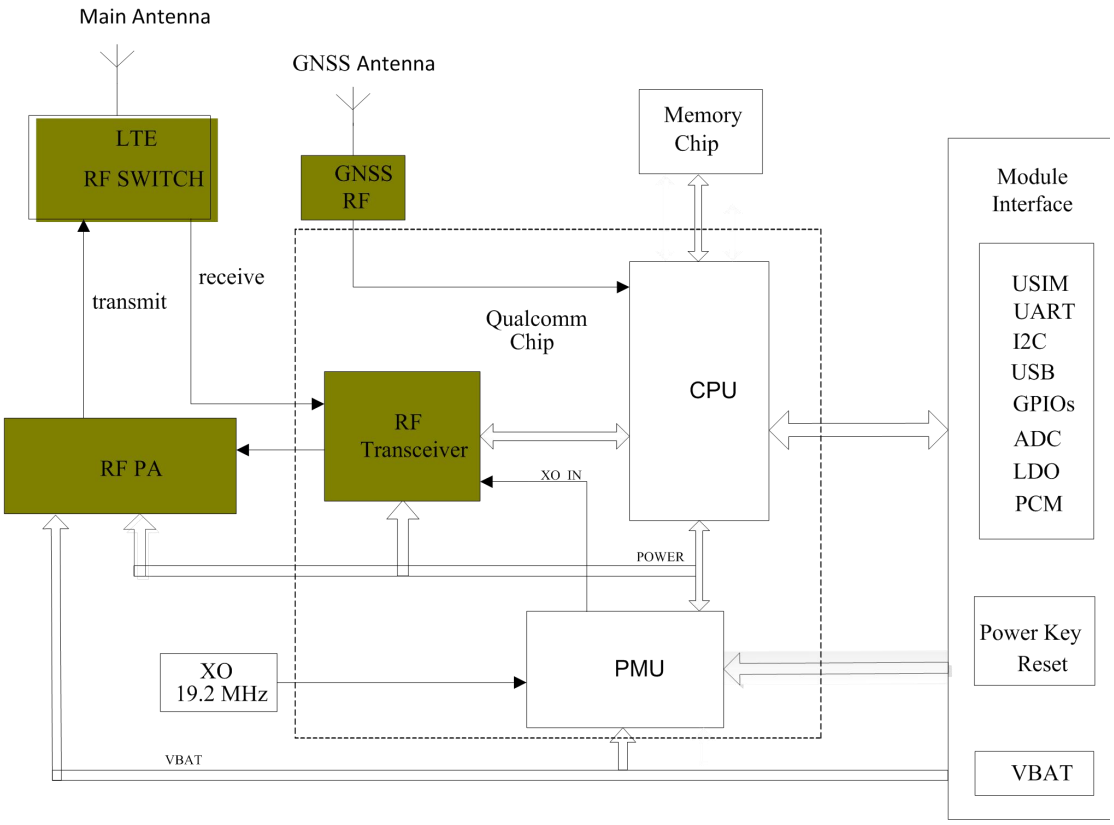

Figure 1: SIM7000 block diagram

1.4 Functional Overview

Table 2: General features

Feature	Implementation
Power supply	Power supply voltage 3.0～4.3V
Power saving	Current in sleep mode: 1mA Current in PSM mode: 9uA
Radio frequency bands	Please refer to the table 1
Transmitting power	LTE CAT-M1power class: 3 (0.25W)
Data Transmission Throughput	LTE CAT-M1CAT M1: 300Kbps (DL) LTE CAT-M1CAT M1: 375Kbps (UL)
Antenna	LTE CAT-M1main antenna. GNSS antenna
GNSS	GNSS engine (GPS,GLONASS and BD) Protocol: NMEA
SMS	MT, MO, CB, Text and PDU mode SMS storage: SIM card or ME(default)
SIM interface	Support identity card: 1.8V/ 3V
SIM application toolkit	Support SAT class 3, GSM 11.14 Release 98 Support USAT
Audio feature	Support PCM interface Only support PCM master mode and short frame sync, 16-bit linear data formats
UART interface	A full modem serial port by default Baud rate: 300bps to 4Mbps(default:115200bps) Can be used as the AT commands or data stream channel Support RTS/CTS hardware handshake Multiplex ability according to GSM 07.10 Multiplexer Protocol
USB	USB 2.0 high speed interface
Firmware upgrade	Firmware upgrade over USB interface
Physical characteristics	Size:24 × 24 × 2.6mm Weight:3g
Temperature range	Normal operation temperature: -30°C to + 80°C Extended operation temperature: -40°C to + 85°C* Storage temperature -45°C to + 90°C

Note: Module is able to make and receive voice calls, data calls, SMS and make GPRS/LTE CAT-M1traffic in -40℃ ~ +85℃. The performance will be reduced slightly from the 3GPP

specifications if the temperature is outside the normal operating temperature range and still within the extreme operating temperature range.

2 Package Information

2.1 Pin Assignment Overview

All functions of the SIM7000A will be provided through 68 pads that will be connected to the customers' platform. The following Figure is a high-level view of the pin assignment of the SIM7000.

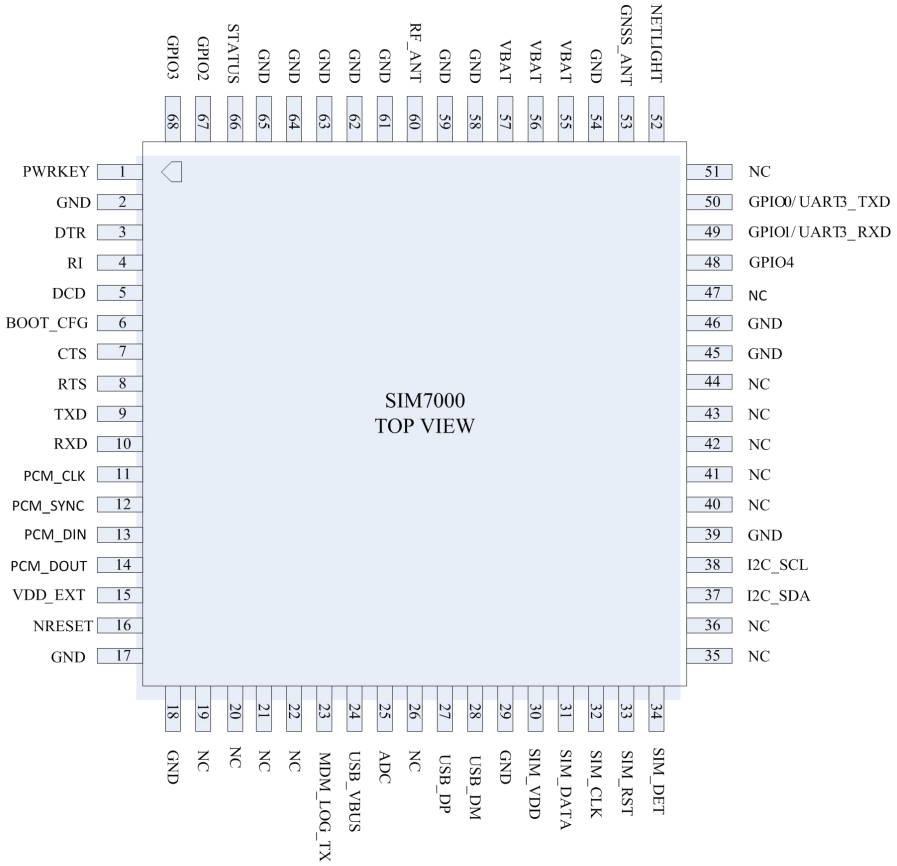

Figure 2: Pin assignment overview

Table 3: Pin definition

Pin No.	Pin Name	Pin No.	Pin Name
1	PWRKEY	2	GND
3	DTR	4	RI
5	DCD	6	BOOT_CFG
7	CTS	8	RTS
9	TXD	10	RXD
11	PCM_CLK	12	PCM_SYNC
13	PCM_DIN	14	PCM_DOUT
15	VDD_EXT	16	NRESET
17	GND	18	GND
19	NC	20	NC
21	NC	22	NC
23	MDM_LOG_TX	24	USB_VBUS
25	ADC	26	NC
27	USB_DP	28	USB_DM
29	GND	30	SIM_VDD
31	SIM_DATA	32	SIM_CLK
33	SIM_RST	34	SIM_DET
35	NC	36	NC
37	I2C_SDA	38	I2C_SCL
39	GND	40	NC
41	NC	42	NC
43	NC	44	NC
45	GND	46	GND
47	NC	48	GPIO4
49	GPIO1/UART3_RXD	50	GPIO0/UART3_TXD
51	NC	52	NETLIGHT
53	GNSS_ANT	54	GND
55	VBAT	56	VBAT
57	VBAT	58	GND
59	GND	60	RF_ANT
61	GND	62	GND
63	GND	64	GND
65	GND	66	STATUS
67	GPIO2	68	GPIO3

NOTE: Before the normal power up, BOOT_CFG cannot be pulled up.

2.2 Pin Description

Table 4: IO parameters definition

Pin type	Description
PI	Power input
PO	Power output
AI	Analog input
AIO	Analog input/output
I/O	Bidirectional input /output
DI	Digital input
DO	Digital output
DOH	Digital output with high level
DOL	Digital output with low level
PU	Pull up
PD	Pull down

Table 5: Pin description

Pin name	Pin No.	Default status	Description	Comment
Power supply				
VBAT	55、56、57	PI	Power supply, voltage range: 3.0～4.3V.	
VDD_EXT	15	PO	LDO power output 1.8V for other external circuits with Max 50mA current output, such as level shift circuit.	If unused, keep it open.
GND	2、17、18、29、39、45、46、54、58、59、61、62、63、64、65		Ground	
System Control				
PWRKEY	1	DI,PU	System power on/off control input, active low. The efficient input level must be below 0.5V.	The level is 0.8V when this PIN is floating;
NRESET	16	DI, PU	System reset control input, active low.	NRESET has been pulled up to 1.8V via 40Kohm resistor internally.

SIM interface				
SIM_DATA	31	I/O,PU	SIM Card data I/O, which has been pulled up via a 10KR resistor to SIM_VDD internally. Do not pull it up or down externally.	All lines of SIM interface should be protected against ESD.
SIM_RST	33	DO	SIM Reset	
SIM_CLK	32	DO	SIM clock	
SIM_VDD	30	PO	Power output for SIM card, its output Voltage depends on SIM card type automatically. Its output current is up to 50mA.	
SIM_DET	34	DI	SIM card detecting input	If used, keep a 10k Ω resistor pulling up to the VDD_EXT
USB				
USB_VBUS	24	DI,PD	Valid USB detection input with 3.5~5.25V detection voltage	
USB_DP	27	I/O	Positive line of the differential, bi-directional USB signal.	
USB_DM	28	I/O	Negative line of the differential, bi-directional USB signal.	
UART interface				
DTR	3	DI,PU	DTE get ready	If unused, keep them open.
RI	4	DOH	Ring Indicator	
DCD	5	DOH	Carrier detects	
CTS	7	DOH	Clear to Send	
RTS	8	DI,PU	Request to send	
TXD	9	DOH	Transmit Data	
RXD	10	DI,PU	Receive Data	
I2C interface				
I2C_SDA	37	I/O	I2C clock output	If unused, keep open, or else pull them up via 2.2KΩ resistors to the VDD_EXT.
I2C_SCL	38	DO	I2C data input/output	
PCM interface				
PCM_CLK	11	DO	PCM data bit clock.	If unused, please keep them open.
PCM_SYNC	12	DO	PCM data frame sync signal.	
PCM_DIN	13	DI	PCM data input.	
PCM_DOUT	14	DO	PCM data output.	

GPIO				
NETLIGHT	52	DO	LED control output as network status indication.	If unused, keep them open.
STATUS	66	DO	Operating status output. High level: Power on and firmware ready Low level: Power off	
GPIO0	50	IO	Default: GPIO Optional: UART3_TXD	
GPIO1	49	IO	Default: GPIO Optional: UART3_RXD	
GPIO2	67	IO	GPIO	
GPIO3	68	IO	GPIO	
GPIO4	48	IO	GPIO	
RF interface				
GNSS_ANT	53	AI	GNSS antenna soldering pad	
RF_ANT	60	AIO	MAIN antenna soldering pad	
Other interface				
BOOT_CFG	6	DI,PD	Boot configuration input. Module will be forced into USB download mode by connect this pin to VDD_EXT during power up.	Reserve two test points for BOOT_CFG and VDD_EXT. ***DO NOT PULL UP BOOT_CFG DURING NORMAL POWER UP!***
MDM_LOG_TX	23	DO	Module log output for SW debug. (only used for platform)	Reserve a test point for this pin.
ADC	25	AI	Analog-digital converter input. voltage range: 0.1～1.7V.	If unused, keep them open.
NC	19、20、21、22、26、35、36、40、41、42、43、44、47、51、		No connection.	Keep it open

2.3 Mechanical Information

The following figure shows the package outline drawing of SIM7000.

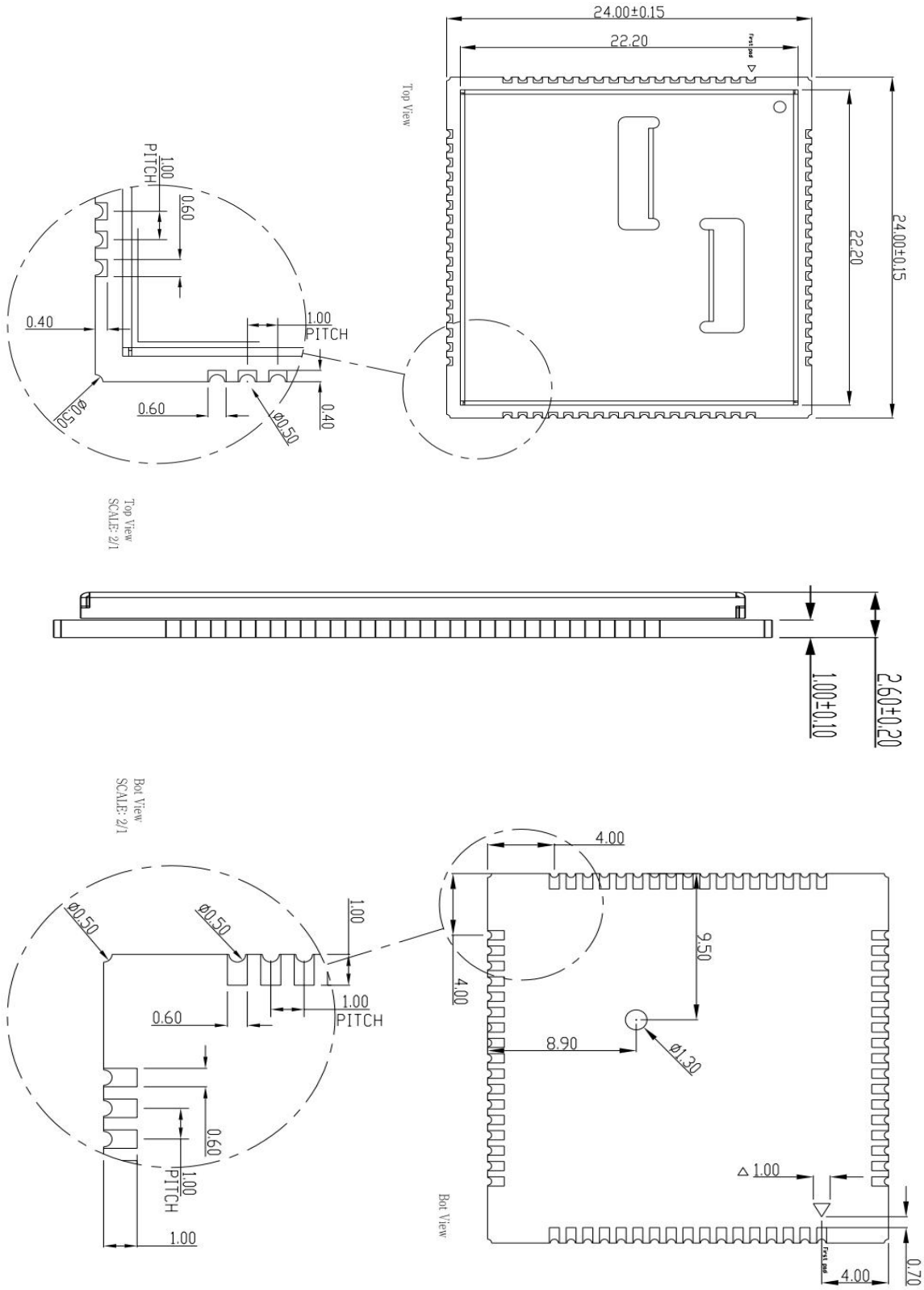

Figure 3: Dimensions (Unit: mm)

2.4 Footprint Recommendation

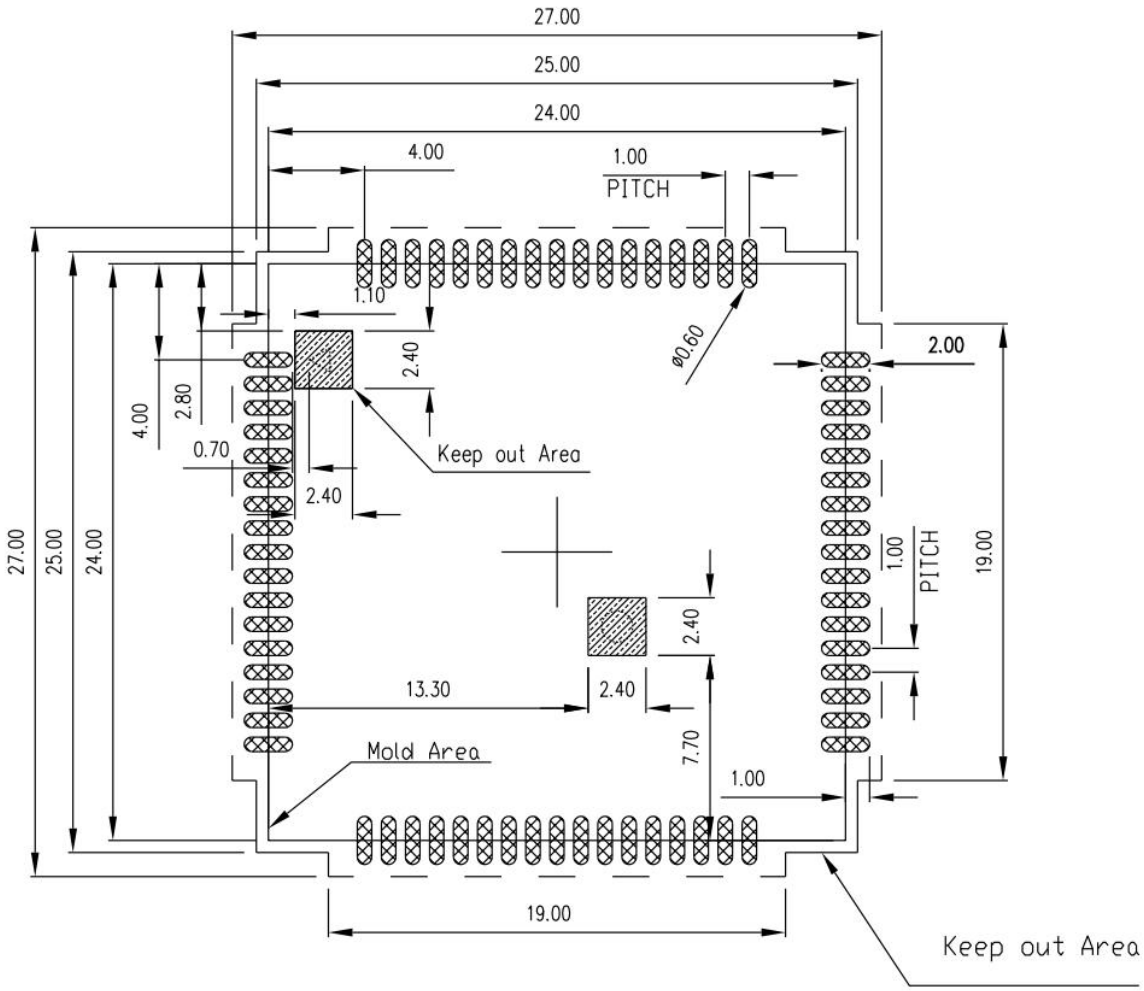

Figure 4: Footprint recommendation (Unit: mm)

3 Interface Application

3.1 Power Supply

Pin 55, pin 56 and pin 57 are VBAT power input.

On VBAT pads, the ripple current up to 0.6A typically due to LTE CAT-M1emission burst and up to 2A typically due to GSM/GPRS emission burst (every 4.615ms). It may cause voltage drop. So the power supply for these pads must be able to provide sufficient current up to more than 2A in order to avoid the voltage drop is more than 300mV.

The following figure shows the VBAT voltage ripple wave at the maximum power transmit phase in GSM emission mode.

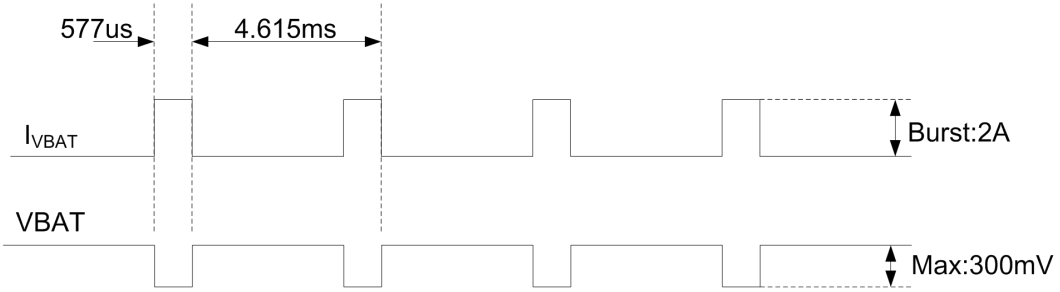

Figure 5: VBAT voltage drop during burst emission (GSM/GPRS)

Note: The test condition: The voltage of power supply for VBAT is 3.8V, Cd=100 µF tantalum capacitor (ESR=0.7Ω) and Cf =100nF (Please refer to Figure 6—Application circuit).

Table 6: VBAT pins electronic characteristic

Symbol	Description	Min.	Typ.	Max.	Unit
VBAT	Module power voltage	3.0	3.8	4.3	V
$I_{VBAT(peak)}$	Module power peak current in GSM emission mode.	-	2	-	A
	Module power peak current in LTE CAT-M1emission mode.	-	0.6	-	A
$I_{VBAT(average)}$	Module power average current in normal mode	Please refer to the table 32			
$I_{VBAT(sleep)}$	Power supply current in sleep mode				
$I_{VBAT(power-off)}$	Module power current in power off mode.	-	-	7	uA

3.1.1 Power Supply Design Guide

Make sure that the voltage on the VBAT pins will never drop below 3.0V, even during a transmit burst, when current consumption may rise up to 2A. If the voltage drops below 3.0V, module will be work abnormally.

Note: If the power supply for VBAT pins can support up to 2A, using a total of more than 300uF capacitors is recommended, or else users must using a total of 1000uF capacitors typically, in order to avoid the voltage drop is more than 300mV.

Some multi-layer ceramic chip (MLCC) capacitors (0.1uF, 1uF) with low ESR in high frequency band can be used for EMC.

These capacitors should be put as close as possible to VBAT pads. Also, users should keep VBAT trace on circuit board wider than 2 mm to minimize PCB trace impedance. The following figure shows the recommended circuit.

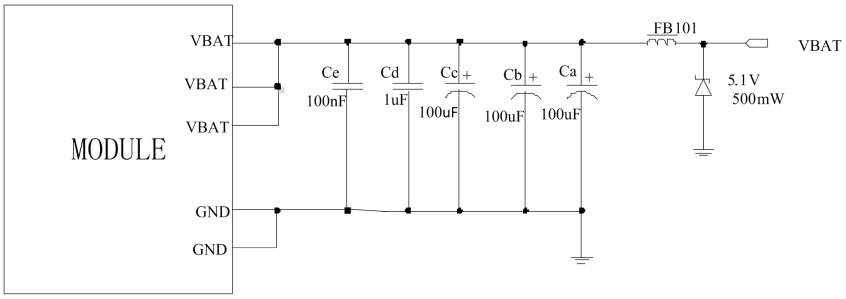

Figure 6: Power supply application circuit

In addition, for over voltage protection, it is suggested to use a zener diode with 5.1V reverse voltage and more than 500mW power dissipation.

Table 7: Recommended Zener diode list

No.	Manufacturer	Part Number	Power dissipation	Package
1	On semi	MMSZ5231BT1G	500mW	SOD123
2	Prisemi	PZ3D4V2H	500mW	SOD323
3	Vishay	MMSZ4689-V	500mW	SOD123
4	Crownpo	CDZ55C5V1SM	500mW	0805

3.1.2 Recommended Power Supply Circuit

It is recommended that a switching mode power supply or a linear regulator power supply is used. It is important to make sure that all the components used in the power supply circuit can resist a peak current up to 2A.

The following figure shows the linear regulator reference circuit with 5V input and 3.8V output.

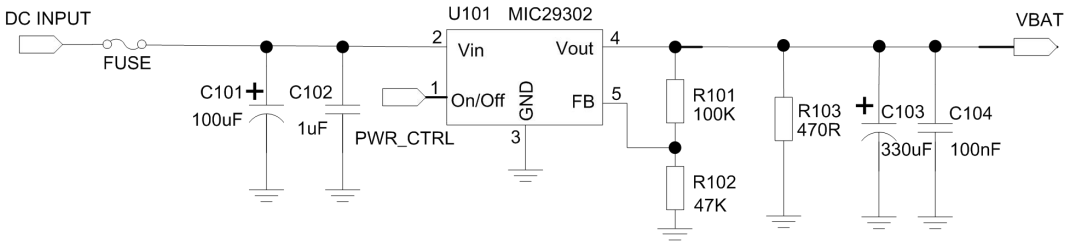

Figure 7: Linear regulator reference circuit

If there is a big voltage difference between input and output for VBAT power supply, or the efficiency is extremely important, then a switching mode power supply will be preferable. The following figure shows the switching mode power supply reference circuit.

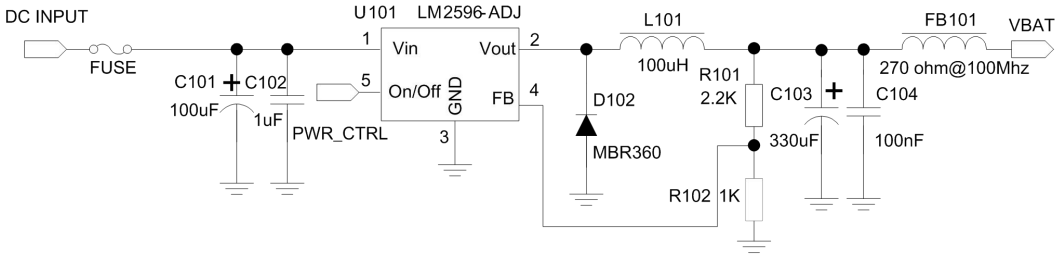

Figure 8: Switching mode power supply reference circuit

Note: The Switching Mode power supply solution for VBAT must be chosen carefully against Electro Magnetic Interference and ripple current from depraving RF performance.

3.1.3 Voltage Monitor

To monitor the VBAT voltage, the AT command “AT+CBC” can be used.

To monitor whether the VBAT voltage is inside a special range, the AT command “AT+CBATCHK” can be used to enable the overvoltage warning function and the under-voltage warning function. The default value of the overvoltage warning function in the software is 4.3V, and the default value of the under-voltage warning function is 3.1V.

When the VBAT voltage is out of the range, the module will be power off. If users need to power off SIM7000 when the VBAT voltage is out of the range, the AT command “AT+CBATCHK” can be used to enable the overvoltage power-off function and the under-voltage power-off function. The default value of the overvoltage power-off function in the software is 4.4V, and the default value of the under-voltage power-off function is 2.9V.

Note: Under-voltage warning function and under-voltage power-off function are disabled by default. For more information about these AT commands, please refer to Document [1].

3.2 Power on/Power off/Reset Function

3.2.1 Power on

SIM7000 can be powered on by pulling the PWRKEY pin to ground.

The PWRKEY pin has been pulled up with a diode to 1.8V internally, so it does not need to be pulled up externally. It is strongly recommended to put a 100nF capacitor and an ESD protection diode close to the PWRKEY pin, as it would strongly enhance the ESD performance of PWRKEY pin. Please refer to the following figure for the recommended reference circuit.

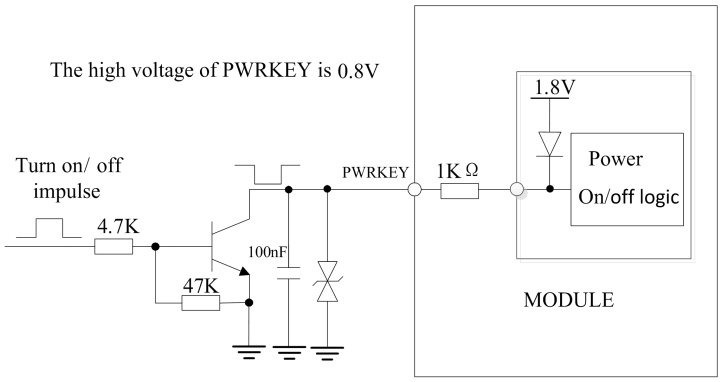

Figure 9: Reference power on/off circuit

The power-on scenarios are illustrated in the following figure.

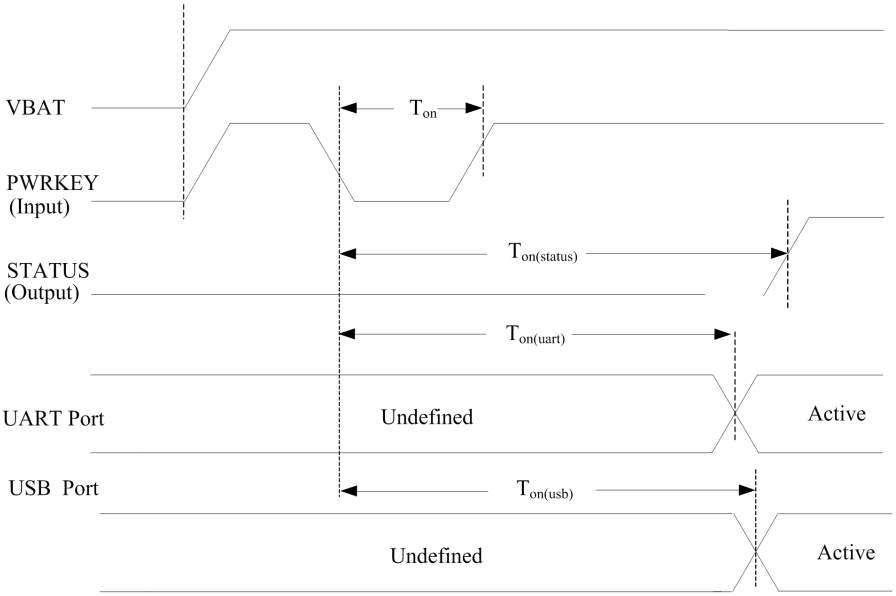

Figure 10: Power on timing sequence

Table 8: Power on timing and electronic characteristic

Symbol	Parameter	Min.	Typ.	Max.	Unit
T_{on}	The time of active low level impulse of PWRKEY pin to power on module	72	-	-	ms
$T_{on(status)}$	The time from power-on issue to STATUS pin output high level(indicating power up ready)	4.2	-	-	s
$T_{on(uart)}$	The time from power-on issue to UART port ready	3.5	-	-	s
$T_{on(usb)}$	The time from power-on issue to USB port ready	3.5	-	-	s
V_{IH}	Input high level voltage on PWRKEY pin	0.6	0.8	1.8	V
V_{IL}	Input low level voltage on PWRKEY pin	-0.3	0	0.5	V

3.2.2 Power off

The following methods can be used to power off SIM7000.

- Method 1: Power off SIM7000 by pulling the PWRKEY pin to ground.
- Method 2: Power off SIM7000 by AT command “AT+CPOWD”.
- Method 3: over-voltage or under-voltage automatic power off. The voltage range can be set by AT command “AT+CBATCHK”.
- Method 4: over-temperature or under-temperature automatic power off.

Note: If the temperature is outside the range of -30~+80 ℃, some warning will be reported via AT port. If the temperature is outside the range of -40~+85 ℃, SIM7000 will be powered off automatically.

For details about “AT+CPOWD” and “AT+CBATCHK”, please refer to Document [1].

These procedures will make modules disconnect from the network and allow the software to enter a safe state, and save data before module be powered off completely.

The power off scenario by pulling down the PWRKEY pin is illustrated in the following figure.

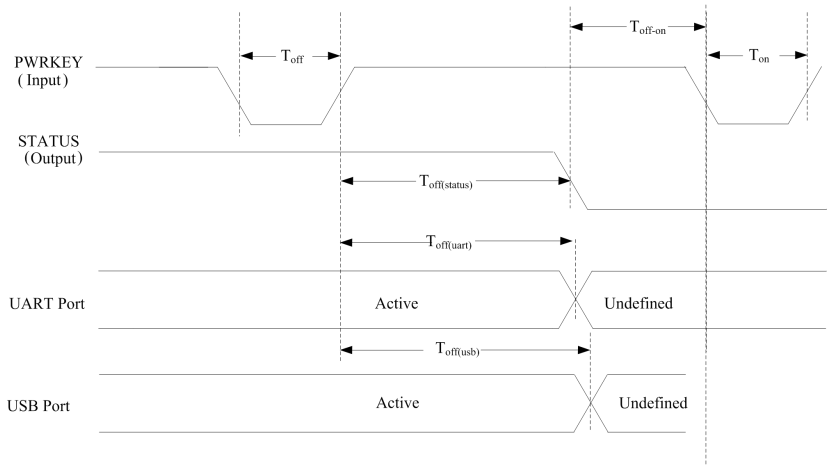

Figure 11: Power off timing sequence

Table 9: Power off timing and electronic characteristic

Symbol	Parameter	Time value			Unit
		Min.	Typ.	Max.	
T_{off}	The active low level time pulse on PWRKEY pin to power off module	1.2	-	-	s
$T_{off(status)}$	The time from power-off issue to STATUS pin output low level(indicating power off)*	1.3	-	-	s
$T_{off(uart)}$	The time from power-off issue to UART port off	1.3	-	-	s
$T_{off(usb)}$	The time from power-off issue to USB port off	1.3	-	-	s
T_{off-on}	The buffer time from power-off issue to power-on issue	1	-	-	s

Note: The STATUS pin can be used to detect whether module is powered on or not. When module has been powered on and firmware goes ready, STATUS will be high level, or else STATUS will still low level.

3.2.3 Reset Function

SIM7000 can be reset by pulling the RESET pin to ground.

Note: This function is only used as an emergency reset. The RESET pin will be ineffectiveness in the power off mode.

The RESET pin has been pulled up to 1.8V with a 40KΩ resistor internally. So it does not need to be pulled up externally. It is strongly recommended to put a100nF capacitor and an ESD protection diode close to the RESET pin. Please refer to the following figure for the recommended reference circuit.

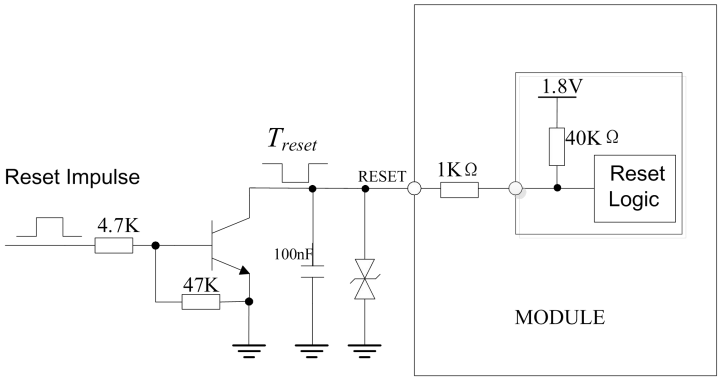

Figure 12: Reference reset circuit

Table 10: RESET pin electronic characteristic

Symbol	Description	Min.	Typ.	Max.	Unit
T_{reset}	The active low level time impulse on RESET pin to reset module	50	100	500	ms
V_{IH}	Input high level voltage	1.2	1.8	2.1	V
V_{IL}	Input low level voltage	-0.3	0	0.8	V

3.3 UART Interface

SIM7000 provides a 7-wire UART (universal asynchronous serial transmission) interface as DCE (Data Communication Equipment). AT commands and data transmission can be performed through UART interface.

Moreover, if users need to use two UART simultaneously, SIM7000 also provides a 2-wire UART interface multiplex from GPIO. The GPIO0 multiplex as TXD of the 2-wire UART, and the GPIO1 multiplex as RXD of the 2-wire UART. Standard version cannot support this function

3.3.1 UART Design Guide

The following figures show the reference design.

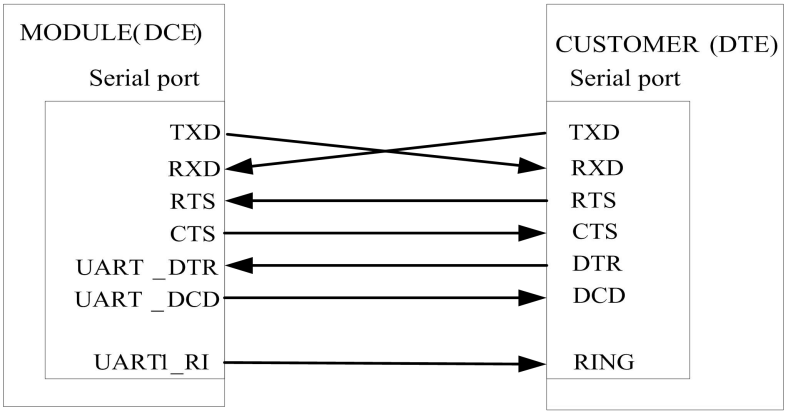

Figure 13: UART full modem

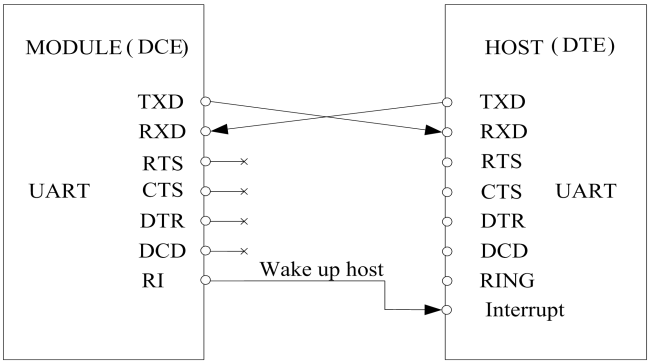

Figure 14: UART null modem

The SIM7000 UART is 1.8V voltage interface. If user's UART application circuit is 3.3V voltage interface, the level shifter circuits should be used for voltage matching. The TXB0108RGYR provided by Texas Instruments is recommended. The following figure shows the voltage matching reference design.

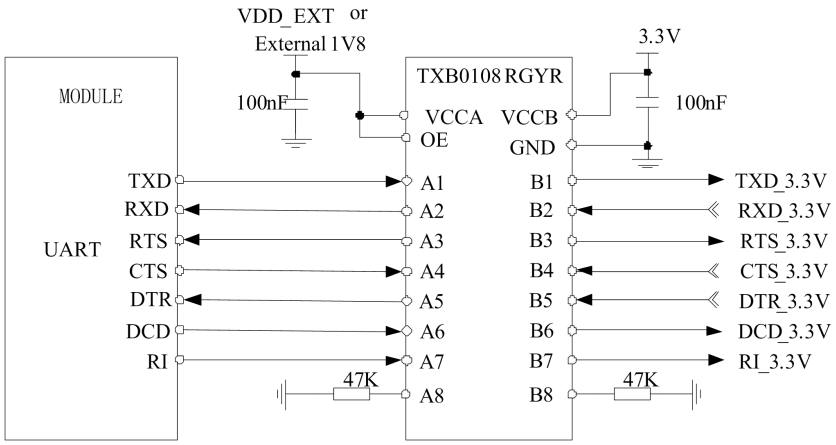

Figure 15: Reference circuit of level shift

To comply with RS-232-C protocol, the RS-232-C level shifter chip should be used to connect SIM7000 to the RS-232-C interface, for example SP3238ECA, etc.

Note: SIM7000 supports the following baud rates: 300, 600, 1200, 2400, 4800, 9600, 19200, 38400, 57600, 115200, 230400, 460800, 921600, 3200000, 3686400, 4000000bps. The default band rate is 115200bps.

3.3.2 RI and DTR Behavior

The RI pin description:

The RI pin can be used to interrupt output signal to inform the host controller such as application CPU.

Normally RI will keep high level until certain conditions such as receiving SMS, or a URC report coming, and then it will change to low level. It will stay low until the host controller clears the interrupted event with "AT+CRIRS" AT command.

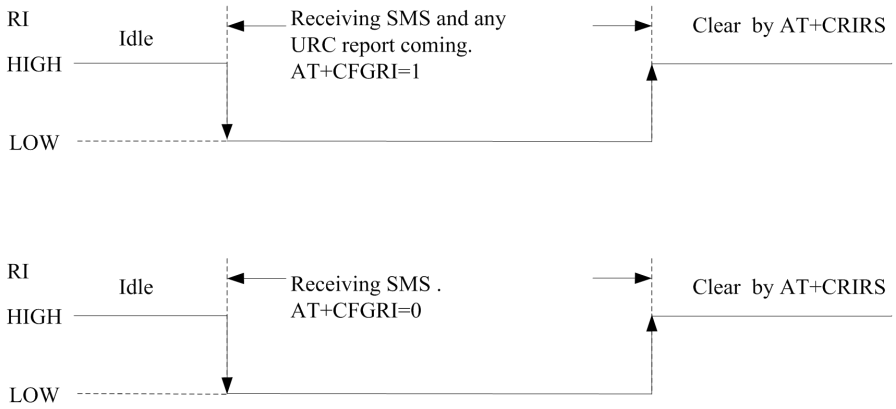

Figure 16: RI behaviour（SMS and URC report）

Normally RI will be kept at a high level until a voice call, then it will output periodic rectangular wave with 5900ms low level and 100ms high level. It will output this kind of periodic rectangular wave until the call is answered or hung up.

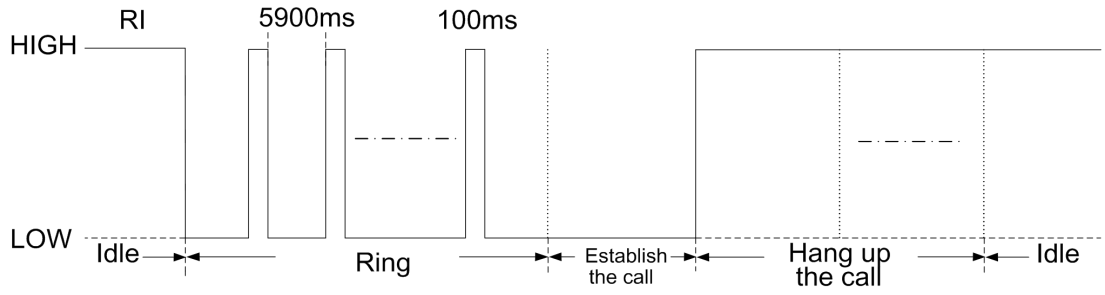

Figure 17: RI behaviour（voice call）

Note: For more details of AT commands about UART, please refer to document [1] and [22].

The DTR pin description:

After setting the AT command "AT+CSCLK=1", SIM7000 will enter sleep mode by pulling up the DTR pin when module is in the idle mode. In sleep mode, the UART is unavailable. When SIM7000 enters sleep mode, pulling down DTR can wake up module.

3.4 USB Interface

The SIM7000 contains a USB interface compliant with the USB2.0 specification as a peripheral, but the USB charging function is not supported.

SIM7000 supports the USB suspend and resume mechanism which can reduce power consumption. If there is no data transmission on the USB bus, SIM7000 will enter suspend mode automatically, and will be resumed by some events such as voice call, receiving SMS, etc.

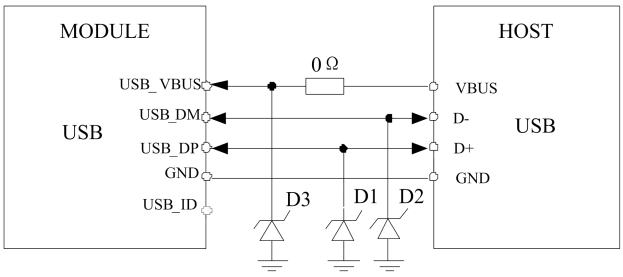

Figure 18: USB reference circuit

Because of the high speed on USB bus, more attention should be paid to the influence of the junction capacitance of the ESD component on USB data lines. Typically, the capacitance of the D1 and D2 should be less than 1pF.

D3 is suggested to select the diode with anti-ESD and voltage surge function, or customer could add a ZENER diode for surge clamping.

Note：The USB_DM and USB_DP nets must be traced by 90Ohm+/-10% differential impedance.

3.5 SIM Interface

SIM7000 supports both 1.8V and 3.0V SIM Cards.

Table 11: SIM electronic characteristic in 1.8V mode (SIM_VDD=1.8V)

Symbol	Parameter	Min.	Typ.	Max.	Unit
SIM_VDD	LDO power output voltage	1.75	1.8	1.95	V
V_{IH}	High-level input voltage	0.65*SIM_VDD	-	SIM_VDD +0.3	V
V_{IL}	Low-level input voltage	-0.3	0	0.35*SIM_VDD	V
V_{OH}	High-level output voltage	SIM_VDD -0.45	-	SIM_VDD	V
V_{OL}	Low-level output voltage	0	0	0.45	V

Table 12: SIM electronic characteristic 3.0V mode (SIM_VDD=2.95V)

Symbol	Parameter	Min.	Typ.	Max.	Unit
SIM_VDD	LDO power output voltage	2.75	2.95	3.05	V
V_{IH}	High-level input voltage	0.65*SIM_VDD	-	SIM_VDD +0.3	V
V_{IL}	Low-level input voltage	-0.3	0	0.25*SIM_VDD	V
V_{OH}	High-level output voltage	SIM_VDD -0.45	-	SIM_VDD	V
V_{OL}	Low-level output voltage	0	0	0.45	V

3.5.1 SIM Application Guide

It is recommended to use an ESD protection component such as ESDA6V1W5 produced by ST (www.st.com) or SMF15C produced by ON SEMI (www.onsemi.com). Note that the SIM peripheral circuit should be close to the SIM card socket. The following figure shows the 6-pin SIM card holder reference circuit.

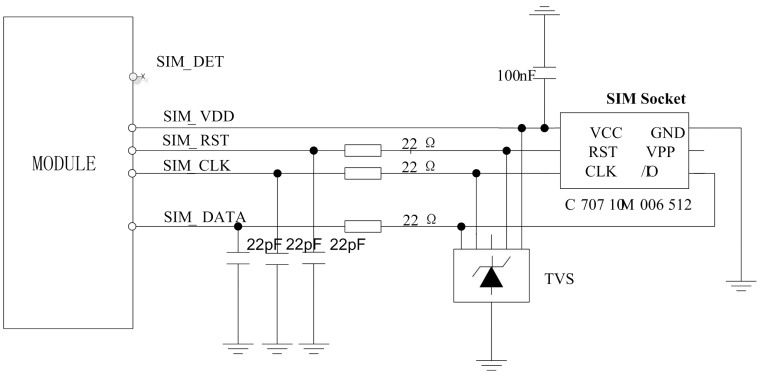

Figure 19: SIM interface reference circuit

Note: SIM_DATA has been pulled up with a 10KΩ resistor to SIM_VDD in module. A 100nF capacitor on SIM_VDD is used to reduce interference. For more details of AT commands about SIM, please refer to document [1].SIM_CLK is very important signal, the rise time and fall time of SIM_CLK should be less than 40ns, otherwise the SIM card might not be initialized correctly. If SIM_DET is used, a 10KΩ resistor is necessary to pulling up to the power VDD_EXT.

3.5.2 Recommended SIM Card Holder

It is recommended to use the 6-pin SIM socket such as C707 10M006 512 produced by Amphenol. User can visit http://www.amphenol.com for more information about the holder.

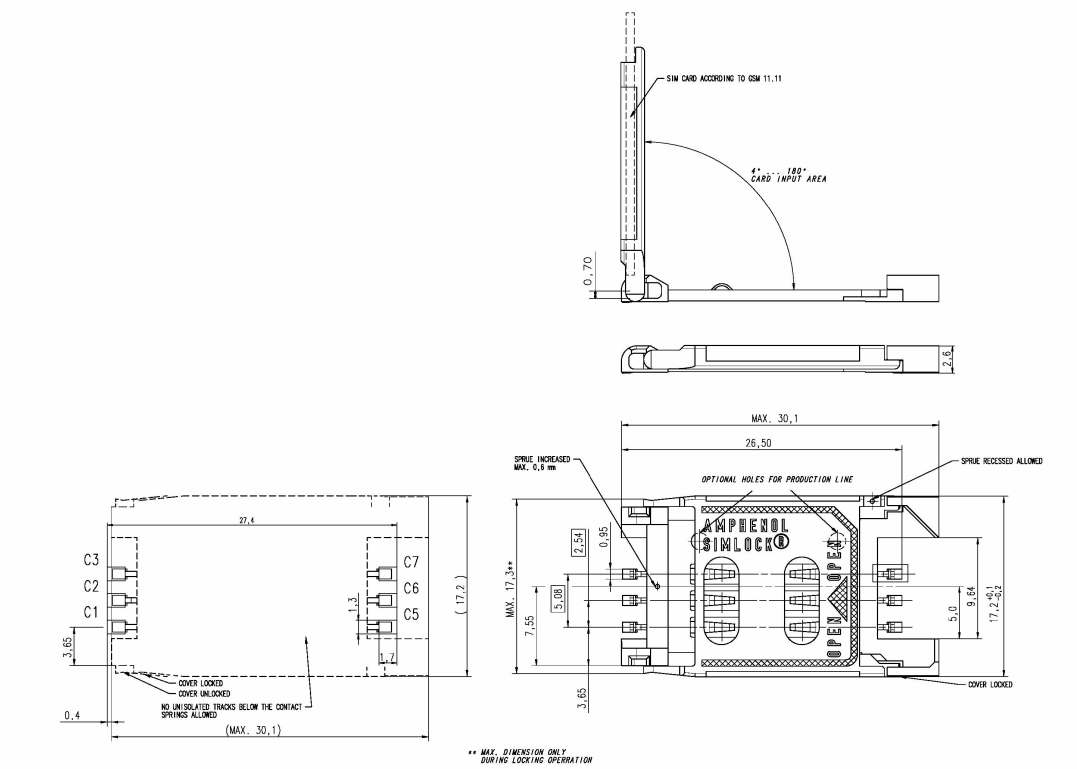

Figure 20: Amphenol SIM card socket

Table 13: Amphenol SIM socket pin description

Pin	Signal	Description
C1	SIM_VDD	SIM Card Power supply.
C2	SIM_RST	SIM Card Reset.
C3	SIM_CLK	SIM Card Clock.
C5	GND	Connect to GND.
C6	VPP	
C7	SIM_DATA	SIM Card data I/O.

3.6 PCM Interface

SIM7000 provides a PCM interface for external codec, which can be used in master mode with short sync and 16 bits linear format.

Table 14: PCM format

Characteristics	Specification
Line Interface Format	Linear(Fixed)
Data length	16bits(Fixed)
PCM Clock/Sync Source	Master Mode(Fixed)
PCM Clock Rate	2048 KHz (Fixed)
PCM Sync Format	Short sync(Fixed)
Data Ordering	MSB

Note: For more details about PCM AT commands, please refer to document [1].

3.6.1 PCM timing

SIM7000 supports 2.048 MHz PCM data and sync timing for 16 bits linear format codec.

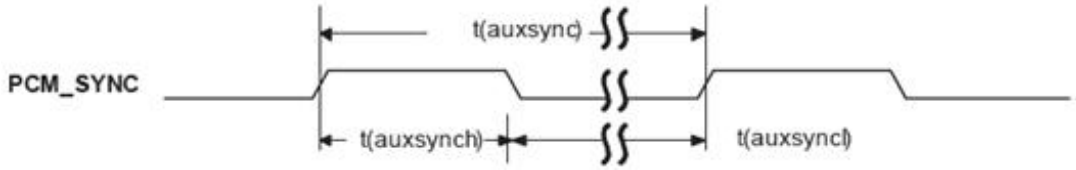

Figure 21: PCM_SYNC timing

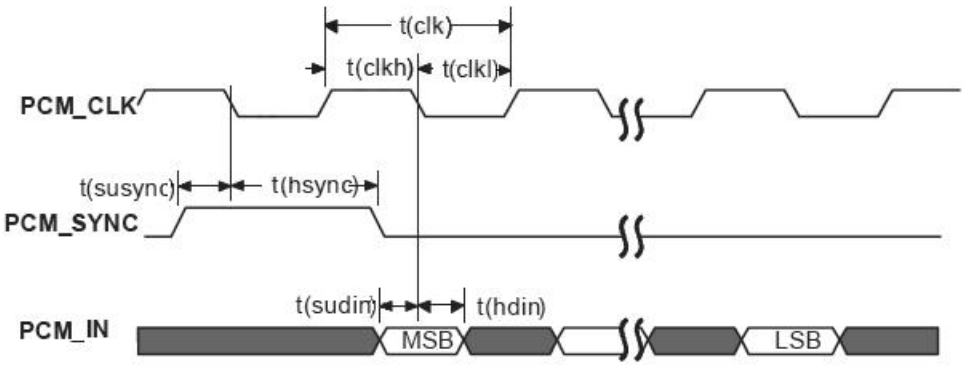

Figure 22: External codec to module timing

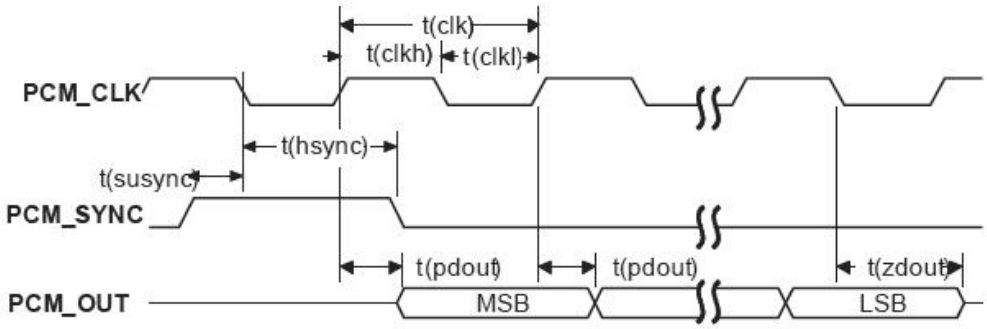

Figure 23: Module to external codec timing

Table 15: PCM timing parameters

Parameter	Description	Min.	Typ.	Max.	Unit
T(sync)	PCM_SYNC cycle time	–	125	–	µs
T(synch)	PCM_SYNC high level time	–	488	–	ns
T(syncl)	PCM_SYNC low level time	–	124.5	–	µs
T(clk)	PCM_CLK cycle time	–	488	–	ns
T(clkh)	PCM_CLK high level time	–	244	–	ns
T(clkl)	PCM_CLK low level time	–	244	–	ns
T(susync)	PCM_SYNC setup time high before falling edge of PCM_CLK	–	122	–	ns
T(hsync)	PCM_SYNC hold time after falling edge of PCM_CLK	–	366	–	ns
T(sudin)	PCM_IN setup time before falling edge of PCM_CLK	60	–	–	ns
T(hdin)	PCM_IN hold time after falling edge of PCM_CLK	60	–	–	ns
T(pdout)	Delay from PCM_CLK rising to PCM_OUT valid	–	–	60	ns
T(zdout)	Delay from PCM_CLK falling to PCM_OUT HIGH-Z	–	–	60	ns

3.6.2 PCM Application Guide

The following figure shows the external codec reference design.

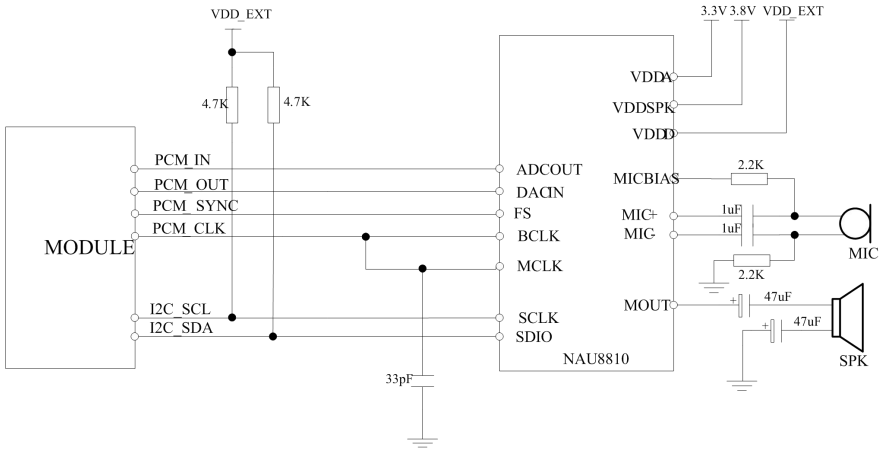

Figure 24: Audio codec reference circuit

3.7 I2C Interface

SIM7000 provides a I2C interface compatible with I2C specification, version 5.0, with clock rate up to 400 kbps. Its operation voltage is 1.8V.

The following figure shows the I2C bus reference design.

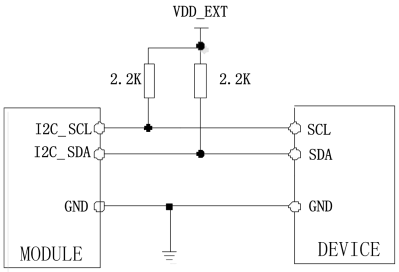

Figure 25: I2C reference circuit

Note：I2C_SDA and I2C_SCL do not have pull-up resistors in module. So the two external pulling up resistors are needed in application circuit.

"AT+CRIIC and AT+CWIIC" AT commands could be used to read/write register values of the I2C peripheral devices. For more details about AT commands please refer to document [1].

3.8 Network status

The NETLIGHT pin is used to control Network Status LED, its reference circuit is shown in the

following figure.

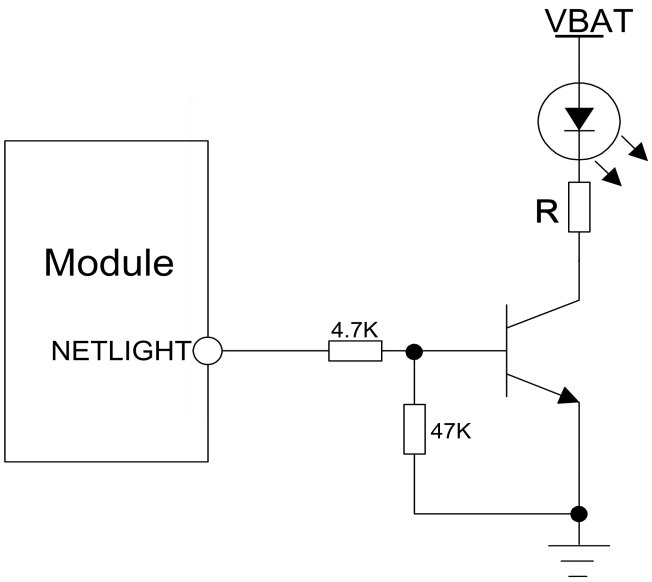

Figure 26: NETLIGHT reference circuit

Note: The value of the resistor named "R" depends on the LED characteristic.

Table 16: NETLIGHT pin status

NETLIGHT pin status	Module status
64ms ON, 800ms OFF	No registered network
64ms ON, 3000ms OFF	Registered network
64ms ON, 300ms OFF	Data transmit
OFF	Power off or PSM mode

Note: NETLIGHT output low level as "OFF", and high level as "ON".

3.9 Other interface

3.9.1 ADC

SIM7000 has a dedicated ADC pin. It is available for digitizing analog signals such as battery voltage and so on. The electronic specifications are shown in the following table.

Table 17: ADC electronic characteristics

Characteristics	Min.	Typ.	Max.	Unit
Resolution	–	15	–	Bits
Conversion time	–	442	–	ms

Input Range	0.1		1.7	V
Input serial resistance	1	–	–	MΩ

Note: "AT+CADC" can be used to read the voltage of the ADC pin, for more details, please refer to document [1].

3.9.2 LDO

SIM7000 has a LDO power output named VDD_EXT. The output voltage is 1.8V.

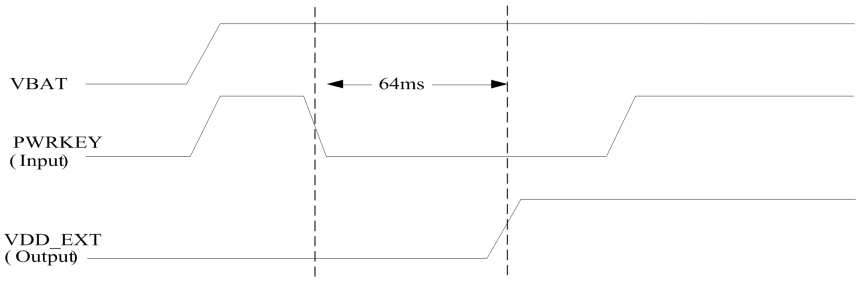

Figure 27: Power on sequence of the VDD_EXT

Table 18: Electronic characteristic

Symbol	Description	Min.	Typ.	Max.	Unit
V_{VDD_EXT}	Output voltage	1.7	1.8	1.9	V
I_O	Output current	-	-	50	mA

Note: The VDD_EXT is used to the IO power in the module. The Output voltage is not supported to set.

4 RF Specifications

4.1 LTE CAT-M1 RF Specifications

Table 19: Conducted transmission power

Frequency	Power	Min.
LTE-FDD B2	23dBm +/-2.7dB	<-40dBm
LTE-FDD B4	23dBm +/-2.7dB	<-40dBm
LTE-FDD B12	23dBm +/-2.7dB	<-40dBm
LTE-FDD B13	23dBm +/-2.7dB	<-40dBm

Table 20: Operating frequencies

Frequency	Receiving	Transmission
GPS L1 BAND	1574.4 ～1576.44 MHz	-
GLONASS	1598 ～1606 MHz	-
BD	1559 ～1563 MHz	
LTE CAT-M1BAND	Refers to Table 21	

Table 21: E-UTRA operating bands

E-UTRA	UL Freq.	DL Freq.	Duplex Mode
1	1920 ~1980 MHz	2110 ~2170 MHz	HD-FDD
3	1710 ~1785 MHz	1805 ~1880 MHz	HD-FDD
5	824 ~849 MHz	869 ~894 MHz	HD-FDD
6	830 ~840 MHz	875 ~885 MHz	HD-FDD
8	880 ~915 MHz	925 ~960 MHz	HD-FDD
12	699 ~716 MHz	729 ~746 MHz	HD-FDD
13	777 ~787 MHz	746 ~756 MHz	HD-FDD
18	815 ~830 MHz	860 ~875 MHz	HD-FDD
19	830 ~845 MHz	875 ~890 MHz	HD-FDD
26	814 ~849 MHz	859 ~894 MHz	HD-FDD
39	1880 ~1920 MHz	1880 ~1920 MHz	TDD

Table 22: Conducted receive sensitivity

Frequency	Receive sensitivity(Typical)	Receive sensitivity(MAX)
LTE CAT-M1FDD/TDD	Refers to Table 23	

Table 23: CAT-M1 Reference sensitivity (QPSK)

E-UTRA Band	REFSENS (dBm)	Duplex Mode
1	-103	HD-FDD
2	-101	HD-FDD
3	-100	HD-FDD
4	-103	HD-FDD
5	-101.5	HD-FDD
7	-101	HD-FDD
8	-100.5	HD-FDD
11	-103	HD-FDD
12	-100	HD-FDD
13	-100	HD-FDD
18	-103	HD-FDD
19	-103	HD-FDD
20	-100.5	HD-FDD
21	-103	HD-FDD
26	-101	HD-FDD
27	-101.5	HD-FDD
28	-101.5	HD-FDD
31	-97.3	HD-FDD
39	-103.7	TDD
41	-101.7	TDD

Maximum Power Reduction (MPR)

Modulation	Channel bandwidth / Transmission bandwidth (N_{RB})						MPR (dB)
	1.4 MHz	3.0 MHz	5 MHz	10 MHz	15 MHz	20 MHz	
QPSK	>2	>2	>1	>4	-	-	≤ 1
QPSK	>5	>5	-	-	-	-	≤ 2
16 QAM	≤ 2	≤ 2	>1	>3	-	-	≤ 1
16QAM	>2	>2	>3	>5	-	-	≤ 2

4.2 LTE CAT-M1 Antenna Design Guide

Users should connect antennas to SIM7000's antenna pads through micro-strip line or other types of RF trace and the trace impedance must be controlled in 50Ω. SIMCom recommends that the total insertion loss between the antenna pads and antennas should meet the following requirements:

Table 24: Trace loss

Frequency	Loss
700MHz-960MHz	<0.5dB
1710MHz-2170MHz	<0.9dB
2300MHz-2650MHz	<1.2dB

To facilitate the antenna tuning and certification test, a RF connector and an antenna matching circuit should be added. The following figure is the recommended circuit.

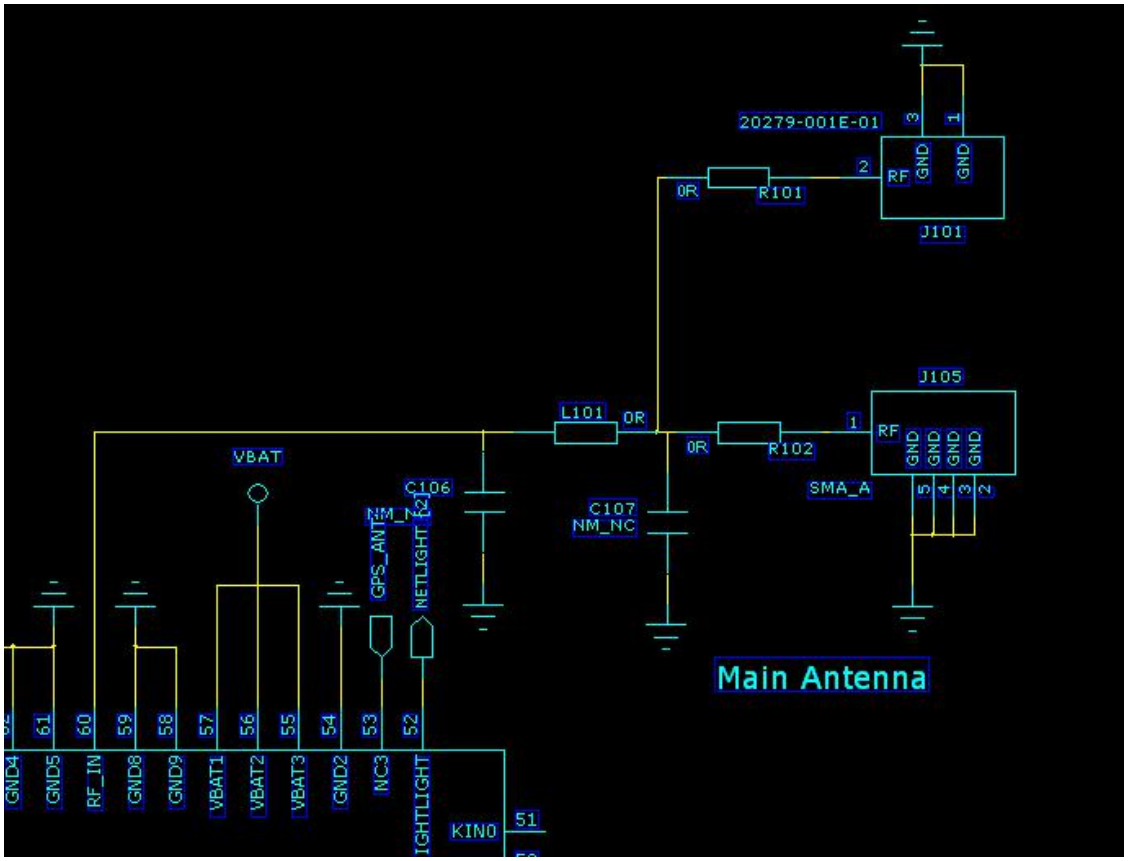

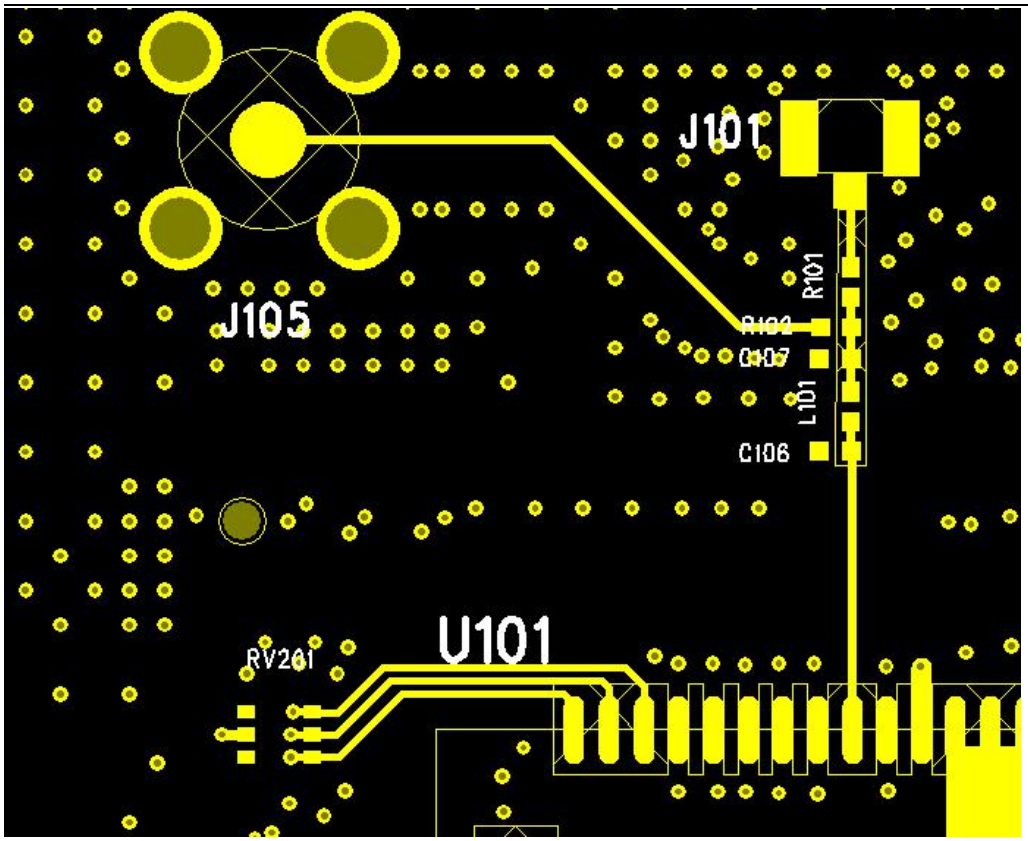

Figure 28: Antenna matching circuit (MAIN_ANT)

In figure 28, the components L101,C106,C107 and R101 or R102 are used for antenna matching, the values of components can only be achieved after the antenna tuning and usually provided by antenna vendor. By default, the L101,R101or R102 are 0Ω resistors, and the C106, C107 are reserved for tuning. The RF test connector is used for the conducted RF performance test, and should be placed as close as to the module's MAIN_ANT pin. The traces impedance between SIM7000 and antenna must be controlled in 50Ω.

4.3 GNSS

SIM7000 merges GNSS (GPS/GLONASS/BD) satellite and network information to provide a high-availability solution that offers industry-leading accuracy and performance. This solution performs well, even in very challenging environmental conditions where conventional GNSS receivers fail, and provides a platform to enable wireless operators to address both location-based services and emergency mandates.

4.3.1 GNSS Technical specification

- Tracking sensitivity: -162 dBm（GPS）/-158 dBm（GLONASS）/TBD (BD)
- Cold-start sensitivity: -148 dBm

- Accuracy (Open Sky): 2.5m (CEP50)
- TTFF (Open Sky) : Hot start <1s, Cold start<35s
- Receiver Type: 16-channel, C/A Code
- GPS L1 Frequency: 1575.42±1.023MHz
- GLONASS: 1597.5~1605.8 MHz
- BD: 1559.05~1563.14 MHz
- Update rate: Default 1 Hz
- GNSS data format: NMEA-0183
- GNSS Current consumption : 100mA (GSM/LTE CAT-M1Sleep ,in total on VBAT pins)
- GNSS antenna: Passive/Active antenna

Note: If the antenna is active type, the power should be given by main board because there is no power supply on the GPS antenna pad. If the antenna is passive, it is suggested that the external LNA should be used.

4.3.2 GNSS Application Guide

Users can adopt an active antenna or a passive antenna to SIM7000. If using a passive antenna, an external LNA is a must to get better performance. The following figures are the reference circuits.

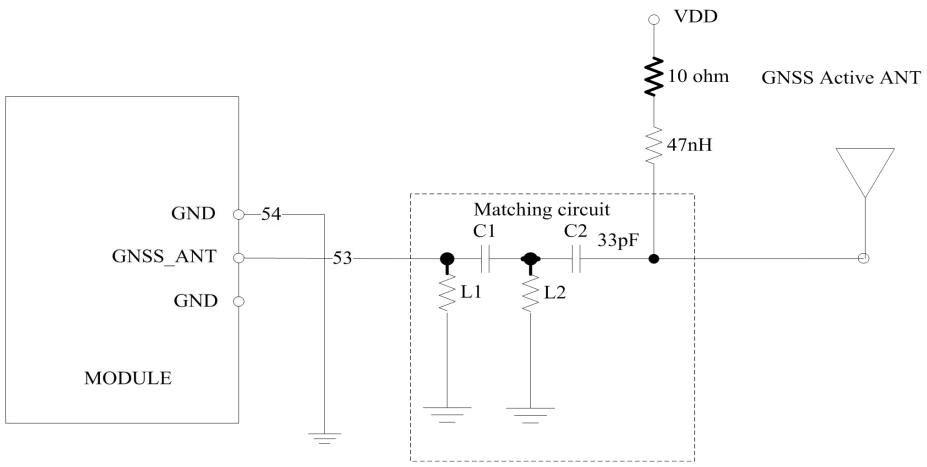

Figure 29: Active antenna circuit

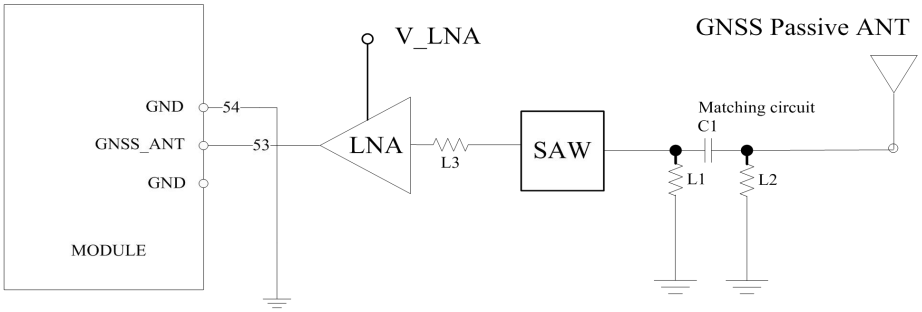

Figure 30: Passive antenna circuit (Default)

In above figures, the components C1, L1 and L2 are used for antenna matching. Usually, the values of the components can only be achieved after antenna tuning and usually provided by antenna vendor. C2 is used for DC blocking. L3 is the matching component of the external LNA, and the value of L3 is determined by the LNA characteristic and PCB layout. Both VDD of active antenna and V_LNA need external power supplies which should be considered according to active antenna and LNA characteristic. LDO/DCDC is recommended to get lower current consuming by shutting down active antennas and LNA when GNSS is not working.

GNSS can be tested by NMEA port. NMEA sentences can be obtained through UART or USB automatically. NMEA sentences include GSV, GGA, RMC, GSA, and VTG. Before using GNSS, user should configure SIM7000 in proper operating mode by AT command. Please refer to related documents for details. SIM7000 can also get position location information through AT directly.

Note:

1. ***GNSS is closed by default and can be started by "AT+CGNSPWR=1". The AT command has two parameters, the first is on/off, and the second is GNSS mode. Default mode is standalone mode.***

AGPS mode needs more support from the mobile telecommunication network. Please refer to document [24] for more details.

2. If the passive antenna is used, put the LNA close to the antenna.

3. ***Make sure there are no noise signals around GNSS antenna.***

5 Electrical Specifications

5.1 Absolute maximum ratings

Absolute maximum rating for digital and analog pins of SIM7000 are listed in the following table:

Table 26: Absolute maximum ratings

Parameter	Min.	Typ.	Max.	Unit
Voltage at VBAT	-0.5	-	6.0	V
Voltage at USB_VBUS	-0.5	-	5.85	V
Voltage at digital pins (RESET,GPIO,I2C,UART,PCM)	-0.3	-	2.1	V
Voltage at digital pins (SIM)	-0.3	-	3.05	V
Voltage at PWRKEY	-0.3	-	1.8	

5.2 Operating conditions

Table 27: Recommended operating ratings

Parameter	Min.	Typ.	Max.	Unit
Voltage at VBAT	3.0	3.8	4.3	V
Voltage at USB_VBUS	3.5	5.0	5.25	V

Table 28: 1.8V Digital I/O characteristics*

Parameter	Description	Min.	Typ.	Max.	Unit
V_{IH}	High-level input voltage	1.17	1.8	2.1	V
V_{IL}	Low-level input voltage	-0.3	0	0.63	V
V_{OH}	High-level output voltage	1.35	-	1.8	V
V_{OL}	Low-level output voltage	0	-	0.45	V
I_{OH}	High-level output current(no pull down resistor)	-	2	-	mA
I_{OL}	Low-level output current(no pull up resistor)	-	-2	-	mA
I_{IH}	Input high leakage current (no pull down resistor)	-	-	1	uA
I_{IL}	Input low leakage current(no pull up resistor)	-1	-	-	uA

Note: These parameters are for digital interface pins, such as GPIOs (including NETLIGHT,STATUS,SIM_DET), I2C, UART, PCM, MDM_LOG_TX and BOOT_CFG.

The operating temperature of SIM7000 is listed in the following table.

Table 29: Operating temperature

Parameter	Min.	Typ.	Max.	Unit
Normal operation temperature	-30	25	80	℃
Extended operation temperature*	-40	25	85	℃
Storage temperature	-45	25	+90	℃

Note: Module is able to make and receive voice calls, data calls, SMS and make GSM/LTE CAT-M1traffic in -40℃ ~ +85℃. The performance will be reduced slightly from the 3GPP specifications if the temperature is outside the normal operating temperature range and still within the extreme operating temperature range.

5.3 Operating Mode

5.3.1 Operating Mode Definition

The table below summarizes the various operating modes of SIM7000 product.

Table 30: Operating mode Definition

Mode		Function
Normal operation	LTE CAT-M1Sleep	In this case, the current consumption of module will be reduced to the minimal level and the module can still receive paging message and SMS.
	/LTE CAT-M1Idle	Software is active. Module is registered to the network, and the module is ready to communicate.
	LTE CAT-M1Talk	Connection between two subscribers is in progress. In this case, the power consumption depends on network settings such as DTX off/on, FR/EFR/HR, hopping sequences, and antenna.
	LTE CAT-M1Standby	Module is ready for data transmission, but no data is currently sent or received. In this case, power consumption depends on network settings.
	LTEData transmission	There is data transmission in progress. In this case, power consumption is related to network settings (e.g. power control level); uplink/downlink data rates, etc.
Minimum functionality mode		AT command “AT+CFUN=0” AT+CSCLK=1 can be used to set the module to a minimum functionality mode without removing the power supply. In this mode, the RF part of the module will not work and the SIM card will not be accessible, but the serial port and USB port are still accessible. The power consumption in this mode is lower

	than normal mode.
Flight mode	AT command "AT+CFUN=4" can be used to set the module to flight mode without removing the power supply. In this mode, the RF part of the module will not work, but the serial port and USB port are still accessible. The power consumption in this mode is lower than normal mode.
PSM mode	Setting the timer of the software can be entered PSM mode. In this mode, the module will be the least current consumption. Meanwhile, all the output of the LDO and DCDC in the module will be closed except the RTC power. And also all of the functions will be unavailable except the RTC function. RTC timer can wake up the module.
Power off mode	Module will go into power off mode by sending the AT command "AT+CPOWD" or pull down the PWRKEY pin, normally. In this mode the power management unit shuts down the power supply, and software is not active. The serial port and USB are is not accessible.

5.3.2 Sleep mode

In sleep mode, the current consumption of module will be reduced to the minimal level, and module can still receive paging message and SMS.
Several hardware and software conditions must be satisfied together in order to let SIM7000 enter sleep mode:
1. UART condition
2. USB condition
3. Software condition
Note: Before designing, pay attention to how to realize sleeping/waking function and refer to Document [26] for more details.

5.3.3 Minimum functionality mode and Flight mode

Minimum functionality mode ceases a majority function of the module, thus minimizing the power consumption. This mode is set by the AT command which provides a choice of the functionality levels.

- AT+CFUN=0: Minimum functionality
- AT+CFUN=1: Full functionality (Default)
- AT+CFUN=4: Flight mode

If SIM7000 has been set to minimum functionality mode, the RF function and SIM card function will be closed. In this case, the serial port and USB are still accessible, but RF function and SIM card will be unavailable.
If SIM7000 has been set to flight mode, the RF function will be closed. In this case, the serial port and USB are still accessible, but RF function will be unavailable.

When SIM7000 is in minimum functionality or flight mode, it can return to full functionality by the AT command “AT+CFUN=1”.

5.4 Current Consumption

The current consumption is listed in the table below.

Table 31: Current consumption on VBAT Pins (VBAT=3.8V)

GNSS	
GNSS supply current (AT+CFUN=0,with USB connection)	Tracking Typical: 34mA
LTE CAT-M1sleep/idle mode	
LTE CAT-M1supply current (GNSS off， without USB connection)	Sleep mode Typical: 1mA Idle mode Typical: 11mA
LTE CAT-M1Talk	
TBD	TBD
TBD	TBD
LTE CAT-M1data	
LTE-FDD B2	@23dbm Typical: 160mA @10dbm Typical: 116mA @0dbm Typical: 102mA
LTE-FDD B4	@23dbm Typical: 168mA @10dbm Typical: 117mA @0dbm Typical: 113mA
LTE-FDD B12	@23dbm Typical: 167mA @10dbm Typical: 109mA @0dbm Typical: 96mA
LTE-FDD B13	@23dbm Typical: 167mA @10dbm Typical: 109mA @0dbm Typical: 98mA

5.5 ESD Notes

SIM7000 is sensitive to ESD in the process of storage, transporting, and assembling. When SIM7000 is mounted on the users' mother board, the ESD components should be placed beside the connectors which human body may touch, such as SIM card holder, audio jacks, switches, keys, etc. The following table shows the SIM7000 ESD measurement performance without any external ESD component.

Table 32: The ESD performance measurement table (Temperature: 25℃, Humidity: 45%)

Part	Contact discharge	Air discharge
VBAT,GND	+/-6K	+/-12K
Antenna port	+/-5K	+/-10K
USB	+/-4K	+/-8K
UART	+/-4K	+/-8K
Other PADs	+/-3K	+/-6K

6 SMT Production Guide

6.1 Top and Bottom View of SIM7000

Figure 31: Top and bottom view of SIM7000

6.2 Label Information

Figure 32: Label information

Table 33: The description of label information

No.	Description
A	LOGO
B	No.1 Pin
C	Project name
D	Product code
E	Serial number
F	International mobile equipment identity
G	QR code

6.3 Typical SMT Reflow Profile

SIMCom provides a typical soldering profile. Therefore the soldering profile shown below is only a generic recommendation and should be adjusted to the specific application and manufacturing constraints.

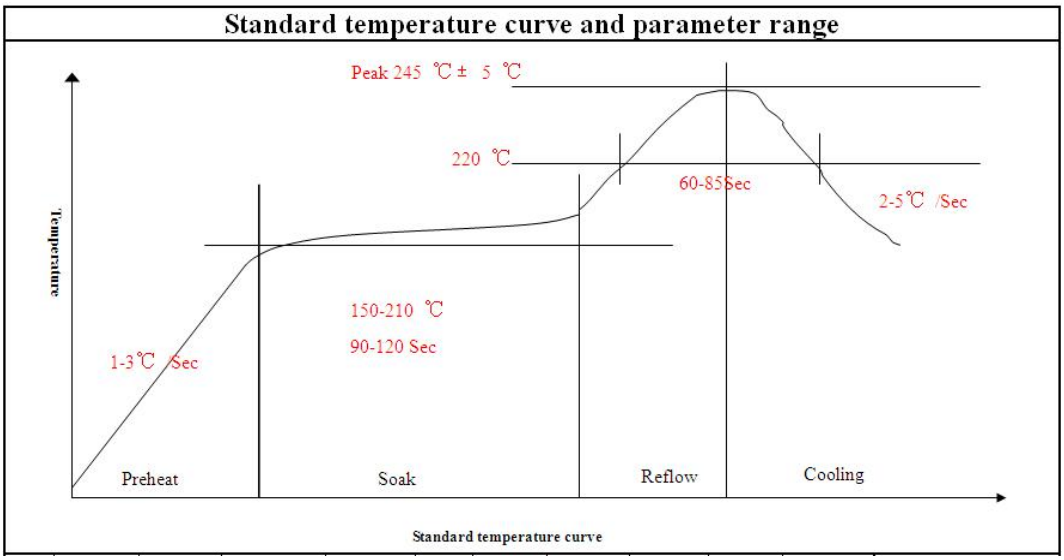

Figure 33: The ramp-soak-spike reflow profile of SIM7000

Note: For more details about secondary SMT, please refer to the document [21].

6.4 Moisture Sensitivity Level (MSL)

SIM7000 is qualified to Moisture Sensitivity Level (MSL) 3 in accordance with JEDEC J-STD-033. If the prescribed time limit is exceeded, users should bake modules for 192 hours in drying equipment (<5% RH) at 40+5/-0°C, or 72 hours at 85+5/-5°C. Note that plastic tray is not heat-resistant, and only can be baked at 45° C.

Table 34: Moisture Sensitivity Level and Floor Life

Moisture Sensitivity Level (MSL)	Floor Life (out of bag) at factory ambient≤30°C/60% RH or as stated
1	Unlimited at ≦30℃/85% RH
2	1 year
2a	4 weeks
3	168 hours
4	72 hours
5	48 hours
5a	24 hours
6	Mandatory bake before use. After bake, it must be reflowed within the

	time limit specified on the label.

NOTE: IPC / JEDEC J-STD-033 standard must be followed for production and storage.

6.5 Stencil Foil Design Recommendation

The recommended thickness of stencil foil is 0.15mm.

7 Packaging

7.1 tray packaging

SIM7000 module support tray packaging (default packaging).

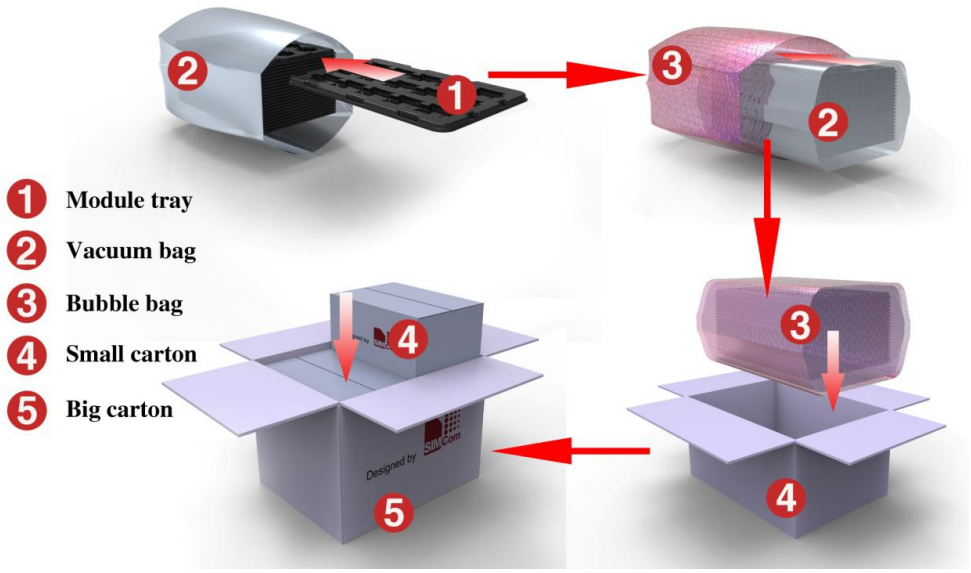

Figure 34: packaging diagram

Module tray drawing：

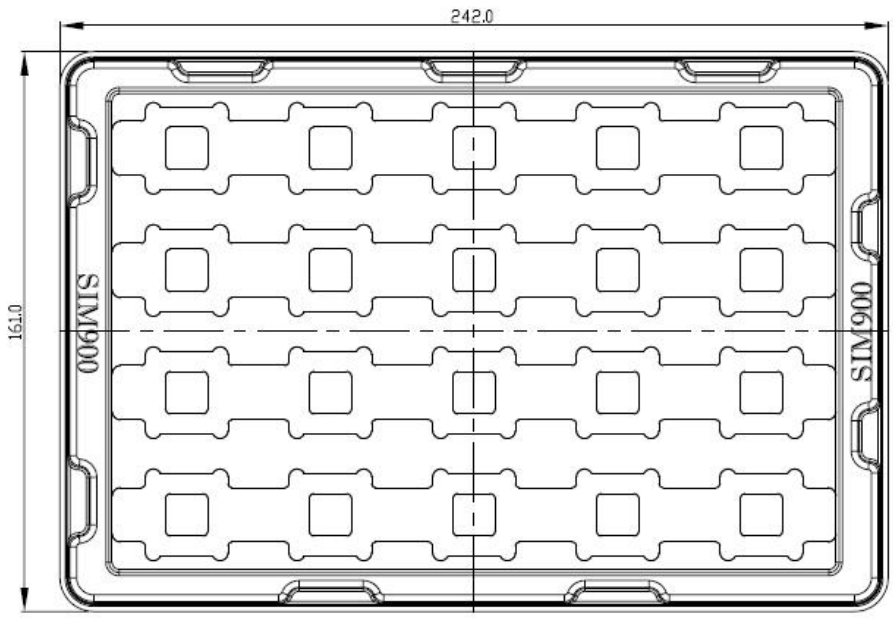

Figure 35: Tray drawing

Table 35: Tray size

Length（±3mm）	Width（±3mm）	Module number
242.0	161.0	20

Small carton drawing：

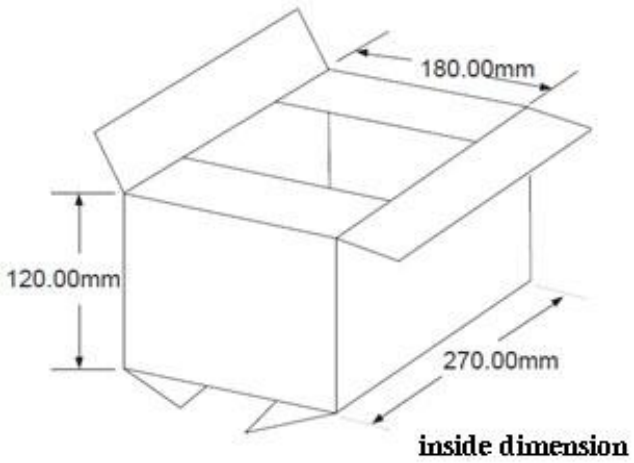

Figure 36: Small carton drawing

Table 36: Small Carton size

Length（±10mm）	Width（±10mm）	Height（±10mm）	Module number
270	180	120	20*20=400

Big carton drawing：

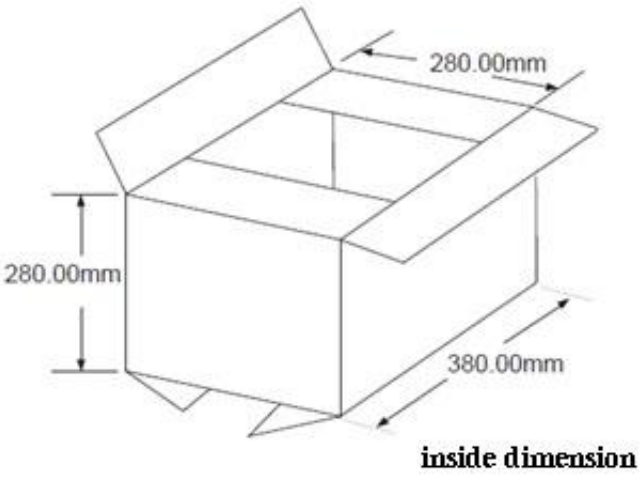

Figure 37: Big carton drawing

Table 37: Big Carton size

Length（±10mm）	Width（±10mm）	Height（±10mm）	Module number
380	280	280	400*4=1600

Appendix

A. Reference Design

Refer to < SIM7000 Reference Design V1.01> for the details.

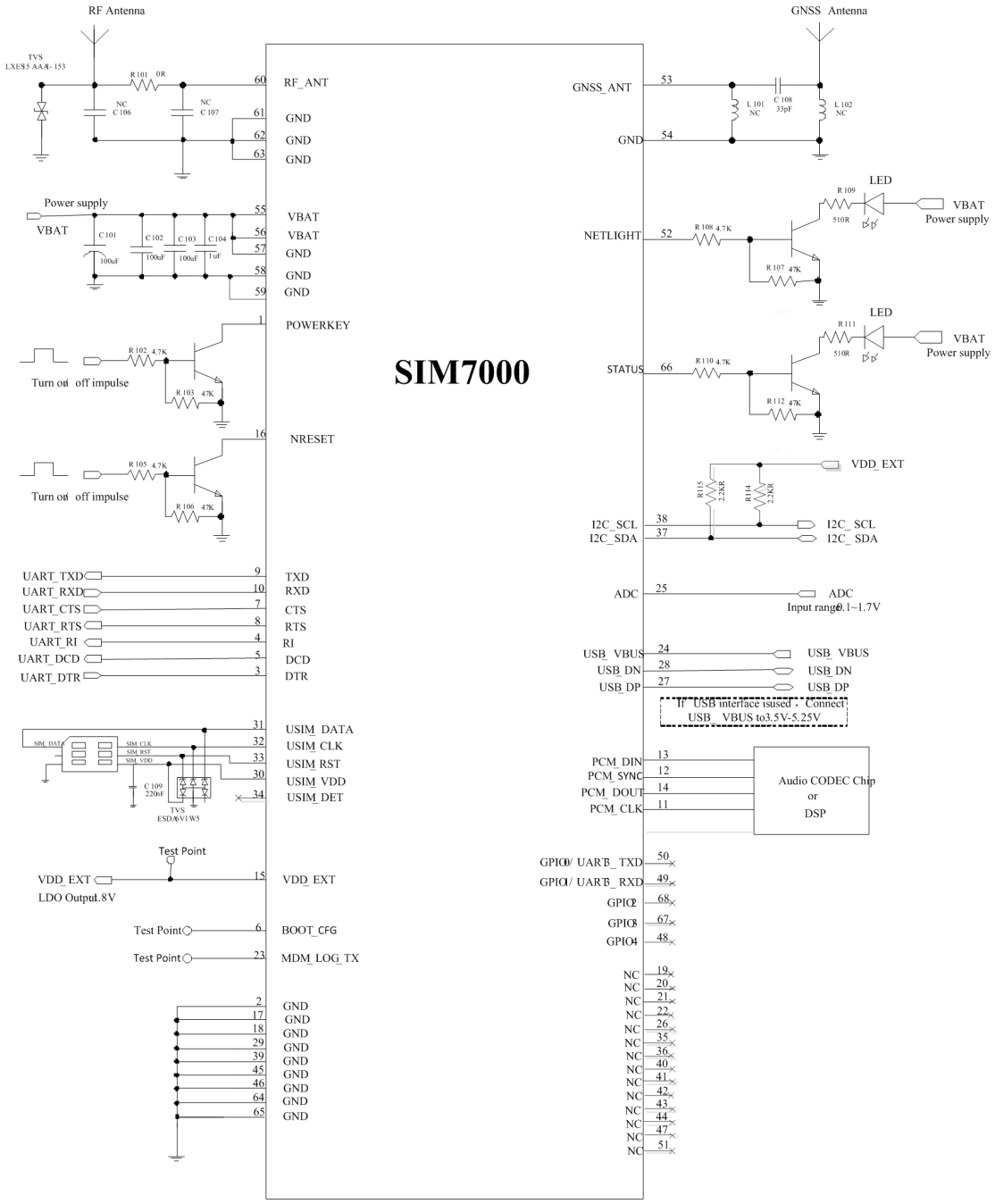

Figure 38: Reference design

B. Related Documents

Table 38: Related Documents

NO.	Title	Description
[1]	SIM7X00 Series_AT Command Manual_V1.xx	AT Command Manual
[2]	ITU-T Draft new recommendationV.25ter	Serial asynchronous automatic dialing and control
[3]	GSM 07.07	Digital cellular telecommunications (Phase 2+); AT command set for GSM Mobile Equipment (ME)
[4]	GSM 07.10	Support GSM 07.10 multiplexing protocol
[5]	GSM 07.05	Digital cellular telecommunications (Phase 2+); Use of Data Terminal Equipment – Data Circuit terminating Equipment (DTE – DCE) interface for Short Message Service (SMS) and Cell Broadcast Service (CBS)
[6]	GSM 11.14	Digital cellular telecommunications system (Phase 2+); Specification of the SIM Application Toolkit for the Subscriber Identity Module – Mobile Equipment (SIM – ME) interface
[7]	GSM 11.11	Digital cellular telecommunications system (Phase 2+); Specification of the Subscriber Identity Module – Mobile Equipment (SIM – ME) interface
[8]	GSM 03.38	Digital cellular telecommunications system (Phase 2+); Alphabets and language-specific information
[9]	GSM 11.10	Digital cellular telecommunications system (Phase 2) ; Mobile Station (MS) conformance specification ; Part 1: Conformance specification
[10]	3GPP TS 51.010-1	Digital cellular telecommunications system (Release 5); Mobile Station (MS) conformance specification
[11]	3GPP TS 34.124	Electromagnetic Compatibility (EMC) for mobile terminals and ancillary equipment.
[12]	3GPP TS 34.121	Electromagnetic Compatibility (EMC) for mobile terminals and ancillary equipment.
[13]	3GPP TS 34.123-1	Technical Specification Group Radio Access Network; Terminal conformance specification; Radio transmission and reception (FDD)
[14]	3GPP TS 34.123-3	User Equipment (UE) conformance specification; Part 3: Abstract Test Suites.
[15]	EN 301 908-02 V2.2.1	Electromagnetic compatibility and Radio spectrum Matters (ERM); Base Stations (BS) and User Equipment (UE) for IMT-2000. Third Generation cellular networks; Part 2: Harmonized EN for IMT-2000, CDMA Direct Spread (UTRA FDD) (UE) covering essential requirements of article 3.2 of the R&TTE Directive
[16]	EN 301 489-24 V1.2.1	Electromagnetic compatibility and Radio Spectrum Matters (ERM); Electromagnetic Compatibility (EMC) standard for radio equipment and services; Part 24: Specific conditions for IMT-2000 CDMA Direct Spread (UTRA) for Mobile and portable (UE) radio and ancillary equipment
[17]	IEC/EN60950-1(2001)	Safety of information technology equipment (2000)

[18]	3GPP TS 51.010-1	Digital cellular telecommunications system (Release 5); Mobile Station (MS) conformance specification
[19]	GCF-CC V3.23.1	Global Certification Forum - Certification Criteria
[20]	2002/95/EC	Directive of the European Parliament and of the Council of 27 January 2003 on the restriction of the use of certain hazardous substances in electrical and electronic equipment (RoHS)
[21]	Module secondary-SMT-UGD-V1.xx	Module secondary SMT Guidelines
[22]	SIM7X00 Series_UART_Application Note_V1.xx	This document describes how to use UART interface of SIMCom modules.
[23]	SIM7X00 Series_USB AUDIO_Application Note_V1.xx	USB AUDIO Application Note
[24]	SIM7X00 Series_GPS_Application Note_V1.xx	GPS Application Note
[25]	Antenna design guidelines for diversity receiver system	Antenna design guidelines for diversity receiver system
[26]	SIM7X00 Series_Sleep Mode_ Application Note_V1.xx	Sleep Mode Application Note

C. Terms and Abbreviations

Table 39: Terms and Abbreviations

Abbreviation	Description
ADC	Analog-to-Digital Converter
ARP	Antenna Reference Point
BER	Bit Error Rate
BD	BeiDou
BTS	Base Transceiver Station
CS	Coding Scheme
CSD	Circuit Switched Data
CTS	Clear to Send
DAC	Digital-to-Analog Converter
DRX	Discontinuous Reception
DSP	Digital Signal Processor
DTE	Data Terminal Equipment (typically computer, terminal, printer)
DTR	Data Terminal Ready
DTX	Discontinuous Transmission
EFR	Enhanced Full Rate
EGSM	Enhanced GSM
EMC	Electromagnetic Compatibility
ESD	Electrostatic Discharge
ETS	European Telecommunication Standard
EVDO	Evolution Data Only
FCC	Federal Communications Commission (U.S.)
FD	SIM fix dialing phonebook
FDMA	Frequency Division Multiple Access
FR	Full Rate
GMSK	Gaussian Minimum Shift Keying
GNSS	Global Navigation Satellite System
GPRS	General Packet Radio Service
GPS	Global Positioning System
GSM	Global Standard for Mobile Communications
HR	Half Rate
HSPA	High Speed Packet Access
I2C	Inter-Integrated Circuit
IMEI	International Mobile Equipment Identity
LTE	Long Term Evolution
MO	Mobile Originated
MS	Mobile Station (GSM engine), also referred to as TE
MT	Mobile Terminated
NMEA	National Marine Electronics Association
PAP	Password Authentication Protocol
PBCCH	Packet Switched Broadcast Control Channel
PCB	Printed Circuit Board

PCS	Personal Communication System, also referred to as GSM 1900
RF	Radio Frequency
RMS	Root Mean Square (value)
RTC	Real Time Clock
SIM	Subscriber Identification Module
SMS	Short Message Service
SMPS	Switched-mode power supply
TDMA	Time Division Multiple Access
TE	Terminal Equipment, also referred to as DTE
TX	Transmit Direction
UART	Universal Asynchronous Receiver & Transmitter
VSWR	Voltage Standing Wave Ratio
SM	SIM phonebook
NC	Not connect
EDGE	Enhanced data rates for GSM evolution
HSDPA	High Speed Downlink Packet Access
HSUPA	High Speed Uplink Packet Access
ZIF	Zero intermediate frequency
WCDMA	Wideband Code Division Multiple Access
VCTCXO	Voltage control temperature-compensated crystal oscillator
SIM	Universal subscriber identity module
UMTS	Universal mobile telecommunications system
UART	Universal asynchronous receiver transmitter
PSM	Power save mode

D. Safety Caution

Table 40: Safety Caution

Marks	Requirements
	When in a hospital or other health care facility, observe the restrictions about the use of mobiles. Switch the cellular terminal or mobile off, medical equipment may be sensitive and not operate normally due to RF energy interference.
	Switch off the cellular terminal or mobile before boarding an aircraft. Make sure it is switched off. The operation of wireless appliances in an aircraft is forbidden to prevent interference with communication systems. Forgetting to think much of these instructions may impact the flight safety, or offend local legal action, or both.
	Do not operate the cellular terminal or mobile in the presence of flammable gases or fumes. Switch off the cellular terminal when you are near petrol stations, fuel depots, chemical plants or where blasting operations are in progress. Operation of any electrical equipment in potentially explosive atmospheres can constitute a safety hazard.
	Your cellular terminal or mobile receives and transmits radio frequency energy while switched on. RF interference can occur if it is used close to TV sets, radios, computers or other electric equipment.
	Road safety comes first! Do not use a hand-held cellular terminal or mobile when driving a vehicle, unless it is securely mounted in a holder for hands free operation. Before making a call with a hand-held terminal or mobile, park the vehicle.
	GSM cellular terminals or mobiles operate over radio frequency signals and cellular networks and cannot be guaranteed to connect in all conditions, especially with a mobile fee or an invalid SIM card. While you are in this condition and need emergent help, please remember to use emergency calls. In order to make or receive calls, the cellular terminal or mobile must be switched on and in a service area with adequate cellular signal strength. Some networks do not allow for emergency call if certain network services or phone features are in use (e.g. lock functions, fixed dialing etc.). You may have to deactivate those features before you can make an emergency call. Also, some networks require that a valid SIM card be properly inserted in the cellular terminal or mobile.

Contact us:

Shanghai SIMCom Wireless Solutions Ltd.

Add: SIM Technology Building, No.633, Jinzhong Road, Changning District, Shanghai P.R. China 200335

Tel：+86 21 3235 3300

Fax：+86 21 3235 3020

URL：www.simcomm2m.com