ULTRALOQ

ULTRALOQ Bolt Fingerprint

Installation and User Guide

(V2.0)

Smart Lock

Bolt-F Matter, Bolt-N Matter

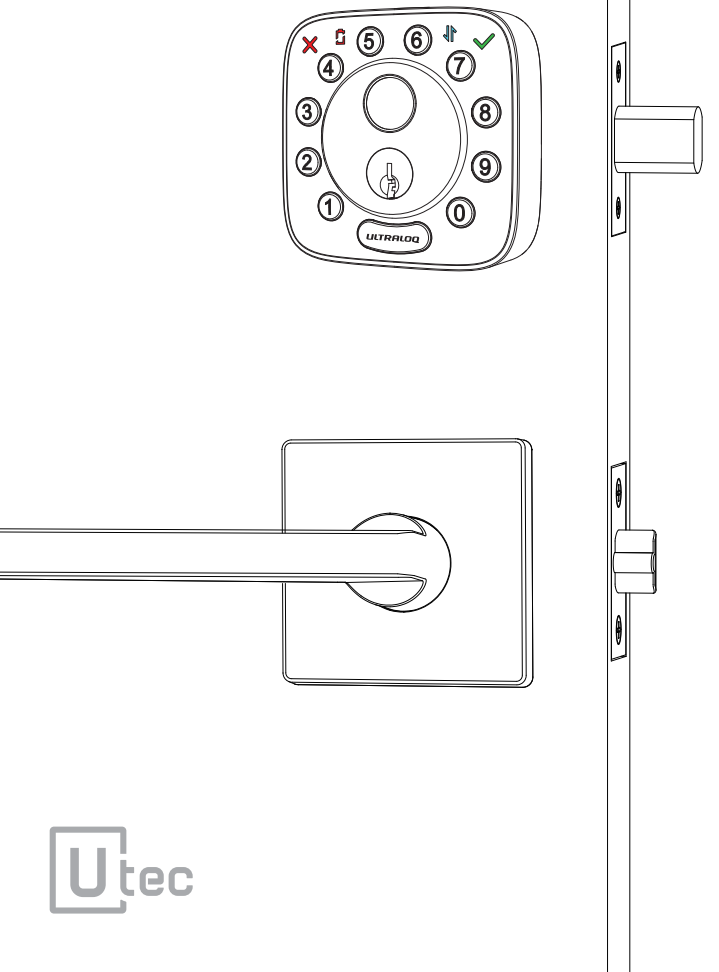

Utec

Important Notes

• Do not use a power drill for installation.
• Install and test the lock with the door open to avoid being locked out.
• Please read all the instructions before contacting customer support.
• Please contact customer support before returning the product to the store.
• Do not install the batteries before installing the lock!
• Follow the instructions in sequential order!
• This lock is designed for the following operating temperatures:
Outside: -4 °F(-20 °C) to 149 °F (65 °C)
Inside: 14 °F (-10 °C) to 131 °F (55 °C)

Note:The Exterior Assembly of ULTRALOQ Bolt Fingerprint is waterproof, but the Interior Assembly is not waterproof at all due to the battery box.

• Suggest to use AA Alkaline Battery, or manufacture suggested Lithium Battery. Don't use Rechargeable Battery.

Statements

To ensure the best service, please register your account at **www.u-tec.com/register.html**

ULTRALOQ Terms & Policies

Before using all ULTRALOQ products, please read all applicable terms, rules, policies and usage provisions found at **www.u-tec.com/company/privacy.** By using your ULTRALOQ, you agree to be bound by the U-tec Privacy Policy.

Need Help?

For technical documents and more

Please visit **support.u-tec.com**

Packing List

ENGLISH

Interior Assembly

Exterior Assembly

Interior Assembly Mounting Plate

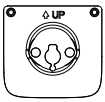

Strike

Bolt

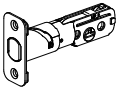

Screw A

Screw B

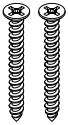

Screw C

Screw D

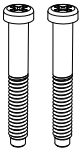

Screw E

Screw F

AA Alkaline Batteries

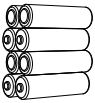

May not be included for some regions

User Guide

Drill Template

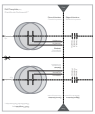

Reset Needle

Door Sensor

Backup Key

Installation Guide

Installation Video

Please scan this QR code to watch the easy step by step installation video before attempting to install ULTRALOQ.

Or you can also view the webiste directly.
www.u-tec.com/lock/Bolt_F_WiFi/guide

1. Preparing Door

Check the door's dimensions.

Step 1

Measure to confirm that the door is between 1⅜"~ 1¾" (35 mm-45 mm) thick.

If your door is thicker than 1¾", please visit support.u-tec.com to get help.

Step 2

Measure to confirm that the diameter of the hole is 2⅛" (53 mm) or 1½" (38 mm)

Step 3

Measure to confirm that the backset is either 2⅜" or 2¾" (60 mm or 70 mm).

Step 4

Measure to confirm that the diameter of the hole in the door edge is 1" (25 mm).

Step 5

Measure to confirm the depth of the hole in the frame is at least 1"(25 mm).

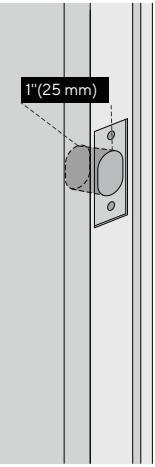

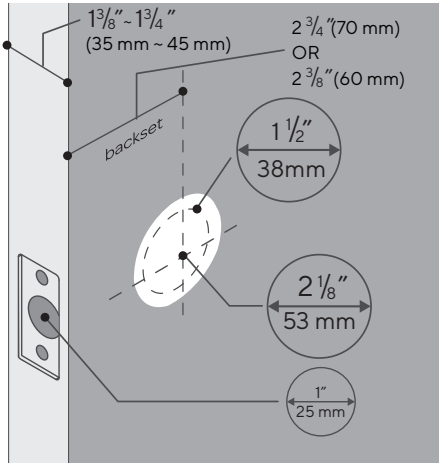

If you have a new door, please drill the holes according to Drill Template.

2. Installing Bolt and Strike

Step 1

Install Bolt into the door. Make sure the UP ↑ icon goes up.

> Note: Bolt is set for 2 3/8 ” backset initially. It can be adjusted to 2 3/4 ” if needed.
> To adjust it please make sure the bolt is retracted, then, press it, twist and pull it or push it to your desired length.

ENGLISH

Step 2

Install Strike into the door frame.

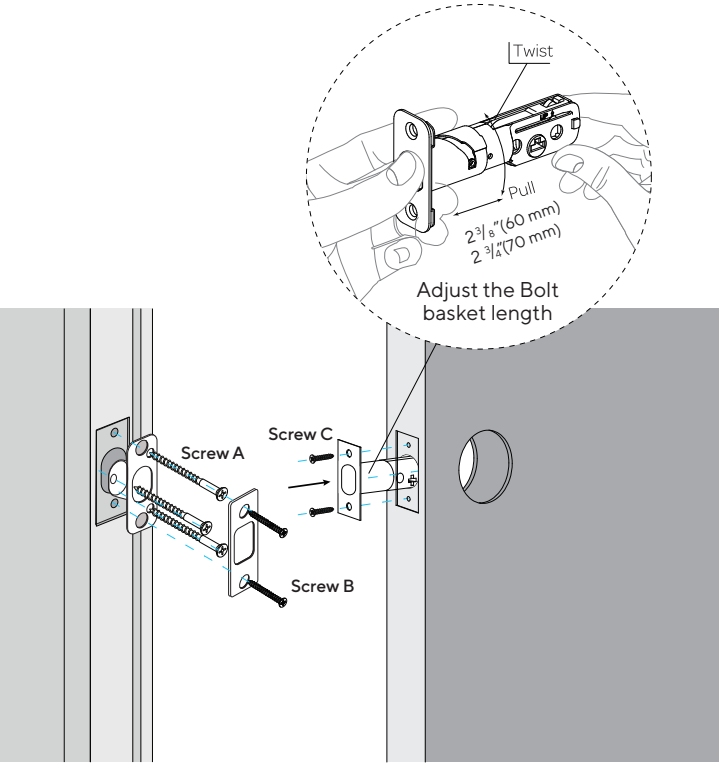

3. Installing Exterior Assembly

Step 1

Keep Bolt ***retracted*** and the cylinder tailpiece ***horizontal***. Install Exterior Assembly. Please ***do not*** insert the mechanical key during installation .

Step 2

Align its two sticks with two holes on Bolt. The cable goes through the hole ***below*** Bolt.

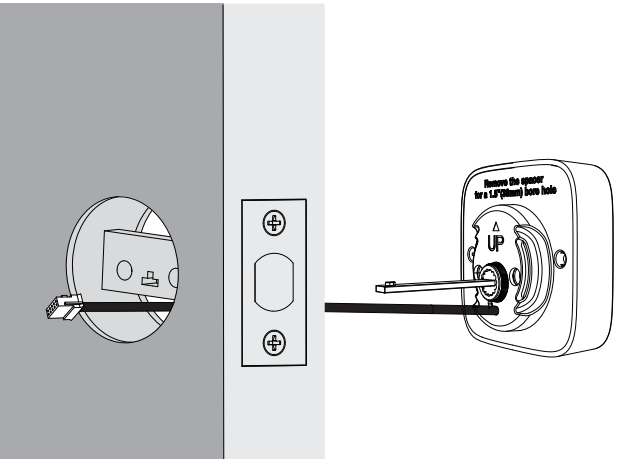

If your door has a 1½"(38 mm) bore hole, remove the spacer as shown.

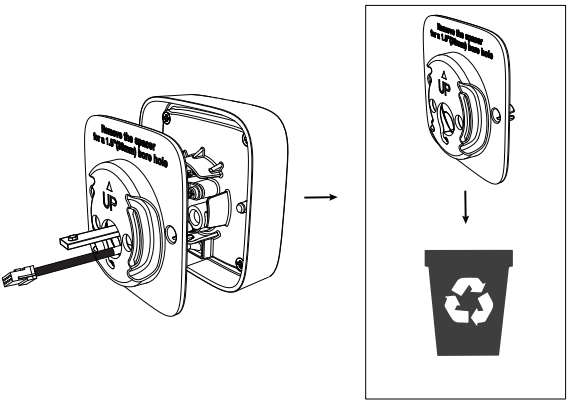

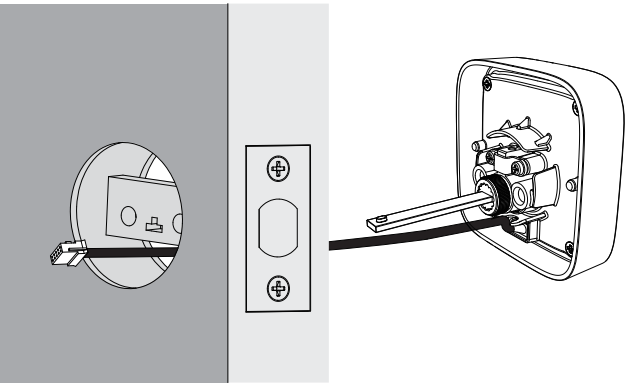

4. Installing Interior Assembly Mounting Plate

Step 1

Route the cable through the hole on Interior Assembly Mounting Plate.

Step 2

Secure Interior Assembly Mounting Plate to Exterior Assembly using Screws D.

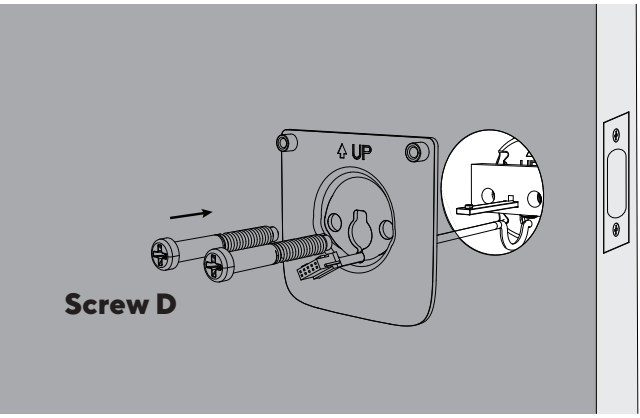

5. Installing Interior Assembly

Warning: Please do not install the batteries before installing interior assembly, otherwise the keypad may not be powered on.

Step 1

Remove the battery cover of the Interior Assembly.

Step 2

Insert the connector of the cable to the socket on Interior Assembly. When you plug the connector, please make sure the black teeth faces up. Press the connector in firmly until it is completed seated.

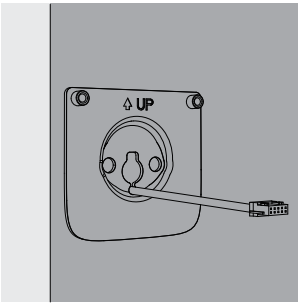

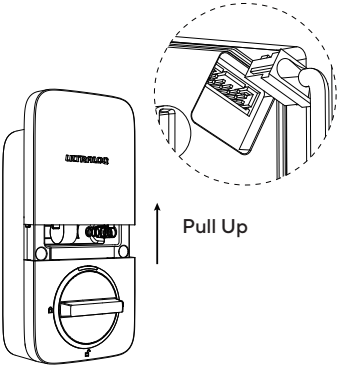

Step 3

Rotate the knob and keep it in a ***vertical*** position to stay unlocked.

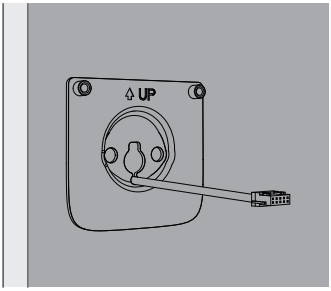

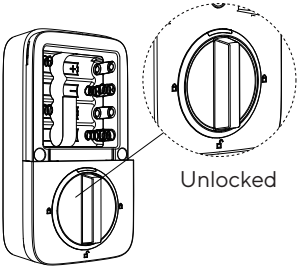

Step 4

Attach Interior Assembly to Mounting Plate and tighten 2 Screws E.

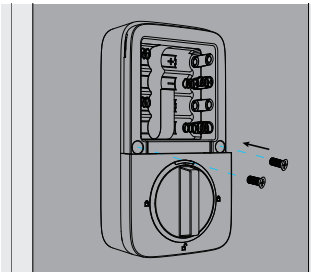

6. Installing the Batteries and Performing the Door Handing Process

This step will teach your lock the orientation of your door and is crucial to lock operation.

Step 1

Rotate the turn and keep it in a vertical position to stay unlocked.

Step 2

Insert 8 AA Alkaline Batteries and keep the batteries on the battery pull tab. Then install the battery cover.

ENGLISH

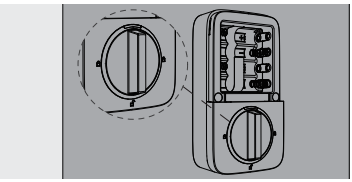

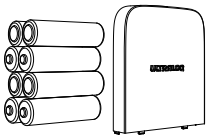

Note： Any Fingerprint or pressing any digit button for 4 times can unlock ULTRALOQ Bolt Fingerprint in Factory Default Mode.

Step 3

Direction calibration: Please keep Bolt unlocked and press and hold the number 5 until you hear two short beeps, then the lock will rotate to start the direction self-calibration.
To avoid deadbolt jamming, please note that this step should be done after the lock is installed on the door.

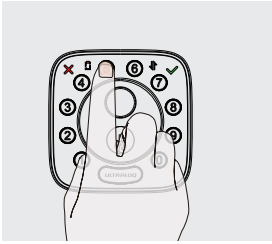

7. Installing the Door Sensor(Optional)

The door sensor lets you know whether the door is open or closed through the App. When the auto lock is enabled in the App, your ULTRALOQ will only lock it self when the door is closed.

Please do not mount the door sensor on the keypad side.

Please do not mount the door sensor on the kind of metal door that interferes with the magnet inside the door sensor (In this case, the door sensor sticks to the metal door magnetically).
The door sensor can be installed on the wooden door or the kind of metal door that will not interfere with the door sensor (In this case, the door sensor will not stick to the door magnetically).

Option 1 Installing with Sticker

Peel off either side of the sticker and push it against the door frame about 10s. Peel off the other side and secure the door sensor on the sticker firmly. Put on the door sensor cover at last.

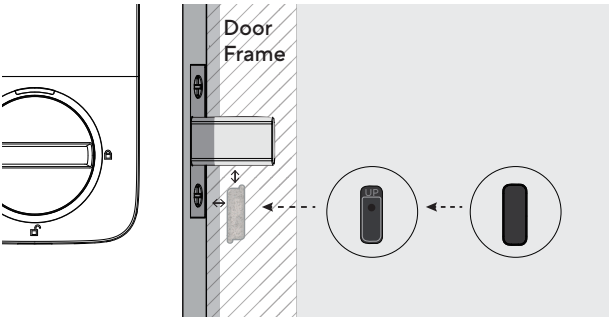

Option 2 Installing with Screw F

Push the door sensor against the wall and secure it with Screw F. You may need to drill a hole first if the door frame is hard to screw in with Screw F directly. Put on the door sensor cover at last.

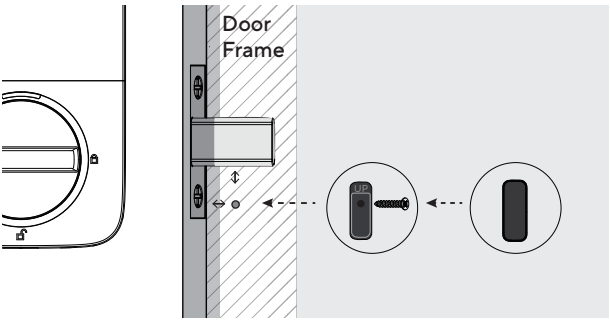

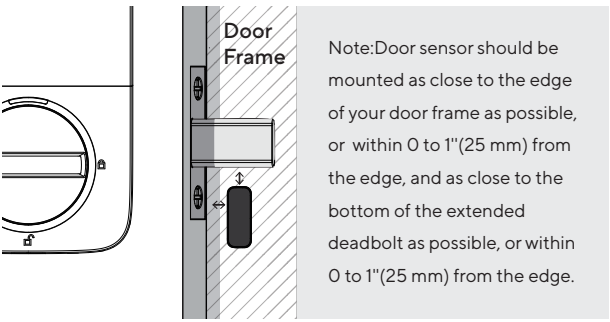

Note:Door sensor should be mounted as close to the edge of your door frame as possible, or within 0 to 1"(25 mm) from the edge, and as close to the bottom of the extended deadbolt as possible, or within 0 to 1"(25 mm) from the edge.

Note: Please refer to the guide in U-tec App for more information.

User Guide

User Guide Video

Please watch our easy step by step User Guide video on the left before attempting to use your ULTRALOQ Bolt Fingerprint Smart Lock(Or you can also view the webiste directly.www.u-tec.com/lock/Bolt_F_WiFi/guide).

ENGLISH

For the configuration guide of integration (such as Alexa, etc.), please check the QR code on the right
(or visit:
https://support.u-tec.com/hc/en-us/categories/360005956492)

1. Product Overview

1.1 Exterior

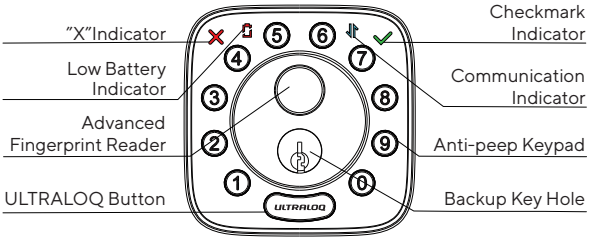

Anti-peep Keypad
Used to enter the code and unlock from outside.

Advanced Fingerprint Reader
Used to verify your finger and unlock from the outside.

Checkmark Indicator
It will light on when manual programming is successful or your entry verification is correct.

"X"Indicator
It will light on when your manual programming is failed or your entry verification is wrong.

Communication Indicator
It will splash when the lock is communicating with your App or Internet.

Low Battery Indicator
It will light on when the battery is low.

Backup Key Hole
Used to insert the key to unlock in emergency situations.

ULTRALOQ Button
Used to lock from the outside, illuminate the keypad for code entry and confirm previous operation etc.

1.2 Interior

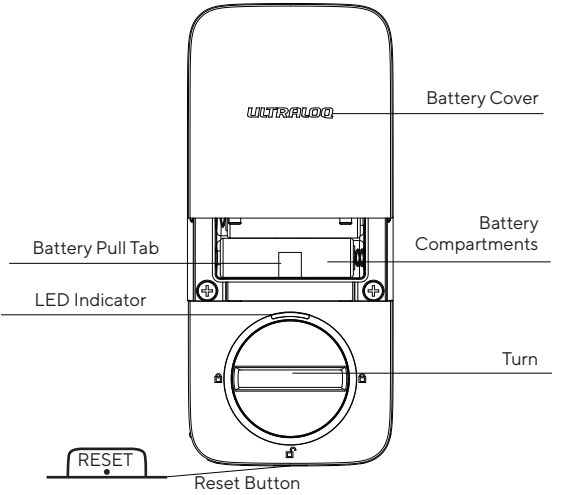

Reset Button
Used to reset the lock to Factory Default settings.
If the lock was paired to App, please must click "Remove Device" to remove the device from App.

Battery Pull Tab
Use the battery pull tab to lift and remove the batteries from the battery box.

Battery Compartments
Used to insert 8 AA Alkaline Battery, or manufacture suggested Lithium Battery. Don't use Rechargeable Battery.

Battery Cover
Used to cover batteries and product label.

Turn
Used to unlock and lock the door from inside.

LED Indicator
Turns red when door is unlocked.

1.3 Low Battery Alarm
There will be low battery alert on the lock and App when battery is low. The Low Battery Indicator will light on when the lock is activated. Please replace batteries.

2. Lock Setup

ENGLISH

Scan QR code to download the App

Download on the App Store

Google Play

Step 1
Scan above QR code to download the App, or search "U-tec"in App Store (iOS) and Google Play (Android).

Step 2
Open the App, register U-tec account and log in the account.

Step 3
Make sure the lock is in ***Factory Default Mode***. Turn on Bluetooth on your smartphone, stay near the lock (within 10 feet) and search the lock in the App. If you want to reset your lock to Factory Default Mode, Please check the page 14.

Step 4
Pair the lock in the App and start to use it.

Note: Please refer to the guide in U-tec App for more information.

DON'T WANT TO USE THE APP?
Please go to page 16 for programming guide for Standalone Mode.

3. Using Your Lock

3.1 Unlock From Outside

- **User Code**
  Enter 4-8 digit code and press ULTRALOQ Button to unlock .

- **Fingerprint**
  Place your finger on Fingerprint Reader to unlock.

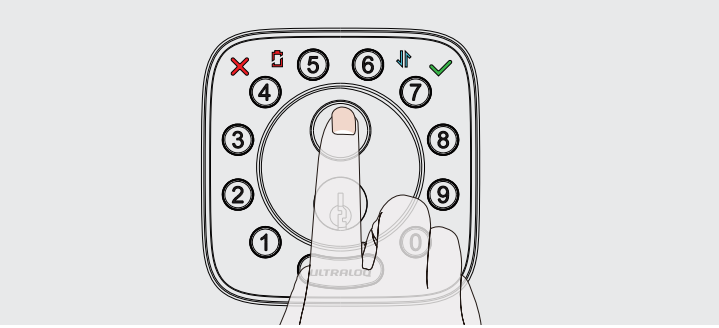

- **Smartphone**
  Use your smartphone to unlock. Please refer to the guide in U-tec App.

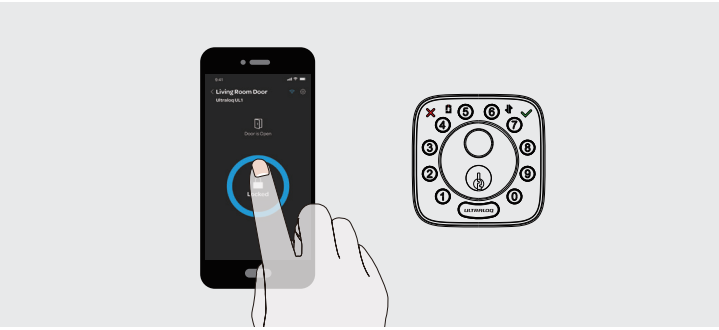

3.2 Lock From Outside

Press ULTRALOQ Button to lock manually.

Enable Auto Lock feature and the lock will relock automatically.

3.3 Unlock From Inside

Rotate the turn to a vertical position to unlock.

3.4 Reset the Lock

Please note all data will be erased if you reset ULTRALOQ Bolt Fingerprint to factory default. If you are using U-tec App as Owner, please click “Remove Device” to remove the lock from your U-tec Account, then you hear one long beep and two short beeps, it means reset successfully. If you have already removed the lock from your U-tec Account, but the lock doesn’t reset itself, please use a Reset Needle to push the Reset Button(at the bottom of Interior Assembly) for 10 seconds until you hear one long beep and two short beeps.

3.5 Replace Batteries

Please use 8 high-quality alkaline AA batteries for replacement when the battery is dead.

Important Note

Please keep at least one key in secure location outside of your place.

3.6 Enable Or Disable Auto Lock

Enable

Please keep Bolt unlocked and press "1" button for 3 seconds until Checkmark Indicator lights on and hear two beeps.

Disable

Please keep Bolt unlocked and press "0" button for 3 seconds until Checkmark Indicator lights on and hear two beeps.

This can also be set in U-tec App and Auto Lock timing can be programmed by yourself.

3.7 Anti-peep Keypad

The lock supports up to 16-digit Vague Code. Just enter any 16-digit code, as long as a correct code is included in what you entered, you can open the door.

Example
User Code: 123456

Vague Code

1: 123456XXXXXX

2: XXXXXX123456

3: XXX123456XXX

3.8 Place Finger

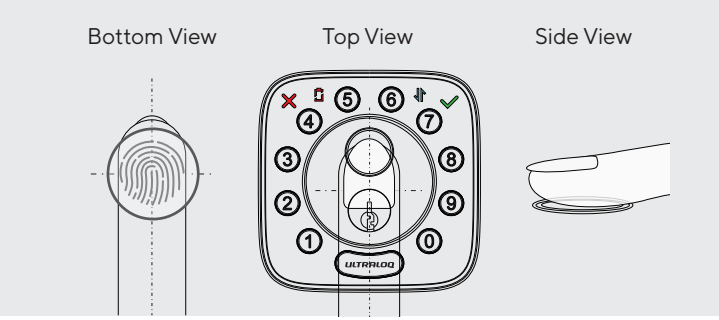

1. For a higher recognition rate, please try to cover the Fingerprint Reader completely with your finger, touching the surrounding metal ring.

2. Make sure that your finger and Fingerprint Reader are clean and dry. For Fingerprint Reader, use a clean, lint-free cloth to wipe off any dirt or debris.

3. Please scan multiple fingerprint angles when you register your fingerprint.

4. While scanning your finger, you shouldn't tap too quickly or move your finger around.

5. If you have trouble enrolling one finger, try another.

6. ULTRALOQ Bolt Fingerprint sensor has self-study function which the verification rate will be improved after multiple success .

4. Standalone Mode Programming Guide

It is recommended to use U-tec App to program your lock. If you don't have a smartphone or don't want to use the App, you may follow the programming instructions below.

Warning
Standalone Mode is NOT available after the lock is registered in App! Please reset the lock to Factory Default Mode first to program your lock in Standalone Mode.

ENGLISH

4.1 Add Admin Code in Standalone Mode

Admin Code must be created first prior to any other programming. Only one Admin Code is available.

Operation	Indicator
Hold ULTRALOQ for 3 sec	2 beeps with light on
↓	
Enter 4-8 digit Admin Code and press ULTRALOQ	2 beeps with light on
↓	
Enter the Admin Code again and press ULTRALOQ	2 beeps with light on
↓	
Success	All lights off

4.2 Add User Code in Standalone Mode

Operation	Indicator
Hold ULTRALOQ for 3 sec	2 beeps with light on
↓	
Enter 4-8 digit Admin Code and press ULTRALOQ	2 beeps with light on
↓	
Enter 4-8 digit User Code and press ULTRALOQ	2 beeps with light on
↓	

Enter the User Code again and press ULTRALOQ	2 beeps with light on
Success	All lights off

4.3 Add Fingerprint in Standalone Mode

Operation	Indicator
Hold ULTRALOQ for 3 sec	2 beeps with light on
Enter 4-8 digit Admin Code and press ULTRALOQ	2 beeps with light on
Press Fingerprint 6 times	5 beeps and digit buttons blink 5 times
Success	All lights off

4.4 Delete Admin and User

Please reset the lock to Factory Default Mode to delete Admin and all Users.

How to reset the lock in Standalone Mode?
Please use a Reset Needle to push the Reset Button (at the bottom of Interior Assembly) for 10 seconds until you hear one long beep and two short beeps.

FAQ

1. How to reset ULTRALOQ Bolt Fingerprint?

Please note all data will be erased if you reset ULTRALOQ Bolt Fingerprint to factory default.

If you are using U-tec App as Owner, please click “Remove Device” to remove the lock from your U-tec Account, then use a Reset Needle to push the Reset Button (at the bottom of Interior Assembly) for 10 seconds until you hear one long beep and two short beeps.

ENGLISH

If ULTRALOQ Bolt Fingerprint is working as Standalone Mode, please use a Reset Needle to push the Reset Button (at the bottom of Interior Assembly) for 10 seconds until you hear one long beep and two short beeps.

2. What if I lost the paired smartphone?

Please go to www.u-tec.com/myutec.html or login U-tec App via another smartphone to change your U-tec Account password.

3. How can I unlock ULTRALOQ Bolt Fingerprint if the battery runs out?

There will be low battery alert on the lock and App when battery is low. Low Battery Indicator will light on when the lock is activated. Please replace batteries.

Use the backup key to unlock. Please keep at least one key in secure location outside of your place.

4. What’s the difference between Owner, Admin, Normal User and Temporary User?

Owner is the person who owns ULTRALOQ Bolt Fingerprint and registers it in U-tec App originally. Owner has all privileges.

Admin can always unlock via fingerprint, code or App. Admin can add or delete Admin and Users, control all lock settings and view logs.

Normal User can always unlock via fingerprint, code or App.

Temporary User has limited access within specific time range.

5. Does ULTRALOQ Bolt Fingerprint work with accessories such as bolt from third party?

It is recommended to use the original accessories for best performance and stability.

6. What is the log capacity for ULTRALOQ Bolt Fingerprint?

ULTRALOQ Bolt Fingerprint supports maximum 1,000 logs. The latest log will replace the oldest one once log is full.

7. What is the user capacity for ULTRALOQ Bolt Fingerprint?

ULTRALOQ Bolt Fingerprint supports maximum 50 users and each user can register 1 code and 2 fingerprints.

8. How to extend battery life of ULTRALOQ Bolt Fingerprint?

You can disable the Remote Access to Lock function in the U-tec APP. After turning off the Remote Access to Lock function,battery life will be approximately doubled.
Remote operation,smart control such as Alexa,Google Assistant,IFTTT and smart notifications will all be unavailable if turned off.

9. Does ULTRALOQ Bolt Fingerprint need to be paired with an ULTRALOQ Bridge?

No, it is a smart lock with built-in WiFi. No extra hub required.

10. What is the network requirement?

ULTRALOQ Bolt Fingerprint can only work with the 2.4G WiFi network (5G WiFi NOT supported).

FCC Statement

This device complies with Part 15 of the FCC rules. Operation is subject to the following two conditions: 1) this device may not cause harmful interference, and 2) this device must accept any interference received, including interference that may cause undesired operation.

Note: This equipment has been tested and found to comply with the limits for a Class B digital device, pursuant to part 15 of the FCC Rules. These limits are designed to provide reasonable protection against harmful interference in a residential installation. This equipment generates uses and can radiate radio frequency energy and, if not installed and used in accordance with the instructions, may cause harmful interference to radio communications. However, there is no guarantee that interference will not occur in particular installation. If this equipment does cause harmful interference to radio or television reception, which can be determined by turning the equipment off and on, the user is encouraged to try to correct the interference by one or more of the following measures:

--Reorient or relocate the receiving antenna.

--Increase the separation between the equipment and receiver.

--Connect the equipment into an outlet on a circuit different from that to which the receiver is connected.

--Consult the dealer or an experienced radio/TV technician for help.

Changes or modifications not expressly approved by the party responsible for compliance could void the user's authority to operate the equipment.

ISED compliance statement

This device contains licence-exempt transmitter(s)/receiver(s) that comply with Innovation, Science and Economic Development Canada's licence-exempt RSS(s). Operation is subject to the following two conditions:

(1) This device may not cause interference.

(2) This device must accept any interference, including interference that may cause undesired operation of the device.

L'émetteur/récepteur exempt de licence contenu dans le présent appareil est conforme aux CNR d'Innovation, Sciences et Développement économique Canada applicables aux appareils radio exempts de licence.

L'exploitation est autorisée aux deux conditions suivantes :

(1) L'appareil ne doit pas produire de brouillage;

(2) L'appareil doit accepter tout brouillage radioélectrique subi, même si le brouillage est susceptible d'en compromettre le fonctionnement.

Radiation Exposure statement

This equipment complies with FCC/ISED radiation exposure limits set forth for an uncontrolled environment. This equipment should be installed and operated with minimum distance 20 cm between the radiator and your body.

Cet équipement est conforme aux limites d'exposition aux radiations FCC/ISED établies pour un environnement non contrôlé. Cet équipement doit être installé et utilisé avecune distance minimale de 20 cm entre le radiateur et votre corps.