GSM850					
Channel	Frequency (MHz)	Spurious Emission		Limit (dBm)	Result
		Polarization	Level (dBm)		
128	1648.4	Vertical	-37.35	-13.00	Pass
	2472.6	V	-36.63		
	3296.8	V	-43.74		
	4121	V	-48.04		
	4945.2	V	---		
	1648.4	Horizontal	-34.11	-13.00	Pass
	2472.6	H	-39.36		
	3296.8	H	-42.83		
	4121	H	-48.11		
	4945.2	H	---		
190	1673.2	Vertical	-38.61	-13.00	Pass
	2509.8	V	-35.96		
	3346.4	V	-44.82		
	4183	V	-47.48		
	5019.6	V	---		
	1673.2	Horizontal	-35.36	-13.00	Pass
	2509.8	H	-38.69		
	3346.4	H	-43.89		
	4183	H	-47.55		
	5019.6	H	---		
251	1697.6	Vertical	-36.87	-13.00	Pass
	2546.4	V	-36.89		
	3395.2	V	-43.33		
	4244	V	-48.26		
	5092.8	V	---		
	1697.6	Horizontal	-32.79	-13.00	Pass
	2546.4	H	-40.07		
	3395.2	H	-41.71		
	4244	H	-48.72		
	5092.8	H	---		

Remark：

1. The emission behaviour belongs to narrowband spurious emission.
2. Remark”---“ means that the emission level is too low to be measured
3. The emission levels of below 1 GHz are very lower than the limit and not show in test report.

PCS1900					
Channel	Frequency (MHz)	Spurious Emission		Limit (dBm)	Result
		Polarization	Level (dBm)		
512	3700.4	Vertical	-24.23	-13.00	Pass
	5550.6	V	-45.36		
	7400.8	V	-46.38		
	9251	V	-51.69		
	11101.2	V	---		
	3700.4	Horizontal	-24.94	-13.00	Pass
	5550.6	H	-43.52		
	7400.8	H	-51.68		
	9251	H	-50.85		
	11101.2	H	---		
661	3760	Vertical	-23.27	-13.00	Pass
	5640	V	-45.88		
	7520	V	-45.56		
	9400	V	-52.12		
	11280	V	---		
	3760	Horizontal	-24.32	-13.00	Pass
	5640	H	-43.85		
	7520	H	-50.93		
	9400	H	-50.94		
	11280	H	---		
810	3819.6	Vertical	-24.42	-13.00	Pass
	5729.4	V	-47.25		
	7639.2	V	-51.74		
	9549	V	-53.56		
	11458.8	V	---		
	3819.6	Horizontal	-25.81	-13.00	Pass
	5729.4	H	-52.11		
	7639.2	H	-50.28		
	9549	H	-50.84		
	11458.8	H	---		

Remark：

1. The emission behaviour belongs to narrowband spurious emission.
2. Remark”---“ means that the emission level is too low to be measured
3. The emission levels of below 1 GHz are very lower than the limit and not show in test report.

WCDMA Band II					
Channel	Frequency (MHz)	Spurious Emission		Limit (dBm)	Result
		Polarization	Level (dBm)		
9262	3704.8	Vertical	-33.72	-13.00	Pass
	5557.2	V	-53.15		
	7409.6	V	-56.52		
	9262	V	---		
	3704.8	Horizontal	-33.68	-13.00	Pass
	5557.2	H	-50.77		
	7409.6	H	-54.65		
	9262	H	---		
9400	3760	Vertical	-34.52	-13.00	Pass
	5640	V	-52.18		
	7520	V	-56.35		
	9400	V	---		
	3760	Horizontal	-34.75	-13.00	Pass
	5640	H	-49.85		
	7520	H	-54.36		
	9400	H	---		
9538	3815.2	Vertical	-34.87	-13.00	Pass
	5722.8	V	-52.58		
	7630.4	V	-55.76		
	9538	V	---		
	3815.2	Horizontal	-34.48	-13.00	Pass
	5722.8	H	-50.28		
	7630.4	H	-55.47		
	9538	H	---		

Remark：

1. The emission behaviour belongs to narrowband spurious emission.
2. Remark”---“ means that the emission level is too low to be measured
3. The emission levels of below 1 GHz are very lower than the limit and not show in test report.

WCDMA Band V					
Channel	Frequency (MHz)	Spurious Emission		Limit (dBm)	Result
		Polarization	Level (dBm)		
4132	1652.8	Vertical	-26.84	-13.00	Pass
	2479.2	V	-49.75		
	3305.6	V	-50.25		
	4132	V	---		
	1652.8	Horizontal	-26.58	-13.00	Pass
	2479.2	H	-39.41		
	3305.6	H	-43.88		
	4132	H	---		
4183	1673.2	Vertical	-27.84	-13.00	Pass
	2509.8	V	-49.58		
	3346.4	V	-50.69		
	4183	V	---		
	1673.2	Horizontal	-27.38	-13.00	Pass
	2509.8	H	-39.02		
	3346.4	H	-44.38		
	4183	H	---		
4233	1693.2	Vertical	-26.08	-13.00	Pass
	2539.8	V	-48.75		
	3386.4	V	-49.38		
	4233	V	---		
	1693.2	Horizontal	-26.69	-13.00	Pass
	2539.8	H	-40.15		
	3386.4	H	-44.74		
	4233	H	---		

Remark：

1. The emission behaviour belongs to narrowband spurious emission.
2. Remark”---“ means that the emission level is too low to be measured
3. The emission levels of below 1 GHz are very lower than the limit and not show in test report.

4.7. Frequency stability V.S. Temperature measurement

LIMIT

2.5ppm

TEST CONFIGURATION

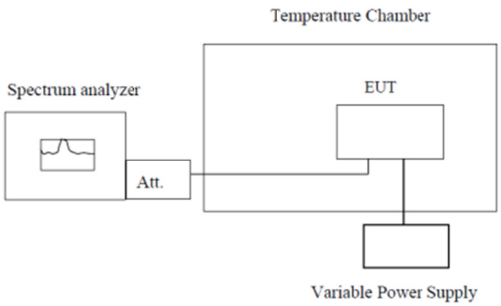

Note : Measurement setup for testing on Antenna connector

TEST PROCEDURE

1. The equipment under test was connected to an external DC power supply and input rated voltage.
2. RF output was connected to a frequency counter or spectrum analyzer via feed through attenuators.
3. The EUT was placed inside the temperature chamber.
4. Set the spectrum analyzer RBW low enough to obtain the desired frequency resolution and measure EUT 25℃ operating frequency as reference frequency.
5. Turn EUT off and set the chamber temperature to –30℃. After the temperature stabilized for approximately 30 minutes recorded the frequency.
6. Repeat step measure with 10℃ increased per stage until the highest temperature of +50℃ reached.

TEST RESULTS

Reference Frequency: GSM850 Middle channel=190 channel=836.6MHz					
Power supplied (Vdc)	Temperature (℃)	Frequency error		Limit (ppm)	Result
		Hz	ppm		
3.80	-30	10	0.012	2.5	Pass
	-20	9	0.011		
	-10	10	0.012		
	0	10	0.012		
	10	8	0.010		
	20	9	0.011		
	30	11	0.013		
	40	10	0.012		
	50	12	0.014		
Reference Frequency: PCS1900 Middle channel=661 channel=1880MHz					
Power supplied (Vdc)	Temperature (℃)	Frequency error		Limit (ppm)	Result
		Hz	ppm		
3.80	-30	20	0.011	2.5	Pass
	-20	17	0.009		
	-10	18	0.010		
	0	17	0.009		
	10	19	0.010		
	20	15	0.008		
	30	16	0.009		
	40	16	0.009		
	50	19	0.010		

Reference Frequency: WCDMA Band II Middle channel=9400 channel=1880MHz					
Power supplied (Vdc)	Temperature (℃)	Frequency error		Limit (ppm)	Result
		Hz	ppm		
3.80	-30	-8	-0.004	2.5	Pass
	-20	-7	-0.004		
	-10	-5	-0.003		
	0	-7	-0.004		
	10	-6	-0.003		
	20	-5	-0.003		
	30	-8	-0.004		
	40	-6	-0.003		
	50	-9	-0.005		

Reference Frequency: WCDMA Band V Middle channel=4183 channel=836.6MHz					
Power supplied (Vdc)	Temperature (℃)	Frequency error		Limit (ppm)	Result
		Hz	ppm		
3.80	-30	-7	-0.008	2.5	Pass
	-20	-5	-0.006		
	-10	-4	-0.005		
	0	-4	-0.005		
	10	-5	-0.006		
	20	-6	-0.007		
	30	-5	-0.006		
	40	-7	-0.008		
	50	-8	-0.010		

4.8. Frequency stability V.S. Voltage measurement

LIMIT

2.5ppm

TEST CONFIGURATION

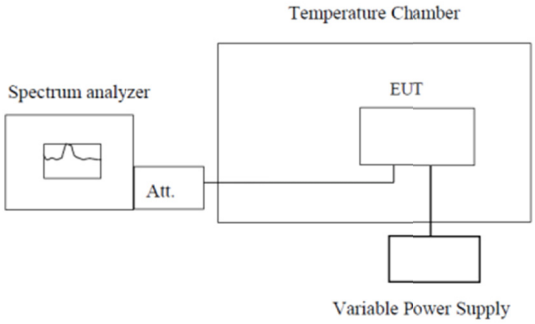

Note : Measurement setup for testing on Antenna connector

TEST PROCEDURE

1. Set chamber temperature to 25℃. Use a variable DC power source to power the EUT and set the voltage to rated voltage.
2. Set the spectrum analyzer RBW low enough to obtain the desired frequency resolution and recorded the frequency.
3. Reduce the input voltage to specified extreme voltage variation (+/- 15%) and endpoint, record the maximum frequency change.

TEST RESULTS

Reference Frequency: GSM850 (GSM link) Middle channel=190 channel=836.6MHz					
Temperature (℃)	Power supplied (Vdc)	Frequency error		Limit (ppm)	Result
		Hz	ppm		
25	4.35	10	0.012	2.5	Pass
	3.80	8	0.010		
	3.60	11	0.013		
Reference Frequency: PCS1900 (GSM link) Middle channel=661 channel=1880MHz					
Temperature (℃)	Power supplied (Vdc)	Frequency error		Limit (ppm)	Result
		Hz	ppm		
25	4.35	16	0.009	2.5	Pass
	3.80	15	0.008		
	3.60	18	0.010		
Reference Frequency: WCDMA Band II Middle channel=9400 channel=1880MHz					
Temperature (℃)	Power supplied (Vdc)	Frequency error		Limit (ppm)	Result
		Hz	ppm		
25	4.35	-6	-0.003	2.5	Pass
	3.80	-5	-0.003		
	3.60	-8	-0.004		
Reference Frequency: WCDMA Band V Middle channel=4183 channel=836.6MHz					
Temperature (℃)	Power supplied (Vdc)	Frequency error		Limit (ppm)	Result
		Hz	ppm		
25	4.35	-7	-0.008	2.5	Pass
	3.80	-5	-0.006		
	3.60	-8	-0.010		

4.9. Peak-Average Ratio

LIMIT

13dB

TEST CONFIGURATION

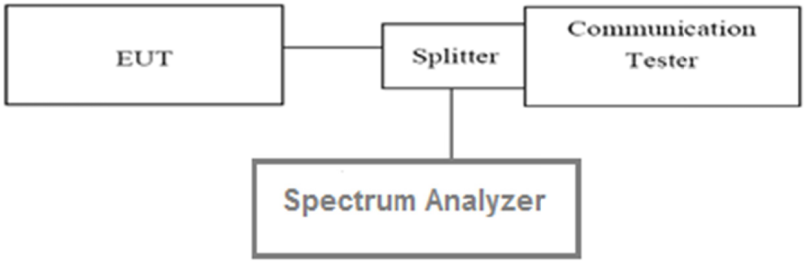

TEST PROCEDURE

According with KDB 971168
1. The signal analyzer' s CCDF measurement profile is enabled
2. Frequency = carrier center frequency
3. Measurement BW > Emission bandwidth of signal
4. The signal analyzer was set to collect one million samples to generate the CCDF curve
5. The measurement interval was set depending on the type of signal analyzed. For continuous signals(>98% duty cycle), the measurement interval was set to 1ms. For burst transmissions, the spectrum analyzer is set to use an internal " RF Burst" trigger that is synced with an incoming pulse and the measurement interval is set to less than the duration of the " on time" of one burst to ensure that energy is only captured during a time in which the transmitter is operating at maximum power

TEST RESULTS

Worst case GSM1900, WCDMA BAND1900

Band	Channel	Frequency(MHz)	PAR	Limit(dB)	Result
GSM1900	512	1850.2	9.59	13	Pass
	661	1880	9.49	13	Pass
	810	1909.8	9.61	13	Pass

Band	Channel	Frequency(MHz)	PAR	Limit(dB)	Result
WCDMA BAND II	9262	1852.4	3.45	13	Pass
	9400	1880	3.12	13	Pass
	9538	1907.6	3.31	13	Pass

5. Test Setup Photos of the EUT

Radiated emission:

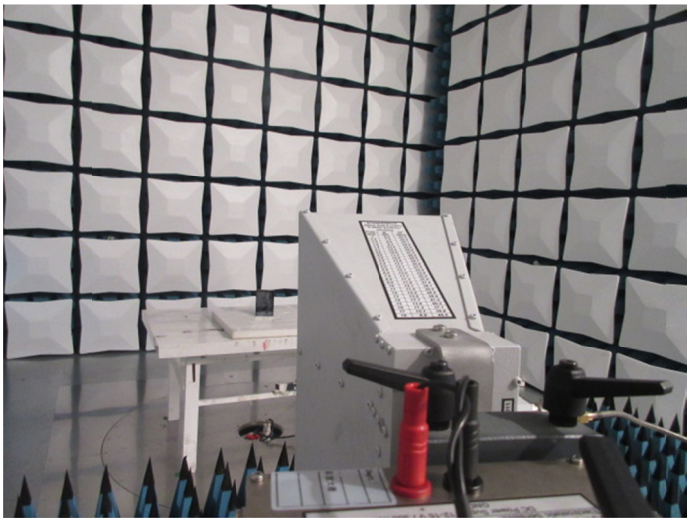

6. External and Internal Photos of the EUT

External photos of the EUT

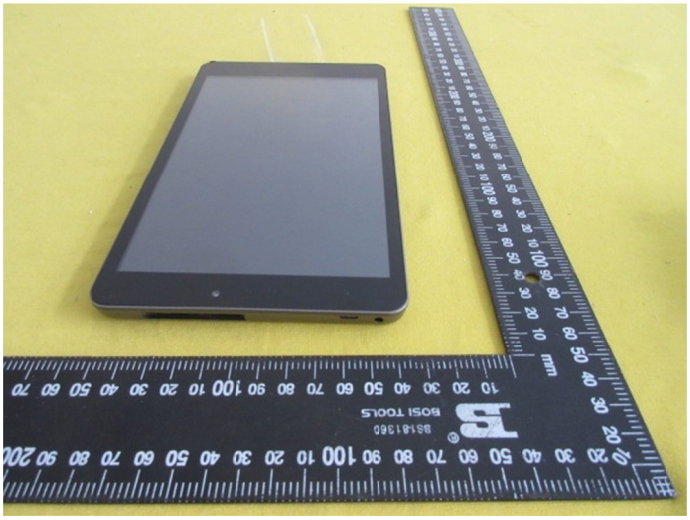

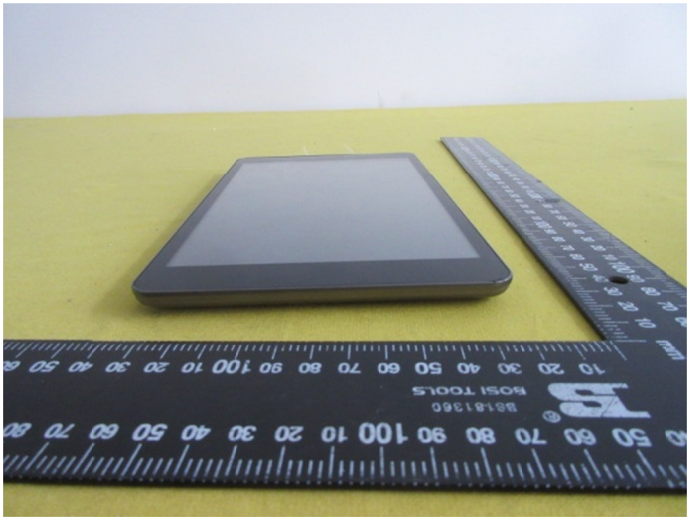

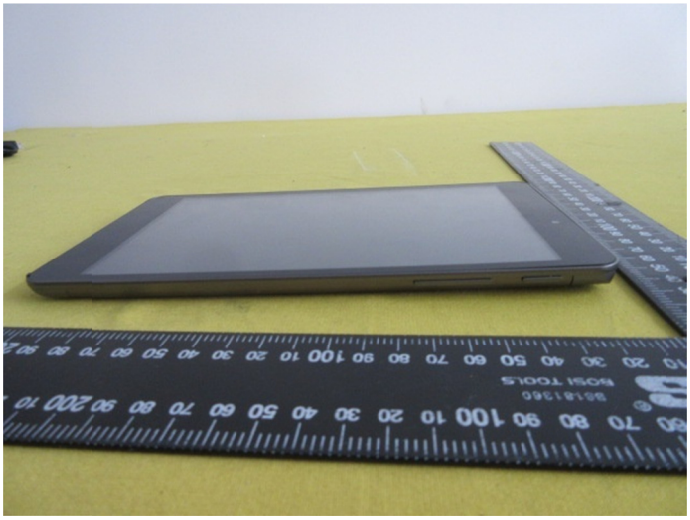

BY MASON

Internal photos of the EUT

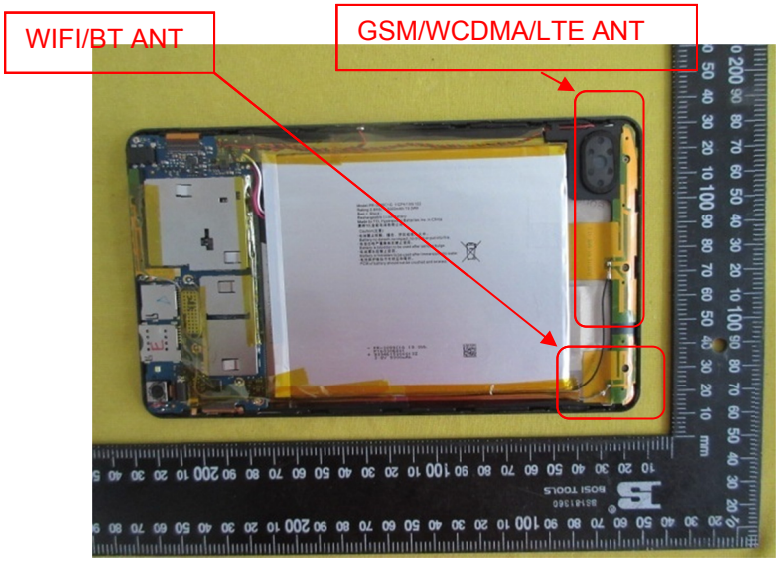

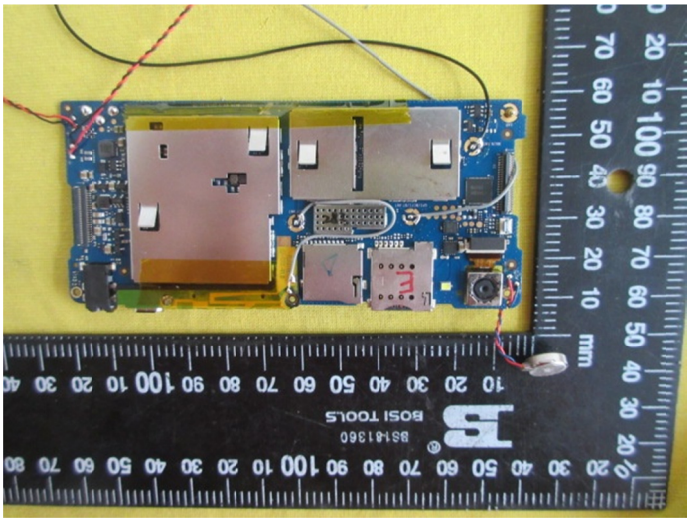

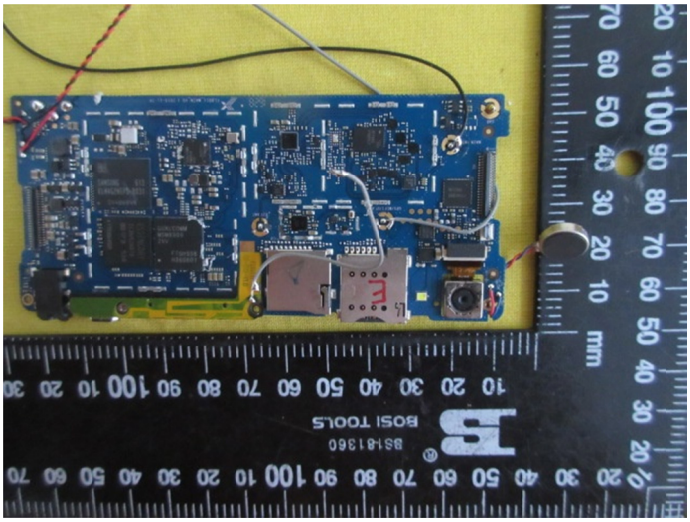
BOSI TOOLS
mm

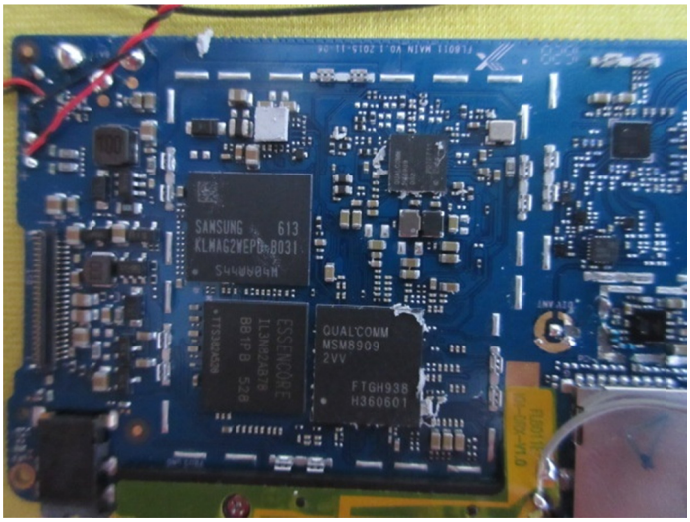
SAMSUNG
KLMAG2WEPB-B031
QUALCOMM
MSM8909
2VV
FTGH938
H360601

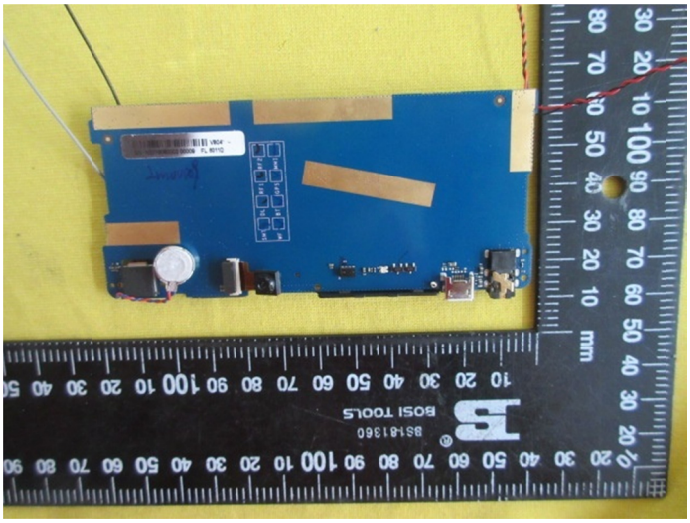
BOSI TOOLS
mm

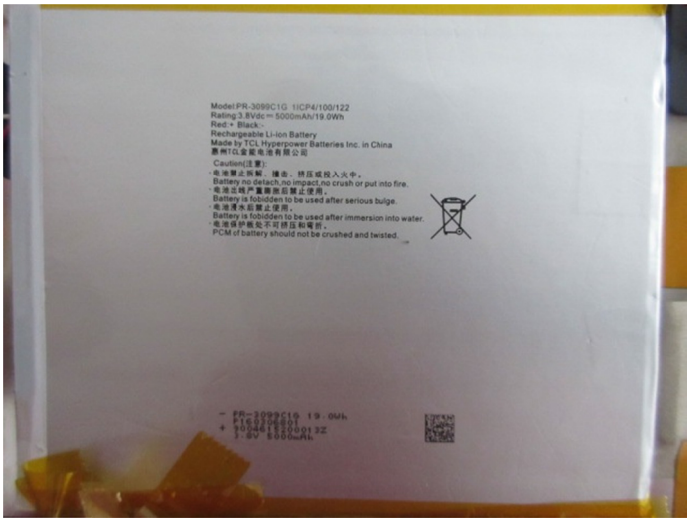

----------End of Report----------