Instruction of RF377C

1. Electrical configuration diagram：

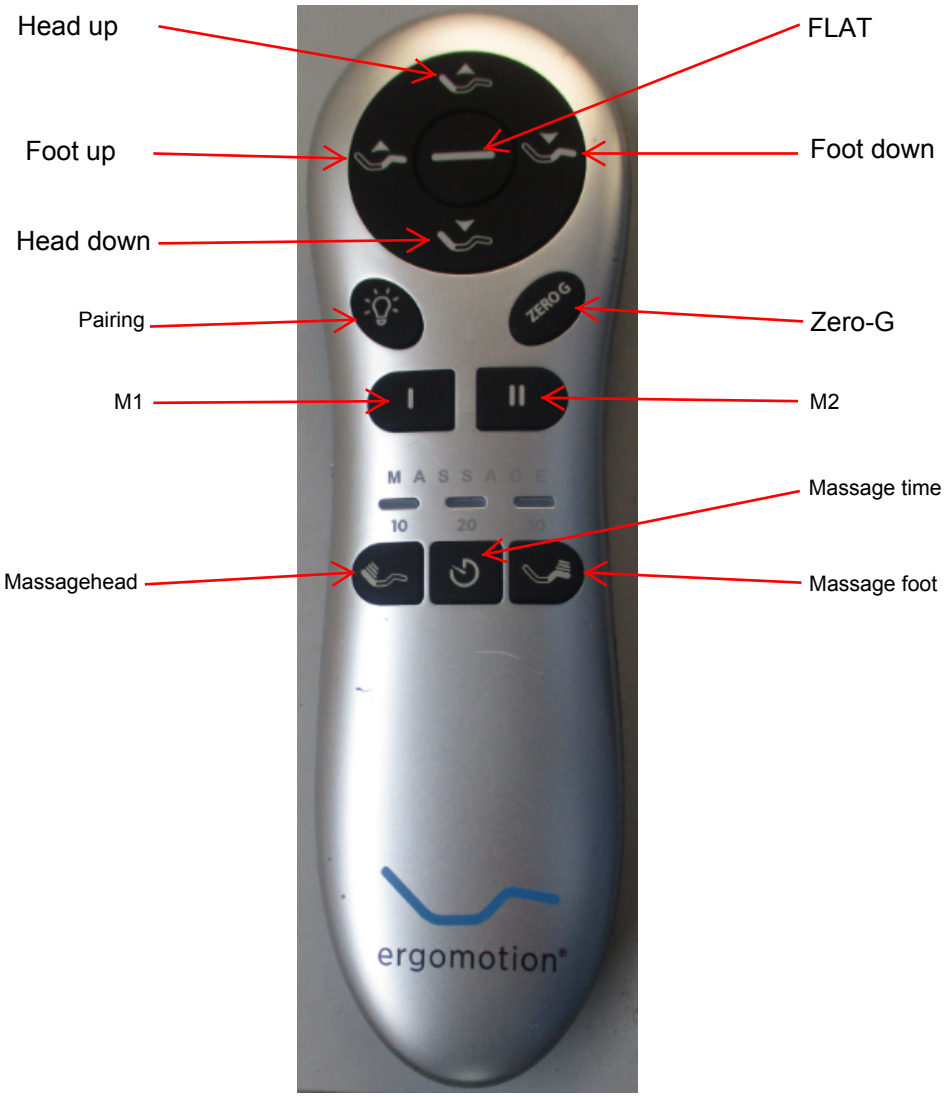

2. Item

2.1 Head up

Press and hold HEAD UP button of remote, head actuator moves out, stop when released；

2.2 Head down

Press and hold HEAD DOWN button of remote, head actuator moves in, stop when released；

2.3 Foot up

Pressa and hold FOOT UP button of remote, foot actuator moves out, stop when released;

2.4 Foot down

Press and hold FOOT DOWN button of remote, foot actuator moves in , stop when released；
When moving to flat position, lumbar actuator and tilt actuator move first, after 500ms, head andfoot actuators start moving;

2.5 Flat

Click FLAT button, the bed goes flat, stop when click any button during the process of going flat；

2.6 Zero-G

Release after press, 2 lifts move to Zero-G position

2.7 Pairing

PressHead Lift + and Foot Lift +key for more than 1 second, the remote will enter pairing mode and a B_ LED will flash. Release this key to stop pairing .After the pairing is successful, B_LED will stop flashing.

2.8 M1

Release after press, 2 lifts move to M1 position

2.9 M2

Release after press, 2 lifts move to M2 position

2.10 Massagehead

Turn on massage head

2.11 Massage foot

Turn on massage foot

2.12 Massage time

Press the Massage time key will turn on the massage and choose timing for 10min-20min-30min-off

FCC Warning：

Any Changes or modifications not expressly approved by the party responsible for compliance could void the user’s authority to operate the equipment.
This device complies with part 15 of the FCC Rules. Operation is subject to the following two conditions: (1) This device may not cause harmful interference, and
(2) this device must accept any interference received, including interference that may cause undesired operation.

ISED RSS Warning:

This device complies with Innovation,Science and Economic Development Canada licenceexemptRSS standard(s). Operation is subject to the following two conditions: (1) this devicemay not cause interference, and (2) this device must accept any interference, includinginterference that may cause undesired operation of the device.
Le présent appareil est conforme aux CNR d'ISED applicables aux appareils radioexempts de licence.
L'exploitation est autorisée aux deux conditions suivantes:
(1) l'appareil ne doit pas produire de brouillage, et
(2) l'utilisateur de l'appareil doit accepter tout brouillage radioélectrique subi,même si le brouillage est susceptible d'en compromettre le fonctionnement.
ISED RF exposure statement:
This equipment complies with ISED radiation exposure limits set forth for an uncontrolled environment.The device has been evaluated to meet general RF exposure requirement.
Le matériel est conforme aux limites de dose d'exposition aux rayonnements énoncés pour fac un autre environnement.ce dispositif a été évalué à satisfaire l'exigence générale de l'exposition aux rf.
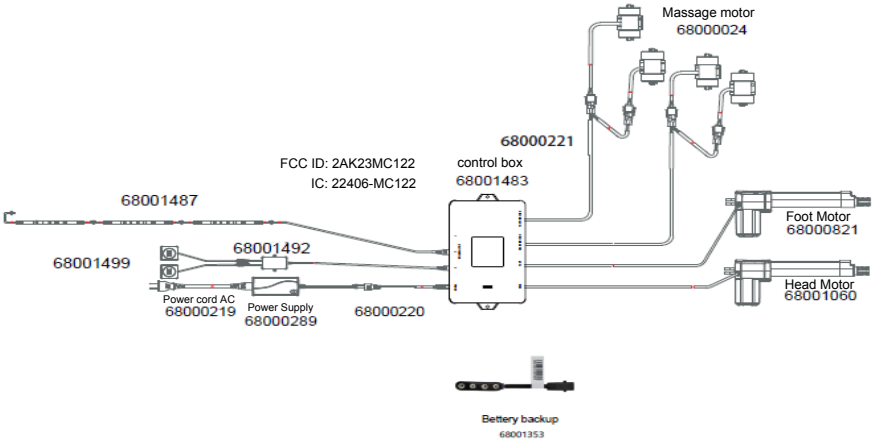
FCC ID: 2AK23RF377C
IC: 22406-RF377C