Rentokil

RADAR X

Applicable to: **Standard / Connect Variants**

This manual is based on the latest information and is provided subject to alteration. We reserve the right to change the construction and/or configuration of the product and versions at any time without obligation.

All rights reserved. No part of this document may be reproduced, stored in a database or any other retrieval system, or published, in any form or way, electronically, mechanically, digitally per photo print or microfilm or any other way without written permission from the author.

Contents

Introduction

- Safety Instruction 4
- Attention 4
- Warning 4
- Warning Translations 5
- Product Description 7
- Product Function (Connect Variants Only) 7
- Limitation of Liability & Damages 8
- Product Disposal 8
- Environmental Restrictions 9
- Product Range 10

Installation

1. Prior to RADAR X Installation 11
2. Site Installation 11
3. Fitting the Battery 12
4. Battery Level 13
5. Site Survey (Connect Variants Only) 13
6. Open Catch Tray 13
7. Setting the Trap Doors 14
8. Setting the Trigger Mechanism 14
9. Fitting CO_2 Canister 14
10. Refitting the Catch Tray 15
11. Arming the Module 15

Servicing & Maintanence

1. Status Check 16
2. Enter Service Mode 17
3. Within Service Mode 18
4. Cleaning 18
5. Setting the Trap 18
6. Removing a used CO_2 Canister 19
7. Fitting a new CO_2 Canister 19
8. Refitting the Catch Tray 20
9. Reactivate the Trap 20

How to Swap Trays

1. Open Catch Tray 21
2. Remove and Replace Catch Tray 21
3. Close and Lock the Catch Tray 21

Contents

How to Swap Sensor Pods

1. Remove Battery 22
2. Open Catch Tray 22
3. Remove Rodent Sensor Pod 22
4. Replace Rodent Sensor Pod 23
5. Close and Lock the Catch Tray 23
6. Reactivate the Trap 23

Fitting the Lanyard

1. Parts required to Fit the Lanyard 24
2. Fitting the Lanyard 24
2. Removing the Lanyard 24

System Information

- Enter System Information 25

Operating the UI

- Operating the User Interface 27
- Error Codes 29
- Error Code Details 30

Advanced Diagnostic Mode

- LED Test 34
- Motor Test 35
- Temperature Test 36
- Accel Test 37
- Side Pod Test 37
- Exit Advanced Diagnostic Mode 38

Further Information

- Technical Details 39
- Product Code Summary 39
- Approvals 40

Introduction

RADAR X is a discreet, humane and non-toxic solution of mouse control. Designed specifically for high risk market segments where even a single mouse cannot be tolerated. RADAR X is suitable for food and pharmaceutical manufacturers, hospitality, educational and health establishments.

Safety Instructions

- Only use the Battery Packs that are supplied by Rentokil.
- Do not use the trapping device if it is damaged.
- Do not expose the trapping device to corrosive liquids.
- Do not use this trapping device near to water sources.
- This trapping device contains a pressurised Carbon Dioxide (CO_2) canister and should not be heated or incinerated.
- Only "approved", supplied by Rentokil RADAR or RADAR S 8g (0.28oz) gas canisters are to be used in the trapping device.
- This appliance can be used by children aged from 8 years and above and persons with reduced physical, sensory or mental capabilities or lack of experience and knowledge if they have been given supervision or instruction concerning use of the appliance in a safe way and understand the hazards involved. Children shall not play with the appliance. Cleaning and user maintenance shall not be made by children without supervision.

Note: A. If the equipment is used in a manner not specified by the manufacturer then the protection provided by the equipment may be impaired.
B. Save these instructions.

Attention

Users can perform the maintenance tasks described in this document. Users must not perform any other repairs or maintenance.
Each canister can only be used once. RADAR X requires no maintenance other than cleaning and management of the batteries and CO_2 canisters.

Warning

Only personnel with appropriate skills and training must install or service this trapping device. Do not install this trapping device in areas where dangerous concentrations of inflammable or explosive substances may be present in the air. Only install this product indoors shielded from direct sunlight. Do not install the trapping device in a barn, stable, or similar location. Children must not play with this trapping device. The appliance is to be kept out of reach of children.

Warning Translations

NL: Waarschuwing

Deze val mag uitsluitend geïnstalleerd of onderhouden worden door personeel dat over de juiste vaardigheden en training beschikt. U mag deze val niet installeren op locaties waar gevaarlijke concentraties van brandbare of explosieve stoffen aanwezig kunnen zijn in de lucht. Installeer dit product alleen binnen en niet in het directe zonlicht. Installeer deze val niet in een schuur, stal of vergelijkbare locatie. Kinderen mogen niet met deze val spelen. Dit product moet buiten het bereik van kinderen worden bewaard.

FR: Avertissement

Ce dispositif de piégeage devra exclusivement être installé ou entretenu par du personnel dûment formé et qualifié. N'installez pas ce dispositif de piégeage dans des endroits présentant des concentrations dangereuses de matières inflammables ou explosives dans l'air. Installez exclusivement ce produit dans un environnement intérieur, à l'abri de la lumière directe du soleil. N'installez pas le dispositif de piégeage au sein d'une grange ou d'une étable, ou tout autre endroit similaire. Les enfants ne doivent pas jouer avec ce dispositif de piégeage. L'appareil doit rester hors de portée des enfants.

DE: Warnung

Nur Personen mit entsprechender Kompetenz und Schulung dürfen diese Falle installieren oder warten. Installieren Sie diese Falle nicht in Bereichen, in denen gefährliche Konzentrationen brennbarer oder explosiver Stoffe in der Luft vorhanden sein könnten. Installieren Sie dieses Gerät nur in Innenräumen an einem vor direkter Sonneneinstrahlung geschützten Ort. Installieren Sie die Falle nicht in einer Scheune, einem Stall oder an einem ähnlichen Ort. Kinder dürfen nicht mit dieser Falle spielen. Das Gerät muss außerhalb der Reichweite von Kindern aufbewahrt werden.

DK: Advarsel

Kun personer med tilsvarende kompetencer og uddannelse må installere og servicere denne fælde. Fælden må ikke anbringes i områder, hvor luften indeholder farlige koncentrationer af letantændelige eller eksplosive stoffer. Produktet må kun installeres indendørs og beskyttet mod direkte sollys. Fælden må ikke installeres i en lade, stald eller et lignende sted. Børn må ikke lege med fælden. Anordningen skal være utilgængelig for børn.

CZ: Varování

Instalaci a servis této pasti mohou provádět pouze řádně kvalifikovaní a proškolení pracovníci. Past neinstalujte do míst, kde může být ve vzduchu nebezpečná koncentrace hořlavých nebo výbušných látek. Tuto past je možné instalovat pouze ve vnitřních prostorách na místo chráněné před přímým slunečním zářením. Past neinstalujte do stodol, stájí ani jiných podobných prostor. S pastí si nesmí hrát děti. Uchovávejte zařízení mimo dosah dětí.

ES: Advertencia

La instalación o el mantenimiento de este dispositivo de captura deben correr a cargo de personal con la formación y las destrezas adecuadas. No instale el dispositivo de captura en áreas en las que puedan concentrarse sustancias inflamables o explosivas en el aire. Instale este producto únicamente en el interior, en un lugar protegido de la luz solar directa. No instale el dispositivo de captura en graneros, establos ni lugares similares. Los niños no deben jugar con el dispositivo de captura. El aparato debe mantenerse fuera del alcance de los niños.

PT: Aviso

Este dispositivo de armadilha apenas deve ser instalado e mantido por pessoal com a devida competência e formação. Não instale este dispositivo de armadilha em áreas em que o ar possa conter concentrações perigosas de substâncias inflamáveis ou explosivas. Instale este produto

apenas em interiores, afastado da luz solar direta. Não instale o dispositivo de armadilha em celeiros, estábulos ou locais semelhantes. As crianças não devem brincar com este dispositivo de armadilha. Este dispositivo deve ser mantido fora do alcance das crianças.

FI: Varoitus

Tämän laitteen saa asentaa ja huoltaa vai henkilöstö, jolla on siihen tarvittavat taidot ja koulutus. Tätä loukkua ei saa asentaa alueille, joiden ilmakehässä saattaa olla vaarallisia syttyvien tai räjähtävien aineiden pitoisuuksia. Tuotteen saa asentaa vain sisätiloihin, suoralta auringonvalolta suojattuun paikkaan. Loukkua ei saa asentaa latoon, talliin eikä muihin vastaaviin paikkoihin. Lasten ei pidä antaa leikkiä tällä loukulla. Se on pidettävä lasten ulottumattomissa.

IT: Avvertenza

Solo personale dotato di adeguate competenze e formazione deve installare o riparare questa trappola. Non installare questa trappola in zone in cui potrebbero essere presenti nell'aria concentrazioni pericolose di sostanze infiammabili o esplosive. Installare questo prodotto esclusivamente all'interno, protetto dalla luce solare diretta. Non installare la trappola in un fenile, una stalla o luoghi simili. I bambini non devono giocare con questa trappola. L'apparecchio deve essere tenuto fuori dalla portata dei bambini.

SK: Varovanie

Inštaláciu a údržbu tejto pasce smie vykonávať iba personál s patričnými znalosťami a vzdelaním. Neinštalujte túto pascu v oblastiach, kde sa môžu vo vzduchu nachádzať nebezpečné koncentrácie horľavých alebo výbušných látok. Tento výrobok inštalujte iba v interiéri tienený proti priamemu slnečnému svetlu. Neinštalujte pascu v stodole, maštali alebo na podobnom mieste. Deti sa s touto pascou nesmú hrať. Pasca sa musí uchovávať mimo dosahu detí.

SV: Varning

Den här fällan får endast installeras och underhållas av personer med lämpliga färdigheter och träning. Installera inte den här fällan i områden där farliga koncentrationer av brandfarliga eller explosiva ämnen kan förekomma i luften. Den här produkten ska endast installeras inomhus skyddad från direkt solljus. Installera inte fällan i en lada, stall eller liknande. Låt inte barn leka med den här fällan. Enheten måste hållas utom räckhåll för barn.

NO: Advarsel

Kun personer med tilstrekkelig kunnskap og opplæring skal installere eller reparere denne musefellen. Plasser ikke musefellen i områder der farlige konsentrasjoner av brennbare eller eksplosive stoffer kan være tilstede i luften. Dette produktet må bare installeres innendørs og borte fra direkte sollys. Musefellen må ikke installeres i en låve, stall eller lignende sted. Barn skal ikke leke med musefellen. Apparatet skal oppbevares utilgjengelig for barn.

EL: Προειδοποίηση

Η εγκατάσταση και οι εργασίες συντήρησης αυτής της συσκευής παγίδευσης πρέπει να εκτελούνται μόνο από προσωπικό με τις κατάλληλες δεξιότητες και εκπαίδευση. Μην εγκαθιστάτε αυτή τη συσκευή παγίδευσης σε περιοχές όπου επικίνδυνες συγκεντρώσεις εύφλεκτων ή εκρηκτικών ουσιών μπορεί να είναι παρούσες στον αέρα. Εγκαθιστάτε αυτό το προϊόν μόνο σε εσωτερικούς χώρους σε μέρος προστατευμένο από το άμεσο φως του ήλιου. Μην εγκαθιστάτε τη συσκευή παγίδευσης σε σιταποθήκη, στάβλο ή παρόμοια τοποθεσία. Τα παιδιά δεν πρέπει να παίζουν με αυτήν τη συσκευή παγίδευσης. Η συσκευή πρέπει να φυλάσσεται μακριά από παιδιά.

TR: Uyarı

Yalnızca uygun kabiliyete ve eğitime sahip olan personel bu kapanın kurulumunu yapmalı ve servisini üstlenmelidir. Bu kapanı havada tehlikeli konsantrasyon oranında yanabilen veya patlayıcı maddenin bulunduğu alanlara kurmayın. Bu ürünü yalnızca kapalı mekanlarda, doğrudan güneş ışığına maruz kalmayacak şekilde kurun. Kapanı ahır veya benzeri bir yere kurmayın. Çocuklar bu kapan ile oynamamalıdır. Cihaz, çocukların erişemeyeceği bir yerde saklanmalıdır.

Product Description

RADAR X is a stand alone, battery powered trapping device that has been designed to capture, dispatch and contain mice efficiently, hygienically and humanely. It is designed primarily for high risk customers, such as food processing plants, pharmaceutical manufacturing and computer suites, where there is zero pest tolerance or conventional baiting is not allowed. However, the many product features of RADAR X make it suitable for a wide range of customers as it can operate in a variety of environments. Intruding mice are captured as soon as they are detected, immediately reducing the risk to the customer. They are then dispatched by concentrated release of carbon dioxide (CO_2) into the tightly sealed trapping device. CO_2 is capable of dispatching mice extremely rapidly and is widely recognised as a humane method of control. The mouse is unconscious within 15-20 seconds and fatal levels are reached within 45 seconds of the trapping device's activation.

RADAR X has been designed by Rentokil to exploit the travelling habits of mice as opposed to more traditional methods which target their feeding behaviours, e.g. baiting. Correctly installed trapping devices will typically be placed at wall / floor junctions, relying on a mouse's natural curiosity and tendency to run against walls. RADAR X can be configured to have a single chamber only. Whether configured as a single or as a dual, when the mouse enters through the trap, it triggers the device to immediately close the door, trapping the mouse inside a tightly sealed chamber. Simultaneously, a pressurised gas canister is pierced and fills the relevant tray with carbon dioxide.

The customer is provided with 24/7 pest control and can be reassured that the product is both effective and humane, reducing the risk to their stock and premises.

It is recommended to replace batteries at 12 monthly intervals to maximise the installed system performance.

Product Functions (Connect Variants Only)

RADAR X signals the capture of a mouse sending a message to the Connect Control Panel and then server. A technician will receive an alert and arrive promptly to empty, clean, service and reset the trapping device. Rigorous testing and quality controls have been implemented at every stage of the manufacturing process to ensure that RADAR X is a high quality product that is capable of supporting a high quality service proposition.

The Long Reach radio system ensures reliable connectivity remotely to the control panels. Beacon signals are emitted from the control panels, so the RADAR X will connect to the control panel with the best connection. In an system with multiple control panels, the RADAR X will select an alternative if the connection to the initial one fails.
The loss of connection to the radio system will cause sensors to retry the connection and attempt to make a new one if it can. If connection continues to be unsuccessful the software automatically increases the time between attempts to conserve battery life.

The maximum number of trapping devices that can be connected to a control panel is 300 and so if more trapping devices are required then an additional control panel will be required.

Limitation of Liability & Damages

The product and the softwares within are provided on an “as is” basis. The manufacturer and manufacturer’s resellers (collectively known as “The Sellers”) disclaim all warranties, express, implied or statutory, including and without limitation the implied warranties of non-infringement, merchantability or fitness for a particular purpose, or any warranties arising from course of dealing, course of performance, or usage of trade. In no event will the sellers be liable for damages or loss, including but not limited to direct, indirect, special, wilful, punitive, incidental, exemplary or consequential damages, damages for loss of business profits, or damages for loss of business of any customer or third party arising out of the use or the inability to use the product, including but not limited to those resulting from defects in the product or documentation. In no event shall the sellers’ total cumulative liability of each and every kind in relation to the product exceed the cost to replace.

The product described in this manual is subject to continuous development and improvement and Rentokil reserve the right to alter the specification or design without prior notice. Rentokil cannot accept any liability for any loss or damage arising from the use of any information contained within this manual, or from any incorrect use of the product described herein. Rentokil can accept no liability whatsoever for any loss or damage arising from the product being serviced maintained or repaired by unauthorised personnel.

Product Disposal

The Waste of Electrical and Electronic Equipment WEEE Directive 2012/19/EU has been put in place to recycle products using best available recovery and recycling techniques to minimise the impact on the environment, treat any hazardous substances and avoid increasing landfill. The symbol shown below and on the product means that the product is classed as Electrical or Electronic Equipment and you should not put it into your domestic waste bin. When you have no more use for it, please dispose of the product according to your local authority’s recycling scheme. For more information, please contact your local authority or the retailer where you bought the product.

Environmental Restrictions

Environmental Restrictions	Details
High levels of surface water	The system electronics are protected by IP65 rating however excessive levels of water can damage the device. Take care to locate trapping devices away from areas where local high pressure washing is carried out or where the unit could be at risk of being immersed in water.
High levels of dust / grease	It is important that trapping devices are kept clean, especially if installed in areas where high levels dust, grease or spray from water are present. Cleaning guidelines must be followed to prevent damage to the trapping devices.
Knocking / Kicking	Care must be taken to locate trapping devices away from pedestrian traffic to avoid false activation.
Extreme Temperatures <-5°C (+23°F) >+50°C (+122°F)	Extremely low temperatures (i.e. unheated warehouses) could affect RADAR X's performance and may result in the trapping device entering low battery status mode. The unit will trigger should the ambient temperature exceed 50°C as a safety precaution due to the limitation of the CO_2 cannister(s).
High humidity (> 80%) condensation	High humidity and / or condensation could result in damage to the trapping device's control electronics and result in false activations.
High levels of vibration	High vibration due to localised machinery / fridge compressors etc could affect the performance of the trapping device and result in false activations.
Indoor Use Only	RADAR X has been specifically designed for indoor applications only. The product is not suitable for outdoor use.

Product Range

i. SKU Variants

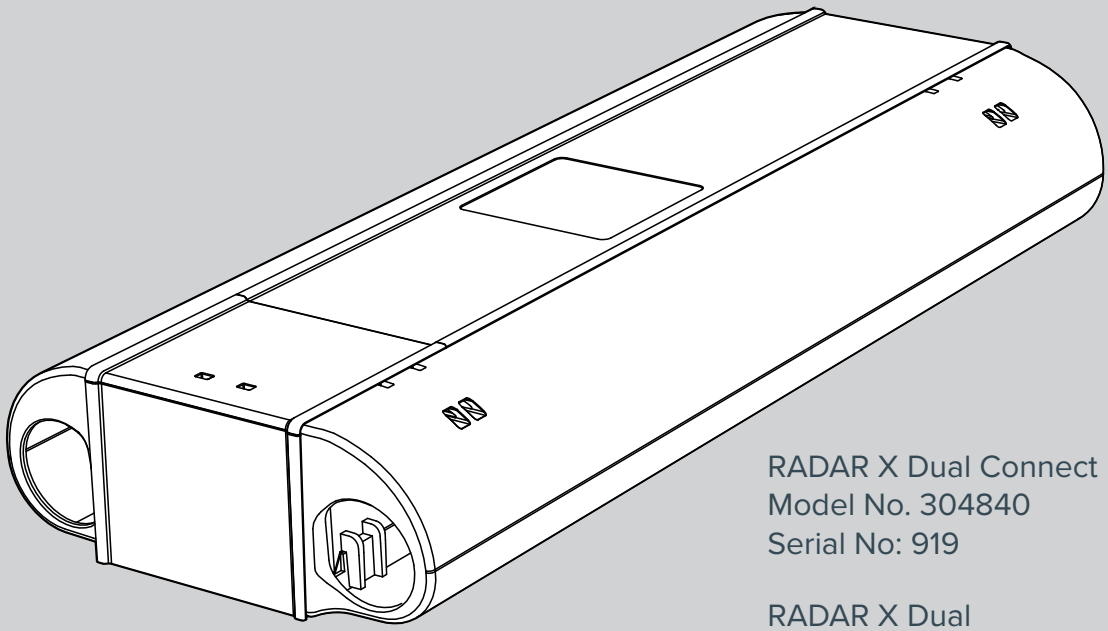

RADAR X Dual Connect
Model No. 304840
Serial No: 919

RADAR X Dual
Model No. 304839
Serial No: 120

ii. Component Parts for Installation

1. Main Trapping Device
2. Catch Trays x2
3. CO_2 Canisters x2
4. RI Service Key
5. Battery
6. Battery Door Cover
7. Sensor Units x2
8. Lanyard

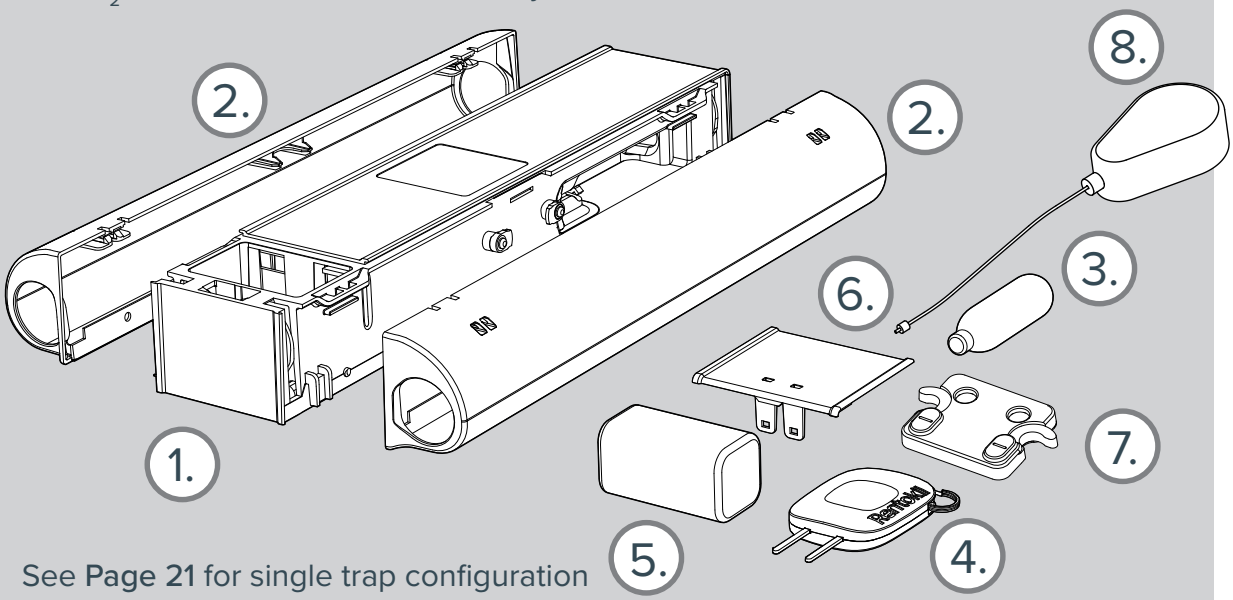

See **Page 21** for single trap configuration

Installation

1. Prior to RADAR X Installation

While unpacking, check for any signs of shipment damage and, if found, notify both transporter and supplier in writing immediately of receipt with full details of the damage that has occurred. Retain the equipment and packing materials for inspection. Check that all parts have been received as ordered. Make sure that all packaging is removed from the trapping device before use.

2. Site Installation

RADAR X trapping devices should be sited along wall / floor junctions, behind machinery and equipment, i.e. anywhere where bait boxes and mouse monitor units (MMU's) would normally be placed. Trapping devices should be secured with a lanyard if possible to prevent the trapping device being accidentally moved, knocked or removed by unauthorised persons. See page 24 for more lanyard information.

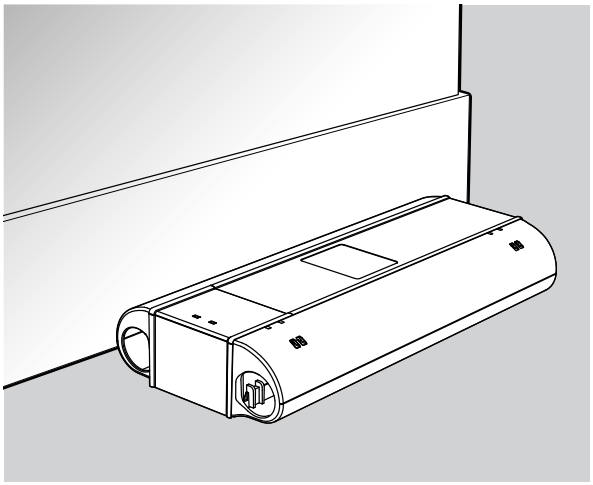

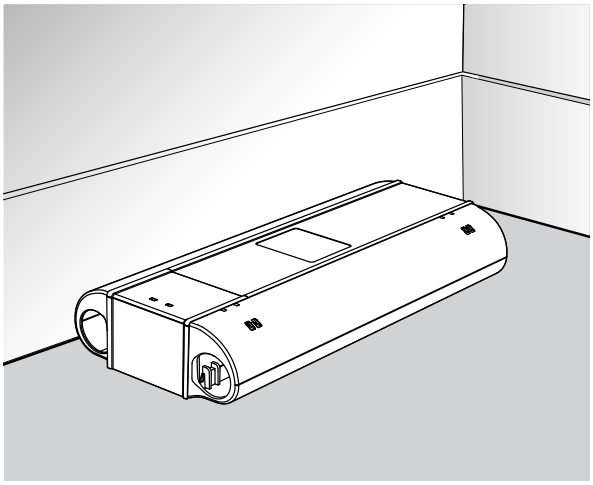

3. Fitting the Battery

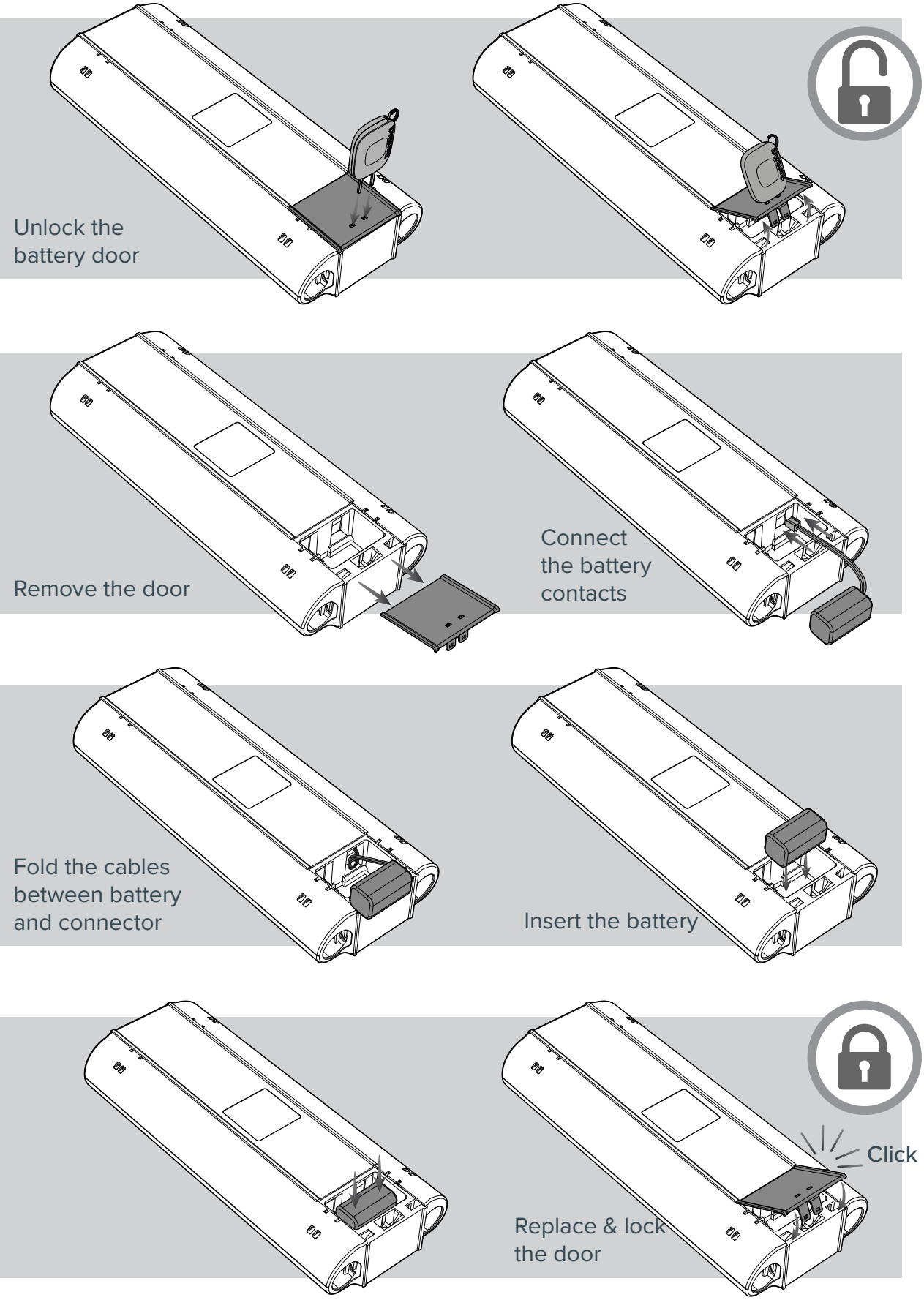

4. Battery Level

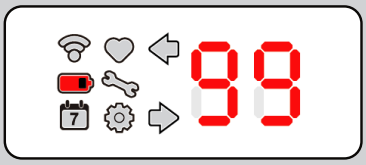

Battery capacity % displayed for 2 seconds with Battery Level (Icon) solid.

Eg: Battery is at 99%

5. Site Survey (Connect Variants Only)

To assess network signal strength and the number of control panels required for a site, the Range Check Mode can be used.

With the device Interface active, hold the **RI Service Key Magnet** over the sensor for 3 seconds and Range Check Mode will be enabled. The user interface LEDs will show this and give a reading r- to r9. Higher the “r” number, the stronger the signal. The signal strength will show for 1 hour to allow technician to survey the site.

The Connect LED Identifier (Icon) will also flash to indicate signal strength:

LED IDENTIFIER:

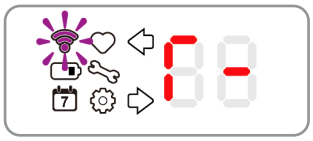

Flashes **Purple**: Trying to connect

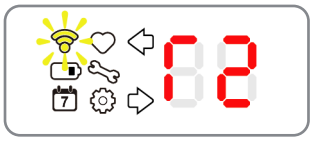

Flashes **Yellow**: Weak signal

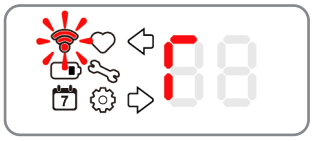

Flashes **Red**: No signal

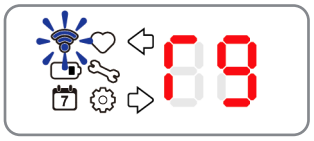

Flashes **Blue**: Good signal

To exit the Range Check Mode before the 1 hour duration, hold the RI Service Key Magnet over the sensor for 3 seconds. When in Range Check Mode, a tap of the Service Key Magnet will go into System information (see page 25).

6. Open Catch Tray

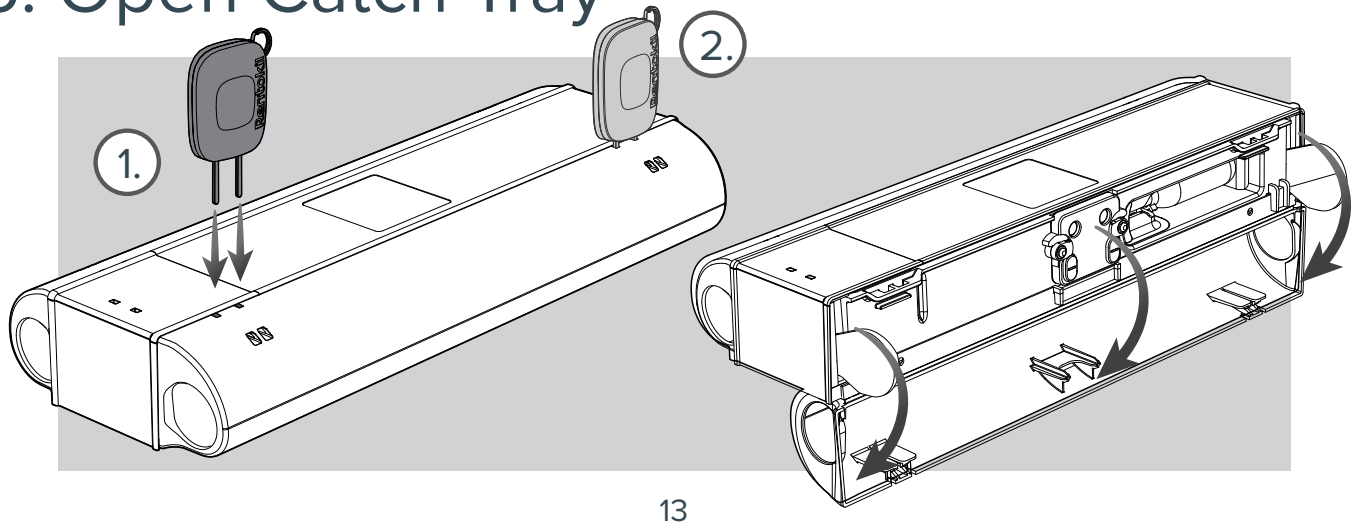

7. Setting the Trap Doors

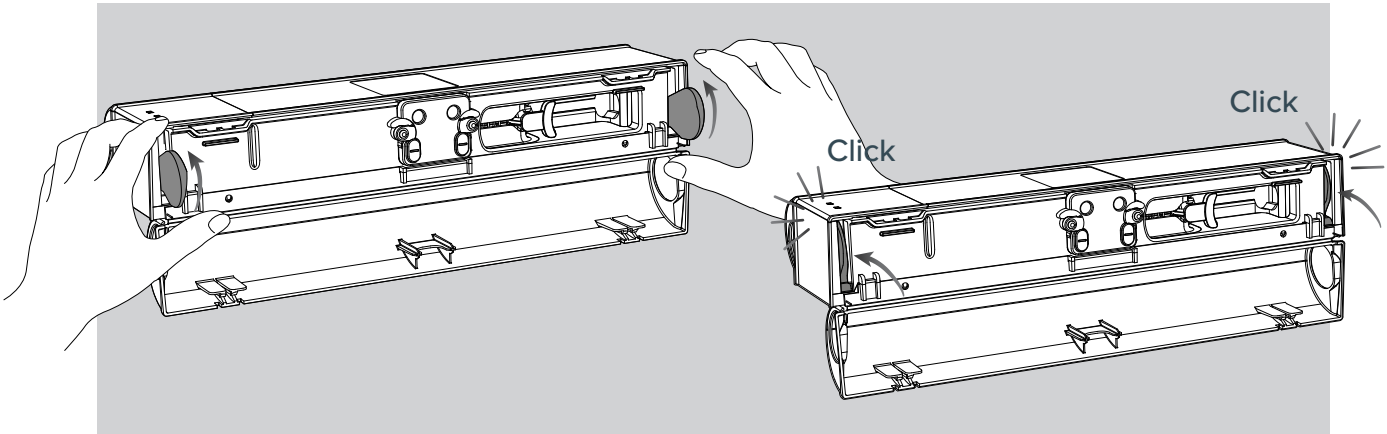

8. Setting the Trigger Mechanism

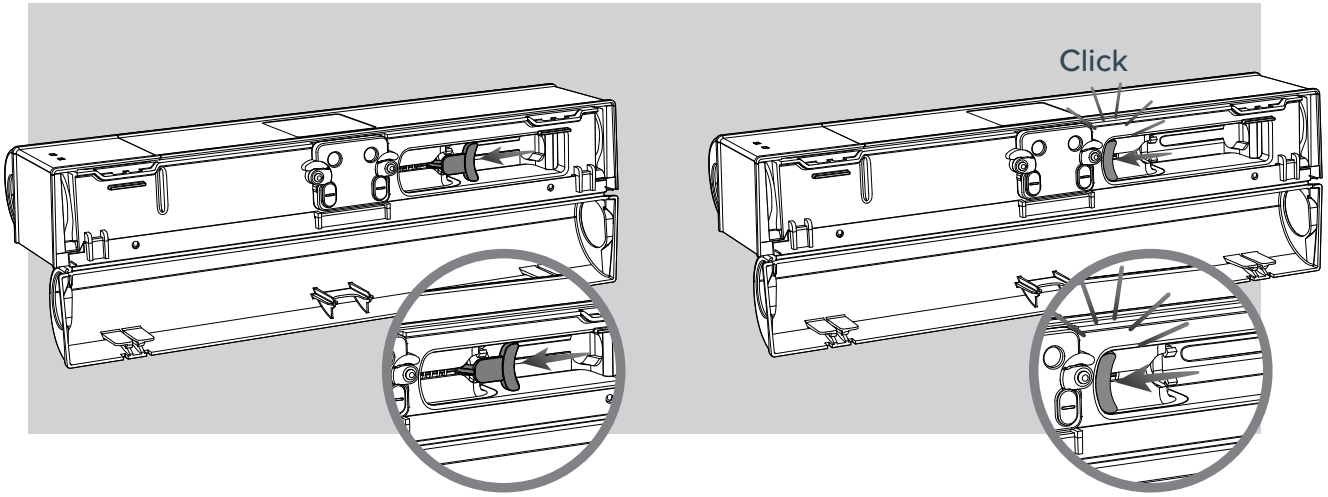

9. Fitting CO_2 Canister

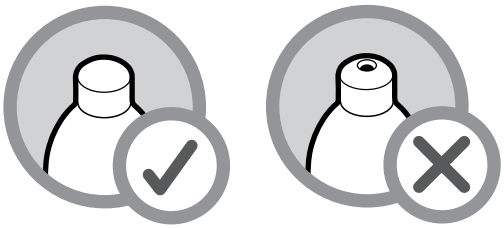

Ensure a new and undamaged CO_2 Canister is fitted

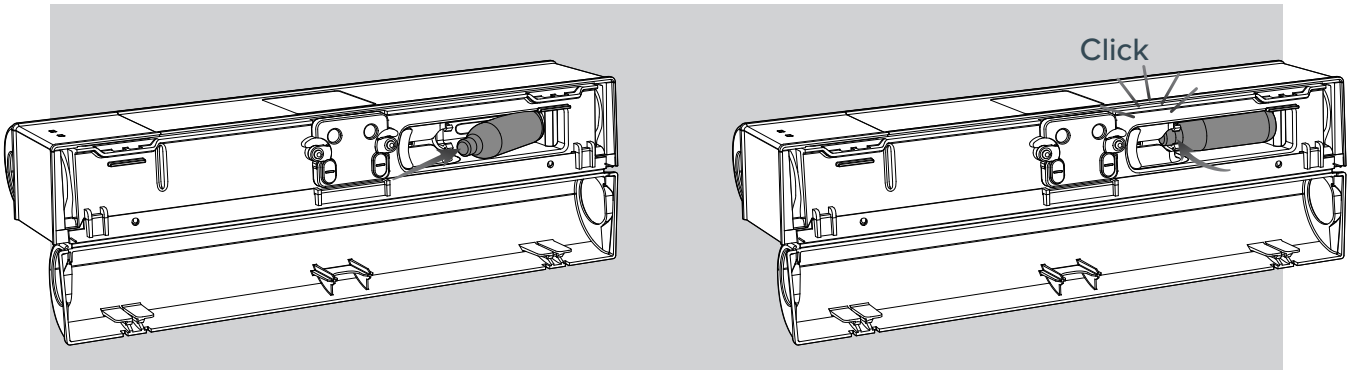

10. Refitting the Catch Tray

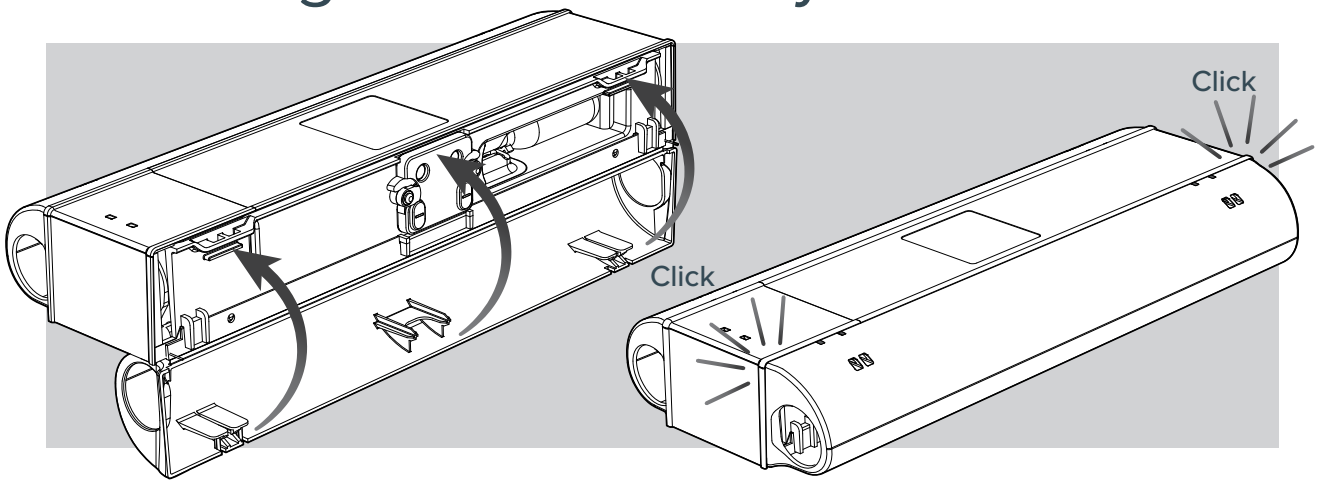

11. Arming the Module

1

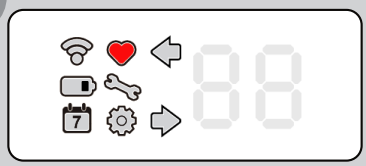

If unit is deployable the Device Status (Icon ♥) will go solid and the unit is capable of trapping after 30 seconds. And can now be left. Alternatively, use the magnetic key to cycle through the "Status Check" as described on pg 16.

NOTE: The heart will display even if canister(s) are not loaded as there is no active electrical check for their presence. Therefore it is up to the technician to ENSURE viable CO2 canister(s) are loaded when commissioning/servicing.

2

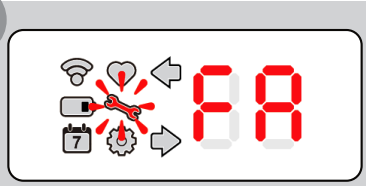

If the Service Mode (🔧) flashes at the same time as the user interface displays "FA" the unit needs to be decommissioned and returned. If the unit has a solvable Error the Service Mode icon will flash, along with which side requires the service via the Arrow Status icon where relevant.

Tapping will provide exact code of the failure, Error Code Table can be found on the underside of the unit, or on page 26 of this manual for a more detailed explanation. For all but "FA", if the fault persists after corrective action try disconnecting the battery, wait 5 seconds and reconnect the battery. If this fails decommission and return the device. See page 25 for more interface information.

1. Status Check

Use the **RI Key Magnet** to activate the Interface

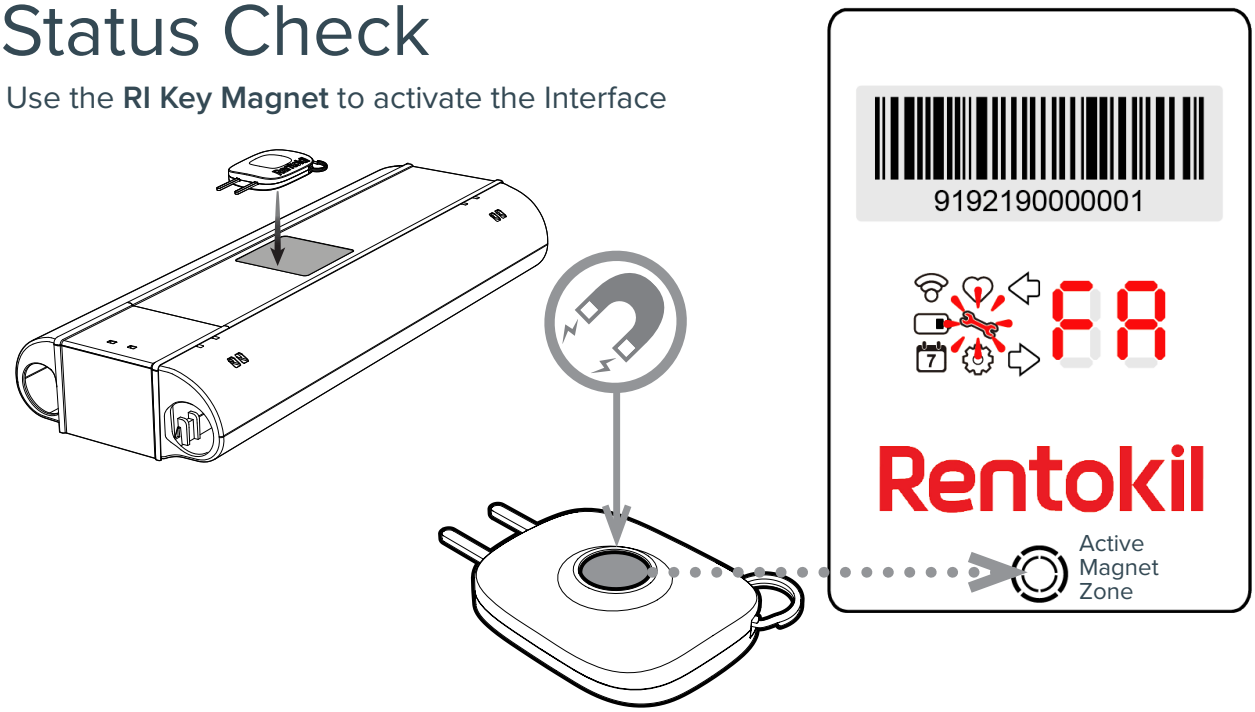

Tap 1

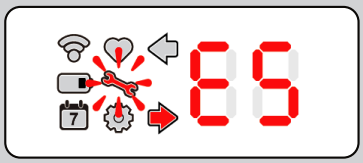

Eg: Error 5 (Trigger pin not set) on right side of unit.

First tap using the RI Magnet Key, will display the units health. If not OK the Service Mode (Icon 🔧) will flash and an error code will appear on the display indicating a service is required. The appropriate Arrow Icon will indicate which side the error is on.

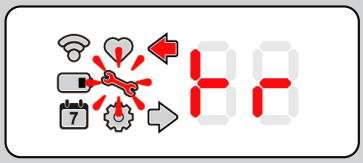

If pest triggered (Mouse), “tr” is displayed a service is required.
Eg: Left side triggered.

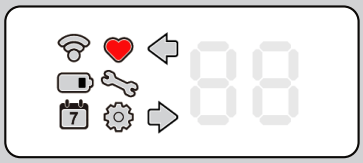

If all OK Device Status (Icon ♥) will be solid. A service may not be required. Unit will be capable of trapping after 60 seconds.

Error code meanings can be found on the label on the underside of the unit, or on page 28 of this manual.

NOTE: The heart will display even if canister(s) are not loaded as there is no active electrical check for their presence. Therefore it is up to the technician to ENSURE viable CO2 canister(s) are loaded when commissioning/servicing.

See **Page 27** for more Interface information.

Tap 2

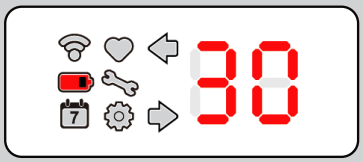

Eg: 30% battery remaining

Second tap using the RI Magnet Key, will display Battery Level (Icon) along with the percentage of battery level.

Tap 3

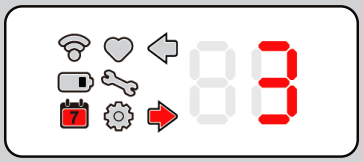

Eg: Right chamber activated 3 days ago

Third tap using the RI Magnet Key, will display Catch Duration (Icon) along with the left Arrow Status icon and number of days since the left hand side triggered. This will be shown for 2 seconds before the right Arrow Status icon and number of days since the right hand side triggered is shown.

Tap 4

Cycles Interface back to Battery Level screen. At any point during these Taps, opening a tray will Enter Service Mode and exit Status Check.

2. Enter Service Mode

NOTE: The interface display must be active before entering service mode. You are only required to enter Service Mode if there is an error shown on the interface display, or if a tray is visibly damaged and needs replacing. See previous section (1. Status Check).

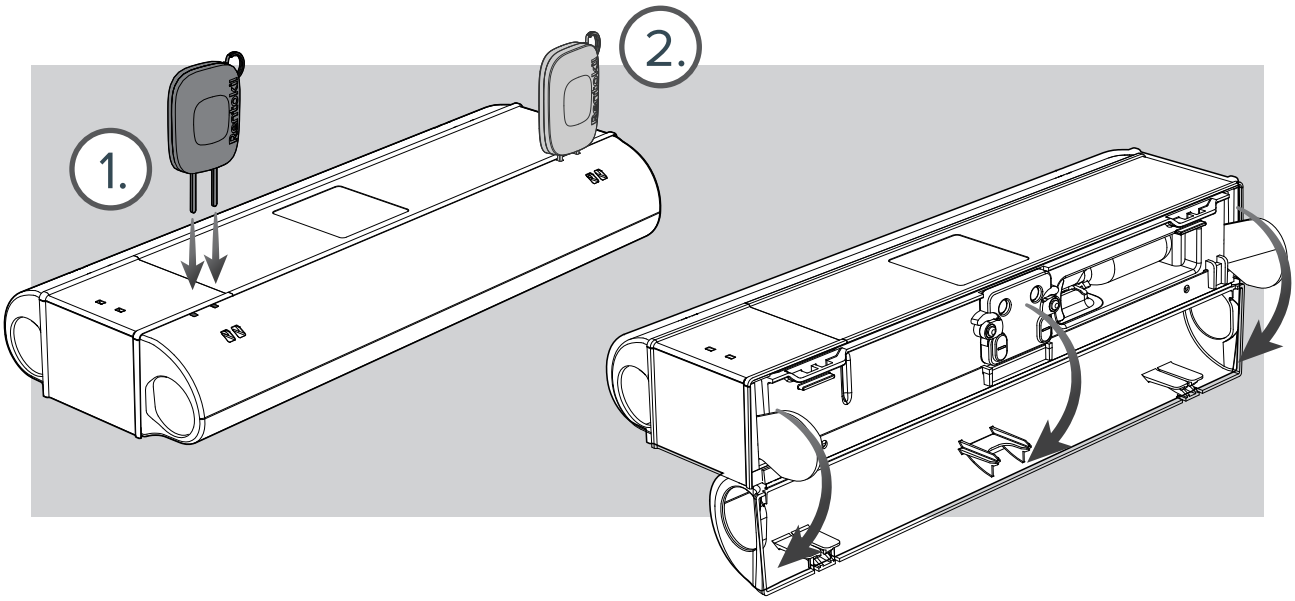

When the Interface is active open one of the two catch trays. This will access service mode.

3. Within Service Mode

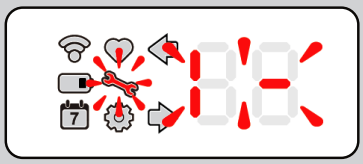

Eg: LHS catch tray open, not armed

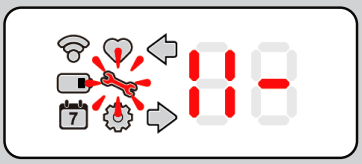

Eg: LHS catch tray open and armed

When in Service Mode the interface will indicate which catch tray is open and whether that side is armed.

If the open catch tray is not armed it will be indicated on the display with flashing 1 -, if the same catch tray is open and is armed the display will show 1 1 - and not flash. If both sides are open and armed 1 1 1 1 will be displayed.

4. Cleaning

Cleaning: Always Wear protective gloves when cleaning the unit.

Radar X units should only be cleaned with a damp cloth taking care to remove all dust and dirt that may accumulate within the box and on the outer case during normal use.

After any activation where a rodent corpse is found within the box, the deceased animal should be carefully removed and bagged for disposal. Sanitising wipes should then be used to clean the internal area of the box, ensuring all detritus within the Radar X is fully cleaned and removed. The external areas can be cleaned using a damp cloth. All used Sanitising wipes, and other waste, including gloves should be disposed of as Pest Control waste in line with Rentokil Initial Waste Policy, whilst complying with local waste regulations. The Radar X must always be sanitised/cleaned after any activation, and before resetting.

Always wash hands after servicing. Do not use industrial or commercial cleaning sprays within the Radar X.

5. Setting the Trap

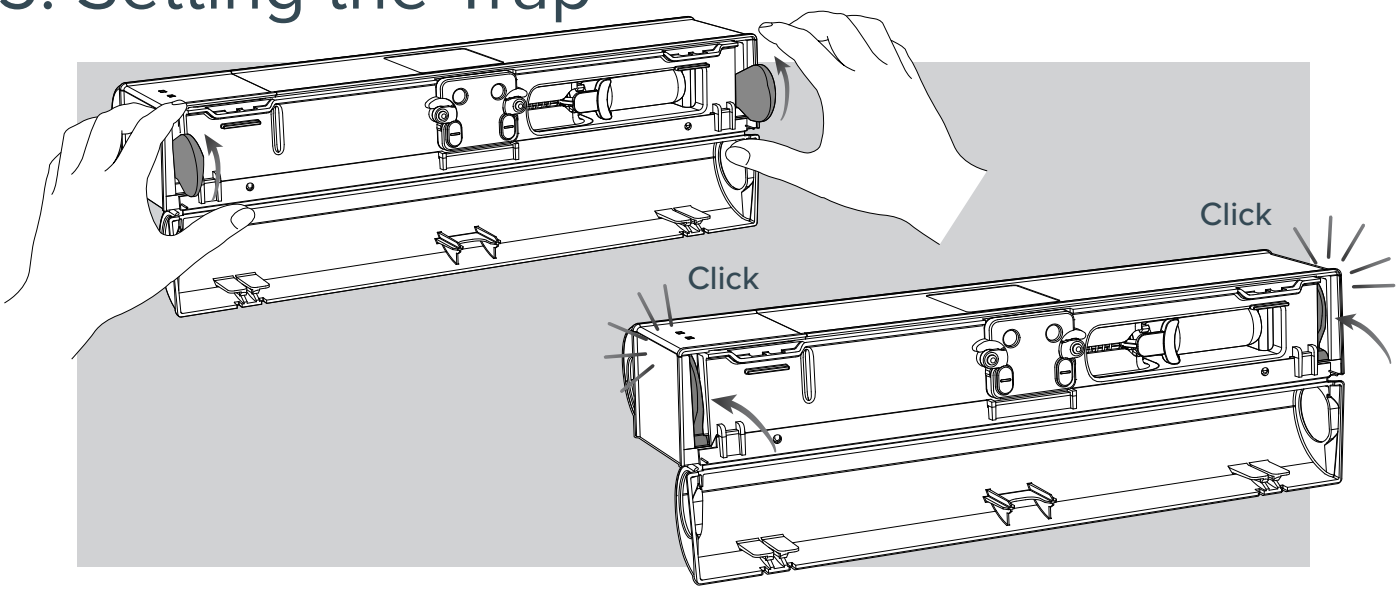

6. Removing a used CO_2 Canister

Note: CO_2 Canister MUST be replaced after each trigger event.

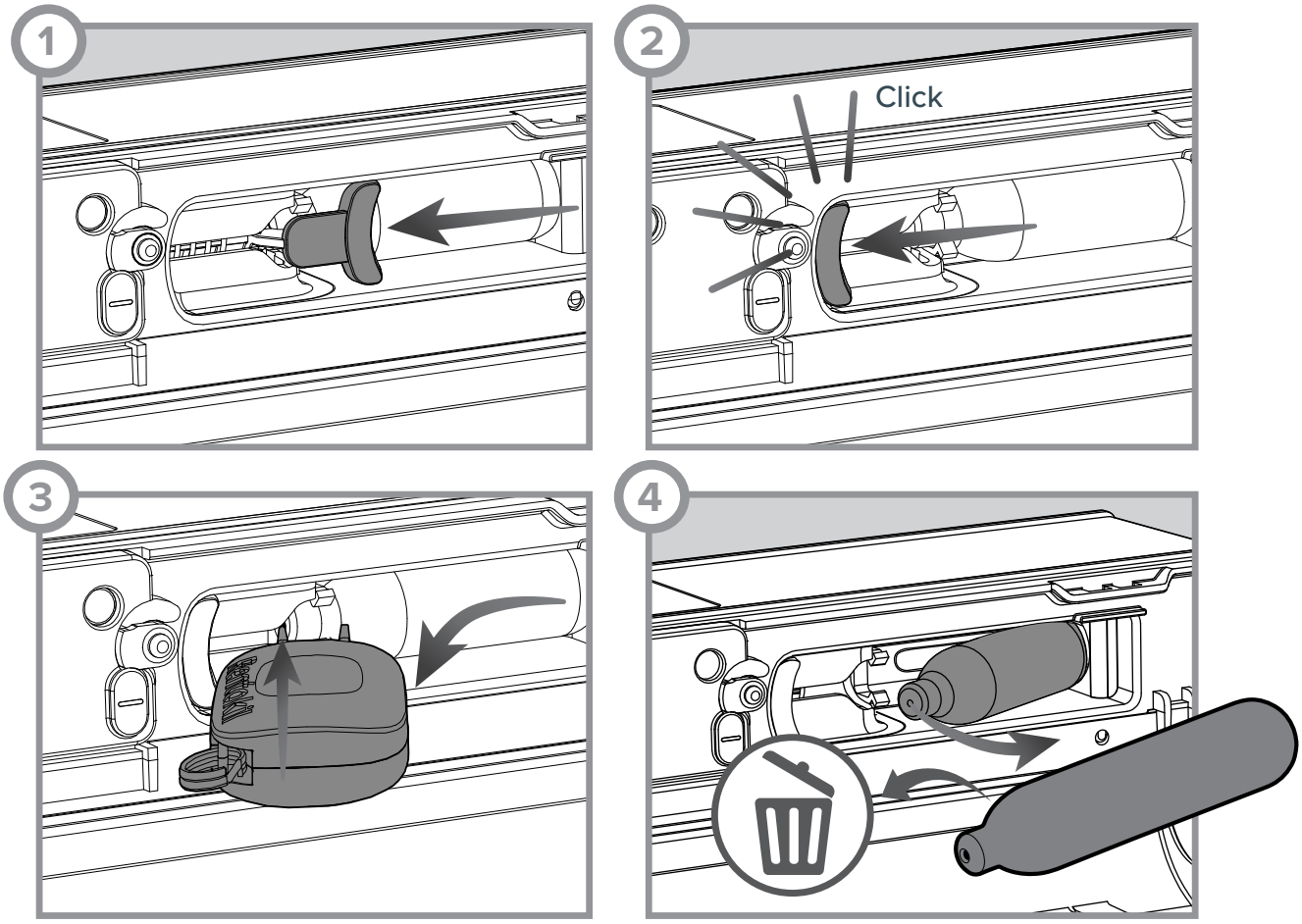

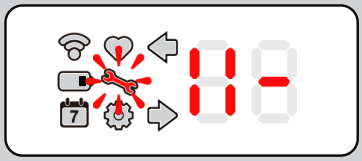

Once the trigger pin is armed, the once flashing H- will become H- and go solid on.
NOTE: You will not be able to arm the trigger pin until you reset the gate in “5. Setting the trap”

7. Fitting a new CO_2 Canister

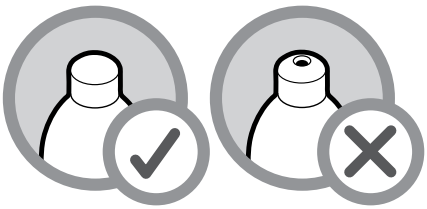

Ensure a new and undamaged CO_2 Canister is fitted

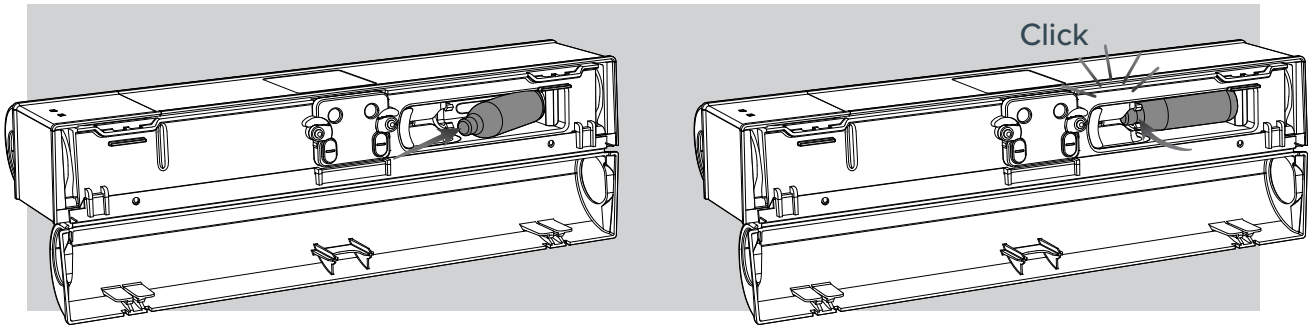

8. Closing the Catch Tray

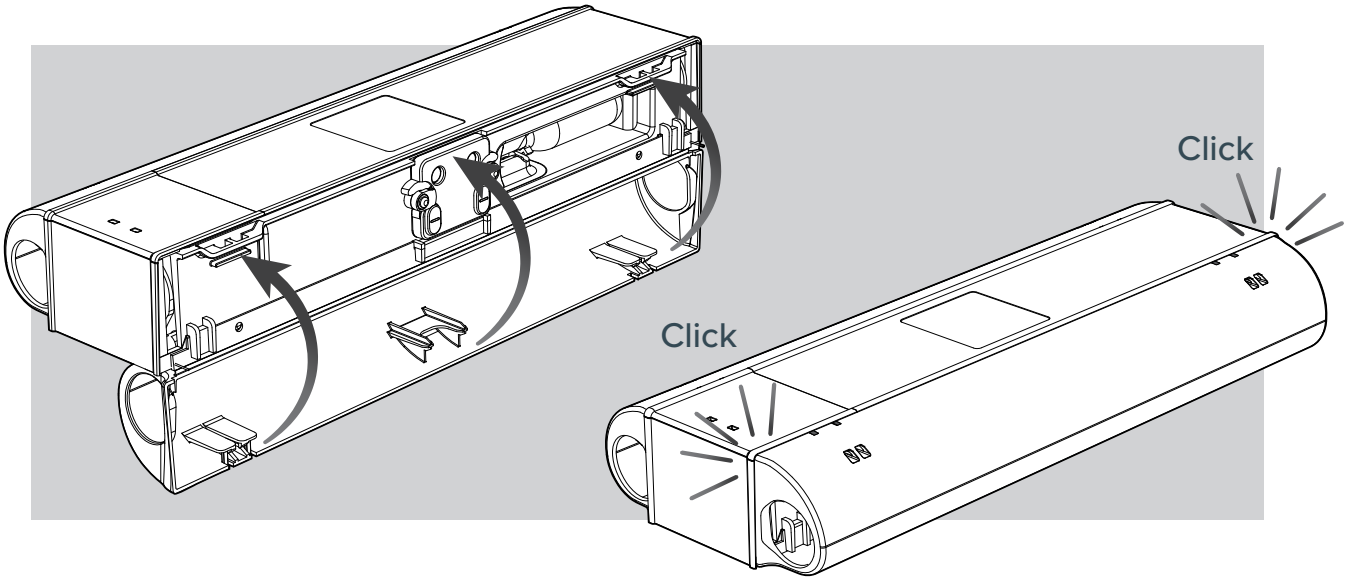

9. Reactivate the Trap

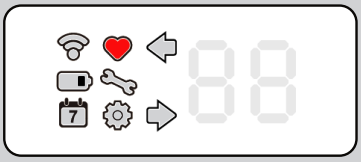

If all is OK the Device Status (Icon ♥) will be solid. The service is now complete.

Note: The unit will allow a SELF deploy as long as one side is set correctly. i.e. it is possible to allow a unit to SELF deploy even if one side is not functional.

NOTE: The heart will display even if canister(s) are not loaded as there is no active electrical check for their presence. Therefore it is up to the technician to ENSURE viable CO2 canister(s) are loaded when commissioning/servicing.

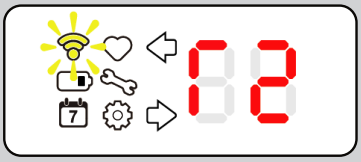

The signal strength will be shown for 2 min. After which it will automatically exit Service Mode and Deploy. Alternatively Tap the key to the Interface to exit Service Mode immediately and Deploy.

How to Swap Trays

1. Open Catch Tray

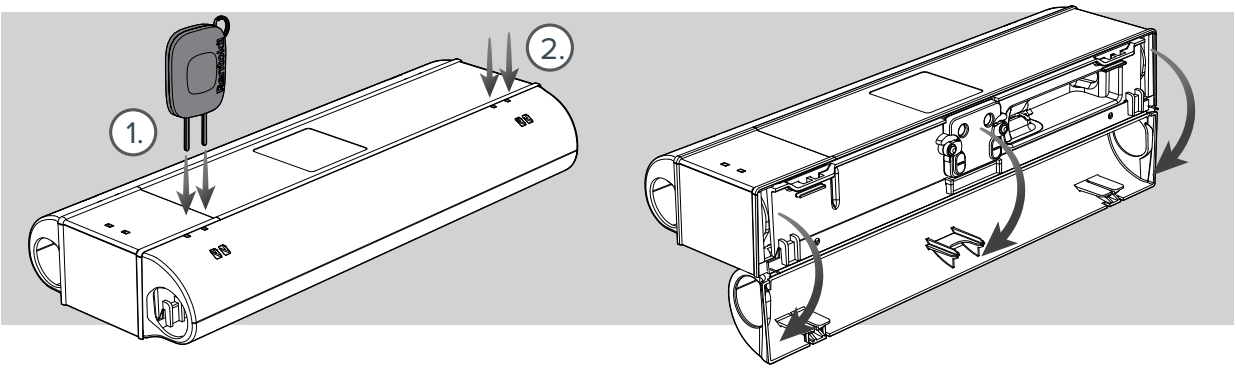

2. Remove and Replace Catch Tray

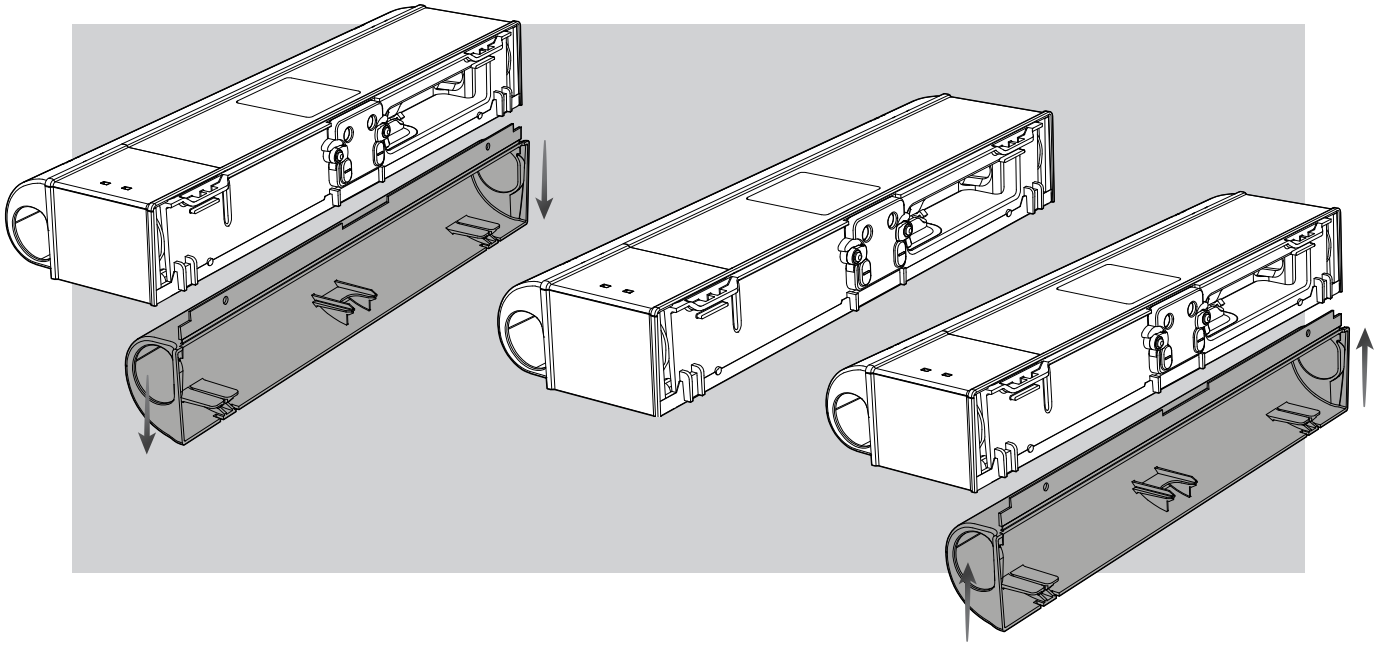

3. Close and Lock the Catch Tray

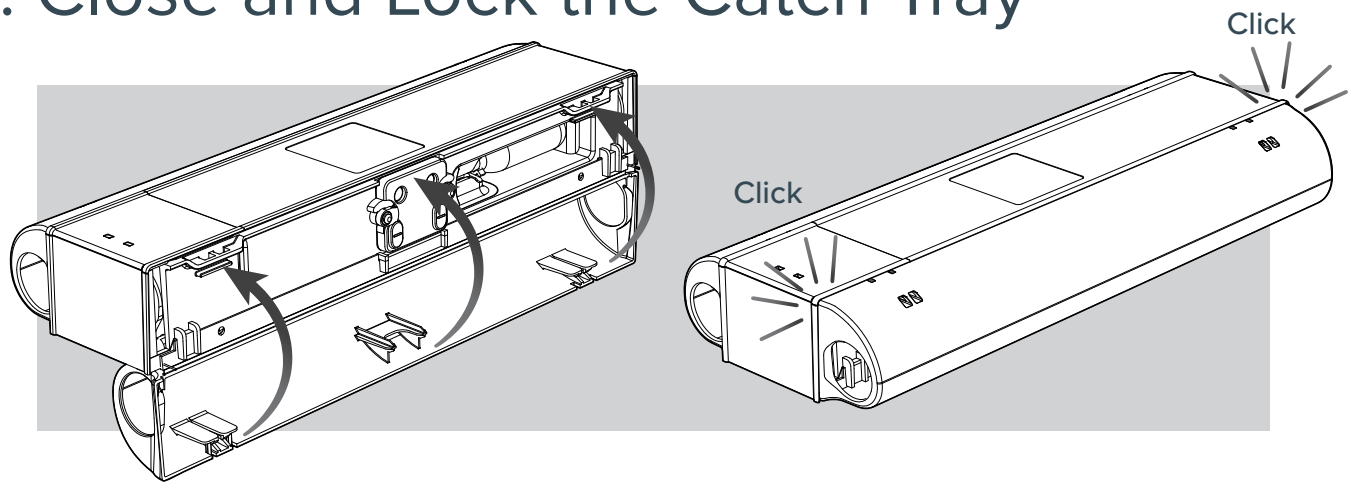

How to Swap Sensor Pods

1. Remove Battery

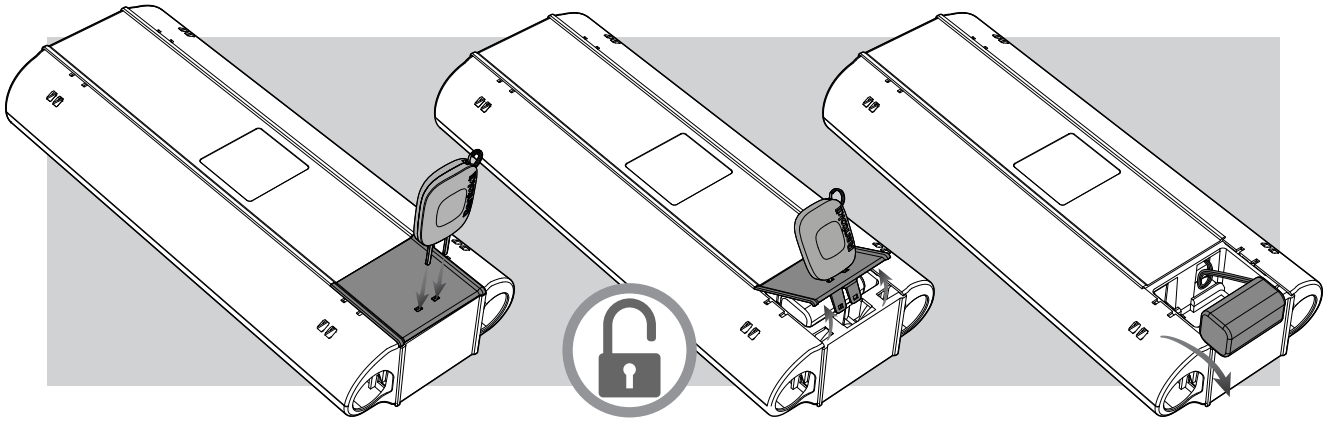

2. Open Catch Tray

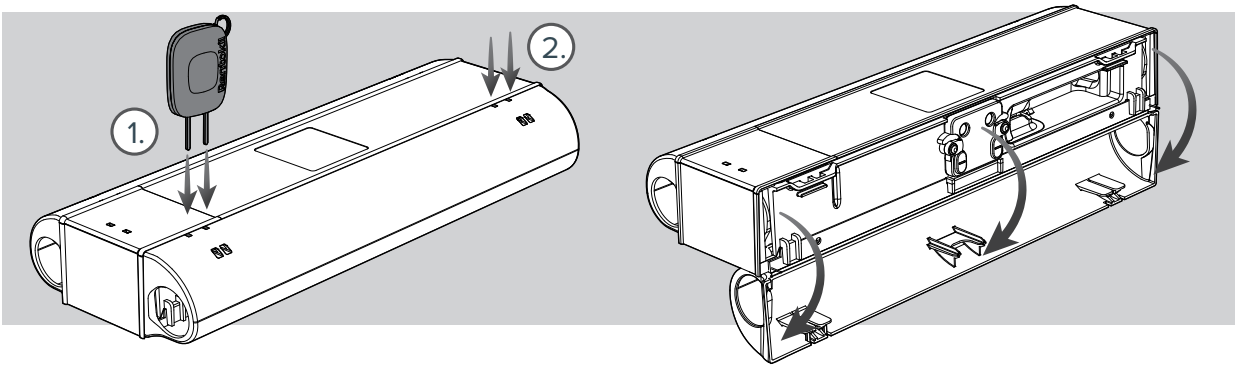
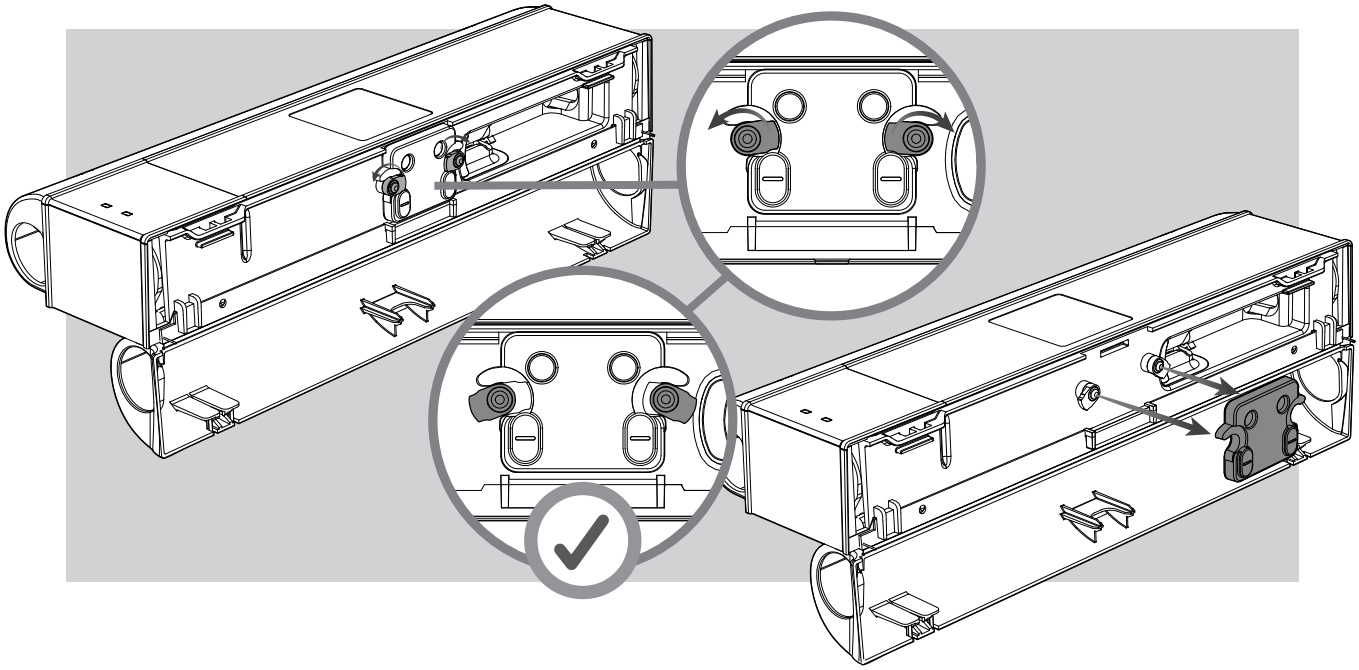
3. Remove Rodent Sensor Pod