4. Replace Rodent Sensor Pod

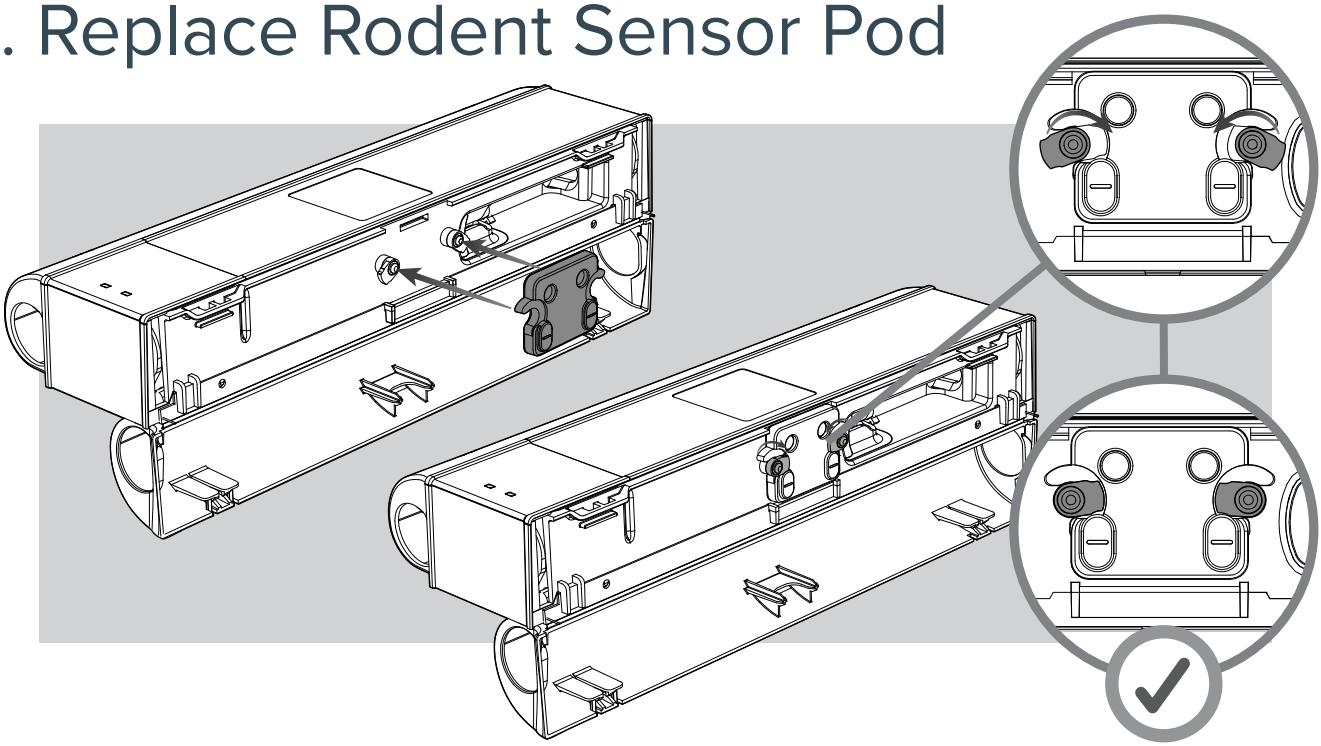

5. Close and Lock the Catch Tray

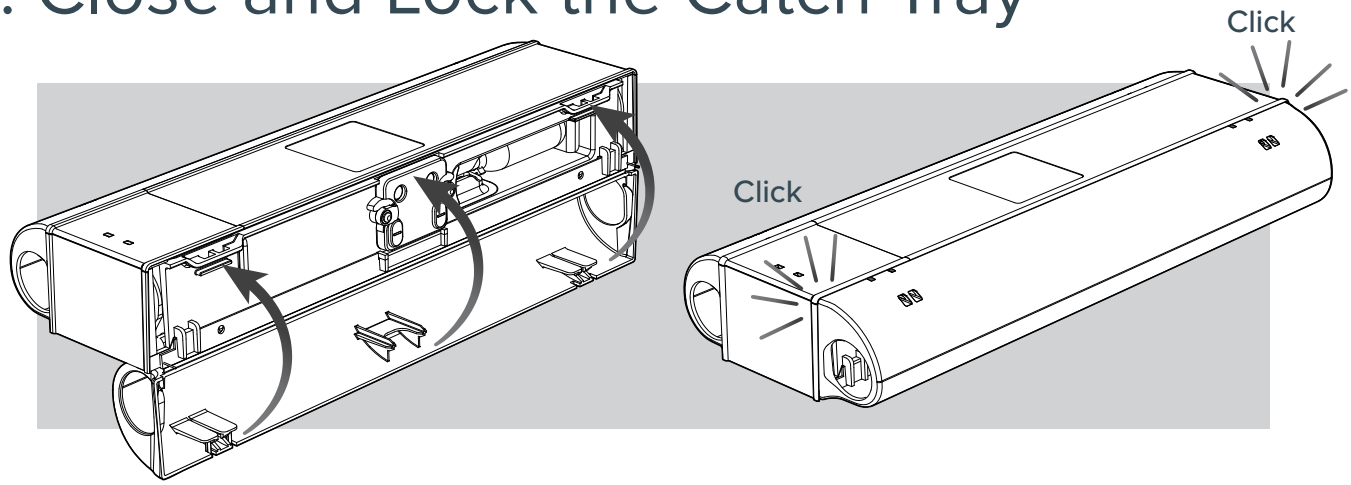

6. Reactivate the Trap

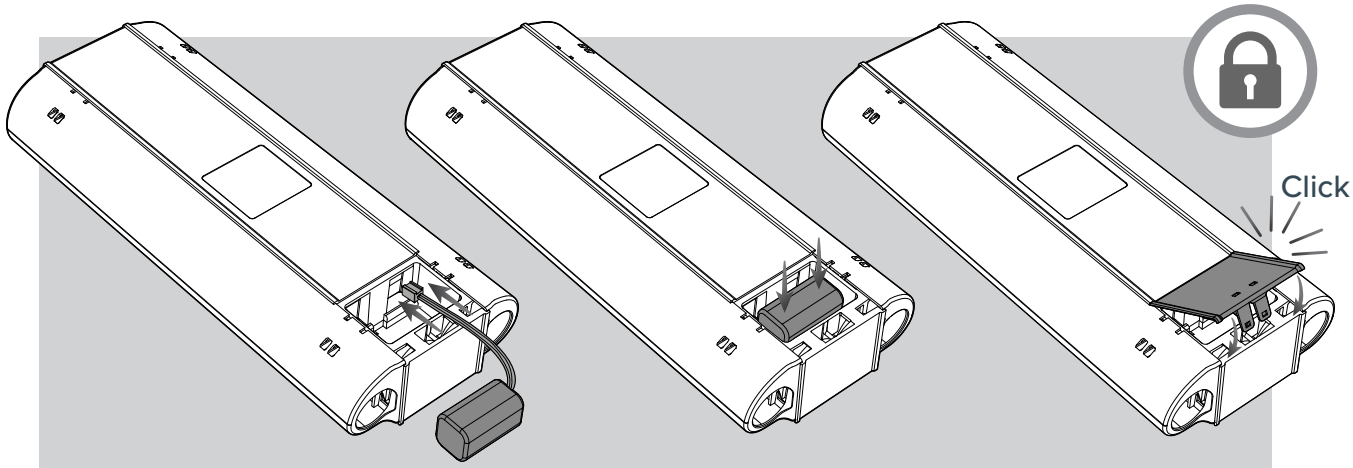

Replace the battery and follow on from section 4 in Installation (page 13).

Fitting Lanyard

1. Parts Required to Fit the Lanyard

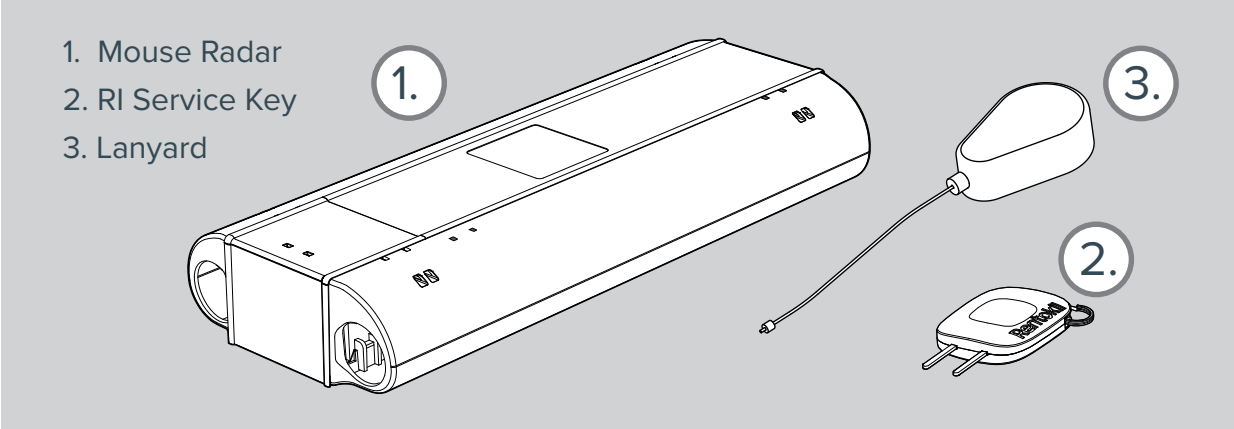

2. Fitting the Lanyard

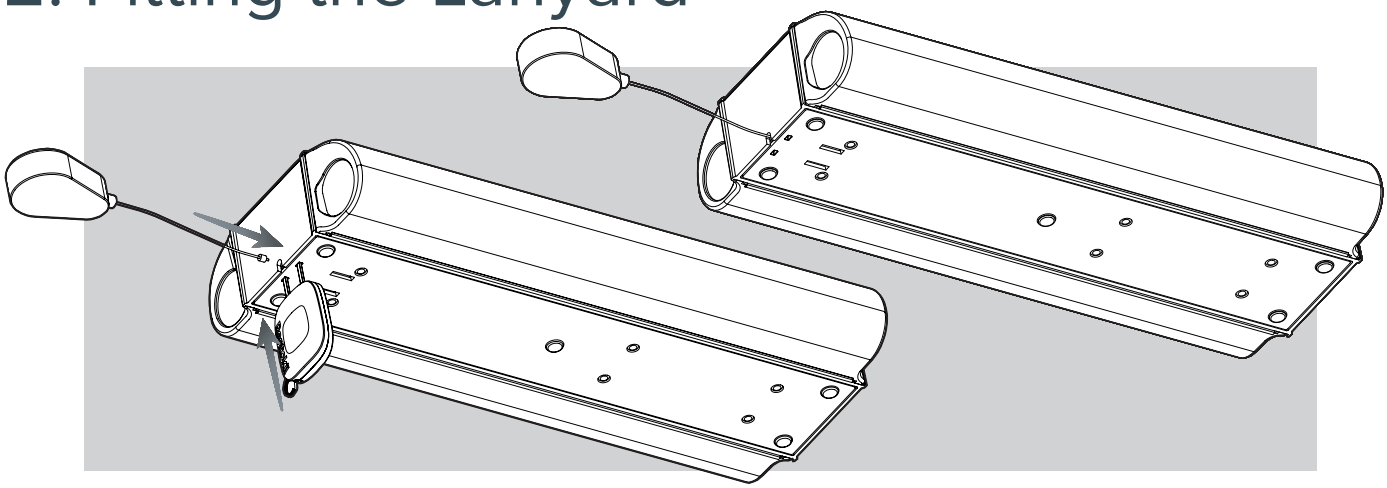

3. Removing the Lanyard

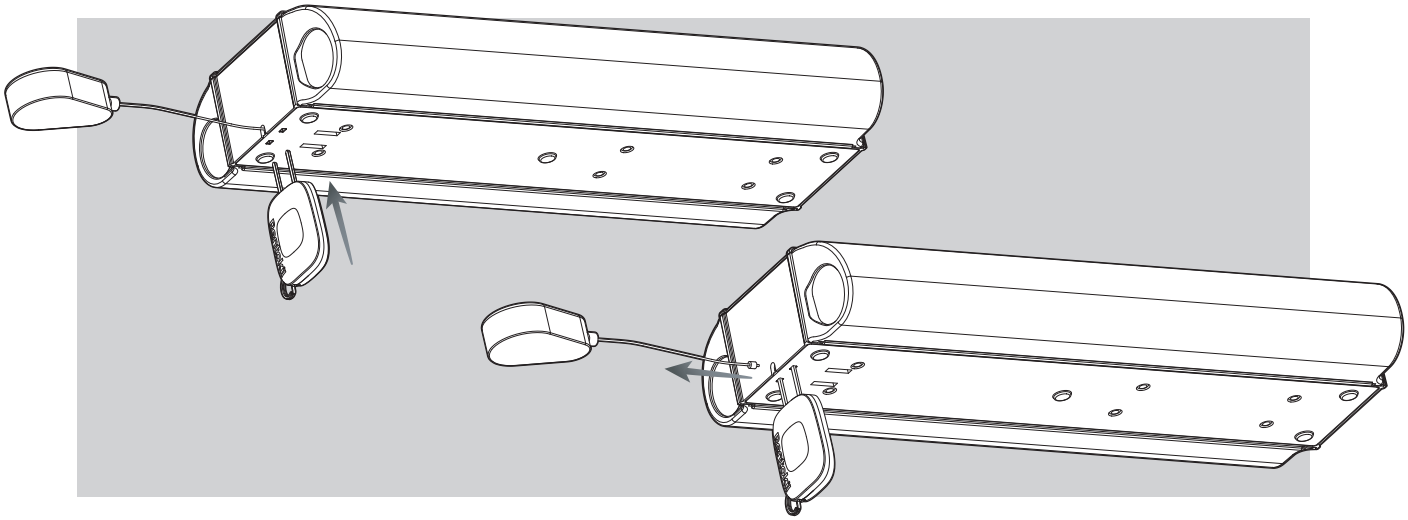

Enter System Information

With the Interface active hold the **RI Key Magnet** in place for three seconds to access System Information.

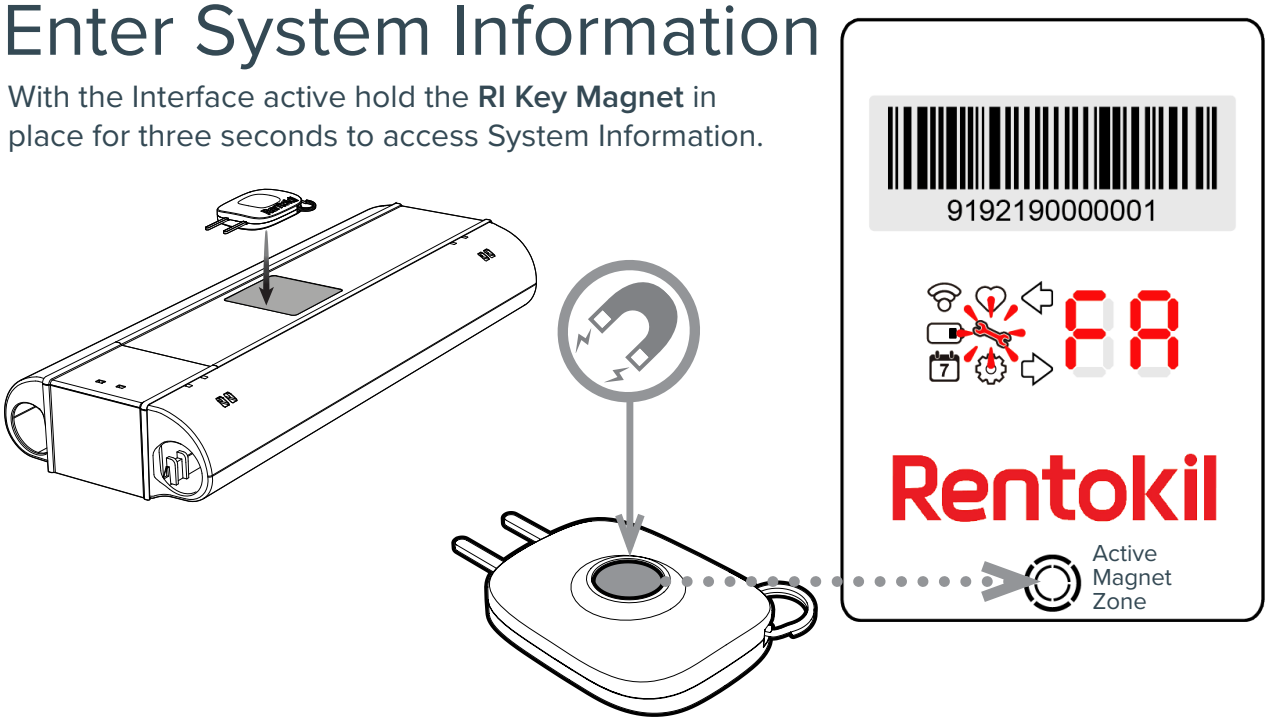

3 Second Hold - Range Check Mode

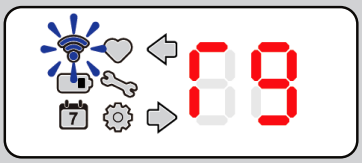

Eg: Blue Flash, good signal

First screen to show after holding the RI Magnet Key in place for three seconds is the Range Check Mode. The user interface LEDs will show this and give a reading r- to r9. Higher the "r" number, the stronger the signal. See page 27 for more information. The signal strength will show for 1 hour to allow technician to survey the site.

To exit this range test mode, tap into any one of the following modes and after 30 seconds of no tap activity, the unit will exit the System Information mode.

Tap 1

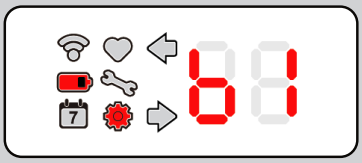

Eg: Alkaline battery is fitted

First tap using the RI Magnet Key will display Battery (Icon) and Configuration (Icon) along with the battery type.

Codes for Battery Type to be shown on Display

b1 - Alkaline
bF - Unknown

Tap 2

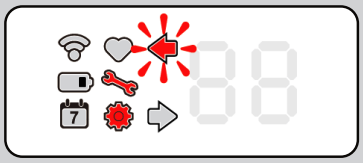

Eg: Major subversion firmware used

Second tap using the RI Magnet Key will display Service Mode (Icon 🔧) and Configuration (Icon ⚙). Arrows will then indicate firmware version.

Firmware version indicators:
Flashing left arrow - Major subversion
Flashing right arrow - Minor subversion

Tap 3

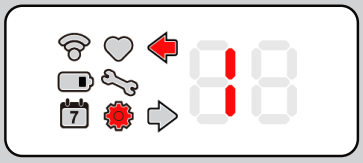

Eg: LHS has IR Pod fitted

Third tap using the RI Magnet Key will display Configuration (Icon ⚙) and left arrow. Left digit will then indicate left pod type.

Codes for Pod Type to be shown on Display:
0 - Single Configuration Pod (Blank Pod)
1 - IR Pod
E - Unknown
F - No Pod Detected

Tap 4

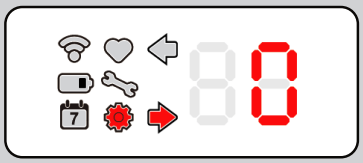

Eg: RHS has Blank Pod fitted

Fourth tap using the RI Magnet Key will display Configuration (Icon ⚙) and right arrow. Right diget will then indicate right pod type. See codes above.

Tap 5

Cycles Interface back to Range Check Mode. The Interface will exit System Information if no action is made for 30 seconds (60 minutes if in range check mode), or if a Catch Tray is opened when not in range check mode.

Operating the User Interface (UI)

1 Connect LED Identifier

CONNECT devices only

The user interface LEDs will give a reading r- to r9. Higher the “r” number, the stronger the signal. The signal strength will show for 1 hour.

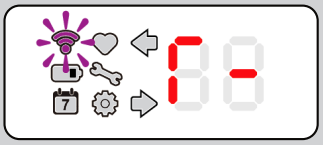

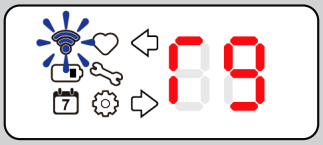

Flashes **Purple**, 3 second intivals = Trying to connect
Flashes **Red**, 3 second intivals = No signal
Flashes **Yellow**, 3 second intivals = Weak signal
Flashes **Blue**, 3 second intivals = Good signal

See page 13 for more information on conducting a Site Survey.

2 Device Status

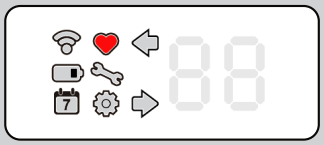

Identifies the unit as deployable. A service is compleete, or no service is required.

NOTE: The heart will display even if canister(s) are not loaded as there is no active electrical check for their presence. Therefore it is up to the technician to ENSURE viable CO2 canister(s) are loaded when commissioning/servicing.

3 Battery Level

Percentage of battery capacity remaining is displayed. When in System Information the battery type is displayed.

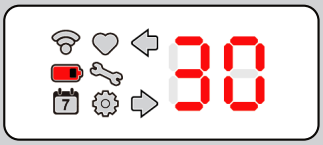

Eg: 30% battery remaining

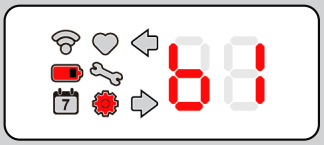

Eg: Alkaline battery used

Codes for battery type:
b1 = Alkaline
bF = Unknown

4 Catch Duration

Number of days since each chamber has been activated

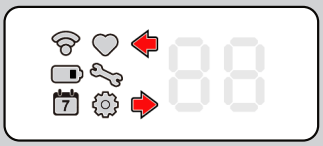

Arrow Icons identify which chamber has activated

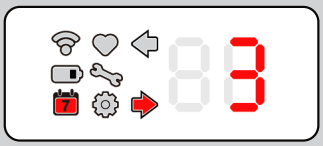

Eg: Right chamber activated 3 days ago

5 Service Mode

Indicates a service is required when displayed with an error code, or indicates which catch tray is open and armed during a service.

- Indicates left catch tray open, not armed.
- Indicates left catch tray open and armed.
- Indicates right catch tray open, not armed.
- Indicates right catch tray open and armed.
- Indicates both catch trays open and armed.

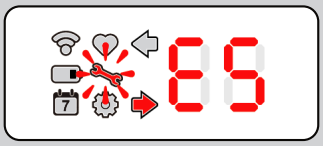

Eg: E5 error in RHS. See page 28 for codes.

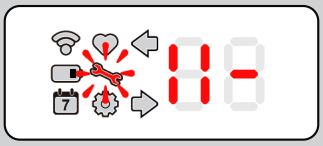

Eg: LHS catch tray open and armed

6 Configuration

Icon displayed along side other icons during set-up or when in System Information, see page 25. Displayed individually when indicating pod type.

See page 26.

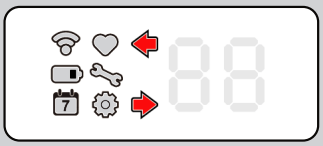

Arrows identify pod side

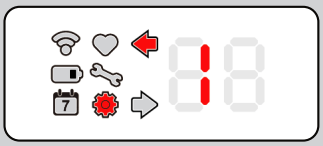

Eg: IR sensing pod on left side

Didgets indicate Pod Type (sesnsor board):

- 0 - Configuration Pod (Blank Pod)
- 1 - IR Pod
- E - Unknown
- F - No Pod Detected

Error Codes

If RADAR X detects an error, it will self diagnose and display an Error Code during Status Check

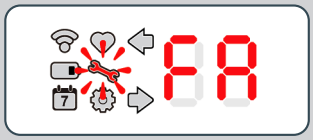

Error Code	Status	Action
EE	Change Battery	<20% charge, change battery
bE	Cannot calculate battery %	Consider battery change
Er	Wait for error to clear	See more information below
SERVICE DEVICE		
tr rt	tr: Pest trigger, rt: Remote trigger	Service device
E0	Tech test not complete	Replace pod
E1	Possible live catch	See more information below
E2	Triggered due to high temperature	Area should be surveyed
E3	Triggered: Shock: Check for damage	Service unit and check for damge
E4	Unit moved: Check location/damage	Service unit and check for damge
E5	Trigger pin not set	Set trigger pin: Service device
E6	Check trigger pin/tray BOTH sides	Check trigger pin/tray BOTH sides
E7	Unit remotely disabled	Check reason/Service device
POD/TRAY ISSUE - SERVICE DEVICE		
CL	Clean Sensors/Catch Tray	See more information below
E8	Catch Tray Open	Check Catch Tray condition
E9	Change Sensor Pod	Change Sensor Pod
TECH TEST		
EA	Do manual trigger test	See more information below
FATAL - RETURN UNIT		
FA	Decommission/Return Unit	Decommission/Return Unit

Error Code Details

Why might I be seeing this / how to fix?

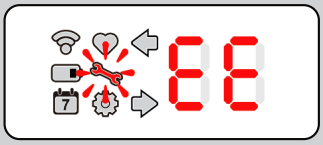

The battery is too low or too high a voltage to reliably run the system in the environment for which it is specified. You must replace the battery pack.

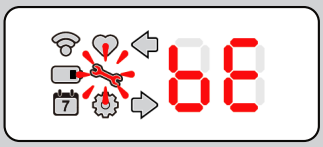

The unit is currently designed for 3 wire alkaline batteries. The packs used have a method of reporting to Radar X what battery technology has been fitted. If for some reason this can't occur then the unit is unable to calculate the battery %. This could be caused by using a pack not supplied by Rentokil, or a damaged battery lead or to the battery itself. The unit may still operate, but you should consider replacing the battery pack.

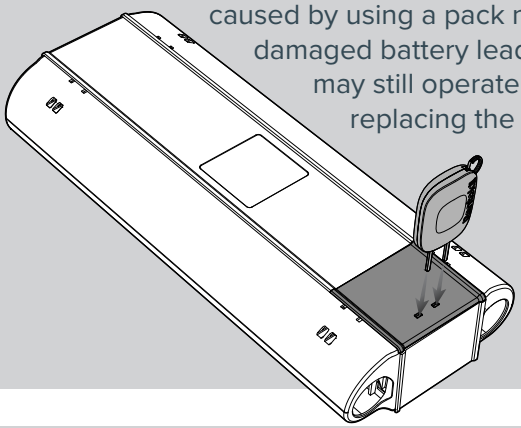

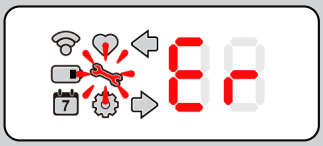

This is a generic error code. Where there is something in the system preventing the unit from operating as intended. At the time of this manual's first release, the only issue that would cause this code is if on connecting the battery, the Radar X sees a temperature above the safe level (for instance, taking it from a hot service van). Under normal situation, if deployed would cause the unit to trigger to protect the CO_2 canister from rupturing. You should wait 15 minutes after the unit has had time to cool (keep the unit powered). The unit if left powered during this time will update the Er code should the unit detect the temperature reducing.

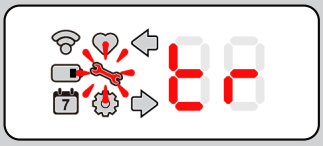

The unit triggered due to the sensors detecting activity, there were no issues detected in activation. This is the "normal" indicator that the Radar X has trapped and everything is okay.

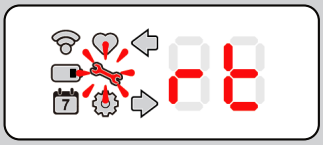

The unit was triggered remotely by the server, you will only ever see this on a Connect Radar X. You can service it and it will be rearmed and operational, however you should understand why it might have been activated triggered remotely in the first instance before doing this.

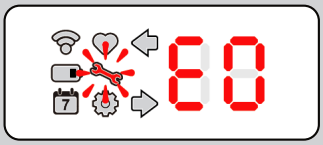

Manual pod test not passed - replace pod.

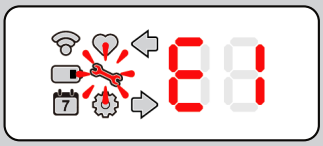

There are temperature sensors that sit above each CO_2 canister. When the canister discharges the temperature drops and this is detected by the Radar X, if this temperature drop is not seen this error will be raised. Possible causes of seeing this error are:

1. Canister was not loaded at time of commissioning/servicing.
2. Canister was empty prior to the current triggered event.
3. Damaged catch tray/unit which allowed CO_2 to escape.
4. Blunt or damaged piercing head.

If it were an actual live catch then this should be managed as per your region's protocol, it may be necessary to return both the unit **and** the canister in question for inspection.

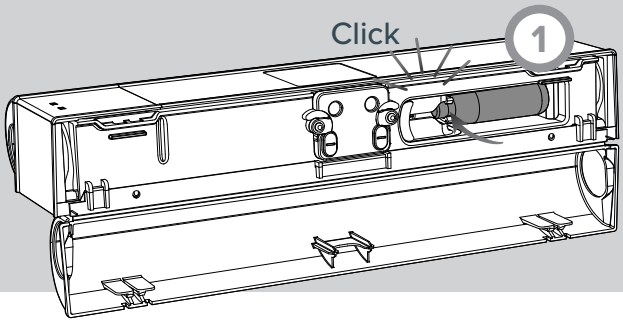

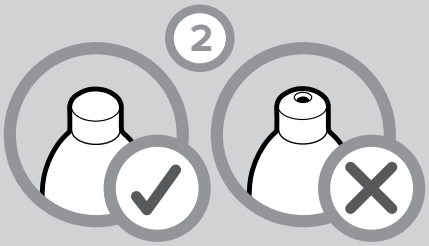

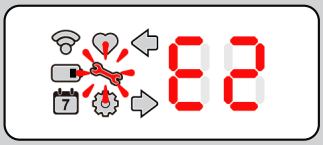

The CO_2 canisters are rated at a temperature of up to 50°C. After which they run the risk of rupture. The Radar X will prevent this by triggering prior to reaching the upper threshold of 50°C. You should survey the installed area to ensure that the unit is not placed in an area that gets to these temperatures.

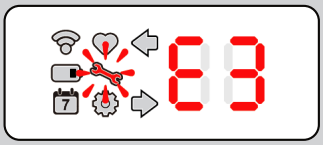

The unit triggered its CO_2 due to a heavy impact. Possible causes of seeing this error are:

1. Unit was dropped from a height.
2. Unit sustained an external impact from something for e.g. vehicle, or excessive foot traffic, etc.

The unit must be Serviced and inspected for damage/cracks/chips. In particular the catch trays, and their clips, main chassis and ensure there is no additional "rattling" noise for instance when the unit is shaken slightly. Provided no issues are visible and the unit can be deployed then the unit can continue to be used.

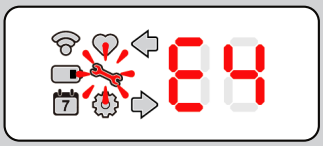

The unit moved/sustained a shock which didn't cause it to trigger, but it may not be positioned where it should so you should check the floor plan app, as well as inspect it for damage as in E3 above; the unit must be Serviced and inspected for damage/cracks/chips.

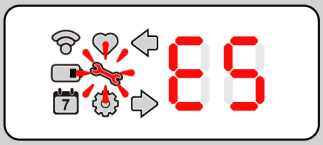

The trigger pin has not been locked in place. You may have armed the red doors, but failed to move the trigger pin into the locked armed position. Go back into Service mode and you must arm the trigger pin.

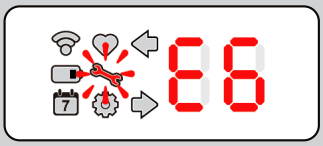

Not deployed, unit could not self deploy or was not service correctly. **Both** catch sides of the unit are in a state that renders the unit non functional. This could be door not closed properly, trigger pin not set - or combination of these, see E0 above.

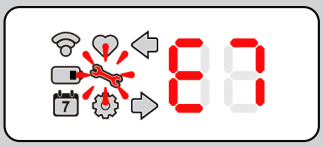

The unit has been disabled from triggering remotely by the server, you will only ever see this on a Connect Radar X. You can service it and it will be rearmed and operational, however you should understand why it might have been deactivated remotely in the first instance before doing this.

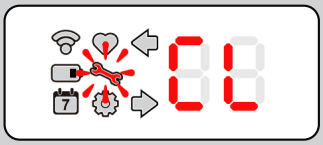

It has been detected that the sensor enabling the unit to detect mice has reduced capability for some reason. For an IR sensor pod, this means that one or both of the sensors within the pod are reading below what they should. For IR sensor pod this could be due to:

1. Dirty/Scratched lens. Clean or replace the sensor pod.
2. Black label on catch tray dirty/damaged. Clean or replace the catch tray.
3. Other contamination, foreign objects in the sensing area. Clean the area of debris, insects, webs, water, dust, etc.

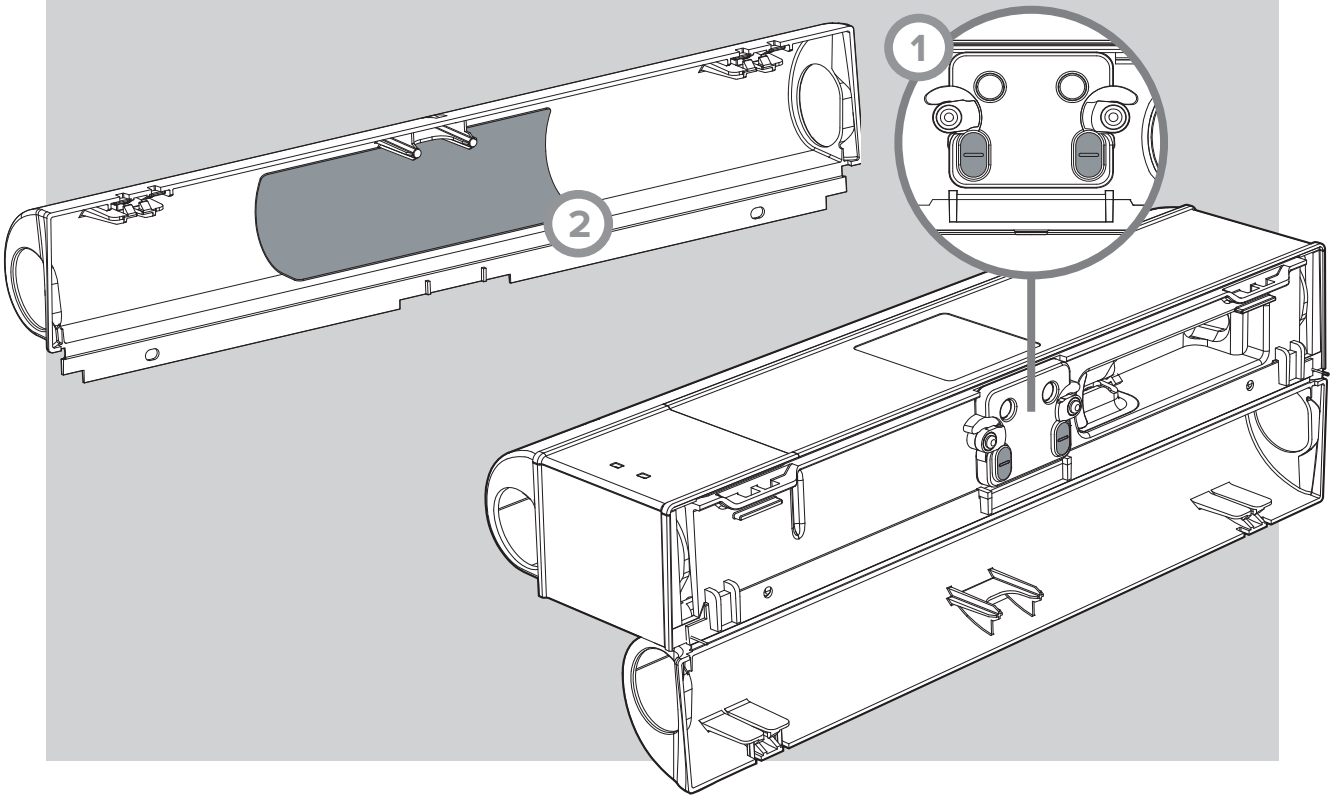

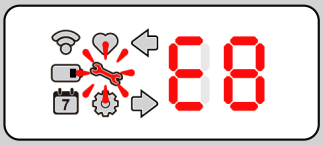

Tray is being detected as opened. Inspect:

1. Catch tray is closed and the clips of the tray and main housing are in good condition.
2. Catch tray “fingers” which press into the sensor pod are in working order (not bent or broken).
3. Sensor pod rubber pads, where the catch tray fingers engage with, are not damaged.

Depending on the findings, you may need to replace the catch tray and/or sensor pod.

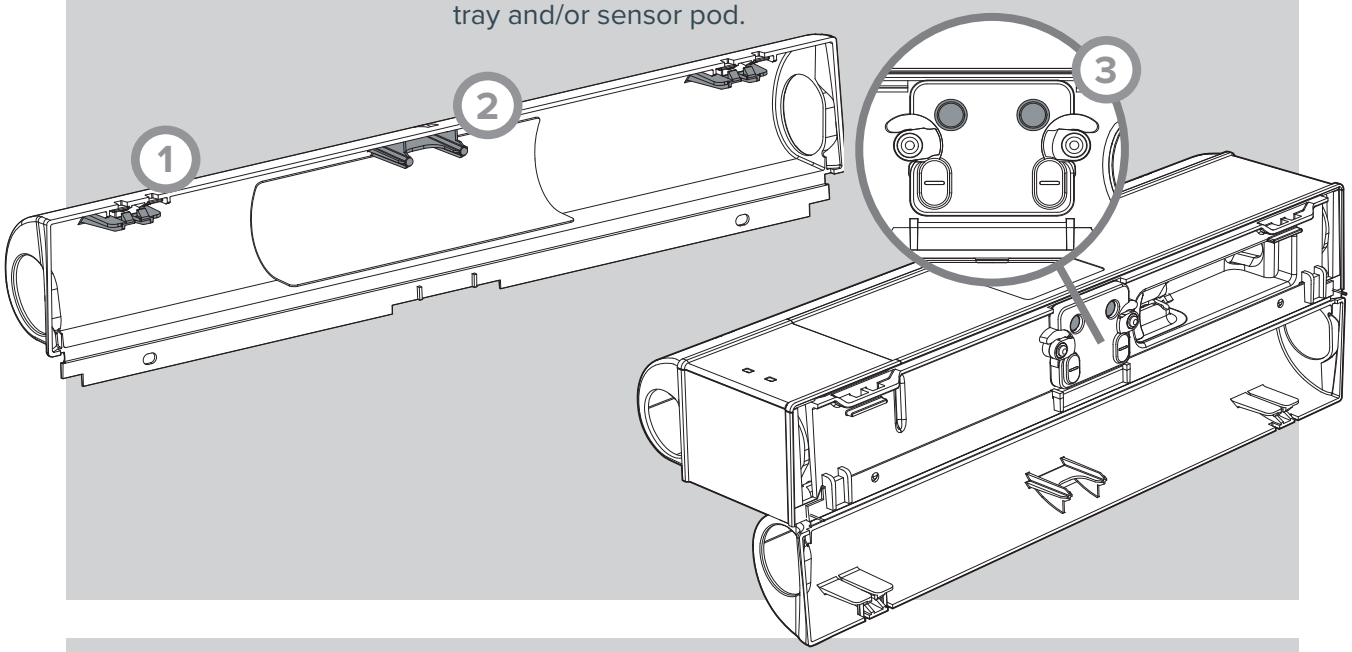

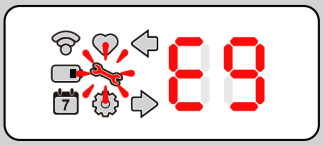

Sensor pod has failed. It must be replaced. The damage might have occurred due to moisture ingress, scratched/damaged lens, no feedback from one or both of the IR’s within the sensor pod.

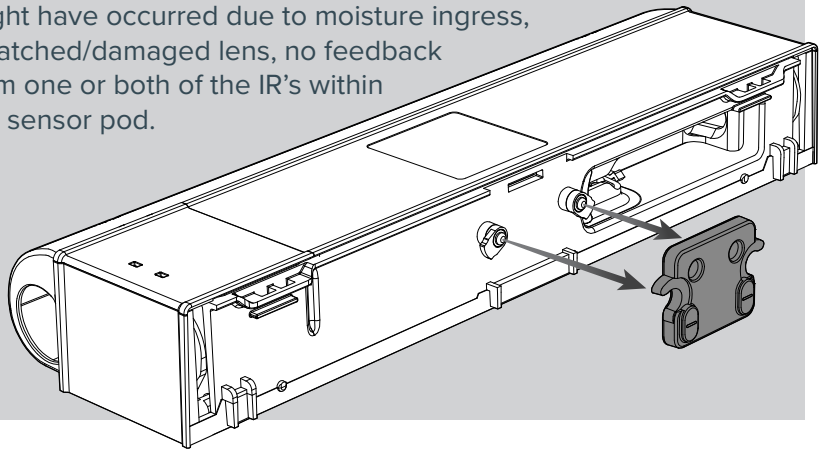

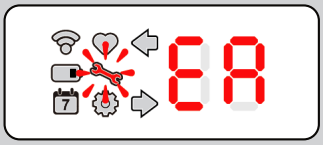

There was an issue with the trigger mechanism, this code will allow you to go into a tech mode that allows you to trigger the unit using the service key. Before doing this read and understand the section “Manual Trigger Testing” as it involves moving parts and potentially CO_2 escaping with the catch trays open.

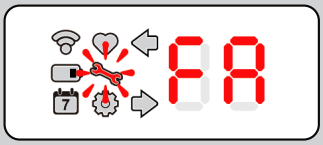

If a unit is detected as non functional such as continual “CL” on both sides or a Manual test shows the unit is still faulty, then you will see this error and the unit must be decommissioned from site and CO_2 canisters and battery removed.

Advanced Diagnostic Mode

Enter Advanced Diagnostic Mode

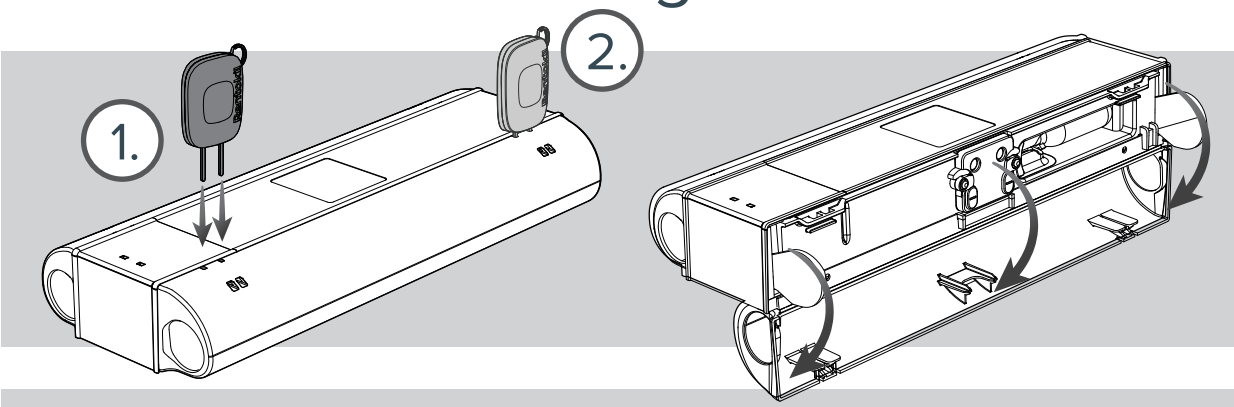

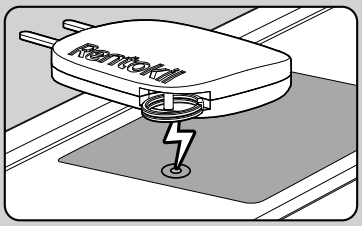

To enter Advanced Diagnostic Mode, you first need to be within Service Mode (page 17). Once in this mode open both trays then hold the magnet key to the units display for 30 seconds. Below are the different diagnostic information you can receive and activate.

1. LED Test

LED Test Mode

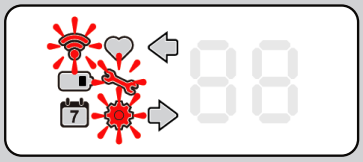

On entering LED Test Mode, Service Mode (Icon 🔧) and Configuration (Icon ⚙) flash, along with the Connect LED Identifier (Icon 📶) flashing red.

Tap 1

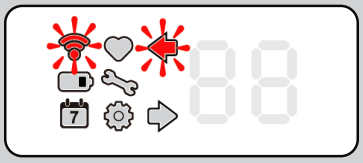

First tap in LED Test Mode. All icon and diget segments are turned off. Left arrow (Icon ⬅) and Connect LED Identifier (Icon 📶) flash.

Tap 2

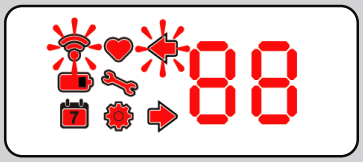

Second tap in LED Test Mode. All icon and diget segments are turned on. Right arrow (Icon ➡) and Connect LED Identifier (Icon 📶) flash.

Tap 3

Cycles Interface back to Tap 1 off LED Test Mode. At any point during these Taps, holding the service key in place for 3 seconds moves the interface to the next diagnostic mode; Motor Test.

2. Motor Test

Motor Test Mode

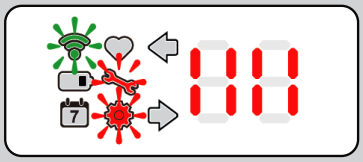

Eg: The trigger pins on both the LHS and RHS are armed.

On entering Motor Test Mode, Service Mode (Icon 🔧) and Configuration (Icon ⚙) flash, along with the Connect LED Identifier (Icon 📶) flashing green.

Trigger pin armed status will be displayed as a double bar on the appropriate side.

Warning: During this Motor Test the piercing piston will fire when in the armed position, regardless if the catch tray is in the opened or closed position. Therefore ensure you keep body parts away from the CO_2 canister cradle region.

Tap 1

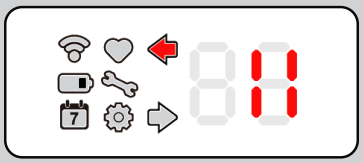

Eg: Left motor fired, double bar indicating armed pin on left side removed.

The left arrow (Icon ⬅) flashes and the motor on the left side is triggered. The trigger pin status is upaded on the display.

Tap 2

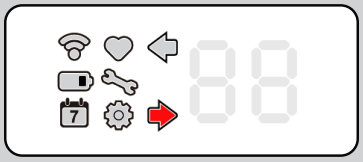

Eg: Right motor fired, double bar indicating armed pin on right side removed.

The right arrow (Icon ➡) flashes and the motor on the right side is triggered. The trigger pin status is upaded on the display.

Tap 3

Cycles Interface back to Tap 1 off Moror Test Mode. At any point during these Taps, holding the service key in place for 3 seconds moves the interface to the next diagnostic mode; Temperature Test.

3. Temperature Test

Temp Test Mode

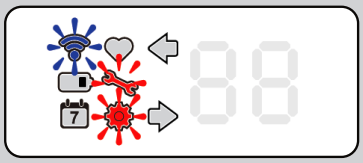

On entering Temperature Test Mode, Service Mode (Icon 🔧) and Configuration (Icon ⚙) flash, along with the Connect LED Identifier (Icon 📶) flashing blue.

Temperature is displayed in deg/C. If a negative temperature is displayed the digets flash at 1Hz.

Tap 1

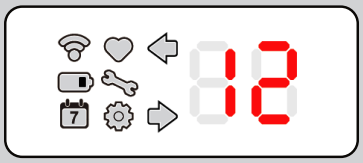

The internal temperature sensor reading is displayed.

Eg: The internal temperature of the unit is 12°C

Tap 2

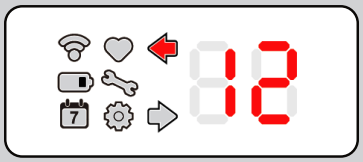

The left arrow (Icon ⬅) and the left temperature sensor reading is displayed.

Eg: The left temperature reading is 12°C

Tap 3

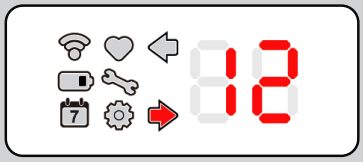

The right arrow (Icon ➡) and the right temperature sensor reading is displayed.

Eg: The right temperature reading is 12°C

Tap 4

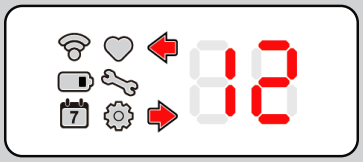

Both the right arrow (Icon ➡) and left arrow (Icon ⬅) illuminate and the microprocessor temperature sensor reading is displayed.

Eg: The microprocessor temperature is 12°C

Tap 5

Cycles Interface back to Tap 1 off Temperature Test Mode. At any point during these Taps, holding the service key in place for 3 seconds moves the interface to the next diagnostic mode; Accel Test.

4. Accel Test

Accel Test Mode

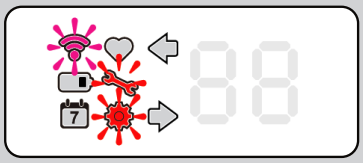

On entering Accel Test Mode, Service Mode (Icon 🔧) and Configuration (Icon ⚙) flash, along with the Connect LED Identifier (Icon 📶) flashing magenta.

Tap 1

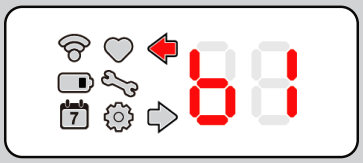

Eg: Alkaline battery used

The left arrow (Icon ⬅) lights up and the battery type is displayed.

Codes for battery type:
b1 = Alkaline
bF = Unknown

Tap 2

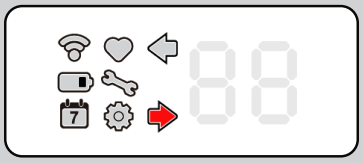

The right arrow (Icon ➡) lights up and the accelerometer triggers are displayed.

Tap 3

Cycles Interface back to Tap 1 off Accel Test Mode. At any point during these Taps, holding the service key in place for 3 seconds moves the interface to the next diagnostic mode; Side Pod Tests.

5. Side Pod Tests

Side Pod Test Mode

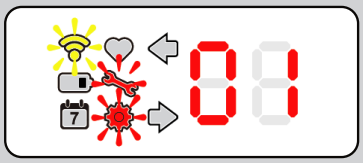

Eg: Configuration pod fitted on left side, IR pod fitted on right side.

On entering Side Pod Test Mode, Service Mode (Icon 🔧) and Configuration (Icon ⚙) flash, along with the Connect LED Identifier (Icon 📶) flashing yellow.

Didgets indicate Pod Type (sesnsor board):

Left pod type is displayed on left diget, and right pod type is displayed on right diget.

- 0 - Configuration Pod (Blank Pod)
- 1 - IR Pod
- E - Unknown
- F - No Pod Detected

Tap 1

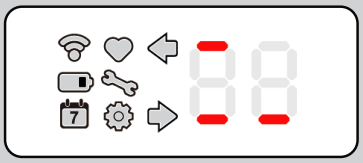

Eg: Both left pods sensors triggered, and right sensor in right pod

The top and bottom bars of the didgets are illuminated to indicate which sensors have been triggered.

- - Left pod, left sensor triggered
- - Left pod, right sensor triggered
- - Right pod, left sensor triggered
- - Right pod, right sensor triggered

Tap 2

Cycles Interface back to Side Pod Test Mode screen.

6. Exit Advanced Diagnostic Mode

To exit Advanced Diagnostic Mode the device must be powered cycled by removing and reconnecting the battery.

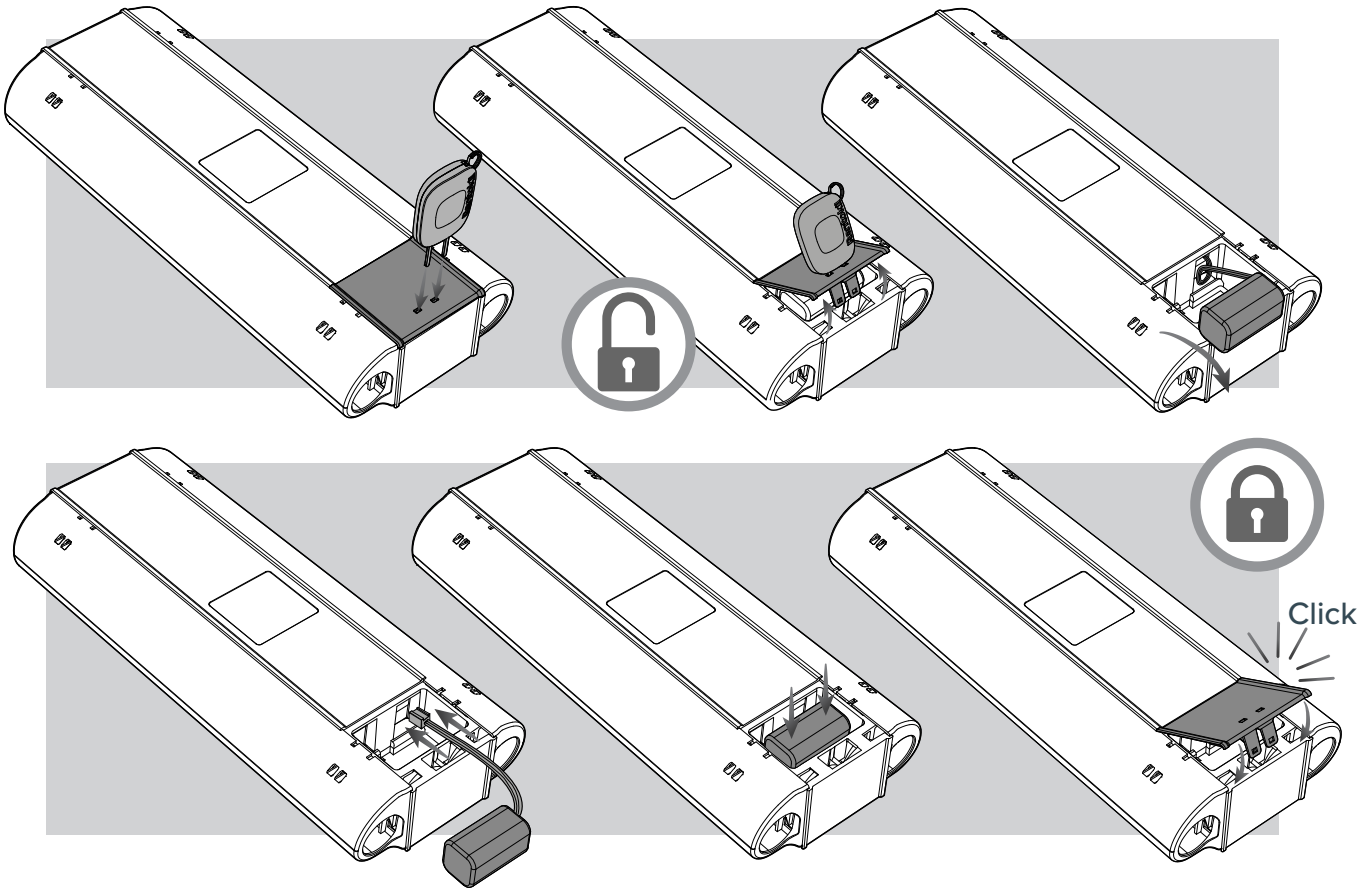

Further Information

Technical Details

Power Supply	
Battery Details	Use only Rentokil-Initial battery packs 6v output - 4 x AA cell battery pack -5°C to 50°C (23°F to 122°F) Operating Temperature range
Physical	
Dimensions (Single) Dimensions (Dual)	313mm x 49mm x 103mm (12.31” x 1.94” x 4.05”) 313mm x 49mm x 127mm (12.31” x 1.94” x 5.02”)
Weight (Single) Weight (Dual)	578g (20.39oz) [Excluding gas canister and battery] 561g (19.79oz) [Excluding gas canister and battery]
Material	ABS, POM and PP.
Operating Temperature Storage Temperature	-5°C to 50°C (23°F to 122°F) -20°C to 65°C (-4°F to 149°F)
Environmental Rating	IP65
CO_2 Gas Canister	Use only Rentokil-Initial approved 8g CO_2 gas canister.
Connect Only	
Interface	868-928MHz depending on local Approvals Rentokil Initial Propriatary Application Layer Protocol
Max Number of RADAR X per control panel	300

Product Code Summary

SKU	Product
304839	RADAR X Dual
304840	RADAR X Dual Connect

SKU	Accessories
304751	Pest Key
304838	RADAR X Catch Tray
304875	RADAR X Blanking Plate Kit
304876	Alkaline Battery Pack
304877	Retractable Lanyard

Approvals FCC PART 15 CLASS B, and CE compliant

FCC Warning Statement:

- This device complies with Part 15 of the FCC Rules.
  Operation is subject to the following two conditions:

(1) This device may not cause harmful interference, and

(2) This device must accept any interference received, including interference that may cause undesired operation.

- This equipment complies with FCC radiation exposure limits set forth for an uncontrolled environment. End users must follow the specific operating instructions for satisfying RF exposure compliance. This transmitter must not be co-located or operating in conjunction with any other antenna or transmitter. This equipment should be installed and operated with minimum distance 20cm between the radiator & your body.
- Changes or modifications not expressly approved by the party responsible for compliance could void the user's authority to operate the equipment.
- Note: This equipment has been tested and found to comply with the limits for a Class B digital device, pursuant to part 15 of the FCC Rules. These limits are designed to provide reasonable protection against harmful interference in a residential installation. This equipment generates uses and can radiate radio frequency energy and, if not installed and used in accordance with the instructions, may cause harmful interference to radio communications. However, there is no guarantee that interference will not occur in a particular installation. If this equipment does cause harmful interference to radio or television reception, which can be determined by turning the equipment off and on, the user is encouraged to try to correct the interference by one or more of the following measures:
  - Reorient or relocate the receiving antenna.
  - Increase the separation between the equipment and receiver.
  - Connect the equipment into an outlet on a circuit different from that to which the receiver is connected.
  - Consult the dealer or an experienced radio/TV technician for help.

ISED Warning Statement:

- This device complies with Industry Canada's licence-exempt RSSs. Operation is subject to the following two conditions:

(1) This device may not cause interference; and

(2) This device must accept any interference, including interference that may cause undesired operation of the device.

Industry Canada

- L'émetteur/récepteur exempt de licence contenu dans le présent appareil est conforme aux CNR d'Innovation, Sciences et Développement économique Canada applicables aux appareils radio exempts de licence. L'exploitation est autorisée aux deux conditions suivantes :

(1) L'appareil ne doit pas produire de brouillage;

(2) L'appareil doit accepter tout brouillage radioélectrique subi, même si le brouillage est susceptible d'en compromettre le fonctionnement.

- This equipment complies with IC radiation exposure limits set forth for an uncontrolled environment. This equipment should be installed and operated with minimum distance 20cm between the radiator & your body.
- Le dispositif est conforme aux limites d 'exposition au rayonnement ci fixées pour un environnement non contrôlé.La distance minimale entre le radiateur et votre corps doit être de 20 cm lors de l 'installation et du fonctionnement de cet appareil.

Rentokil

Why Choose Rentokil?

Rentokil is the global leader in pest control, bringing expert, reliable and professional service to commericial and residential customers in over 60 countries worldwide. As the experts in pest control, we work closely with you to:

Give you peace of mind.

With over 12,000 qualified technicians worldwide, we have extensive experience across a wide range of industry sectors. Our experts work proactively in partnership with you to minimise the threat of pest infestations in your business.

Safeguard your reputation

We take a dual approach, incorporating both preventative and responsive strategies to enhance protection for your business through a consistent, continuous pest control programme.

Neither the whole nor any part of the information described in this manual, nor the product therein described, may be adapted or reproduced in any form without prior written approval of Rentokil.

The product described in this manual is subject to continuous development and improvement and Rentokil reserve the right to alter the specification or design without prior notice. Rentokil cannot accept any liability for any loss or damage arising from the use of any information contained within this manual, or from any incorrect use of the product described herein. Rentokil can accept no liability whatsoever for any loss or damage arising from the product being serviced maintained or repaired by unauthorised personnel.

For more information about Rentokil visit www.rentokil.com
Registered Design - refer to www.rentokil-initial.com/ip

© 2020 RENTOKIL INITIAL PLC ALL RIGHTS RESERVED

2020 Rentokil Initial plc. Registered in England 5393279.
Registered office: Rentokil Initial 1927 plc, Compass House,
Manor Royal, Crawley, West Sussex, RH10 9PY
The names Rentokil® and Initial® are registered trademarks

GSD-160173 V0.7