Quick Start

User manual

① Diagram

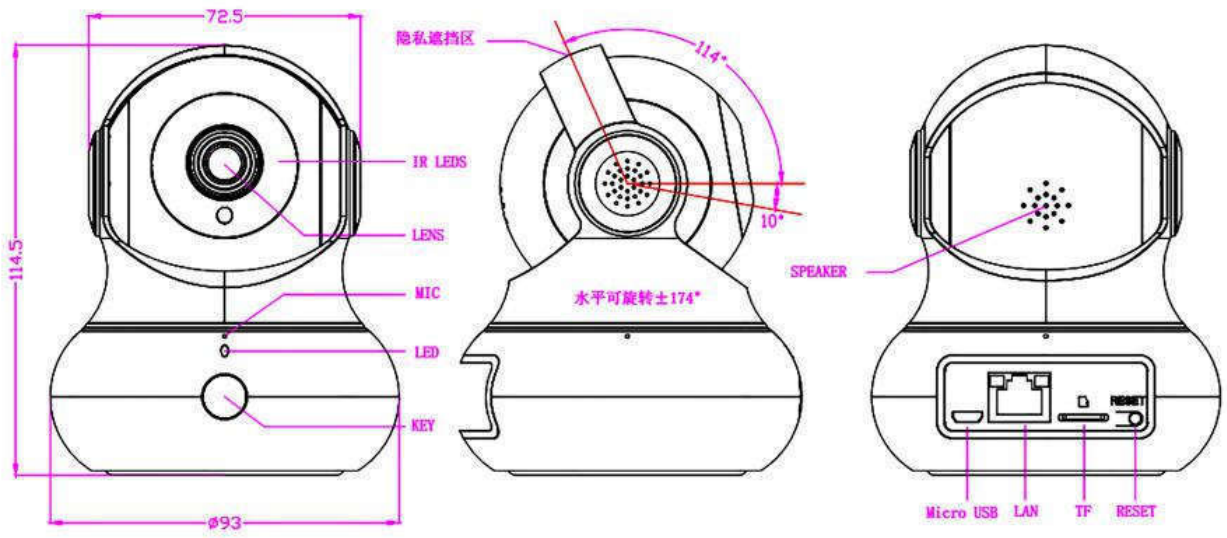

USB interface: 5V external power supply

Micro SD card slot: For local storage, up to 128G

② Scan to download APP

- Visit Apple APP Store or Google Play to download and install “Showmo” on your smart phone. Launch the APP and create a new account. Alternatively you may scan the following QR Code with your smart phone which will bring you to the site:

(Scan QR code and download)

③ Camera connection

①Smart wireless mode

- Get the camera connected with power and wait until red light blinks.
- Connected your Android or IOS device to your Wi-Fi and enter Wi-Fi password in APP as guided (5G Wi-Fi is not available for now), turn on the phone volume and get it close to the camera. When heard beeping sound from camera, please tab “next” and wait until

green light blink accompany with the voice “camera ready” which means connection is done.

- Name the camera and enjoy the video.
- ②Wire mode
- Get the camera connected with power and wait until red light blinks.
- camera ready,
- According to the prompts, connect the camera with the router by network, select the next step, search the device, and then click Add, and hear the sound “buzz”.Device will make a sound reminder “camera ready.”
- Name the camera and enjoy the video.
- (The phone and the camera are connected to the same network)

Q&A

① Why is the camera not connected online?

- Please check you have entered the right Wi-Fi password. Change password if there is any special symbol.
- Make sure DHCP of router is enabled.

② How can I playback recorded video on Micro SD card?

Move the cursor on the time line to the exact date and time, then can play the recorded video itself.

Instruction

①Indicating light

- Stable red Power is on
- Blink red Waiting for Wi-Fi password
- Stable green Waiting for connection to Internet
- Blink green Camera is working

②Working Temperature

The camera is fit for the environment between -10 ~ 40℃。

It's normal if you feel the camera a bit hot when in working condition.

③Camera reset

User will need to reset the camera when there is a requirement to:

- Change of Wi-Fi name or password.
- Change of Wi-Fi router
- Change of user to pair with the camera

*Ensure the camera is on working condition.

*Insert the end of a SIM eject tool into the Reset hole on the camera

and Press firmly and push the tool straight.

④Package list

- Camera
- Power adaptor & cable
- User's manual
- Product qualified card

- APP Illustration

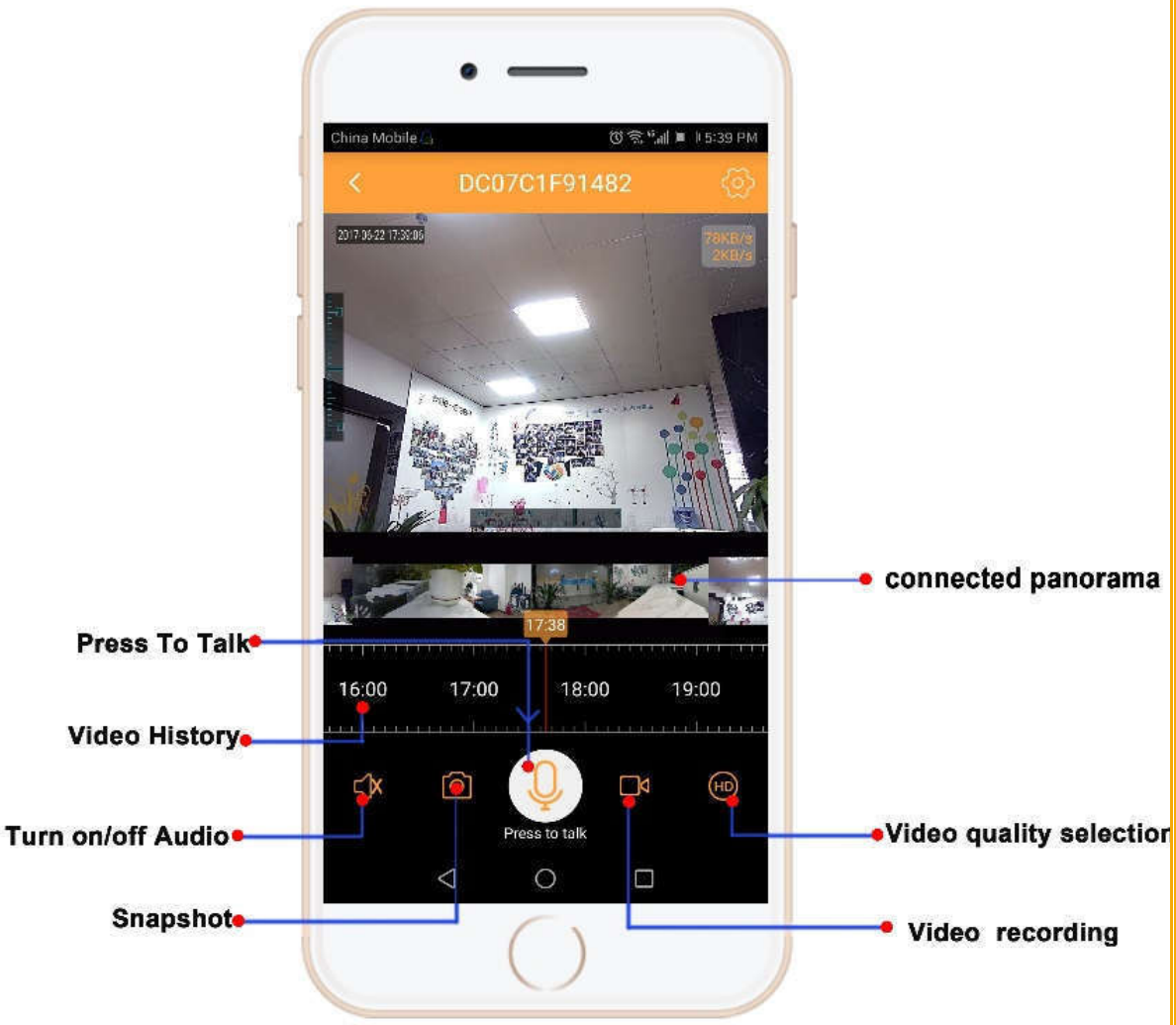

Warranty terms

- We are entitled to discontinue the warranty period if product has been serviced or tempered with by unauthorized personnel.

- We reserve the right to modify the contents of the product at any time without prior notice.
- Unless otherwise specified, this warranty only covers the defect in material, design and workmanship of the hardware components of the product as originally supplied. The warranty does not cover any software, consumable items, or accessories even if packaged or sold together with the product.

Note

- Please be sure the power is off when remove/insert micro SD card.
- Keep the product out of children's reach.
- Keep it away from direct sunlight, strong light or dust
- The camera is suitable for indoor environment; please keep it away from humidity such as around the humidifier.
- To make the connection well among router, camera and phone, please ensure the devices are all in the effective range if Wi-Fi.

FCC Warnning:

This equipment has been tested and found to comply with the limits for a Class B digital device, pursuant
to part 15 of the FCC Rules. These limits are designed to provide reasonable protection against harmful interference in a residential installation. This equipment generates, uses and can radiate radio frequency energy and, if not installed and used in accordance with the instructions, may cause harmful interference to radio communications. However, there is no guarantee that interference will not occur in a particular installation. If this equipment does cause harmful interference to radio or television reception, which can be determined by turning the equipment off and on, the user is encouraged to try to correct the interference by one or more of the following measures:

• Reorient or relocate the receiving antenna.
• Increase the separation between the equipment and receiver.
• Connect the equipment into an outlet on a circuit different from that to which the receiver is connected.
• Consult the dealer or an experienced radio/TV technician for help.

Caution: Any changes or modifications to this device not explicitly approved by manufacturer could void your authority to operate this equipment.

This device complies with part 15 of the FCC Rules. Operation is subject to the following two conditions:
(1)This device may not cause harmful interference, and (2) this device must accept any interference received, including interference that may cause undesired operation.

This equipment complies with FCC radiation exposure limits set forth for an uncontrolled environment. This equipment should be installed and operated with minimum distance 2 0cm between the radiator and your body.

This transmitter must not be co-located or operating in conjunction with any other antenna or transmitter.