SABINETEK

— Connecting The World With Sound —

Sabine-M700

SOLO KTV

無線藍牙K歌耳機

iOS &Android APP

● 包裝清單

Sabine-M700*1

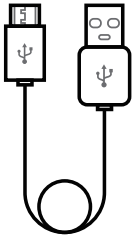

充電線*1

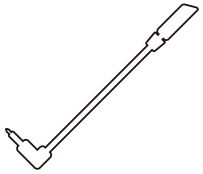

麥克風*1

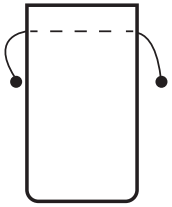

收納袋*1

使用手冊*1

● 設備說明

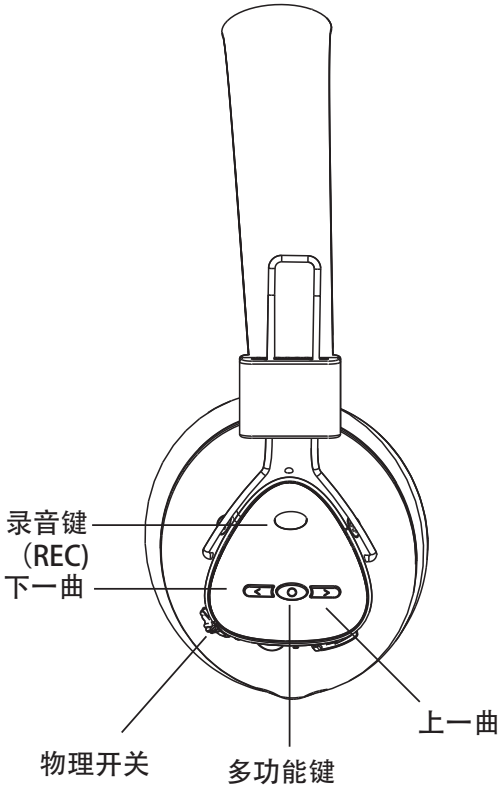

1、開／關機

a) 關機狀態下，將鎖定鍵移至ON的位置，長按『多功能鍵』三秒開機/LED藍燈持續閃爍等待藍牙配對；

b) 開機狀態下，長按『多功能鍵』三秒即可關機，狀態顯示LED燈關閉，語音提示：設備已關閉；

2、來電通話

a) 藍牙連接狀態下，單擊『多功能鍵』可接聽電話，長按2秒拒接來電；

b) 通話時，如有插撥，雙擊『多功能鍵』接聽插播電話，原通話保留；

c) 長按『多功能鍵』2秒，拒接插撥；

d) 單擊『多功能鍵』，掛斷原通話，接通插撥；

e) 雙擊『多功能鍵』，即可將已接起的插播保留，將原通話繼續；

3、音樂播放

a) 單擊『多功能鍵』可實現音樂播放、暫停；

b) 單擊『<』鍵播放下一首，單擊『>』鍵為上一首；

● 设备说明

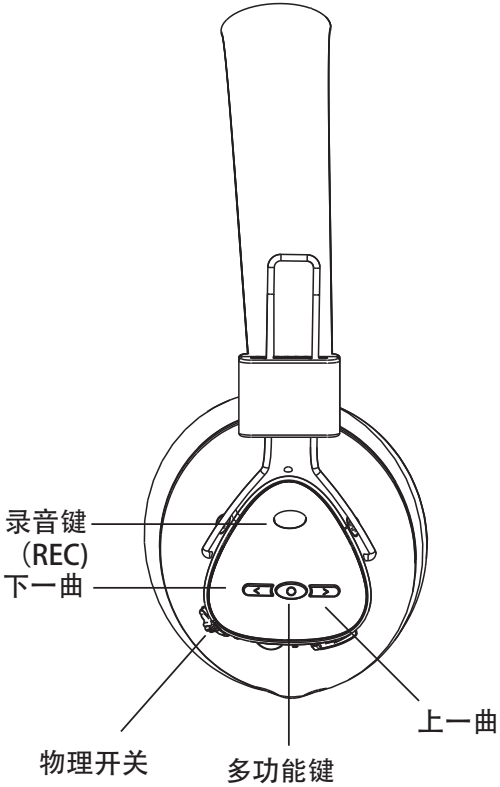

c） 長按『<』鍵可調大音量，長按『>』鍵為降低音量（未使用可插拔麥克風時）；

4、 一鍵錄音

a） 藍牙連接後，單擊『錄音』鍵，開始錄音，錄音狀態時的LED燈顯示方式可在APP中可設置(閃爍/呼吸/關閉)

b） 錄音時，單擊『錄音』鍵可結束錄音，進入待機狀態；LED藍燈每5秒亮一下；

c） 連接並在APP中打開錄影界面，單擊『錄音』鍵，開始錄影，錄影狀態時的LED燈顯示方式可在APP中可設置(閃爍/呼吸/關閉)

d） APP錄影時，單擊『錄音』鍵，結束錄影，進入待機狀態；LED藍燈每5秒亮一下；

5、原音切換

a） 原唱狀態，雙擊『多功能鍵』，轉為伴唱模式

b） 伴唱模式，雙擊『多功能鍵』，轉為原唱模式

6、音效切換

藍牙連接狀態下，長按『錄音』鍵2秒，可切換原音/女聲／男聲／娃娃音／電音／機器人聲

● 設備充電

1.請使用隨附的USB連接線進行充電。

2.充電過程中紅燈恆亮，電量充滿後指示燈滅。

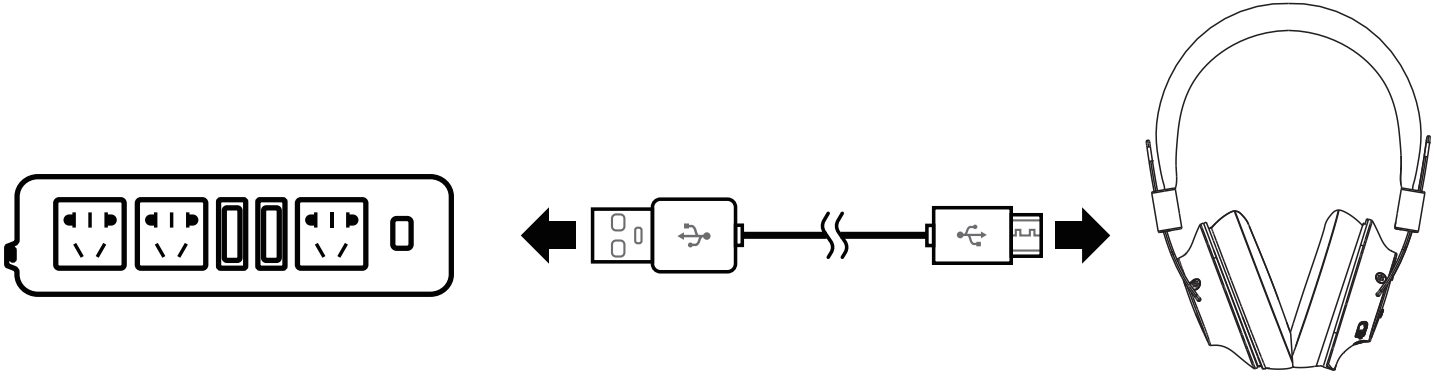

● 藍牙連接

1、初次配對

a) 將手機放在距離M700 約1公尺範圍內。

b) 在M700關機狀態下，長按『多功能鍵』3秒開機，LED呈藍燈閃爍狀態，耳機聽見語音提示【設備已啓動，等待連接，電量情況(高/中/低)】

c) 打開手機藍牙，同時在藍牙列表中搜尋『Sabine M700』，點擊即可建立藍牙配對，配對成功後，LED呈藍燈每5秒亮一次。

2、自動連接（適用於已配對設備）

關機狀態下，長按『多功能鍵』3秒開機，LED呈藍燈閃爍狀態，耳機聽見語音提示[“設備已啓動”+ 等待連接+電量情況(高/中/低) + 連接成功]，此時LED轉為藍燈每5秒亮一次。

3、如多次嘗試仍無法配對成功，請重啟手機藍牙或重啟M700後，依照以上步驟建立藍牙配對。

● 注意事項

1.請勿擅自拆開機殼;

2.請勿使整機過度受熱，如長時間曝露在陽光，火等類似的環境中;

3.電池不可自行更換，如需更換，請聯絡專業維修人員;

4.不得擅自改裝本設備，不得擅自外接天線或改用其他發射天線;

5.違反使用方式而造成的直接或間接損壞，需用戶自行承擔;

6.請使用柔軟的乾布清潔本設備;

7.本設備不防水，請勿置於水中;

8.如有任何設備的相關問題未能從手冊中找到解答，請與我們聯絡。

• NCC警語

依據低功率電波輻射性電機管理辦法

第十二條

※經型式認證合格之低功率射頻電機，非經許可，公司、商號或使用者均不得擅自變更頻率、加大功率或變更原設計之特性及功能。

第十四條

※低功率射頻電機之使用不得影響飛航安全及干擾合法通信；經發現有干擾現象時，應立即停用，並改善至無干擾時方得繼續使用。

-前項合法通信，指依電信法規定作業之無線電通信。

-低功率射頻電機須忍受合法通信或工業、科學及醫療用電波輻射性電機設備之干擾。

● 有毒物質清單

	有害物质					
	铅 (Pb)	汞 (Hg)	镉 (Cd)	六价铬 (Cr(VI))	多溴联苯 (PBB)	多溴二本醚 (PBDE)
内置线路板	X	O	O	O	O	O
外壳	X	O	O	O	O	O
USB	X	O	O	O	O	O

本表格依据SJ/T 11364 的规定编制。
O：表示该有害物质在该部件所有均质材料中的含量均在GB/T 26572 的规定限量要求下。
X：表示该有害物质至少在该部件的某一均质材料中的含量超出GB/T 26572 的规定限量要求。

● 保修卡

产品名称			
产品型号			
购机日期			
问题描述			
用户姓名			
用户地址			
联系电话			
维修人			

SABINETEK

— Connecting The World With Sound —

Sabine-M700

SOLO KTV

Wireless bluetooth karaoke headset

iOS &Android APP

● Packing List

Sabine-M700*1

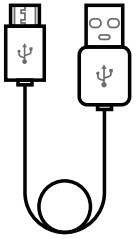

Charging Cable*1

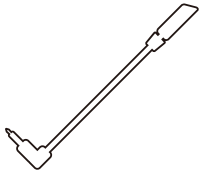

Microphone rod*1

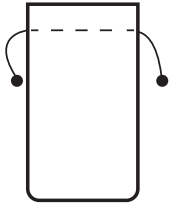

Pouch*1

Manual*1

● Specification

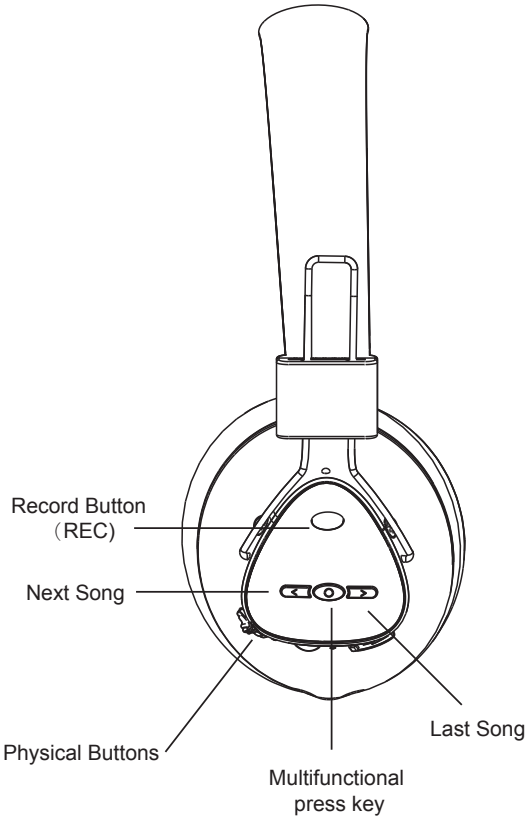

1、On/off

a) Before powering on headset, please make sure the slider switch is in the ON position. Press and hold the MFB button for three seconds until the blue led on for 1 sencond. Then the device will enter reconnecting/paring mode while blue led blinking.

b) Press the MFB for three seconds to power off device. While LED light is off with the voice” the device has been switched off “.

2 、 Call

a)Single click the MFB to answer incoming all and press&hold for 2 seconds to reject incoming call.

b) Double-click the "multi-function" button to answer the third party’s incoming call, and the other party’s call will be held;

c) Press&hold the MFB for 2 seconds to reject the third party incoming call.

d) Single click the MFB to hang up the current call and answer the third party incoming call.

● Specification

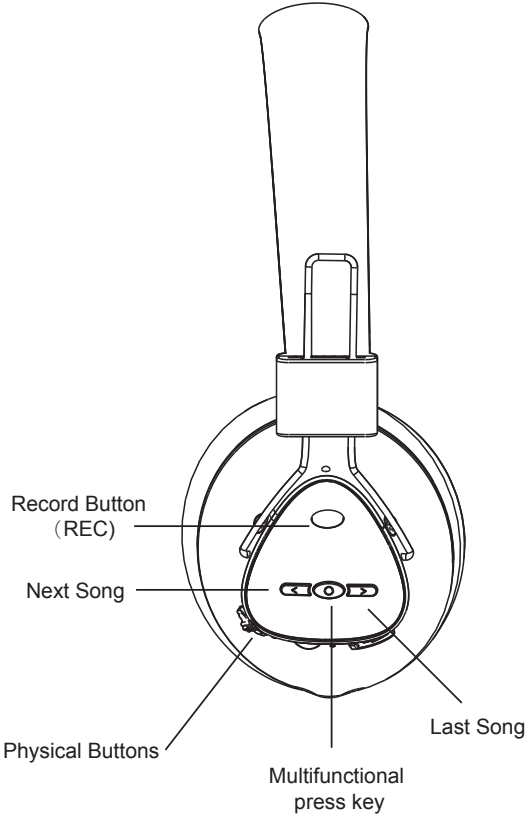

e) Double-click the "multi-function" button to hold the third party's call andreactive the former call..

3、Music play

a) Single press the MFB to play/pause music.

b) Press "<" for skip forward, and ">" for the skip backward;

c）Long press "<" for volume up, and ">" for volume down (only applicable to non-inserted external microphone accessory);

4、Record

a) Single click the RECORD to start audio recording with APP. LED flashing patterns flashing/breathing/off can be set in APP.

b) Single click the RECORD to stop audio recording. Headset will enter standby mode while the blue led flashing once every 5 seconds.

● Equipment specification

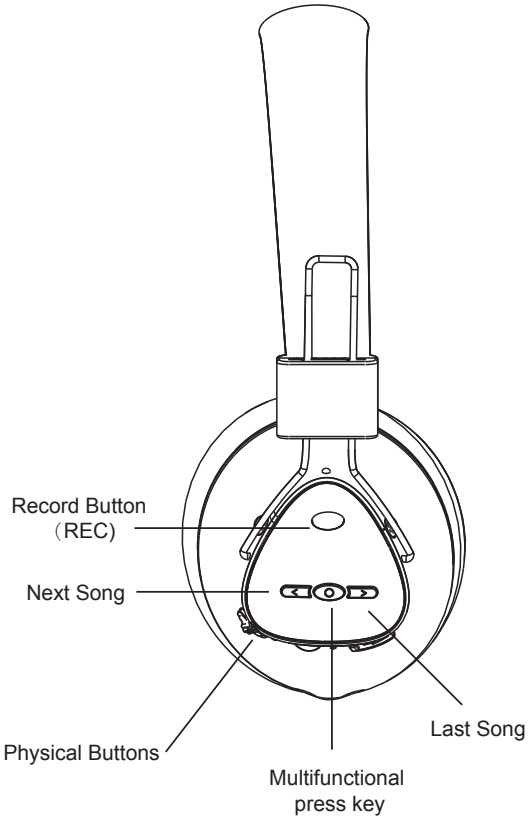

c) Single click the RECORD to start video recording with APP. LED flashing patterns flashing/breathing/off can be set in APP.

d) Single click the RECORD to stop recording. Headset will enter standby mode while the blue led flashing once every 5 seconds.

5、 Transfer(Original/ Backup)

a) Doule-click the MFB to enable/disable de-vocal mode (the original voice will be removed in music track).

b) Doule-click the MFB to enable/disable de-vocal mode (the original voice will be removed in music track).

6、 Change Sound Effect

Press&hold RECORD for 2 seconds to change the effects between original-effect/female-voice/male-voice/baby-voice/elec-voice/robot-voice.

Charging

1、Please charge with the Micro-USB cable;

2、While charging, the red LED light constantly. When charging is completed, the LED turns off.

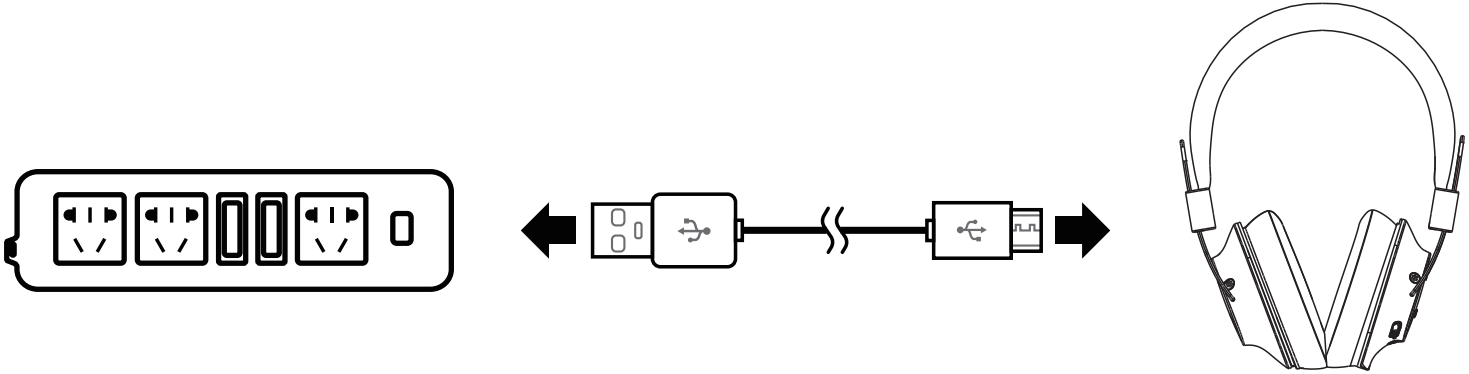

Bluetooth connection

1、First Pair

a) Put the mobile phone within 1 meter aound the M700.
b) Press the "multi-function" button for 3 seconds to turn on the device, and the blue light flashes with voice “Device started, please wait for connection, battery level high/medium/low *]
c) Open the mobile phone blutooth setting, search for "Sabine M700", and click it to connect. The blue led will flash once every 5 seconds if connected successfully.

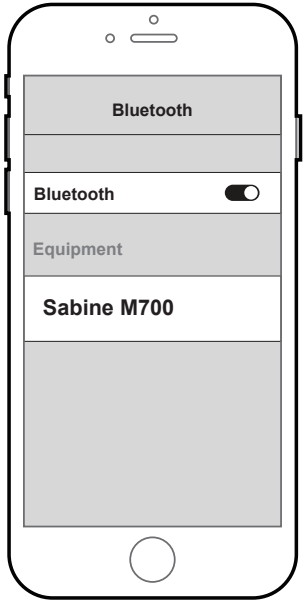

2、Automatic re-connection (applicable to paired devices)

Press the "multi-function" button for 3 seconds to turn on the device, and the blue light flashes with the voice ”power on, waiting for bluetooth connection , battery level condition.. connected], athen the blue light will flash ed every 5 seconds;

3、Please retry powering off/powering-on the heaset after paring failed. Paring steps are the same as above related instructions.

• Caution

1. Do not open the outer case.
2. Do not leave the device directly exposed to sunlight or in high temperature environment.
3. If battery needs to be replaced, please contact us for professional help.
4. The device shall not be modified without authorization. Do not use any external antenna or transmitting antenna instead without authorization.
5. Please use the device in accordance with the relevant national regulations of wireless device use.
6. Please use a soft dry cloth to clean the device.
7. Please make sure the device is away from water.
8. Any instruction about the device not listed in this manual, please contact us.

• FCC warning Message

Any Changes or modifications not expressly approved by the party responsible for compliance could void the user's authority to operate the equipment.

This device complies with part 15 of the FCC Rules. Operation is subject to the following two conditions: (1) This device may not cause harmful interference, and (2) this device must accept any interference received, including interference that may cause undesired operation.

Note: This equipment has been tested and found to comply with the limits for a Class B digital device, pursuant to part 15 of the FCC Rules. These limits are designed to provide reasonable protection against harmful interference in a residential installation. This equipment generates uses and can radiate radio frequency energy and, if not installed and used in accordance with the instructions, may cause harmful interference to radio communications. However,
there is no guarantee that interference will not occur in a particular installation. If this equipment does cause harmful interference to radio or television reception, which can be determined by turning the equipment off and on, the user is

• FCC warning Message

encouraged to try to correct the interference by one or more of the following measures:
—Reorient or relocate the receiving antenna.
—Increase the separation between the equipment and receiver.
—Connect the equipment into an outlet on a circuit different from that to which the receiver is connected.
—Consult the dealer or an experienced radio/TV technician for help.

Radiation Exposure Statement:
This equipment complies with FCC radiation exposure limits set forth for an uncontrolled environment. End users must follow the specific operating instructions for satisfying RF exposure compliance. The antenna(s) used for this transmitter must not be co-located or operating in conjunction with any other antenna or transmitter.

FCC ID: 2AK54-SABINE-M700

● List of toxic and hazardous substances

	Harmful substances					
	(Pb)	(Hg)	(Cd)	(Cr(VI))	(PBB)	(PBDE)
Built-in circuit board	X	O	O	O	O	O
Outer case	X	O	O	O	O	O
USB	X	O	O	O	O	O

This form is based on regulations SJ/T 11364.
O: Percentage of the hazardous substance in all homogeneous materials of the component is under the specified limit of GB/T 26572.
X: Percentage of the hazardous substance in at least one homogeneous material of the component is over the specified limit of GB/T 26572.

SABINETEK

— Connecting The World With Sound —

Sabine-M700

SOLO KTV

无线蓝牙K歌耳机

iOS &Android APP

● 包装清单

Sabine-M700*1

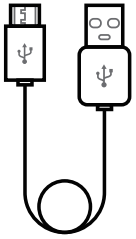

充电线*1

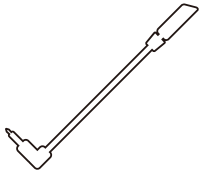

咪杆*1

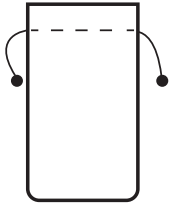

收纳袋*1

使用说明*1

● 设备说明

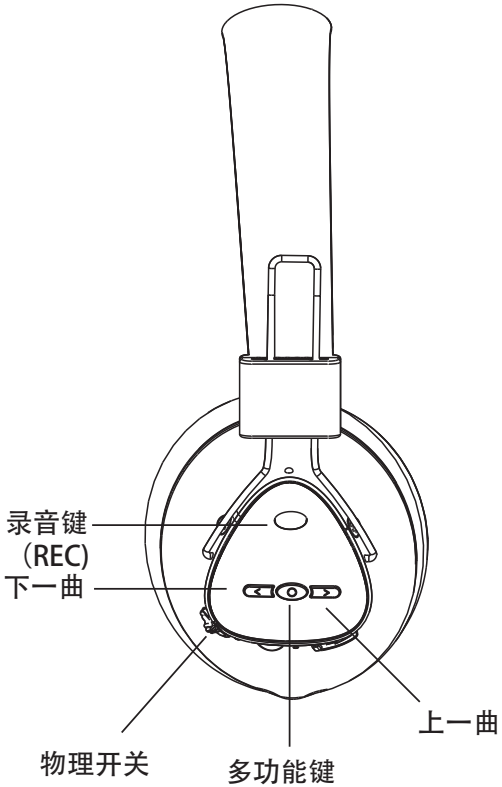

1、开／关机

a) 关机状态下，将物理开关处于ON的位置，长按『多功能键』三秒进入开机回连／搜索状态，蓝灯常亮一秒后，持续闪烁进入配对状态；

b) 开机状态下，长按『多功能键』三秒即可关机，LED灯关闭，语音提示：设备已关闭；

2、通话来电

a) 正常连接状态下，单击『多功能键』可接听电话，长按2秒拒接来电；

b) 通话中，如有第三方通话呼入，双击『多功能键』接听第三方呼入电话，此时另一方通话保持后台；

c) 长按『多功能键』2秒，则拒接第三方呼入电；

d) 单击『多功能键』，挂断原本的通话，接通第三方通话；

e) 双击『多功能键』，即可将当前通话的第三方通话退入后台，之前在后台的通话继续；

3、音乐播放

a) 单击『多功能键』可实现音乐播放、暂停；

● 设备说明

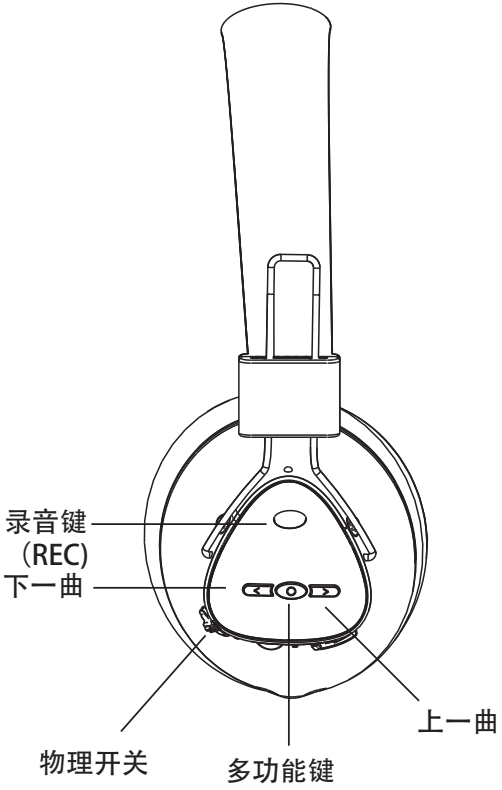

b) 单击『<』键为下一曲，单击『>』键为上一曲；

c) 长按『<』键可增大音量，长按『>』键为减小音量（仅适用于未插外接咪杆）；

4、一键录音

a) 连接后，单击『录音』键，开始录音，进入录制状态，LED灯在APP中可设置闪烁/呼吸/关闭；

b) 录音中，单击『录音』键，结束录音，进入待机状态；蓝灯每5秒亮一下；

c) 连接并在app中打开录像界面，单击『录音』键，开始录像，进入录制状态；APP中可设置LED灯模式(闪烁/呼吸/关闭)

d) app录像中，单击『录音』键，结束录像，进入待机状态】；蓝灯每5秒亮一下；

5、原音切换

a) 原唱状态，双击『多功能键』，转为伴唱模式；

b) 伴唱模式，双击『多功能键』，转为原唱模式

6、音效切换

连接状态下，长按『录音』键2秒，可实现原音/女声／男声／娃娃音／电音／机器人

● 设备充电

1.请使用随机附带的USB连接线进行充电。

2.充电过程中红灯常亮，电量充满后指示灯灭。

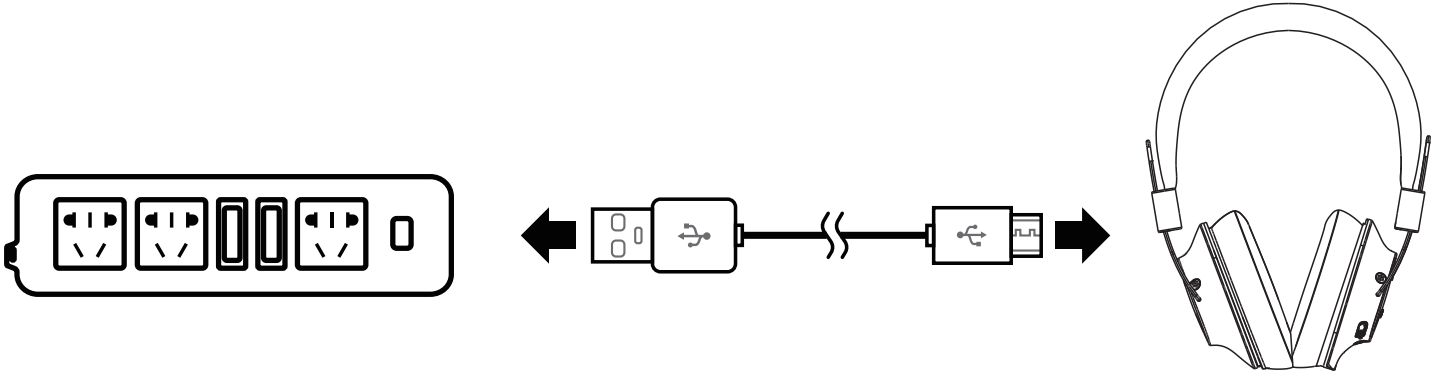

● 蓝牙连接

1、初次配对

a) 将手机放在距离M700 约1米范围内。

b) 在M700关机情况下，长按『多功能键』3秒开机，指示灯呈蓝灯闪烁状态，耳机中语音提示【设备已启动，等待连接，电量情况...】

c) 打开手机蓝牙，同时在蓝牙设备列表中搜索”Sabine M700”，点击即可建立蓝牙配对连接，配对成功后，指示灯呈蓝灯每5秒亮一次。

2、自动回连（适用于已配对设备）

关机情况下，长按『多功能键』3秒开机，指示灯呈蓝灯闪烁状态，耳机中语音提示['设备已启动'+ 等待连接+电量情况.. 连接成功]，此时指示灯转为蓝灯每5秒亮一次；

3、如多次尝试无法配对成功，请重启手机蓝牙或重启M700后，按以上步骤建立蓝牙配对。

● 注意事项

1.请勿擅自拆开机壳;

2.请勿将整机过度受热，如长时间暴露在阳光照射，火，或类似的环境中;

3.电池不可自行更换，如需更换，请联系专业维修人员;

4.不得擅自改装本设备，不得擅自外接天线或改用其他发射天线;

5.违反使用守则从而造成的直接或间接损坏，需用户自行承担;

6.请使用柔软的干布清洁本设备;

7.本设备不防水，请勿置于水中;

8.如您有任何关于本设备的疑问或问题，而本手册中未能涵盖，请与我们取得联系。

● 有毒物质清单

	有害物质					
	铅 (Pb)	汞 (Hg)	镉 (Cd)	六价铬 (Cr(VI))	多溴联苯 (PBB)	多溴二本醚 (PBDE)
内置线路板	X	O	O	O	O	O
外壳	X	O	O	O	O	O
USB	X	O	O	O	O	O

本表格依据SJ/T 11364 的规定编制。
O：表示该有害物质在该部件所有均质材料中的含量均在GB/T 26572 的规定限量要求下。
X：表示该有害物质至少在该部件的某一均质材料中的含量超出GB/T 26572 的规定限量要求。