Hub

Installation Guide

LATCH

Table of contents

Things you should know	**04**
Included in the box	**05**
Product details	**07**
Installation	**19**
Specifications	**30**
Requirements for compliance	**31**

Document number 770-00015
Revised on 08/26/2020

Things you should know

- For in-unit install, place the hub near the media panel.
- Configuration requires the iOS Manager App running on an iPhone 5S or newer.
- More resources, including the electronic version of this guide, can be found online at **support.latch.com**

Included in the Box

Mounting Hardware

- Pan-head screws
- Anchors
- Cable ties

Product

- Latch Hub
- Mounting Plate
- Wire Grommet
- Cover

Not Included in the Box

Mounting Tools

- #2 Phillips head screwdriver
- T25 Torx screwdriver
- 1/4” drill bit

Requirements for Device

- 64 bit iOS device
- Latest version of the Latch Manager App

Sold Separately

- Power adapter
- Power adapter extension
- RJ45 Cat5 patch cable

Product Details

Details and recommendations for power, wiring, and product specifications.

LED (Light) Definitions

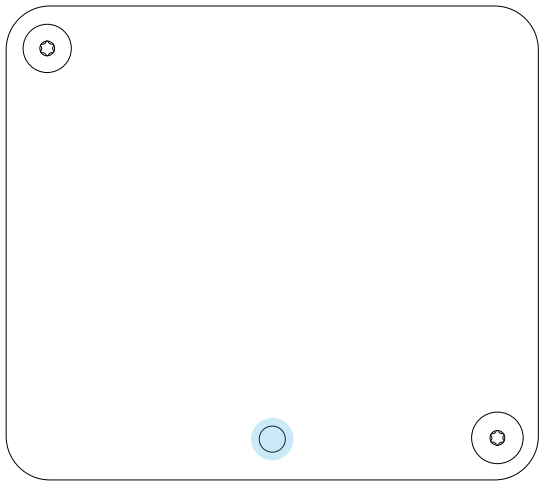

Solid White - Online and connected
Flashing White - Booting up, connecting, or pairing
Fast Flashing White - Firmware updating
Solid Red - Cannot connect to Latch servers
No Light - Power off or battery out

I/O Port Definitions

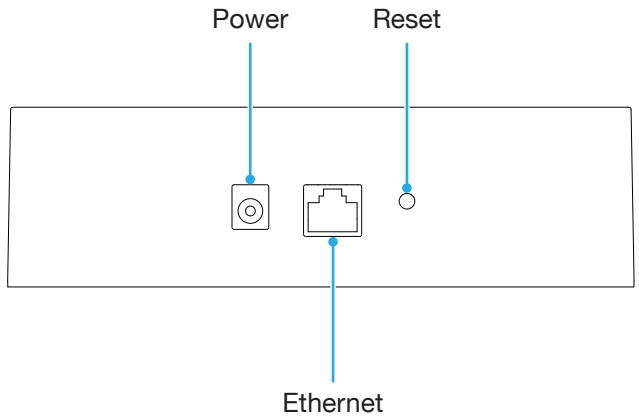

Wiring

DC Power Adapter

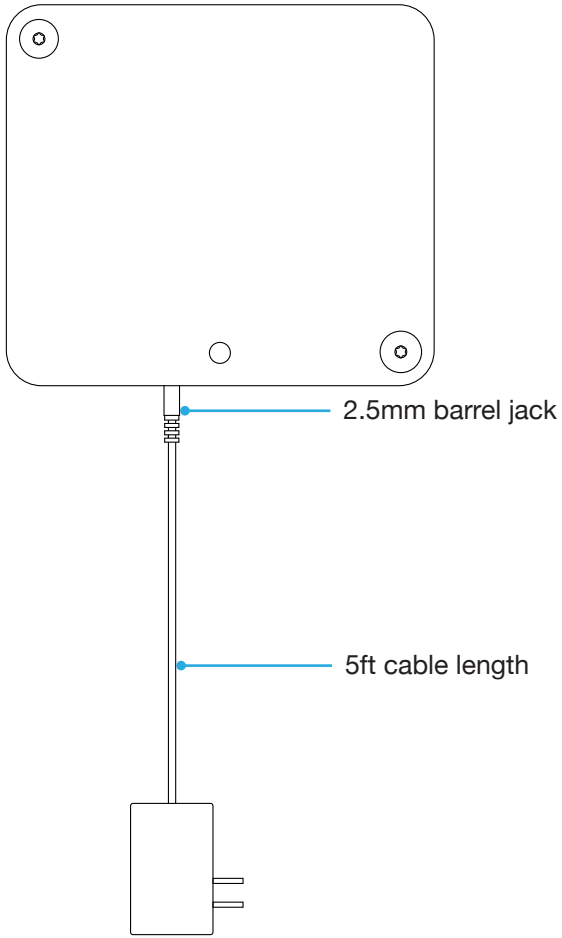

Requirements

Input voltage: 90 - 264 VAC
Input frequency: 47 - 63 Hz
Output voltage: 12 VDC +/- 5%
Max load: 2 AMPs
Min load: 0 AMPs
Load regulation: +/- 5%

Note: Do not splice DC power adapter

Wiring

Optional Cable Extension

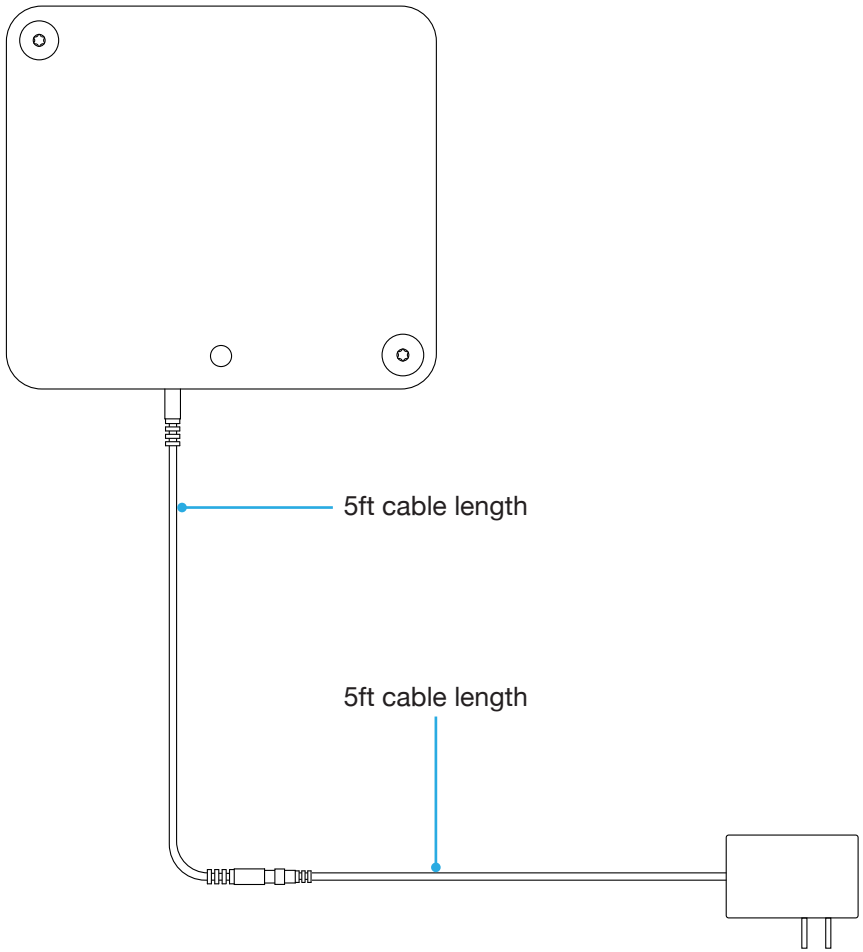

Sold Separately.

Note: If the DC power adapter (5ft) is not long enough for installation, an additional 5ft extension cable can be used.

Only one extension per hub is supported.

Wiring

Low Voltage 2 Wire Power

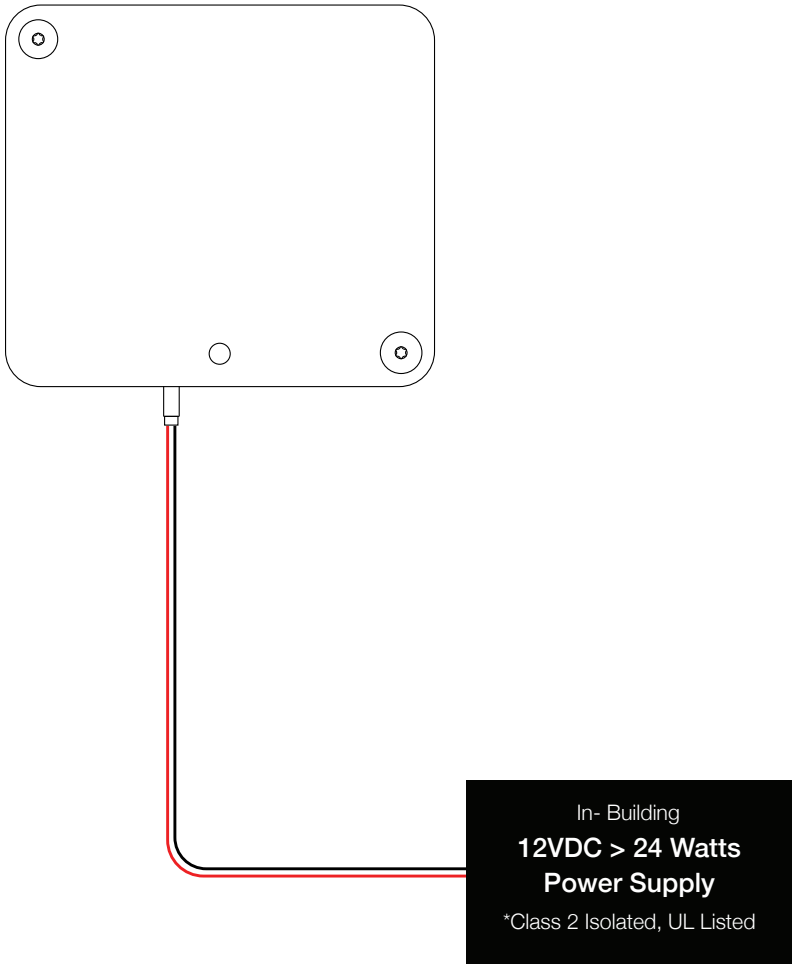

Minimum Wire Gauge Per Length of Wire Run

Distance	< 25ft	< 50ft	< 100ft	< 200ft
Power (12v)	24 AWG	22 AWG	18 AWG	14 AWG

Installation

Follow these steps to proceed with installation.

1.

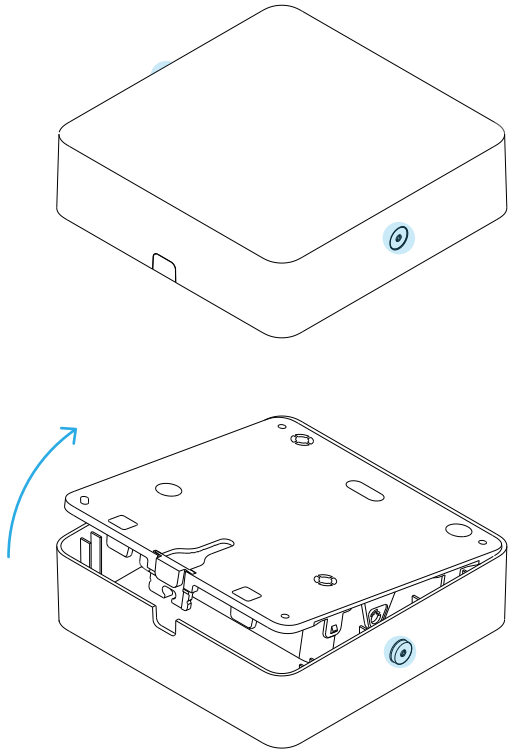

Rotate Torx screws in outer Cover counter-clockwise to unlock. Separate the outer Cover from the Mounting Plate using the opening on the underside.

Note: Do not use a power tool or excessive force on the Torx screws—over torquing could cause damage.

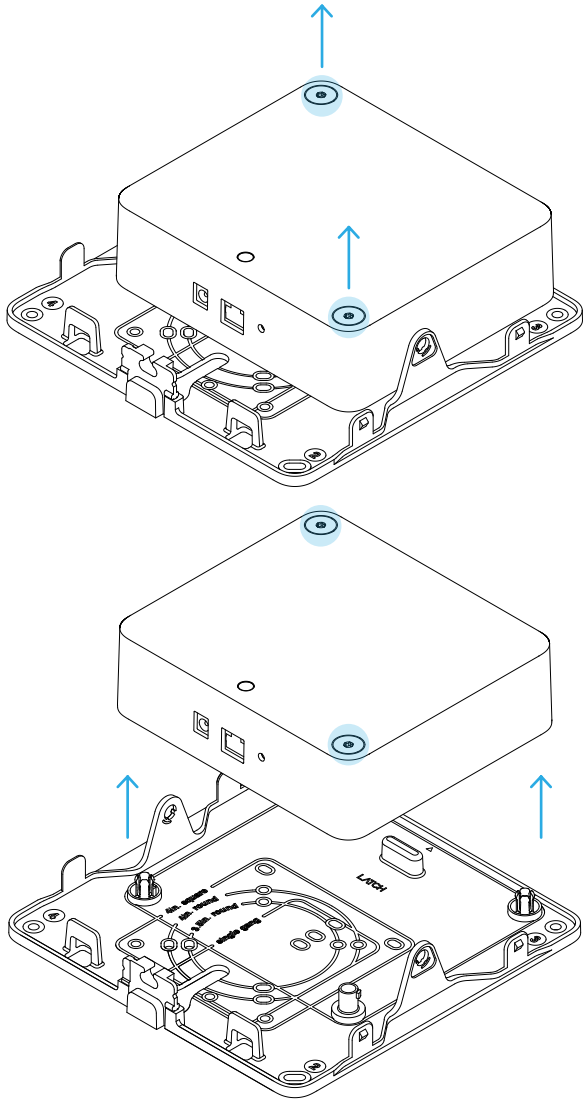

Rotate Torx screws in Hub counter-clockwise to unlock. Remove the Hub from the Mounting Plate.

2.

Attaching to junction box

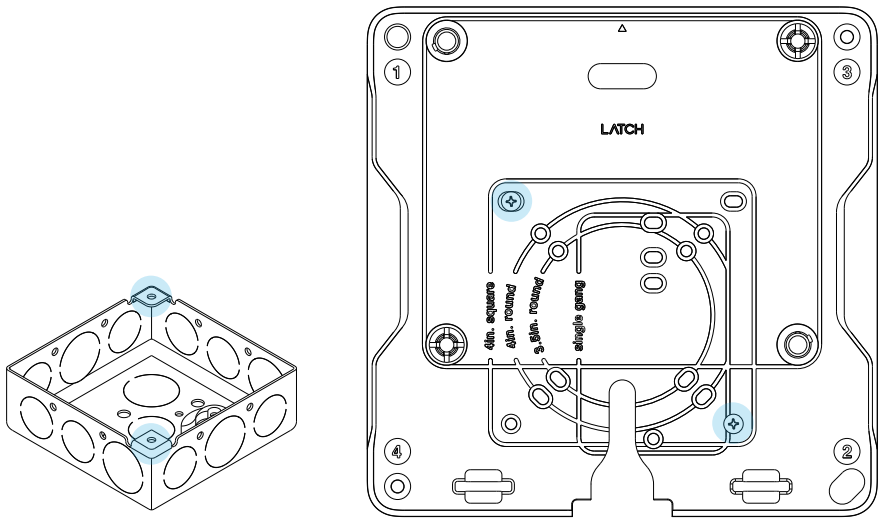

Install Mounting Plate. Attach to junction box or attach to wall or ceiling.

Attaching to wall or ceiling

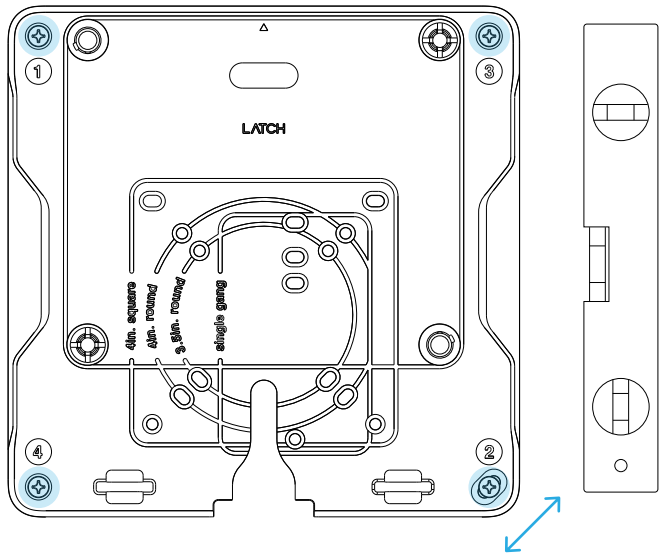

Note: Pass cables through opening before attaching Mounting Plate to junction box.

3.

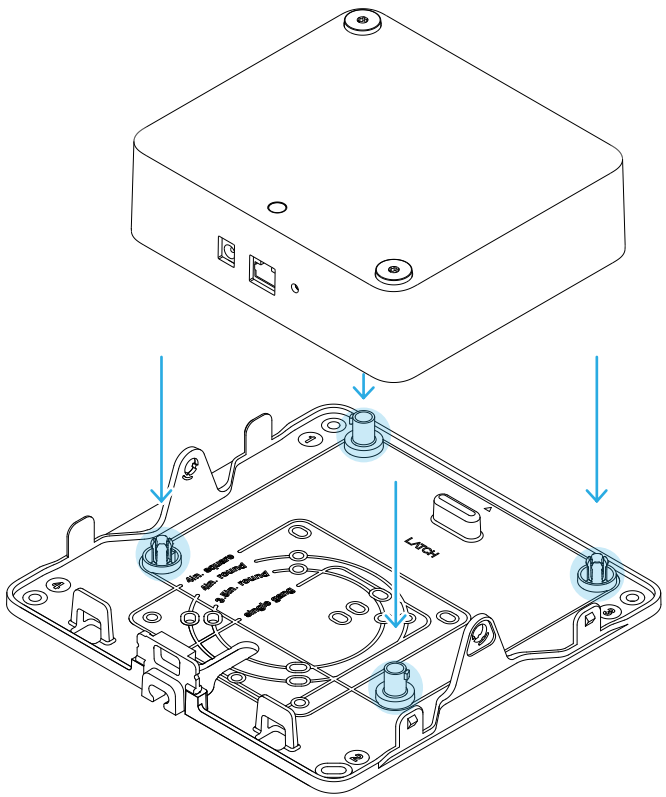

Attach Hub to Mounting Plate by aligning mating features.

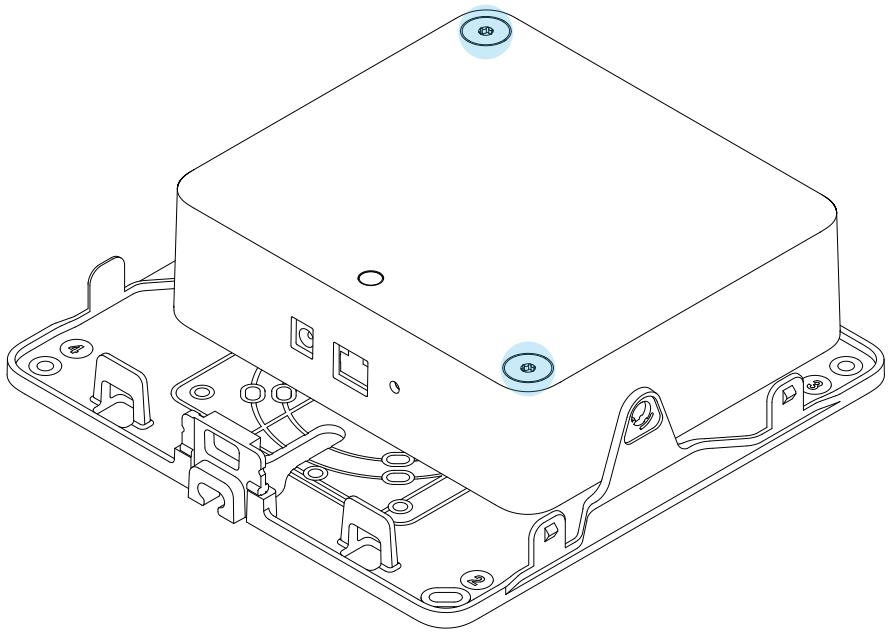

Rotate Torx screws in Hub clockwise to lock.

4.

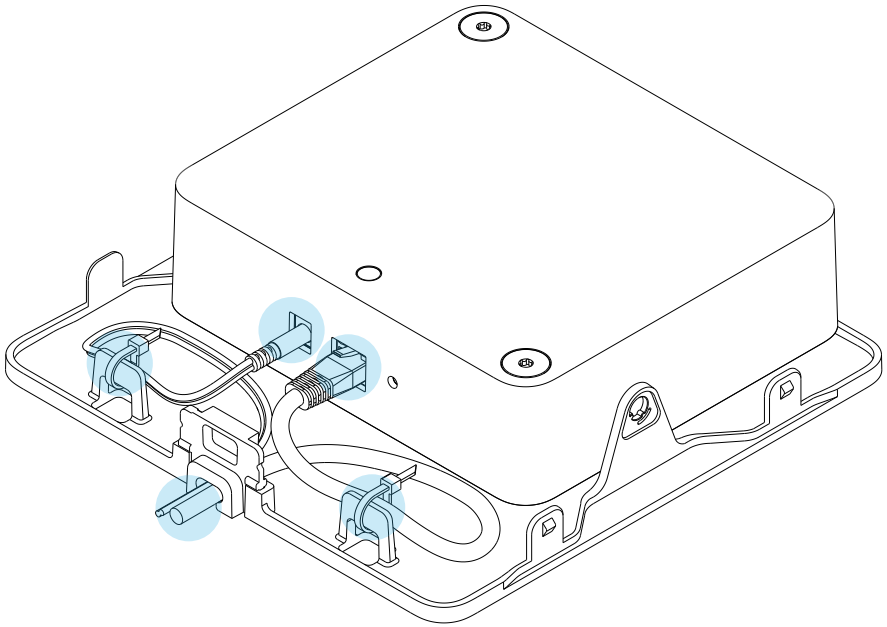

Plug in power and Ethernet cables. Use included cable ties to secure. Install Grommet.

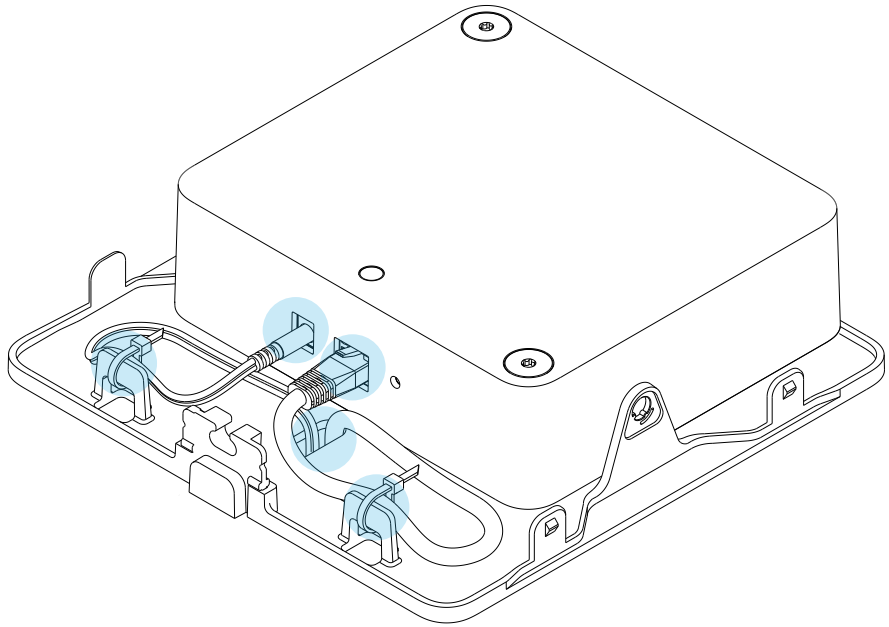

Junction box scenario.

5.

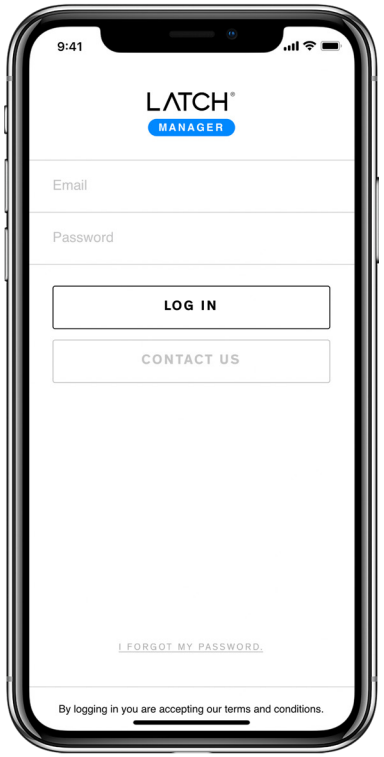

Use Latch Manager App to setup the device. Observe and monitor LED to verify set up success.

6.

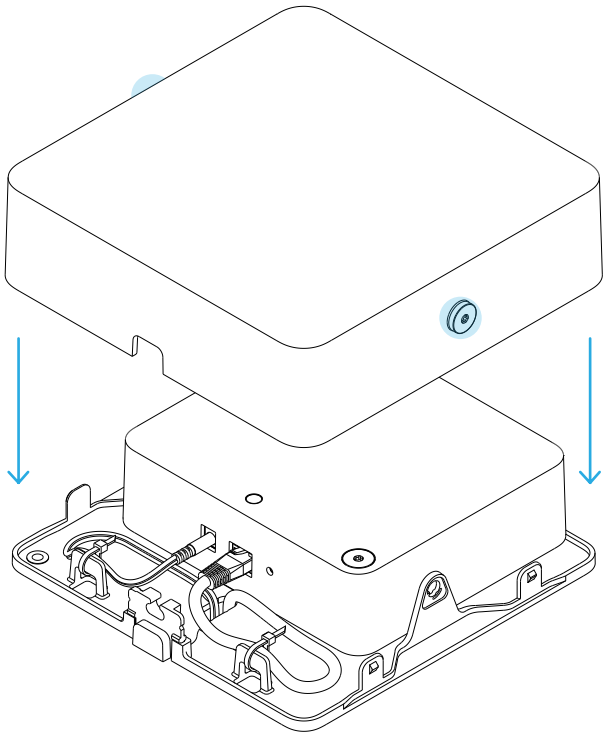

Install the outer Cover aligning with Mounting Plate and Grommet. Rotate Torx screws clockwise to lock and secure Cover.

Specifications

Dimensions
- Dimensions: 8 in. x 8 in. x 2.25 in.
- Weight: 3.3 lbs.

Network
- Ethernet: 10/100/1000
- Bluetooth: BLE 4.2
- Wi-Fi: 2.4Ghz / 5Ghz (Selectable) 802.11 a/b/g/n/ac
- Cellular: 4G LTE Cat 1
- Zigbee 3.0
- DHCP

Power
- Class 2 Isolated, UL Listed Power Supply
- 2 Wire Supply Voltage: 12VDC, 2A
- Operating Power: 20W-50W (Max: 4A @12VDC, 2A @24VDC; Min: 1.75A @ 12VDC, 1A @ 24VDC)
- DC input evaluated for UL294: 12V DC – 24V DC
- 4 Hour backup battery

Warranty
- 1 year limited warranty on electronic components
- 5 year limited warranty on mechanical components

Environmental
- Materials: impact resistant materials
- Temperature: Operating / Storage 0°C to 40°C (32°F to 104°F), Indoor Use Only
- Relative Humidity: 10% at 90%, non-condensing

Compliance

US
- FCC Part 15B / 15C / 15E / 22H / 24E
- UL 62368
- CEC/DOE

PTCRB

IEC62133 (Battery)

Canada
- IC RSS-210 / 139 / 133 / 132 / 130 / 102 (MPE)
- ICES-003
- NRCAN

Regulatory Compliance

Federal Communications Commission (FCC) Compliance Statement

This device complies with part 15 of the FCC Rules. Operation is subject to the following two conditions: (1) This device may not cause harmful interference, and (2) this device must accept any interference received, including interference that may cause undesired operation.

CAUTION: Changes or modifications not expressly approved by the manufacturer responsible for compliance could void the user's authority to operate the equipment.

NOTE: This equipment has been tested and found to comply with the limits for a Class B device, pursuant to part 15 of the FCC Rules. These limits are designed to provide reasonable protection against harmful interference in a residential installation. This equipment generates, uses and can radiate radio frequency energy and if not installed and used in accordance with the instructions, may cause harmful interference to radio communications. However, there is no guarantee that interference will not occur in a particular installation. If this equipment does cause harmful interference to radio or television reception, which can be determined by turning the equipment off and on, the user is encouraged to try to correct the interference by one or more of the following measures:

- Reorient or relocate the receiving antenna.
- Increase the separation between the equipment and receiver.
- Connect the equipment into an outlet on a circuit different from that to which the receiver is connected.
- Consult the dealer or an experienced radio / TV technician for help.

This transmitter must not be co-located or operating in conjunction with any other antenna or transmitter.

Operations in the 5.15-5.25GHz band are restricted to indoor usage only.

Note: The country code selection is for non-US models only and is not available to all US models. Per FCC regulation, all WiFi products marketed in US must be fixed to US operation channels only.

Radiation Exposure Statement

This equipment complies with FCC radiation exposure limits set forth for an uncontrolled environment. This equipment should be installed and operated with a minimum distance of 20cm between the radiator & your body.

Industry Canada (IC) Compliance Statement

This device complies with applicable Industry Canada RSSs. Operation is subject to the following two conditions: (1) This device may not cause interference, and (2) this device must accept any interference, including interference that may cause undesired operation of the device.

To satisfy RF exposure requirements, this device and its antenna must operate with a separation distance of at least 20 centimeters from all persons and must not be co-located or operating in conjunction with any other antenna or transmitter.

Le présent appareil est conforme aux CNR d'Industrie Canada applicables aux appareils radio exempts de licence. L'exploitation est autorisée aux deux conditions suivantes:

1. L'appareil ne doit pas produire de brouillage, et
2. L'appareil doit accepter tout brouillage radioélectrique subi, même si le brouillage est susceptible d'en compromettre le fonctionnement.

Pour remplir les conditions requise sur l'exposition des fréquences radios, cet appareil et les antennes doivent fonctionner avec une distance minimum de 20 centimètres avec toutes les personnes et ne doivent pas être placés ou fonctionner en conjonction avec tout autre antenne ou émetteur.

Troubleshooting

If the hub does not operate:

- Ensure the hub is powered with DC power. Do not use AC power.
- Ensure the input voltage if using 2 wire is 12 volts DC
- Further troubleshooting information is available on the support website at **support.latch.com**
-

Safety Instructions

- This product shall be installed and serviced by certified professionals only
- Locations and wiring methods shall be in accordance with the National Electrical Code, ANSI/NFPA 70
- Power Sources for Class 2 and Class 3 Circuits
- There are no replacement parts available for this product
- Correct wiring insulation should be used during installation to prevent the risk of electrical
- shock

Safety Instructions

Configuration & Commissioning instructions can be found in more detail in the Technical Certification Training as well as on the support website at **support.latch.com**

Service Information

Configuration & Commissioning instructions can be found in more detail in the Technical Certification Training as well as on the support website at **support.latch.com**

Applicable Products

This installation guide applies to products with the following designators on the label:

- Model: Hub

Warning

- The product may contain an internal lithium manganese dioxide, vanadium pentoxide, or alkaline battery or battery pack. There is risk of fire and burns if the battery pack is not handled properly.
- Do not expose to temperatures higher than 50° C (122° F).
- To reduce potential safety issues, only the battery provided with the product, a replacement battery provided by Latch, or a compatible battery purchased as an accessory from Latch should be used with the product.
- To reduce the risk of fire or burns, do not disassemble, crush, puncture, short external contacts, or dispose of in fire or water.
- Risk of explosion if battery is replaced by an incorrect type. Dispose of used batteries according to the instructions.
- Do not ingest battery, a Chemical Burn Hazard.
- Keep new and used batteries away from children.
- If the battery compartment does not close securely, stop using the product and keep it away from children.
- If you think batteries might have been swallowed or placed inside any part of the body, seek immediate medical attention.
- Leaving a battery in an extremely high temperature surrounding environment can result in an explosion or the leakage of flammable liquid or gas.
- A battery subjected to extremely low air pressure may result in an explosion or the leakage of flammable liquid or gas.

Exposure to Radio Frequency (RF) Energy

This device meets the government's requirements for exposure to radio waves. This device is designed and manufactured not to exceed the emission limits for exposure to radio frequency (RF) energy set by the Federal Communications Commission (FCC) and the Innovation, Science, and Economic Development (ISED) Canada.

LATCH